EN

gorenje

INSTRUCTION MANUAL
FOR FREEZER

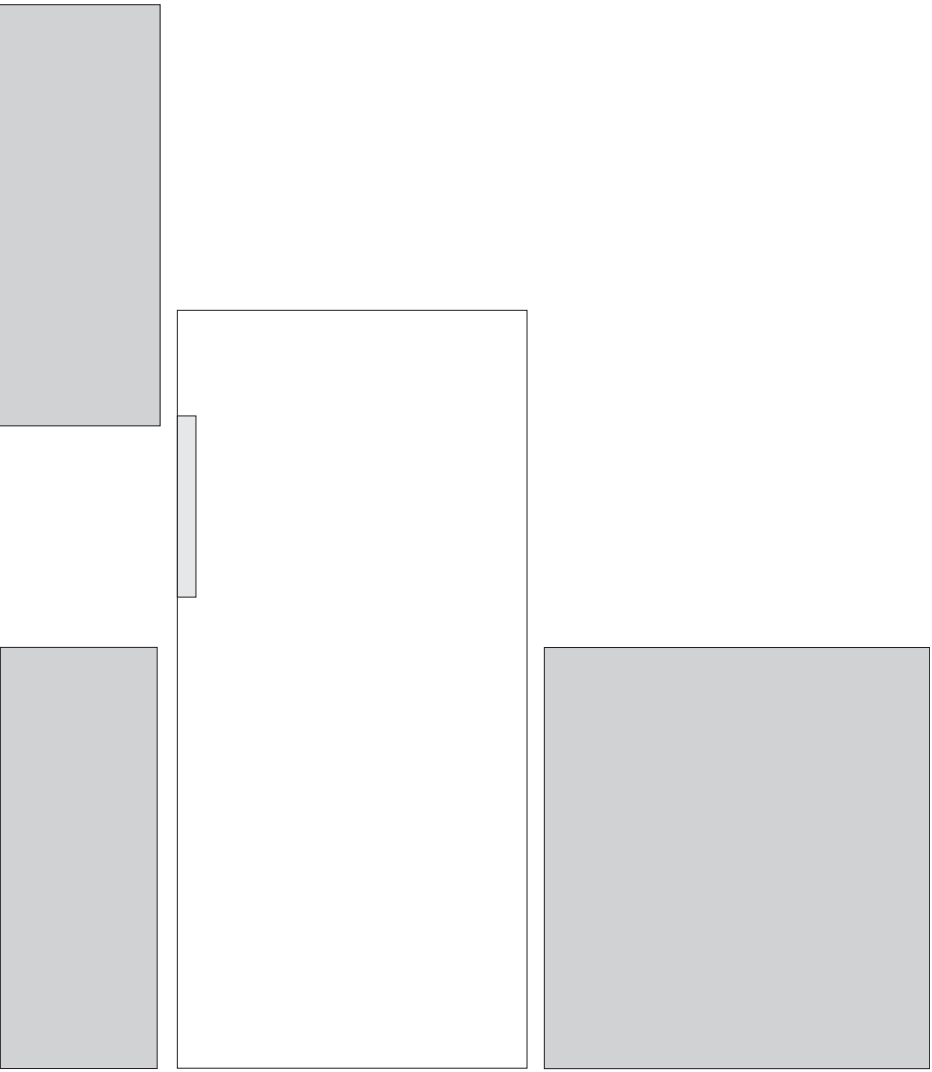

www.gorenje.com

We thank you for the confidence you have shown by purchasing our appliance which is designed to simplify your life. To make the use of the product easier, we have supplied detailed instructions for use, and installation instructions supplied on a separate sheet. The instructions should allow you to learn about your new appliance as quickly as possible.

We wish you find a lot of pleasure in its use.

The freezer is intended for freezing fresh food and for long-term storage of frozen food (up to one year, depending on the type of food).

Please visit our website where you can enter your appliance model number, indicated on the rating plate or the warranty sheet, to find detailed description of your appliance, tips on use, troubleshooting, service information, instructions for use etc.



http://www.gorenje.com



Important safety warning

CONTENTS

INTRODUCTION

4 IMPORTANT NOTES AND PRECAUTIONS

4 SAFETY AND WARNING INFORMATION

APPLIANCE DESCRIPTION

11 INSTALLING YOUR NEW APPLIANCE

13 APPLIANCE DESCRIPTION

14 CHANGING THE DOOR OPENING DIRECTION

16 OPERATING THE APPLIANCE

18 USING YOUR APPLIANCE

DEFROSTING AND CLEANING THE APPLIANCE

21 HELPFUL HINTS AND TIPS

22 CLEANING AND CARE

MISCELLANEOUS

24 TROUBLESHOOTING

26 DISPOSAL OF THE APPLIANCE

IMPORTANT NOTES AND PRECAUTIONS

SAFETY AND WARNING INFORMATION

For your safety and correct usage, before installing and first using the appliance, read this user manual carefully, including its hints and warnings. To avoid unnecessary mistakes and accidents, it is important to make sure that all people using the appliance are thoroughly familiar with its operation and safety features. Save these instructions and be sure that they remain with the appliance if it is moved or sold, so that anyone using it throughout its life, will be properly informed on its usage and safety notices.
For the safety of life and property, keep the precautions of these user's instructions as the manufacturer is not responsible for damages caused by omission.

Safety for children and others who are vulnerable people

According to EN standard

This appliance can be used by children aged from 8 years and above and persons with reduced physical, sensory or mental capabilities or lack of experience and knowledge if they have been given supervision or instruction concerning use of the appliance in a safe way and understand the hazards involved. Children shall not play with the appliance. Cleaning and user maintenance shall not be made by children without supervision.
Children aged from 3 to 8 years are allowed to load and unload refrigerating appliances.

According to IEC standard

This appliance is not intended for use by persons (including children) with reduced physical, sensory or mental capabilities, or lack of experience and knowledge, unless they have been given supervision or instruction concerning use of the appliance by a person responsible for their safety.

- Keep all packaging away from children as there is risk of suffocation.
- If you are discarding the appliance, pull the plug out of the socket, cut the connection cable (as close to the appliance as you can) and remove the door to prevent children playing from suffering an electric shock or from closing themselves inside it. I
- f this appliance, featuring a magnetic door seals, is to replace an older appliance having a spring lock (latch) on the door or lid, be sure to make the spring lock unusable before you discard the old appliance. This will prevent it from becoming a death trap for a child.



General safety

- WARNING —This appliance is intended to be used in household and similar applications such as

  -staff kitchen areas in shops, offices and other working environments;

  -farm houses and by clients in hotels, motels and other residential type environments;

  -bed and breakfast type environments;

  -catering and similar non-retail applications.

- WARNING — Do not store explosive substances such as aerosol cans with a flammable propellant in this appliance.
- WARNING — If the supply cord is damaged, it must be replaced by the manufacturer, its service agent or similarly qualified persons in order to avoid a hazard.
- WARNING — Keep ventilation openings, in the appliance enclosure or in the built-in structure, clear of obstruction.
- WARNING — Do not use mechanical devices or other means to accelerate the defrosting process, other than those recommended by the manufacturer.
- WARNING — Do not damage the refrigerant circuit.
- WARNING — Do not use electrical appliances inside the food storage compartments of the appliance, unless they are of the type recommended by the manufacturer.
- WARNING — The refrigerant and insulation blowing gas are flammable. When disposing of the appliance, do so only at an authorized waste disposal centre. Do not expose to flame. WARNING —When positioning the appliance, ensure the supply cord is not trapped or damaged.
- WARNING —Do not locate multiple portable socket-outlets or portable power supplies at the rear of the appliance.

Refrigerant

The refrigerant isobutene (R600a) is contained within the refrigerant circuit of the appliance, a natural gas with a high level of environmental compatibility, which is nevertheless flammable. During transportation and installation of the appliance, ensure that none of the components of the refrigerant circuit becomes damaged.
The refrigerant (R600a) is flammable.

- WARNING — Refrigerators contain refrigerant andgases in the insulation. Refrigerant and gases must be disposed of professionally as they may cause eye injuries or ignition. Ensure that tubing of the refrigerant circuit is not damage prior to proper disposal.

 **WARNING! Risk of fire/flammable materials.**

If the refrigerant circuit should be damaged:
- Avoid opening flames and sources of ignition.
- Thoroughly ventilate the room in which the appliance is situated.

It is dangerous to alter the specifications or modify this product in any way.
Any damage to the cord may cause a short circuit, fire, and/or electric shock.

 **Electrical safety**

- The power cord must not be lengthened.
- Make sure that the power plug is not crushed or damaged. A crushed or damaged power plug may overheat and cause a fire.
- Make sure that you can access the main plug of the appliance.
- Do not pull the main cable.
- If the power plug socket is loose, do not insert the power plug. There is a risk of electric shock or fire.

- You must not operate the appliance without the interior lighting lamp cover.
- The fridge is only applied with power supply of single phase alternating current of 220~240V/50Hz. If fluctuation of voltage in the district of user is so large

that the voltage exceeds the above scope, for safety sake, be sure to apply A.C. Automatic voltage regulator of more than 350W to the fridge. The fridge must employ a special power socket instead of common one with other electric appliances. Its plug must match the socket with ground wire.

Daily use

- Do not store flammable gass or liquids in the appliance, There is a risk of an explosion.
- Do not operate any electrical appliances in the appliance (e.g.electric ice cream makers,mixers etc.).
- When unplugging always pull the plug from the mains socket,do not pull on the cable.
- Do not place hot items near the plastic components of this appliance.
- Do not place food products directly against the air outlet on the rear wall.
- Store pre-packed frozen food in accordance with the frozen food manufacture's instructions.
- The appliances manufactures storage recommendations should be strictly adhered to.Refer to relrelevant instructions for storage.
- Do not place carbonated or fizzy drinks in the freeze compartment as it creates pressure on the container,which may cause it to explode,resulting in damage to the appliance.
- Frozen food can cause frost burns if consumed straight from the freezer compartment.
- Do not place the appliance in direct sunlight.
- Keep buring candles,lamps and other items with naked flames away from the appliance so that do not set the appliance on fire.
- The appliance is intended for keeping food stuff and/ or beverages in normal household as explained in this

instruction booklet The appliance is heavy.Care should be taken when moving it.

- Do not remove nor touch items from the freezer compartment if your hands are damp/wet,as this could cause skin abrasions or frost/freezer burns.
- Never use the base,drawers, doors etc. to stand on or as supports.
- Frozen food must not be refrozen once it has been thawed out.
- Do not consume ice popsicles or ice cubes straight from the freezer as this can cause freezer burn to the mouth and lips.
- To avoid items falling and causing injury or damage to the appliance, do not overload the door racks or put too much food in the crisper drawers.
- WARNING - Food needs to be packed into bags before it is put into the refrigerator. Liquids need to be stored in bottles or capped containers in order to avoid a spill, as the design structure of the product is not easy to clean.

caution!

Care and cleaning

- Before maintenance, switch off the appliance and disconnect the mains plug from the mains socket.
- Do not clean the appliance with metal objects, steam cleaner, ethereal oils, organic solvents or abrasive cleansers.
- Do not use sharp objects to remove frost from the appliance. Use a plastic scraper.

Installation Important!

- For electrical connection carefully, follow the instructions given in this manual.
- Unpack the appliance and check if there are damages on it. Do not connect the appliance if it is damaged. Report possible damages immediately to the place you bought it. In this case retain packing.
- It is advisable to wait at least four hours before connecting the appliance to allow the oil to flow back in the compressor.
- Adequate air circulation should be around the appliance, lacking this leads to overheating. To achieve sufficient ventilation, follow the instructions relevant to installation. Wherever possible the back of the product should not be too close to a wall to avoid touching or catching warm parts (compressor, condenser) to prevent the risk of a fire, follow the instructions relevant to installation.
- The appliance must not be locate close to radiators or cookers.
- Make sure that the mains plug is accessible after the installation of the appliance

Service

- Any electrical work required to do the servicing of the appliance should be carried out by qualified electrician or competent person.
- This product must be serviced by an authorized Service Center, and only genuine spare parts must be used.
  1) If the appliance is Frost Free.
  2) If the appliance contains freezer compartment.

INSTALLING YOUR NEW APPLIANCE

- Before using the appliance for the first time, you should review the following tips.

Ventilation of appliance

In order to improve efficiency of the cooling system and save energy, it is necessary to maintain good ventilation around the appliance for the dissipation of heat. For this reason, sufficient clear space should be available around the refrigerator.
Suggest: It is advisable for there to be 50-70 mm of space form the back to the wall, at least 100 mm form its top, at least 100 mm form its side to the wall and a clear space upfront to allow the doors to open 160°.
Please see the following diagrams

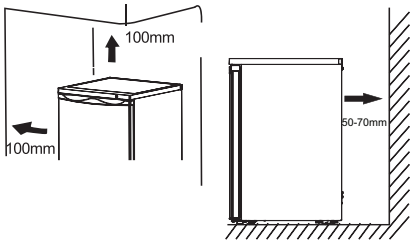

Note:

- This appliance performs well in the climate class from N to ST.It may not work properly if being left at a temperature above or below the indicated range for a long period.

Class	Temperature
SN	from +10 °C to +32 °C
N	from +16 °C to +32 °C
ST	from +16 °C to +38 °C
T	from +16 °C to +43 °C

- Stand you appliance in a dry place to avoid damage moisure.
- Keep the appliance out of direct sunlight, rain or frost. Stand the appliance away from heat sources such as stoves, fires or heaters.

Leveling of appliance
The appliance should be level in order to eliminate vibration. To make the appliance level, it should be upright and both adjusters should be firmly contacted with the floor. You can also adjust the level by screwing out the appropriate level adjuster at the front (use your fingers or a suitable spanner).

Electrical connection
Caution! Any electrical work required to install this appliance should be carried out by qualified or competent personnel.
Warning! This appliance must be earthed. The manufacture declines any liability should these safety measures not be observe.

APPLIANCE DESCRIPTION

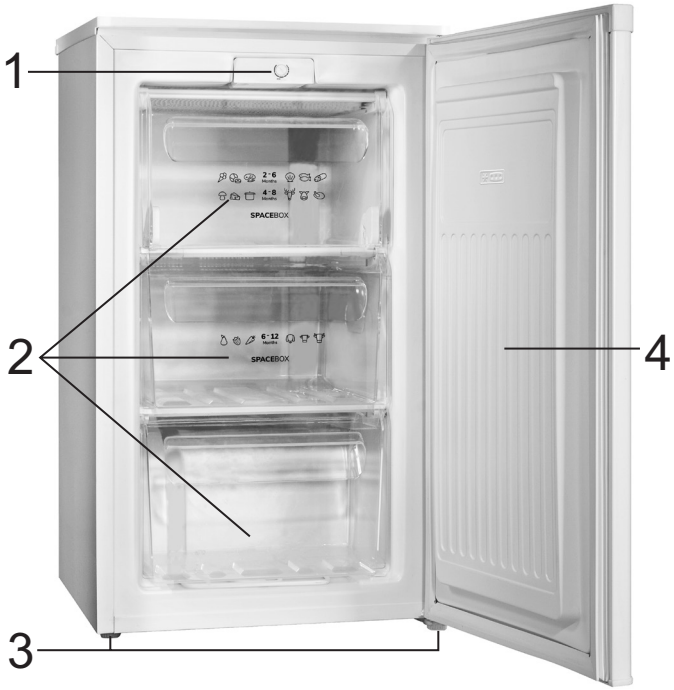

1. Control unit
2. Drawers
3. Adjustable feet
4. Door

CHANGING THE DOOR OPENING DIRECTION

- The side at which the door opens can be changed from the right side (as supplied) to the left side (as supplied) to the left side, if the installation site requires.

Tools you will need:
1. 8 mm socket driver



2. cross-shaped screwdriver



3. Putty knife or thin blade screwdriver



Before you start lay the refrigerator on it`s back in order to gain access to the base, you should rest it on soft foam packaging or similar material to avoid damaging the cooling pipes at the rear of the refrigerator.

1. Remove the upper hinge cap (7).
2. Remove the two screws blot (6) that connect the upper hinge (5) on the right side of the cabinet top.
3. Carefully lift the door and place it on a padded surface to prevent scratching.
4. Remove the plug (9) and transfer it to the uncovered hole on the right side of the unit. Be sure to press the button firmly into the hole.
5. Remove the two screws (7) that hold the lower hinge (2) on the right side of the unit.
6. Remove the screw-type leveling front leg (4) and transfer it to the right side as shown in the adjacent figure.
7. Set the door into it new place making sure the pin enters the bushing at the lower frame section (hole).
8. Secure the upper hinge (5) previously removed in step 3 on the left side of the unit. Make sure the pin enters the bushing on the upper frame section (hole).
9. Loosely secure the lower left hinge (2) and do not tighten the bolts until the door is in the closed position and leveled.
10. Insert the plug (9) on the uncovered holes (right side).
11. Replace the upper hinge cap (7).

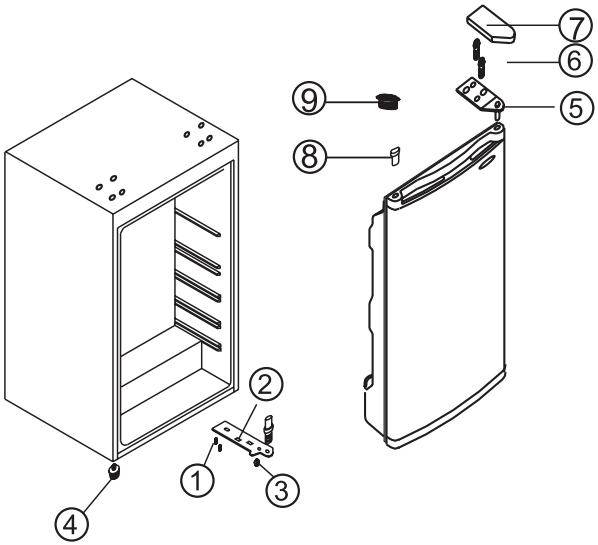

1. Screw
2. Low hinge
3. Adjustable low foot
4. Adjustable high foot
5. Upper hinge
6. Screw bolt
7. Upper hinge cap
8. Shaft sleeve
9. Plug

OPERATING THE APPLIANCE

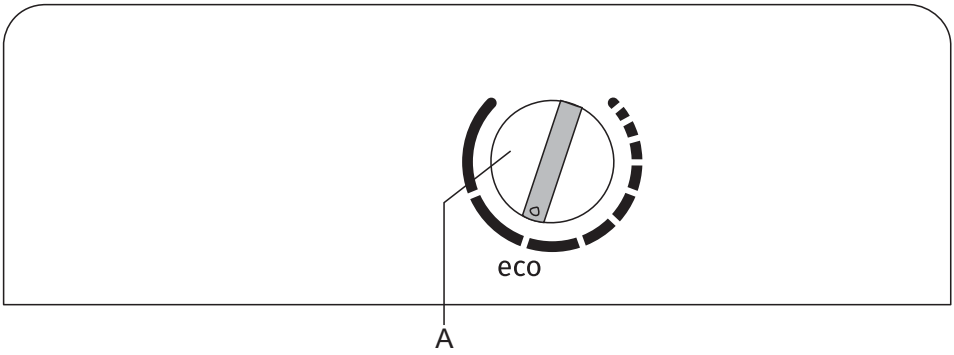

A Temperature setting knob

SWITCHING THE APPLIANCE ON

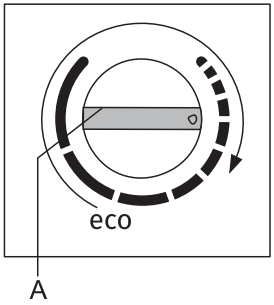

To switch on: rotate the **A** dial clockwise.

ADJUSTING THE TEMPERATURE

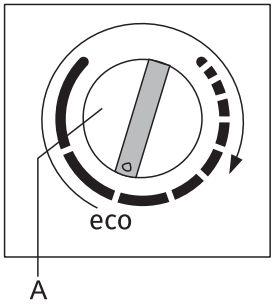

- To set the desired temperature, rotate the **A** dial in clockwise direction, i.e. to the right.
- A change in the environment temperature will affect the temperature in the appliance. Adjust the setting with the **A** dial accordingly. Positions towards the **longer lines** mean a lower temperature in the appliance (cooler). Settings towards the **shorter lines** mean a higher temperature (warmer).
- Recommended setting of the **A** dial is on the **eco** position (see figure).

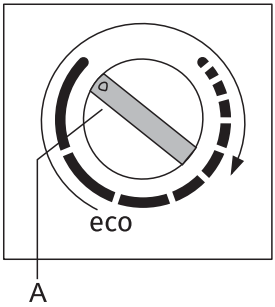

- If the temperature of the room where the appliance is installed is below 16°C, we recommend setting the **A** dial temperature to the **longest line.**.

USING YOUR APPLIANCE

Accessories
Freezer drawer
- For storing frozen food.

Ice-cube tray
- For making ice and storing ice-cubes.

Freezer food compartment
- For freezing fresh food and storing frozen and deep-frozen food for a long time.

Thawing food
- In the refrigerator compartment
- At room temperature
- In a microwave oven
- In a convection oven
- Food once thawed should be refrozen with the exception of special cases.

To avoid contamination of food, please respect the following instructions
- Opening the door for long periods can cause a significant increase of the temperature in the compartments of the appliance.
- Clean regularly surfaces that can come in contact with food and accessible drainage systems.
- Store raw meat and fish in suitable containers in the refrigerator, so that it is not in contact with or drip onto other food.
- Two-star frozen-food compartments are suitable for storing pre-frozen food, storing or making ice cream and making ice cubes.
- One-, two- and three-star compartments are not suitable for the freezing of fresh food.

Order	Compartments TYPE	Target storage temp.[°C]	Appropriate food
1	Fridge	+2 ≤ +8	Eggs, cooked food, packaged food, fruits and vegetables, dairy products, cakes, Drinks and other foods which are not suitable for freezing.
2	(***)* – Freezer	≤ –18	Seafood (fish, shrimp, shellfish), freshwater aquatic products and meat products (recommended time is 3 months – nutrition values and taste decrease with time), suitable for frozen fresh food.
3	*** – Freezer	≤ –18	Seafood (fish, shrimp, shellfish), freshwater aquatic products and meat products (recommended time is 3 months – nutrition values and taste decrease with time). Not suitable for freeing fresh food.
4	** – Freezer	≤ –12	Seafood (fish, shrimp, shellfish), freshwater aquatic products and meat products (recommended time is 2 months – nutrition values and taste decrease with time). Not suitable for freeing fresh food.
5	* – Freezer	≤ –6	Seafood (fish, shrimp, shellfish), freshwater aquatic products and meat products (recommended time is 1 month – nutrition values and taste decrease with time). Not suitable for freeing fresh food.
6	0 star	–6 ≤ 0	Fresh pork, beef, fish, chicken, some packaged processed foods, etc. (Recommended to eat within the same day, preferably not later than 3 days) . Partially packed/wrapped up encapsulated processed foods (non-freezable foods)

7	Chill	−2 ≤ +3	Fresh/frozen pork, beef, chicken, freshwater aquatic products, etc. (7 days below 0 °C and above 0 °C is recommended for consumption within that day, preferably no more than 2 days). Seafood (less than 0 for 15 days, it is not recommended to store above 0 °C)
8	Fresh Food	0 ≤ +4	Fresh pork, beef, fish, chicken, cooked food, etc. (Recommended to eat within the same day, preferably no more than 3 days)
9	Wine	+5 ≤ +20	Red wine,white wine,sparkling wine etc.

Note: please store different foods according to the compartments or target storage temperature of your purchased products.

- If the refrigerating appliance is left empty for long periods, switch off, defrost, clean, dry, and leave the door open to prevent mould developing within the appliance.

Water dispenser cleaning (special for water dispenser products):

- Clean water tanks if they have not been used for 48 h; flush the water system.

HELPFUL HINTS AND TIPS

Energy saving tips

We recommend that you follow the tips below to save energy.

- Try to avoid keeping the door open for long periods.
- Ensure the appliance is away from any sources of heat (Direct sunlight, electric oven or cooker etc.)
- Don`t set the temperature colder than necessary.
- Don`t store warm food or evaporating liguid in the appliance.
- Place the appliance in a well ventilated, humidity free room. Please refer to Instaling your new appliance chapter
- If the diagram shows the correct combination for the drawers, crisper and shelves, do not adjust the combination as this designed to be the most energy efficient configuration.

Hints for freezing

- When first staring-up or after a period out of use. Before putting the food in the compartment, let the appliance run at least 2 hours on the higher settings.
- Prepare food in small portions to enable it to rapidly and completely frozen and to make it possible to subsequently thaw only the quantity required.
- 'Wrap up the food in aluminum foil or polyethylene (plastic) and make sure that the packages are airtight.
- Do not allow fresh, unfrozen food to touch food that is already frozen, thus avoiding a rise in the temperature of latter.
- Iced products, if consumed immediately after removal from the freezer compartment can possibly cause skin to become freezer burnt.
- It is recommended to label and date each frozen package in order to keep track of the storage time.

Hints for the storage of frozen food

- Make sure that commercially frozen food was stored by the retailer.
- Once defrosted, foods deteriorate rapidly and can not be re-frozen.
- Do not exceed the storage period indicated by the food manufacturer. Note: If the appliance contains related accessories and functions.

CLEANING AND CARE

For hygienic reasons, the appliance interior, including interior accessories, should be cleaned regularly. The appliance should be cleaned and maintained at least every two months.

Warning!
The appliance should not be connected to the main power supply during cleaning. Before cleaning, switch the appliance off and remove the plug from the main power supply, switch off, or shut off the circuit breaker of fuse.

Notice!
- Remove the food from the appliance before cleaning. Store them in a cool place and keep well covered.
- Never clean the appliance with a steam cleaner. Moisture could accumulate in electrical components.
- Hot vapors can lead to the damage of plastic parts.
- Ethereal oils and organic solvents can attack plastic parts, e.g. lemon juice or the juice from an orange peel, butyric acid, or cleansers that contain acetic acid.
- Do not use any abrasive cleansers.
- Clean the appliance and the interior accessories with a cloth and lukewarm water. Commercially available dish washing detergents may also be used.
- After cleaning, wipe with fresh water and a clean dish cloth.
- Accumulation of dust at the condenser increases energy consumption; clean the condenser at the back of the appliance once a year with a soft brush or a vacuum cleaner.(Only for the outside-condenser product)
- Check the water drain hole on the rear wall of the refrigerator compartment.
- Clear a blocked drain hole with the aid of something like soft green peg, an be careful not to create any damage to the cabinet by sharp objects.
  After everything is dry, the appliance back into service.

Defrosting

Defrosting in frozen food storage compartment

- Defrosting in the freezer chamber is operated manually. Before defrosting, take the foot out.
- Tale the ice tray and drawers out or put them into the fresh food compartment temporarily.
- leave the door of the refrigerator open until ice and frost dissolve thoroughly and accumulate at the bottom of the freezer chamber. Wipe out the water with soft cloth.
- In order to speed up the process of defrosting, you may put a bowl of warm water (about 50°C) into the freezer chamber and scrape away the ice and frost with a defrosting spatula. After doing so, be sure to set the knob of the temperature regulator to the original position.
- It is not advisable to heat the freezer chamber directly with hot water or hair dryer while defrosting to avoid deformation of the inner case.
- It is also not advisable to scrape off ice and frost or separate foods from the containers which have been congealed together with the food with sharp tools or wooden bars, so as not to damage the inner casing or the surface of the evaporator.

Taking the appliance out of service

- Empty the appliance.
- Pull out the power plug.
- Clean thoroughly (see section: Cleaning and Care).
- Leave the door open to prevent odors.

TROUBLESHOOTING

Warning! Before troubleshooting, disconnect the power supply. Only qualified electrician or other personnel must carry out the troubleshooting that is not in the manual.
Important! Repairs to the appliance may only be performed by competent service engineers. Improper repairs can give rise to significant hazards for the user. If your appliance needs repairing, please contact your specialist dealer or your local Customer Service Center.

Problem:	Possible cause	Solution
Appliance does not work	• Appliance is not switched on..	• Switch on the appliance.
	• Mains plug is not plugged in or is loose.	• Plug the appliance into the electrical socket.
	• Fuse has blown or is defective.	• Check fuse, replace if necessary.
	• Outlet is defective..	• Defective parts need to be repaired by an electrician.
Appliance cools too much.	• Temperature is set too cold.	• Turn the temperature regulator to a warmer setting temporarily.
The food is too warm.	• Temperature is not properly adjusted.	• Please look in the initial Temperature Setting section.
	• Door was open for an extended period.	• Open the door only as long as necessary.
	• A large quantity of warm food was placed in the appliance within the last 24 hours.	• Turn the temperature regulation to a colder setting temporarily.
	• The appliance is near a heat source.	• Please look in the installation location section.

Problem:	Possible cause	Solution
Heavy build-up of frost, possibly also on the door seal.	• Door seal is not air-tight (possibly after reversing the door) .	• Carefully warm the leaking sections of the door seal with a hair dryer (on a cool setting). At the same time, shape the warmed door seal by hand so that it sits correctly.
Unusual noises.	• Appliance is not level.	• Readjust the feet.
	• The appliance is touching the wall or other objects.	• Move the appliance slightly.
	• A component, e.g. a pipe, on the rear of the appliance is touching another part of the appliance or the wall.	• If necessary, carefully bend the component out of the way.
The compressor dose not start immediately after changing the temperature setting.	• This is normal, no error has occurred.	• The compressor starts after a period of time.
Water on the floor or storage shelves.	• Water drain hole is blocked.	• Refer the “Cleaning and Care” section.

DISPOSAL OF THE APPLIANCE

It is prohibited to dispose of this appliance as household waste.

Packaging materials
Packaging materials with the recycle symbol are recyclable. Dispose of the packaging into a suitable waste collection container to recycle it.

Before disposal of the appliance
1. Pull out the mains plug from the mains socket.
2. Cut off the power cord and discard with the mains plug

Warning! Refrigerators contain refrigerant and gases in the insulation. Refrigerant and gases must be disposed of professionally as they may cause eye injuries or ignition. Ensure that tubing of the refrigerant circuit is not damage prior to proper disposal.

	CORRECT DISPOSAL OF THIS PRODUCT
	The symbol on the product or its packaging indicates that the product should not be treated as normal household waste. The product should be taken to an authorized collection centre for waste electric and electronic equipment processing. Correct disposal of the product will help prevent any negative effects on the environment and health of people which could occur in case of incorrect product removal. For detailed information on removal and processing of the product, please contact the relevant municipal body in charge of waste management, your waste disposal service, or the store where you bought the product.

Gorenje, d.o.o.
Partizanska 12
SI - 3320 Velenje, Slovenija
info@gorenje.com
www.gorenje.com