Use & Care
MANUAL



5 SERIES
Professional / Custom Panel
Built-In Bottom-Freezer Refrigerator

VCBB5363E/ CVCBB5363E
FDBB5363E / CFDBB5363E

Congratulations

We hope you will enjoy and appreciate the care and attention we have put into every detail of your new, state-of-the-art refrigerator.

Your appliance is designed to offer years of reliable service. This Use and Care Guide will provide you with the information you need to become familiar with your refrigerator's care and operation.

Your complete satisfaction is our ultimate goal. If you have any questions or comments about this product, please contact the dealer from whom you purchased it, or contact our Consumer Support Center at 1-888-845-4641.

We appreciate your choice of our refrigerator and hope that you will again select our products for your other major appliance needs.

For more information about the complete and growing selection of products, visit us online at vikingrange.com in the US or brigade.ca in Canada

Table of Contents

Getting Started

Warnings ____ **3**
Important Information ____ **4**
Proper Disposal (of old refrigerator) ____ **4**
Features ____ **5**

Product Controls

Settings and Functions ____ **6**

Operation

Refrigerator ____ **9**
Freezer ____ **11**
Automatic Ice Maker ____ **11**
Food Storage Guide ____ **12**

Product Care

Cleaning and Maintenance ____ **13**
Troubleshooting ____ **16**
Service Information ____ **17**
Warranty ____ **18**

Warnings

Your safety is important to us. This use and care manual contains safety symbols and statements. Please pay special attention to these symbols and follow any instructions given.
This symbol alerts you to hazards such as fire, electrical shock or other injuries.

⚠ WARNING

To reduce the risk of fire, electric shock, or injury when using your unit, follow these basic precautions:

- Read all instructions before using the unit.
- **NEVER** allow children to operate, play with, or crawl inside the unit.
- **NEVER** clean unit parts with flammable fluids. The fumes can create a fire hazard or explosion.
- **ALWAYS** turn the power on/off switch (located behind the air grille on top right side) to the OFF position before attempting to change light bulbs, clean, or service the unit.

FOR YOUR SAFETY

DO NOT STORE OR USE GASOLINE OR OTHER FLAMMABLE VAPORS AND LIQUIDS IN THE VICINITY OF THIS OR ANY OTHER APPLIANCE. THE FUMES CAN CREATE A FIRE HAZARD OR EXPLOSION.

⚠ WARNING



ELECTRICAL SHOCK HAZARD

- Plug into a grounded 3-prong outlet.
- If a 2-prong wall receptacle is encountered, contact a qualified electrician.
- **DO NOT** remove ground prong.
- Unit must be grounded at all times.
- **DO NOT** use an adapter.
- **DO NOT** use an extension cord.
- Failure to follow these instructions can result in death, fire, or electrical shock.-

⚠ WARNING

To avoid serious illness or death, do not use unit where water is unsafe or of unknown quality without adequate disinfection before or after use of filter.

⚠ WARNING

To avoid electrical shock which can cause severe personal injury or death, turn power disconnect switch to OFF before cleaning. After cleaning, return power disconnect switch to ON position.

⚠ WARNING



ELECTRICAL SHOCK HAZARD

Disconnect power or turn power disconnect switch to OFF position before removing top grille. Failure to do so can result in death or electrical shock.

⚠ WARNING



BURN HAZARD

DO NOT touch condenser coils near defrost pan. Doing so can result in burns.

Important Safety Instructions

- Install and level your refrigerator on a floor that will hold its weight,plus food weight (approximately 1200 pounds [540kg]) and in an area suitable for its size and use.
- **DO NOT** install a refrigeration unit near a heat source, nor in a location where the surrounding temperature will fall below 60°F (16° C).
- **DO NOT** allow your refrigerator to be exposed to the weather or outdoor elements.
- Connect your refrigerator only to the appropriate kind of electrical outlet, with the correct power supply and grounding. (*Refer to the Electrical Requirements section of the Installation Instructions.*)
- Use the refrigerator only for the uses described in this manual.
- Properly maintain the refrigerator.
- Be sure the refrigerator is not used by anyone unable to operate it properly.

Proper Disposal (of old refrigerator)

IMPORTANT:
Now that you have a new refrigerator, it is extremely important that you dispose of your old appliance in a way that minimizes the possibility that children will find it. There have been many cases in years past of children crawling inside junked and abandoned refrigerators and becoming trapped or suffocated.

Contact your municipal waste disposal authority to find out the best and safest way to dispose of your old refrigerator.

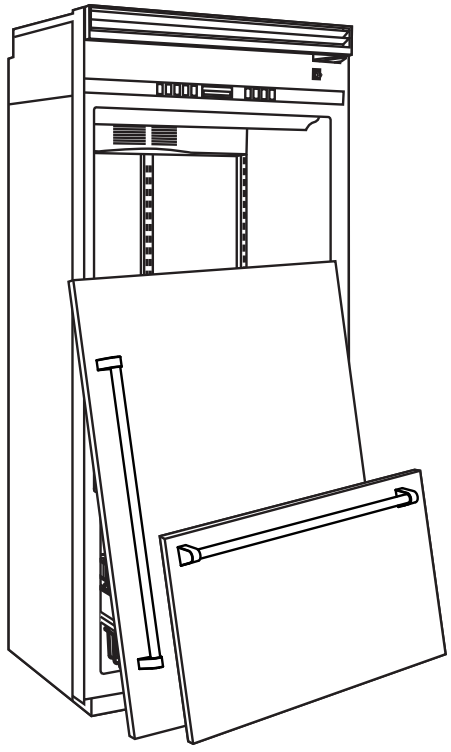

⚠ WARNING

RISK OF CHILD ENTRAPMENT
Before You Throw Away Your Old Refrigerator or Freezer:
- Take off the doors.
- Leave the shelves in place so that children may not easily climb inside.

Features

- **ProChill™ Temperature Management System**
  he variable speed DC Overdrive™ Compressor is one of the quietest, most technologically advanced compressors available. Electronic controls with digital temperature readouts, maintain temperatures and the multi-channel airflow system and Odor Eliminator™ Evaporator remove odors and excess humidity.

- **Plasmacluster™* Ion Air Purifier**
  The Plasmacluster™ Ion Air Purifier uses ions to eliminate airborne bacteria and mold spores, remove odors and enhance food preservation. Because of the unique technology, the Plasmacluster™ will continue to keep the refrigerator bateria and mold free without ever having to be replaced.

- **Adjustable Humidity Zone™ Drawer(s)**
  Equipped with an adjustable humidity control, the Adjustable Humidity Zone™ Drawer(s) can be set on the high setting for leafy greens or the low setting for fruits and vegetables with skins.

- **LED Lighting**
  Top and sidewall interior LED lighting provides bright illumination of refrigerator contents.

- **Super Clog-Resistant™ Condenser**
  The pin and tube design of the condenser coil prevents dust and other airborne particles from clogging the condenser. Under normal operation, the condenser is maintenance-free.

**Plasmacluster is a trademark of Sharp Corporation.*

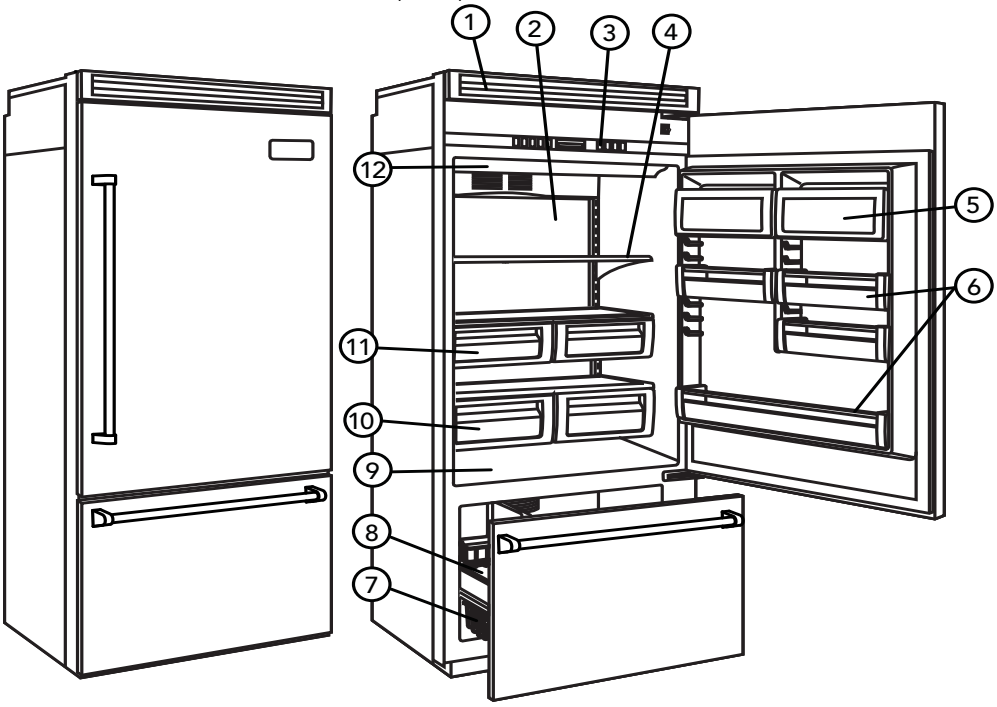

1. Variable Speed DC Overdrive™ Compressor and Super Clog-Resistant™ Condenser
2. Plasmacluster™ Ion Air Purifier
3. Electronic Controls with digital temperature readouts
4. Spillpoof Plus Shelf w/ Nano Technology
   Full-Width (1)
   Spillproof Shelves
   Full-Width (2)
5. Dairy Compartments (2)
6. Half-Width Adjustable Door Bins (3)
   Full-Width NonAdjustable Door Bin (1)
   (Patented)
7. Wire Freezer Basket (2)
8. Ice Bucket (1)
9. Large Pizza Box Storage
10. Adjustable Humidity Zone™ Drawers (2)
11. Deli Drawers
12. LED Lighting

In order for your new refrigerator to work properly, it is important that you understand its various features, controls, and how to use them.

Power On/Off Switch (Power Interruption Switch)

The power on/off switch is located behind your refrigerator's top grille. It is used to turn the power off when cleaning the refrigerator or changing the light bulbs. Your refrigerator arrives from the factory with the power interruption switch on.

To turn power off, remove the center grille louver. Press the power on/off switch to the off position.

To turn power on, press power on/off switch to the on position. Replace the center grille blade.

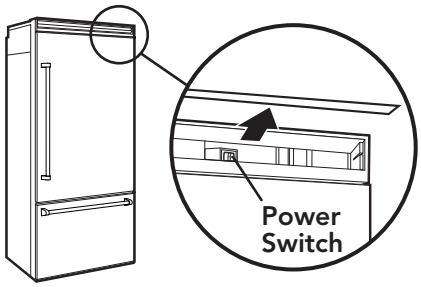

IMPORTANT: Be sure the power on/off switch is in the on position after cleaning or changing light bulbs.

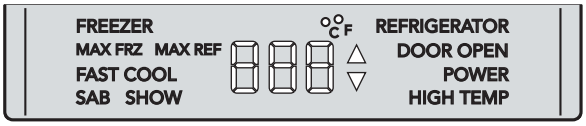

Showroom Mode Initiation



Showroom mode allows electronic controls and interior lights to function independently of refrigeraton system.



To enter the showroom mode: Press and hold "ACTIVATE CONTROLS" pad; while holding, press and hold the "HIGHER" and "ALARM OFF" pads together for 3 seconds. Three beeps will sound and SHOW will be lit. Showroom mode is entered.



To exit the showroom mode: press and hold "ACTIVATE CONTROLS" pad; while holding, press and hold the "HIGHER" and "ALARM OFF" pads together. Three beeps will sound and control will revert to normal operation and display.

Electronic Temperature Settings



Your refrigerator's electronic controls are located behind the door above the cabinet interior. To activate the electronic control panel, press "ACTIVATE CONTROLS" pad. All other pads, except the "ALARM OFF" pad, will remain inactive until the "ACTIVATE CONTROLS"pad is pressed. Once activated, pad remains programmable for at least ten minutes.

When you first plug your new refrigerator in, you will find that the refrigerator is factory set at 38° F in the refrigerator and 0° F in the freezer. Wait 24 hours after plug-in for the cabinets to reach this setting. After 24 hours, you may adjust controls as desired.





To change from °F to °C, press and hold "ACTIVATE CONTROLS" then press and hold "ALARM OFF" for 3 seconds. To change back, follow the same steps.





To adjust the refrigerator or freezer temperature, simply press the "ACTIVATE CONTROLS" pad, then "Ref Temp" pad or "Frz Temp" pad. Press the "HIGHER" or "LOWER" pad to adjust temperature setting one degree at a time.

Note: *Allow 24 hours for temperature to reach desired setting after any change in set temperature.*

Settings and Functions

Entry Tone



The entry tone is the "beep" you will hear when you press the control pad. You can deactivate the entry tone by pressing and holding the "ACTIVATE CONTROLS" pad for three to five seconds. You will hear three short beeps to let you know that the entry tone feature has been deactivated.

To activate the entry tone, simply press and hold the "ACTIVATE CONTROLS" pad for three to five seconds.

Fast Cool





Fast Cool runs the compressor at high speed for 2 hours to cool the refrigerator as quickly as possible. After 2 hours, the refrigerator will return to the previous setting.

To activate fast cool, press "ACTIVATE CONTROLS" followed by the "FAST COOL" pad. The fast cool light will be lit.

Max Refrigerator Mode





Max refrigerator mode adjusts the refrigerator temperature to the coldest setting for four hours, at the end of which the refrigerator's temperature automatically returns to its previous setting.

To activate the max refrigerator mode, simply press the "ACTIVATE CONTROLS" pad, followed by the "MAX REF" pad. The "MAX REF" light will glow to let you know you've turned on the max refrigerator mode.

To deactivate the max refrigerator mode before the end of the four hour cycle, press the "ACTIVATE CONTROLS" pad, followed by the "MAX REF" pad.

Max Freezer Mode





Max freezer mode adjusts the freezer temperature to the coldest setting for 6 hours, at the end of which, the freezer temperature automatically returns to its previous setting.

To activate the max freezer mode, press the "ACTIVATE CONTROLS" pad, followed by the "MAX FRZ" pad. The "MAX FRZ" light will glow to let you know you have turned on the max freezer mode.

To deactivate the max freezer mode before the end of the 6 hours cycle, simply press the "ACTIVATE CONTROLS" pad, followed by the "MAX FRZ" pad.

Door Open Alarm



Door open alarm sounds and the "DOOR OPEN" light blinks if either door is left open for more than three minutes.

To deactivate the door open alarm, press the "ALARM OFF" pad or close the door that is open.

High Temperature Alarm

High temperature alarm sounds and the "HIGH TEMP" light glows if the refrigerator or the freezer temperature is too high for two hours. A blinking light signals which part of the appliance is affected. The alarm sound will end when the temperature is brought back to a proper setting.

To deactivate the high temperature alarm, press the "ALARM OFF" pad.

Power Loss Alarm



No alarm sounds, however, the "POWER" indicator flashes indicating a power loss. Press "ALARM OFF" to clear.

Temperature Sensor Alarm

Temperature sensor alarm is a special feature that electronically senses temperature sensor problems. The temperature sensor alarm will sound and the display will show either oPn or Shr. The alarm can be deactivated by pressing the "Alarm Off" pad on your refrigerator's control panel. If the display does not return to showing the temperature, contact an authorized Viking Range, LLC technician immediately.

Settings and Functions

Display



To activate temperature display, press the "ACTIVATE CONTROLS" pad.





To deactivate temperature display, press the "ACTIVATE CONTROLS" pad, followed by the "DISPLAY OFF" pad.

Sabbath Mode

Sabbath mode is used to disable interior lights and alarms for observance of the Sabbath.

Before the Sabbath mode is engaged, the bale arm of the ice maker needs to be raised until it clicks into the detent. This turns off the power to the ice maker.



To enter Sabbath mode, press the "ACTIVATE CONTROLS" pad to activate the control panel. Then, press and hold "Activate Controls" and "Display Off" pads simultaneously for three seconds. It will beep three times and light the SAB indicator so you will know that you have activated Sabbath mode.



When your refrigerator is in Sabbath mode, interior lights, display (excluding SAB indicator, temperature, and compartment indicator), and alarms are disabled.

If your refrigerator loses power while in Sabbath mode, it will return to the Sabbath mode when power is reestablished.



To exit the Sabbath mode, press the "ACTIVATE CONTROLS" pad. Then, press and hold "ACTIVATE CONTROLS" and "DISPLAY OFF" pads simultaneously for three seconds. You will then hear three beeps letting you know that you have turned the Sabbath mode off.

Once your refrigerator has left the Sabbath mode, the bale arm of the ice maker needs to be pushed downward until it is no longer in the detent. This will restore power to the ice maker.

Spillproof Plus Shelves with Nano Technology

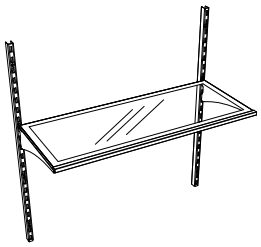

Some refrigerator models include Spillproof Plus shelves. These spillproof shelves contain liquids with no raised edges in order to provide extra shelf capacity.

Standard Spillproof Shelves

Standard spillproof shelves are constructed of polypropylene molded around the glass and metal rail. This design means that the shelves are completely enclosed and liquids can't seep under the glass. This localizes spills and makes clean-up easier.

Note: *Foods and beverages placed on the uppermost shelf under the air vent may freeze.*

Shelf Adjustment

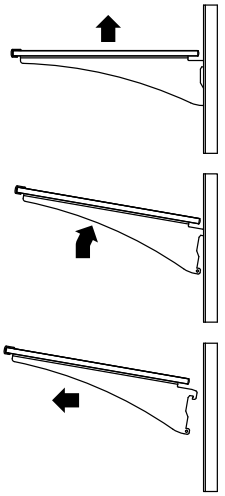

You can adjust the shelves to match the way you use your refrigerator. To remove the shelves, push up on the shelf, tilt upward at the front releasing the hooks from the shelf support, then pull the shelf straight out.

To replace shelves, guide the rear hooks of the shelf into the slots in the shelf supports. Then, tilt the shelf up at the front until the hooks drop into the slots, and lower the front of shelf to level position.

⚠ CAUTION

To avoid personal injury and property damage, confirm shelf is secure before placing items on shelf.

⚠ CAUTION

To avoid personal injury or property damage, handle tempered glass shelves carefully. Shelves may break suddenly if nicked, scratched, or exposed to sudden temperature change.

Door Bin Adjustment

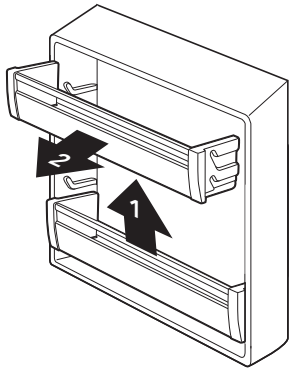

Your refrigerator's door bins hold two-liter bottles and can be placed in any position on the refrigerator door. To remove a bin, simply grasp it, lift the bin up, and pull it out.

To replace the bin, place it over the glides in the refrigerator door, and push the door bin down to lock it into place.

Dairy Compartments

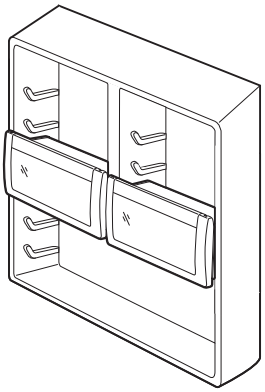

Your refrigerator's dairy compartment doors are surrounded by gaskets for a tighter seal. This allows items to stay fresh much longer. The dairy compartments can be adjusted to meet your unique storage needs.

To remove the dairy compartments, simply grasp, lift up and pull out. To replace, position the dairy compartment over the glides in the refrigerator door, and push the compartment down to lock it into place.

Deli Drawers

To remove drawer, roll the drawer out to the stop. Then, on each side of the drawer, locate the black lever on the glides and lift up until the drawer disengages from the glides.

Pull the drawer out the rest of the way. To replace the drawer, extend the glides out to the stop. Next, place the drawer onto the glides and push it back until the drawer engages the hook. Lower the front part of the drawer, grasp the glides/drawer and lightly squeeze until the drawer snaps onto the glides. Then slide the drawer back until it stops.

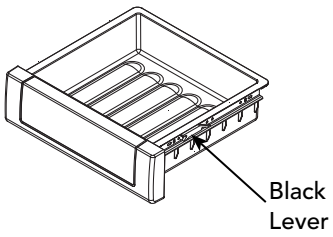

Adjustable Humidity Zone™ Drawer(s)

The moisture control on your refrigerator produce drawer(s) gives you the ability to change the amount of moisture or humidity in a drawer, and the clear top section allows you to see into a drawer without opening it.

The moisture control is located underneath the front trim. Slide the control to a higher setting for storing deli items or produce with leaves, such as lettuce, spinach, or cabbage. Slide the control to a lower setting for storing fruits and vegetables with skins, such as apples, corn, or tomatoes. *See "Food Storage Guide" (pg. 30) for more information on storing foods properly.*

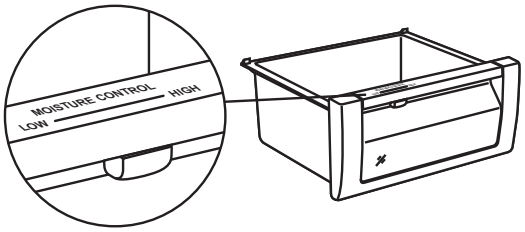

To remove drawer, roll the drawer out to the stop. Then, on each side of the drawer, locate the black lever on the glides and lift up until the drawer disengages from the glides. Pull the drawer out the rest of the way.

To replace the drawer, extend the glides out to the stop. Next, place the drawer onto the glides and push it back until the drawer engages the hook. Lower the front part of the drawer, grasp the glides/drawer and lightly squeeze until the drawer snaps onto the glides. Then slide the drawer back until it stops.

Freezer Basket Divider

The freezer basket divider separates the freezer into sections for easy food organization.

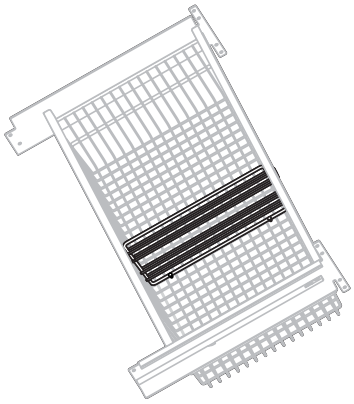

⚠ WARNING

If the freezer basket divider is removed, there is enough space for children to crawl inside. To prevent accidental child entrapment, **DO NOT** allow children to play inside drawer.

Automatic Ice Maker

The ice maker and slide-out ice drawer on your refrigerator are not adjustable, but the ice drawer slides forward for easy access to ice.

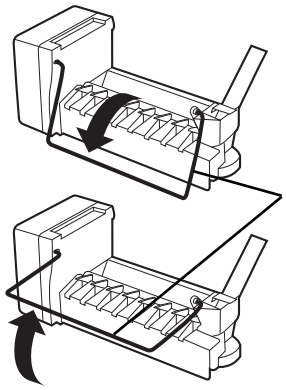

After the refrigerator reaches normal temperature, the ice maker fills with water and begins operating. Under normal conditions, the ice maker will produce seven to nine batches of ice per 24 hour period.

Note: *Allow 24 to 48 hours after installation before looking for ice in your ice drawer. You should discard the first three full drawers of ice produced by your refrigerator, and should also throw out the first drawer full of ice your refrigerator produces after extended periods of non-use.*

During ice production, the ice maker arm raises and lowers. When the ice bin is full, the ice maker arm automatically turns the ice maker off. To manually stop ice production, raise the ice maker arm. You will hear a definite click when you have the arm in the right position. The ice maker won't produce any more ice until you lower the ice maker arm.

⚠ CAUTION

To avoid damage to ice maker, observe the following:
- **DO NOT** force ice maker arm down or up past stop position.
- **DO NOT** place or store anything in ice bucket.

Food Storage Guide

Storing Fresh Food

Wrap or store food in the refrigerator in airtight and moisture-proof material. This prevents food odor and taste transfer. For dated products, check use-by date to ensure freshness.

To store leafy vegetables, remove store wrapping. Then tear off bruised and discolored areas. Wash the vegetables in cold water and drain, and then place them in a plastic bag or plastic container and store in your produce drawer.

For vegetables with skins, such as carrots and peppers, store in plastic bags or containers.

When refrigerating or freezing fruit, wash the fruit and then let it dry. Store the fruit in plastic bags. Don't wash or hull berries until they are ready to use. Instead, sort and keep berries in their original container in the produce drawer, or store in a loosely closed paper bag on the refrigerator shelf.

Store eggs without washing them. Keep eggs in their original carton or in your refrigerator's egg bin.

Wipe milk cartons. For best storage, place milk on an interior shelf.

Keep opened butter in covered dish or closed compartment. When storing butter in the freezer, wrap it in freezer packaging.

When you have leftovers, cover then with plastic wrap, aluminum foil, or store the leftovers in plastic containers with tight lids.

Store meat in its original wrapping, as long as it's airtight and moisture-proof. Rewrap meat if necessary.

Note: *When storing meat longer than the recommended times, freeze the meat.*

Recommended storage times:

Chicken	1-2 days	Bacon	5-7 days
Ground Beef	1-2 days	Cold Cuts	3-5 days
Steaks/Roasts	3-5 days	Variety Meats	1-2 days
Cured Meats	7-10 days		

Note: *Use fresh fish and shellfish the same day as purchased.*

Packaging Food for Freezing

The secret of successful freezing is in the packaging; the way you close and seal a package of food must not allow air or moisture in or out, or the quality of the food will deteriorate while frozen.

Packaging you should not use for freezing includes:

- Bread wrappers
- Non-polyethylene plastic containers
- Containers without lids
- Wax paper or wax-coated freezer wrap
- Thin, semi-permeable wrap

Recommended packaging:

- Rigid plastic containers with tight-fitting lids
- Straight-sided canning/freezing jars
- Heavy-duty aluminum foil
- Plastic-coated paper
- Non-permeable plastic wraps (made from saran film)
- Zip-top freezer bags

Follow package or container instructions for proper freezing methods.

Freezing Foods

DO NOT expect your freezer to quick-freeze large quantities of food; **DO NOT** load more than two to three pounds of unfrozen food per cubic foot within 24 hours. Leave enough space for air to circulate around packages, and be careful to leave enough room at the front so the freezer door can close tightly.

A full freezer stays cold longer than a partially filled one, and a freezer full of meat stays cold longer than a freezer full of baked goods. If food contains ice crystals, it may be safely refrozen, although the quality and flavor may be affected. If the condition of the food is poor, or if you feel it is unsafe, dispose of it.

Storage times will vary according to the quality of food, the type of packaging or wrap used (airtight and moisture-proof), and the storage temperature, which should be 0° to 2°F (-18° to -17° C).

Cleaning & Maintenance

⚠ CAUTION

To avoid personal injury or property damage, read and follow all cleaning product manufacturer's directions.

⚠ WARNING

To avoid electrical shock which can cause severe personal injury or death, turn power disconnect switch to OFF before cleaning. After cleaning, return power disconnect switch to ON position.

Your refrigerator is built to give you many years of dependable service. However, there are a few things you can do to help extend its life. This section tells you how to clean your refrigerator and what to do when going on vacation, moving, or during a power outage.

Interior Surfaces

Wash the interior surfaces of your refrigerator with four tablespoons of baking soda dissolved in one quart of warm water. Use a soft, clean cloth. Rinse these surfaces with warm water, and dry with a soft clean cloth.

DO NOT use the following to clean interior surfaces:

- Abrasive or harsh cleaners, such as ammonia or chlorine bleach
- Concentrated detergents or solvents
- Metal scouring pads

These products can scratch, crack and discolor your refrigerator's surfaces. Also, **NEVER** wash the ice bucket or shelves in the dishwasher. They must be cleaned by hand.

Cleaning Chart

Part	What to Use	How to Clean
Removable parts (shelves, drawers)	Sponge or cloth with mild detergent and warm water	Hand wash, rinse, and dry thoroughly.
Front door panels • stainless steel • painted	Stainless steel cleaner Sponge or cloth with mild detergent and warm water **DO NOT use cleaners containing chlorine bleach.**	Wipe with soft cloth. Hand wash, rinse, and dry thoroughly.
Interior walls ((allow freezer to warm up so cloth will not stick)	Sponge, soft cloth or paper towel with baking soda or mild detergent and warm water	Hand wash, rinse, and dry thoroughly.
Door liners and gaskets	Sponge, soft cloth or paper towel with mild detergent and warm water. **DO NOT use cleaning waxes, concentrated detergents, or cleaners containing chlorine bleach.**	Wash, wipe, and dry thoroughly.
Plastic parts (covers, panels)	Soft, clean sponge or soft clean cloth with mild detergent and warm water. **DO NOT use paper towels, window sprays, or scouring pads. These can scratch and damage the finish.**	Wash, wipe, and dry thoroughly.
Super Clog-Resistant™ Condenser*	Vacuum cleaner with extended narrow attachment	Vacuum coils when dusty or dirty.

** Under normal conditions, condenser is maintenance-free.*

Cleaning & Maintenance

Glass Shelves
To clean your refrigerator's glass shelves, lift the shelf out by lifting the front and releasing the hooks from the metal track. Then pull the shelf out. Be sure to allow the glass shelves to adjust to room temperature before cleaning.

To clean crevices, dilute mild detergent with water. Brush this solution into crevices using a plastic bristle brush. Let set for five minutes. Spray warm water into crevices using faucet spray attachment. Dry glass shelf thoroughly and replace shelf by inserting hooks into metal track and lowering front.

Door Gaskets
Clean the door gaskets every three months using the same procedures used for interior surfaces. You should apply a light film of petroleum jelly to keep gaskets pliable.

⚠ CAUTION

To avoid personal injury or property damage, handle tempered glass shelves carefully. Shelves may break suddenly if nicked, scratched, or exposed to sudden temperature change.

⚠ WARNING



ELECTRICAL SHOCK HAZARD
Disconnect power or turn power disconnect switch to OFF position before removing top grille. Failure to do so can result in death or electrical shock.

⚠ WARNING



BURN HAZARD
DO NOT touch condenser coils near defrost pan. Doing so can result in burns.

Defrost Pan
To prevent condensation from overflowing, check defrost pan periodically.

To check defrost pan, remove two screws securing kickplate to unit. Pull defrost pan forward until it stops. Remove any excess water from pan. Wipe and clean defrost pan with a sponge. Return defrost pan to original position. Return kickplate to unit by securing with two screws.

Door Stop Adjustment
Your refrigerator is factory set at the 110° door stop position. To change to either the 90° or 120° position, remove the door stop pin using a 3/16" (0.5 cm) allen wrench.

Bottom-Freezer

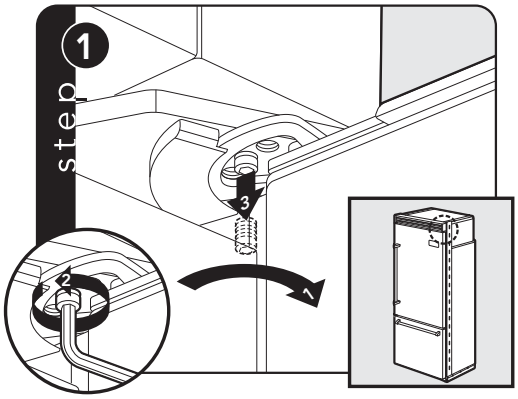

Open refrigerator door so door stop and shoulder screw are accessible.

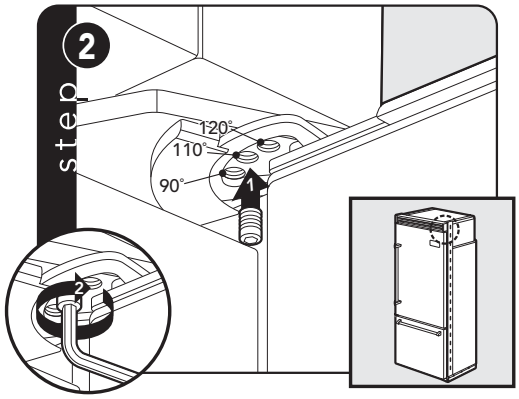

Remove shoulder screw and place in 90° or 120° position.

Cleaning & Maintenance

Saving Energy

You can help your refrigerator use less electricity with these simple tips:

- Open the door as few times as possible. Think about what you need before you open the door. Get everything out at one time. Keep food organized so you will not have to search for what you want. Close door as soon as food is removed.
- **DO NOT** overcrowd the unit so air movement is blocked.
- **DO NOT** set the unit to temperature colder than necessary.

Vacation Tip

When you will be gone from home a short time (less than four weeks), there is no need to shut off your refrigerator. However, be sure to:

- Use any perishables.
- Freeze other items.
- Raise the signal arm in the automatic ice maker to the off (up) position and shut off water supply to the ice maker.

If you will be away from home for a month or more, follow these guidelines:

- Remove all food.
- Turn the power disconnect switch to the off position.
- Clean the unit and door gaskets according to the "Cleaning and Maintenance" chart on page 29.
- Prop doors open with rubber or wood blocks so air can circulate inside. This will keep odor and mold from building up.
- Raise the signal arm in the automatic ice maker to the off (up) position and shut off water supply to the ice maker.

Power Interruptions

If electric service to your refrigerator will be interrupted for 24 hours or less, keep the doors to the freezer closed. This helps food stay frozen.

If service will be interrupted longer than 24 hours, remove all frozen food and store it in a frozen food locker, or place two pounds of dry ice inside the freezer for every cubic foot of interior volume. This will keep food frozen for two to four days. Be sure to wear gloves to protect your hands from dry ice burns. If neither a food locker or dry ice is available, you should use or can your perishable food at once.

Understanding Sounds You May Hear

Your new refrigerator may make different sounds than your old one. Hard surfaces, such as the ceilings, walls, and cabinets around the unit can make these sounds seem louder. However, these sounds are normal and will soon become familiar; they indicate that your refrigerator is working properly.

Here are some of the noises you may hear and what they are:

- Freezer or refrigerator fresh food fan: sounds like air rushing or whirling
- Sealed system (evaporator and heat exchanger) refrigerant flow: sounds like gurgles, pops or boiling water
- Defrost heater: sizzles, hisses or pops
- Condenser fan: air rushes and whirls
- Compressor: has a high pitched hum or pulsating sound
- Ice maker valve hookup: buzzes when ice maker fills with water. This occurs whether or not the unit is connected to water supply. If the unit is not connected to water supply, stop sound by raising ice maker arm to off position.

Most performance problems you might encounter with your new refrigerator will be minor and you should be able to fix them yourself without tools.

Listed below are the most common problems consumers run into with their appliances. Please read through this and see if it can solve your problem before calling for service.

Common Refrigerator Problems

Problem	Possible Cause And/Or Remedy
Unit will not operate	Is the power cord plugged into a live circuit with the proper voltage? Has a household fuse blown or circuit breaker tripped? Is the power switch in the on position?
Unit makes unfamiliar sounds	See "Understanding Sounds You May Hear" on page 35 for descriptions of normal sounds and what makes them.
Water in the defrost pan	This is normal in hot, muggy weather. Make sure the pan is level so it does not overflow.
Ice maker will not operate	Is the freezer cold enough to make ice? It could take overnight for the freezer to reach the proper temperature. Is the signal arm in the on (down) position? Is the water valve turned on? Is water getting to the water valve? Check water line for leaks.
Lights do not work	Has a household fuse blown or circuit breaker tripped? Is a bulb burned out? For models with LED lighting, contact an authorized service agency.
Motor seems to run too long	The motor naturally runs longer on hot days, if the room is too warm, if a large amount of food has been added, or if the doors are opened often.
Temperature display does not match set point	Just plugged in unit, just put in hot food, opened the door for an extended time or frequently. Allow unit to stabilize for 24 hours.
Ice crescents attached at corners	This is normal. They break apart easily. Shake bin occasionally to keep cubes seperated.
Ice maker will not operate or ice is not made fast enough	• On/off lever is in the OFF (up) position. Lower lever to ON (down) position. • Freezer is not cold enough. Adjust temperature controls and wait 24 hours.
Off-taste or odor in ice	• New plumbing connections can cause discolored or off-flavored ice. Discard the first three harvests of ice. • Cubes are stored too long. Throw them away and make a new supply. • Food is not wrapped properly • Freezer and ice bin need to be cleaned • Water may contain minerals. A filter may be needed to remove them.

Service Information

If service is required, call your authorized service agency.

Have the following information readily available:
- Model number
- Serial number
- Date purchased
- Name of dealer from whom purchased

Clearly describe the problem that you are having. If you are unable to obtain the name of an authorized service agency, or if you continue to have service problems, contact Viking Range at (888) 845-4641 or write to:

VIKING RANGE, LLC
PREFERRED SERVICE
111 Front Street
Greenwood, Mississippi 38930 USA

Record the information indicated below. You will need it if service is ever required. The serial number and model numbers for your refrigerator are located on the upper wall, behind the lighting:

Model No. _____ Serial No. _____

Date of Purchase _____ Date Installed_____

Dealer's Name_____

Address _____

_____

If service requires installation of parts, use only authorized parts to insure protection under the warranty.

Keep this manual for future reference.

BUILT-IN BOTTOM-FREEZER REFRIGERATION WARRANTY

THREE YEAR FULL WARRANTY

Built-in bottom-freezer refrigerators and all of their component parts, **except as detailed below*†**, are warranted to be free from defective materials or workmanship in normal residential use for a period of three (3) years from the date of original retail purchase or closing date for new construction, whichever period is longer. Viking Range, LLC, warrantor, agrees to repair or replace, at its option, any part which fails or is found to be defective during the warranty period.

***FULL NINETY (90) DAY COSMETIC WARRANTY:** Product is warranted to be free from cosmetic defects in materials or workmanship (such as scratches on stainless steel, paint/porcelain blemishes, etc.) for a period of ninety (90) days from the date of original retail purchase or closing date for new construction, whichever period is longer. Any defects must be reported to the selling dealer within ninety (90) days from date of original retail purchase. Viking Range, LLC uses high quality processes and materials available to produce all color finishes. However, slight color variation may be noticed because of the inherent differences in painted parts and porcelain parts as well as differences in kitchen lighting, product locations, and other factors. Therefore, this warranty does not apply to color variation attributable to such factors.

†FULL NINETY (90) DAY WARRANTY IN "RESIDENTIAL PLUS" APPLICATIONS: This full warranty applies to applications where use of the product extends beyond normal residential use, but the warranty period for products used in such applications is ninety (90) days. Examples of applications covered by this warranty are bed and breakfasts, fire stations, private clubs, churches, yachts, etc. Under this "Residential Plus" warranty, the product, its components and accessories are warranted to be free from defective material or workmanship for a period of ninety (90) days from the date of original retail purchase. This warranty excludes use of the product in all commercial locations such as restaurants, food service locations and institutional food service locations.

SIX YEAR FULL WARRANTY ON SEALED REFRIGERATION PARTS AS LISTED

Any sealed refrigeration system component, as listed below, is warranted to be free from defective materials or workmanship in normal household use during the fourth through the sixth year from the date of original retail purchase. Viking Range, LLC, warrantor, agrees to repair or replace, at its option, any part which fails or is found to be defective during the warranty period.

Sealed Refrigeration System Components: Compressor, Evaporator, Condenser, Connecting Tubing, Dryer/Strainer

TWELVE YEAR LIMITED WARRANTY ON SEALED REFRIGERATION PARTS AS LISTED

Any sealed refrigeration system component, as listed above, which fails due to defective materials or workmanship in normal household use during the seventh through the twelfth year from the date of original retail purchase will be repaired or replaced, free of charge for the part itself, with the owner paying all other costs, including labor.

TERMS AND CONDITIONS

This warranty extends to the original purchaser of the product warranted hereunder and to each transferee owner of the product during the term of the warranty and applies to products purchased and located in the United States, Canada, Mexico and the Caribbean (excluding Cuba, Dominican Republic, and Haiti). Products must be purchased in the country where service is requested. If the product or one of its component parts contains a defect or malfunction during the full warranty period after a reasonable number of attempts by the warrantor to remedy the defect or malfunction, the owner is entitled to either a refund or replacement of the product or its component part or parts. Replacement of a component part includes its free installation, except as specified under the limited warranty. Under the terms of this warranty, service must be performed by a factory authorized Viking Range, LLC service agent or representative. Service will be provided during normal business hours, and labor performed at overtime or premium rates shall not be covered by this warranty.

Owner shall be responsible for proper installation, providing reasonable and necessary maintenance, providing proof of purchase upon request, and making the appliance reasonably accessible for service. The return of the Owner Registration Card is not a condition of warranty coverage. You should, however, return the Owner Registration Card so that Viking Range, LLC can contact you should any question of safety arise which could affect you.

This warranty gives you specific legal rights, and you may also have other rights which may vary from jurisdiction to jurisdiction.

WHAT IS NOT COVERED BY THIS WARRANTY: This warranty shall not apply to damage resulting from abuse, failure to provide reasonable and necessary maintenance, accident, delivery, negligence, natural disaster, loss of electrical power to the product for any reason, alteration, outdoor use, improper installation, improper operation, or repair or service of the product by anyone other than an authorized Viking Range, LLC service agency or representative. This warranty does not apply to commercial usage.

LIMITATION OF REMEDIES AND DURATION OF IMPLIED WARRANTY

OWNER'S SOLE AND EXCLUSIVE REMEDY FOR A CLAIM OF ANY KIND WITH RESPECT TO THIS PRODUCT SHALL BE THE REMEDIES SET FORTH ABOVE. VIKING RANGE, LLC IS NOT RESPONSIBLE FOR CONSEQUENTIAL OR INCIDENTAL DAMAGE, INCLUDING BUT NOT LIMITED TO FOOD OR MEDICINE LOSS, DUE TO PRODUCT FAILURE, WHETHER ARISING OUT OF BREACH OF WARRANTY, BREACH OF CONTRACT OR OTHERWISE. Some jurisdictions do not allow the exclusion or limitation of incidental or consequential damages, so the above limitation or exclusions may not apply to you. **ANY IMPLIED WARRANTIES OF MERCHANTABILITY OR FITNESS FOR A PARTICULAR PURPOSE APPLICABLE TO THIS PRODUCT ARE LIMITED IN DURATION TO THE PERIOD OF COVERAGE OF THE APPLICABLE EXPRESS WRITTEN LIMITED WARRANTIES SET FORTH ABOVE.** Some states do not allow limitations on how long an implied warranty lasts, so the above limitation may not apply to you.

WARRANTY SERVICE

To obtain warranty service, contact an authorized Viking Range, LLC service agent, or Viking Range, LLC, 111 Front Street, Greenwood, Mississippi 38930, (888) 845-4641. Provide model and serial number and date of original purchase or closing date for a new construction. For the name of your nearest authorized Viking Range, LLC service agency, call Viking Range, LLC.

IMPORTANT: Retain proof of original purchase to establish warranty period.

Specifications subject to change without notice.

Viking Range, LLC
111 Front Street
Greenwood, Mississippi 38930 USA
(662) 455-1200

For product information,
call 1-888-(845-4641)
or visit our web site at vikingrange.com in the US
or brigade.ca in Canada