This Owner's Manual is provided and hosted by Appliance Factory Parts.

Appliance Factory Parts
Experts in BBQ, Humidifier, & Appliance Parts
1-800-955-7075

Haier HTQ21JABRSS Owner's Manual

Shop genuine replacement parts for Haier HTQ21JABRSS



Find Your Haier Refrigerator Parts - Select From 1148 Models

-------- Manual continues below --------

HAIER

REFRIGERATOR

Service Manual

PART# RF-8888-38

HAIER AMERICA TRADING, LLC
www.haieramerica.com

Table Of Contents

Contents	2
Product Code Explanation And Series Introduction	3
Specification	4
Safety Precautions	5
Parts And Functions	9
Function Schedule	10
System Flow Chart	11
Circuit Diagram	12
Maintenance And Troubleshooting	13

Product Code Explanation And Series Introduction

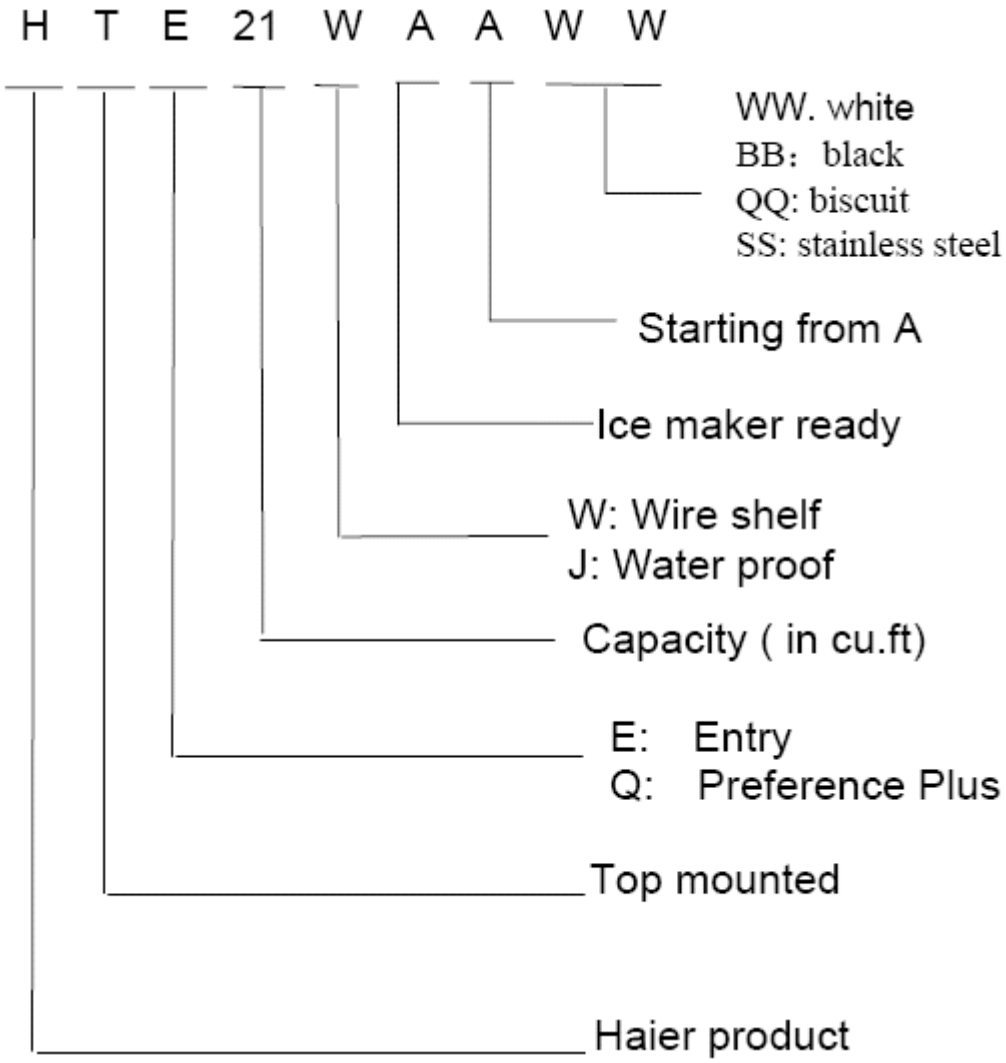

Specifications

Models	HTE21W	HTQ21J
Net capacity (Ft^3)	20.7	20.7
Color	WW: white BB: black QQ: biscuit SS: stainless steel	WW: white BB: black QQ: biscuit SS: stainless steel
Power Supply (V/Hz)	115~/60	115~/60
Rated Input Power (W)	/	/
Power Consumption (kW.·h/24h)	1.40	1.40
Net Weight (lbs)	247	247
Gross Weight (lbs)	265	265
Unit Dimension (D*W*H) (inch)	33 x 31¼ x 65 7/8	33 x 31¼ x 65 7/8
Packing Dimension (inch) (D*W*H)	35 x 34 7/16 x 66 7/32	35 x 34 7/16 x 66 7/32
Container Quantity 40'HC (PCS)	42	42

SAFETY PRECAUTIONS

WARNING!

This appliances uses 115V~/60Hz AC for power supply.
Voltage has excessive variations, which is likely to prevent malfunctions like abnormal noise by processor. It is advisable to use a 750-voltage regulator or a higher power voltage.



WARNING!

It is advisable to use a separate, dedicated and secured grounding outlet.
Power cable is filed with three core (grounding) plugs complying with three core grounding outlet. In no case should the third plug pin (grounding) of the power cable be removed.

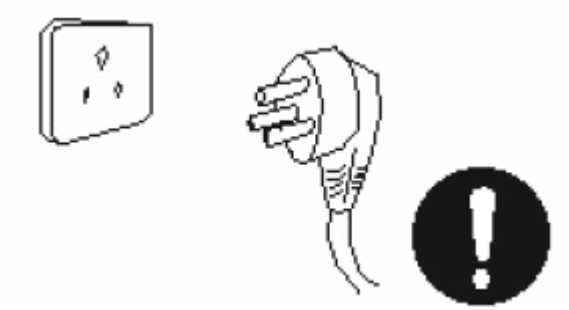

WARNING!

Do not damage power cable.

Be sure not to unplug unit by power cable. Hold plug firmly to unplug

Do not let the body of the unit have contact or press power cable. Take care of power cables to avoid damage when moving unit.

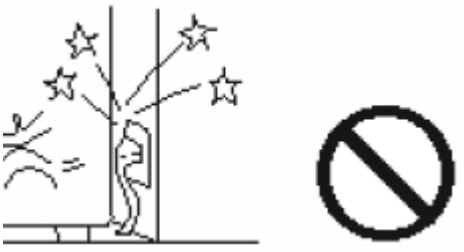

WARNING!

In case the power cable is damaged.

Worn out cables should not be used.
Replace such damaged cables.

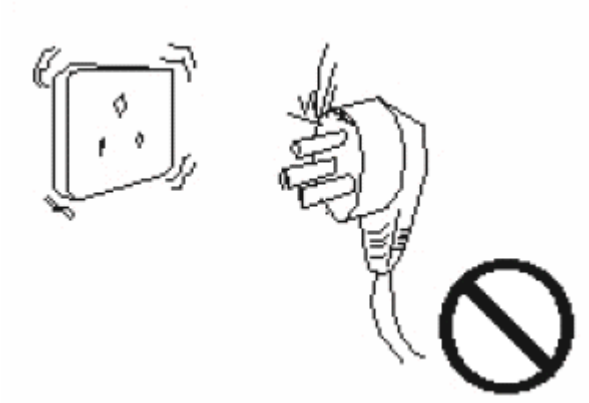

WARNING!



In the case of the leakage of an inflammable gas

1. Access leaking area.

2. Open door and windows.

3. Do not temper with unit or plug any electrical device such as refrigerator.

WARNING!



Unplug power in these situations

1. Unplug unit prior to cleaning or repairing.

2. Unplug unit before replacing damaged Lamp to prevent electrical shock.

WARNING!

It is not advisable or prohibited to keep hazardous, inflammable or explosive items like acid or alkali into refrigerators.



WARNING!

Do not keep medicine, vaccines or chemical reagents in refrigerator. This refrigerator is household use and cannot store items with strict temperature requirements.



Do not place any electrical plugs, regulators or microwaves on top of the refrigerator. Do not use any other electric appliance (except the one the manufacturer has stated) inside the refrigerator.



Do not store or use gasoline or other flammable substances in the vicinity of the refrigerator to avoid fire outbreak.



WARNING!
Do not play with the door to avoid damage.



WARNING!
Do not keep heavy objects on refrigerator.



WARNING!
Do not touch refrigerator with your wet hands when it is in operation to avoid your hand form getting stuck to the freezer.



WARNING!
Do not spray water onto the unit or install unit at a wet place to avoid interferences with the power source.



WARNING!
Do not temper with refrigerator when you do not have any technical know how. Seek professional advice in case the refrigerator gets damaged.



WARNING!
Do not keep bottled items in the freezer compartment to avoid frost crack.



WARNING!
Unplug power supply when carrying out cleaning. Switch power on 5 minutes after to prevent any damage.



WARNING!
Dismantle door and door gasket
before disposing off a refrigerator to avoid damag unsuspecting persons or children

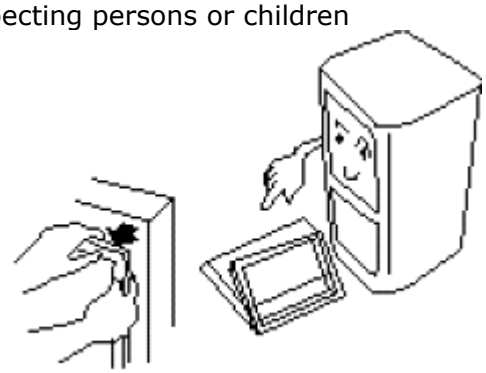

Parts and Functions

3-1. Description of Components

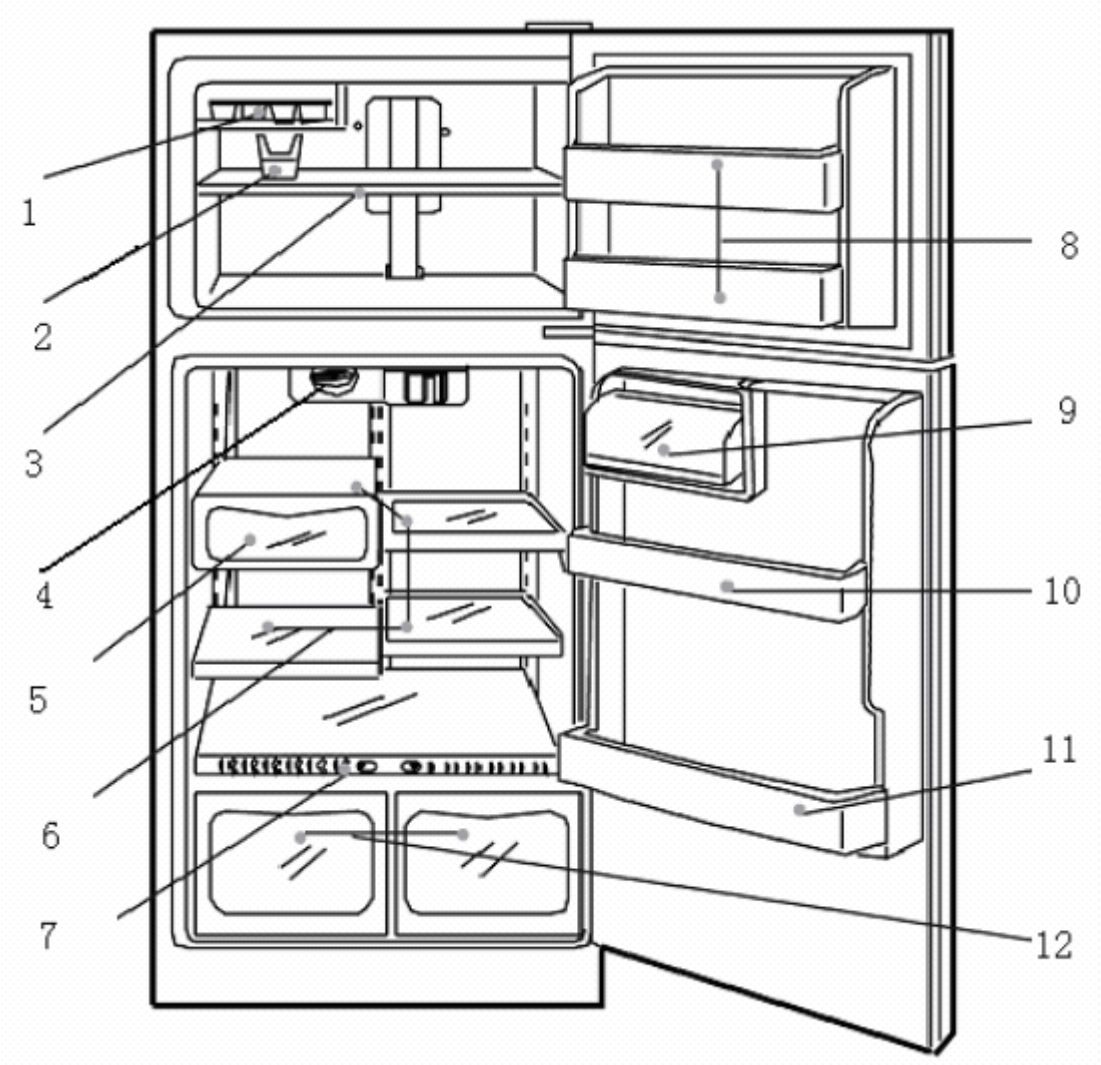

1. Ice Making Ware
2. Ice Storage Box
3. Wire Shelf
4. Refrigerator Lamp
5. Snack Ware
6. Cantilever Shelf
7. Humidity Adjusting Slide
8. Door Rack
9. Egg Tray
10. Bottle Rack
11. Tall Bottle Rack
12. Humidity Maintaining Box

Function Schedule

1. Air-cooling and automatic defrosting
2. Round door design and fashion handles
3. Energy-saving
4. Adjustable humidity crisper
5. Isolated food shelf
6. Crisper with adjustable moisture

Moisture in the crisper can be adjusted for satisfaction of vegetables and fruits storage

System Flow Chart

1. Schematic Diagram Of System Flow Chart

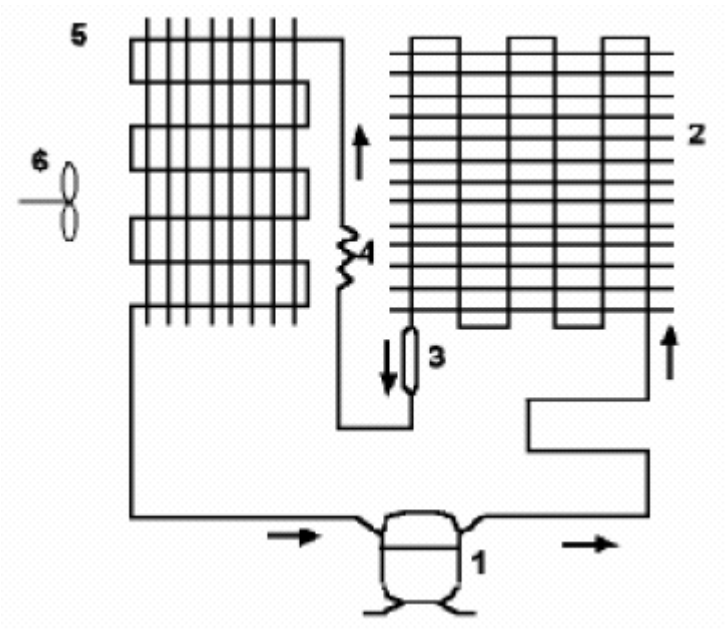

1. Compressor
2. Condenser
3. Dry Filter
4. Capillary Tube
5. Evaporator
6. Air Fan

2. Cold Air Flow

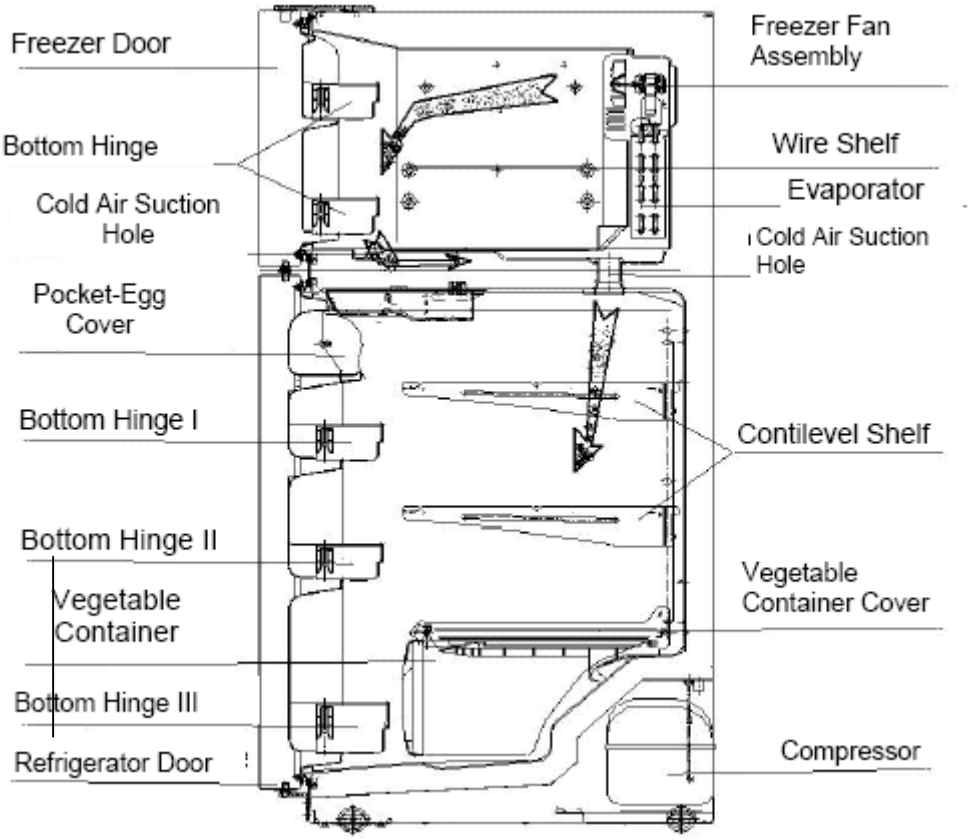

Circuit Diagram

1. Schematic Circuit Diagram

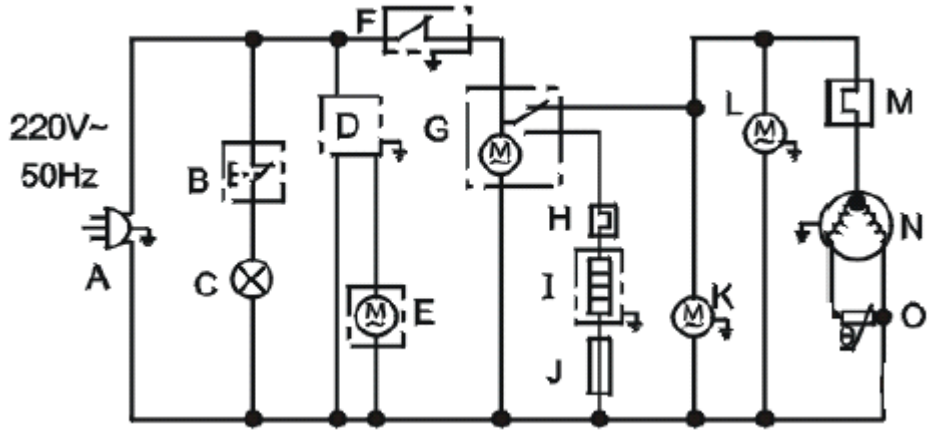

A. Plug
B. Switch
C. Lamp
D. ICE Maker (Preparative)
E. Valve (Preparative)
F. Thermostat
G. Defrost Timer
H. Thermostat
I. Defrost Heater
J. Fuse
K. Fan
L. Fan
M. Overload Protector
N. Compressor
O. PTC

Brief Description of Control Principle

HTE21/HTQ21 are forced air-cooling refrigerators with two doors. A mechanical type of all the control is generally adopted. The thermostat directly controls the start and stop of compressor, and hence the refrigerator temperature.

Low Temperature Compensation in the above schematic diagram. When the ambient is below the set temperature, the switch will be closed and the heating will work, thus ensuring the normal start, and operation of refrigerator at lower ambient temperature, in such case, the freezer compartment temperature can reach a good point.

Maintenance Service And Troubleshooting

1. When the refrigerator does not get cold at all

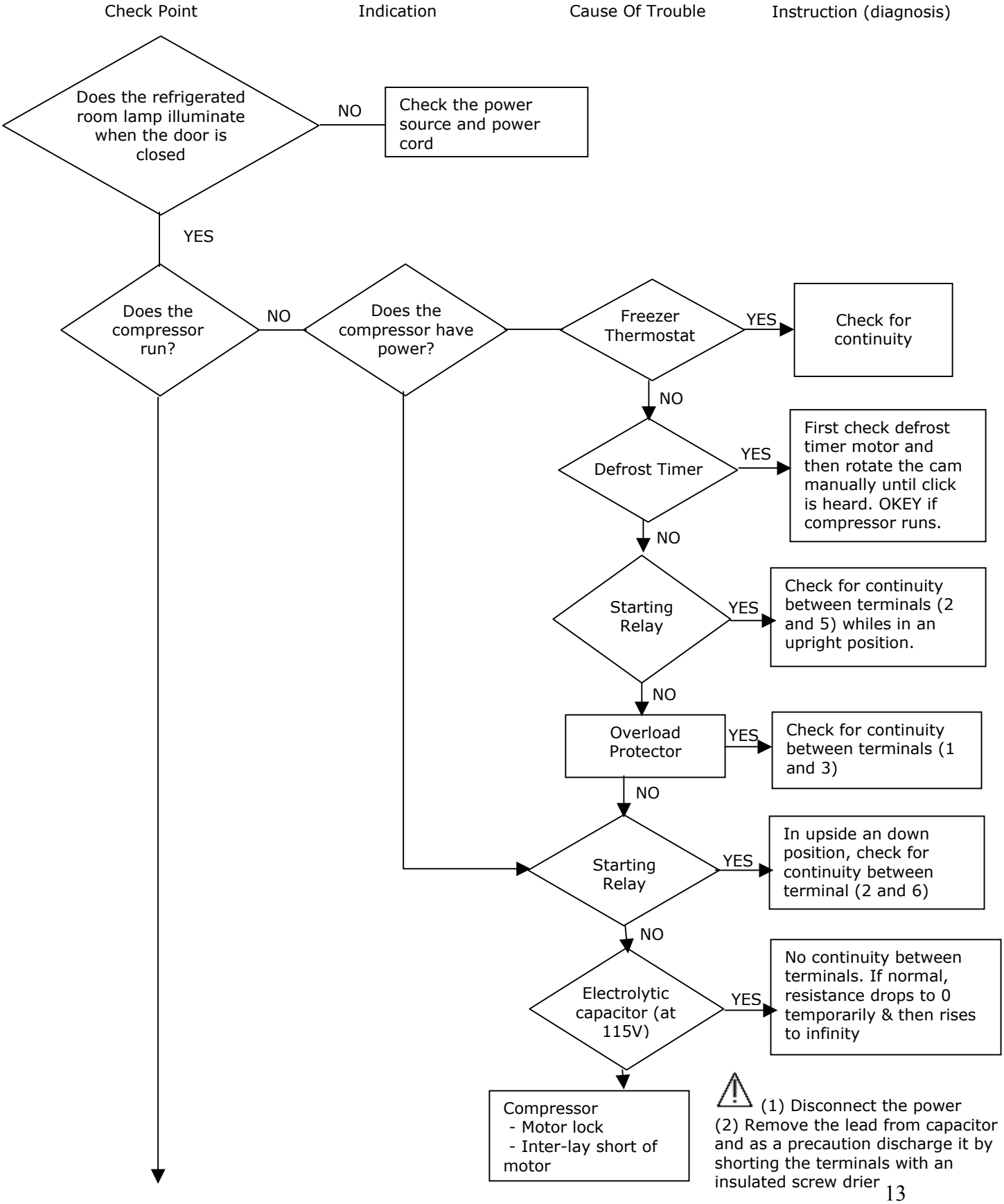

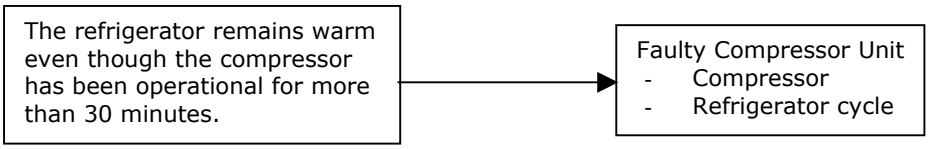

3. No Defrosting

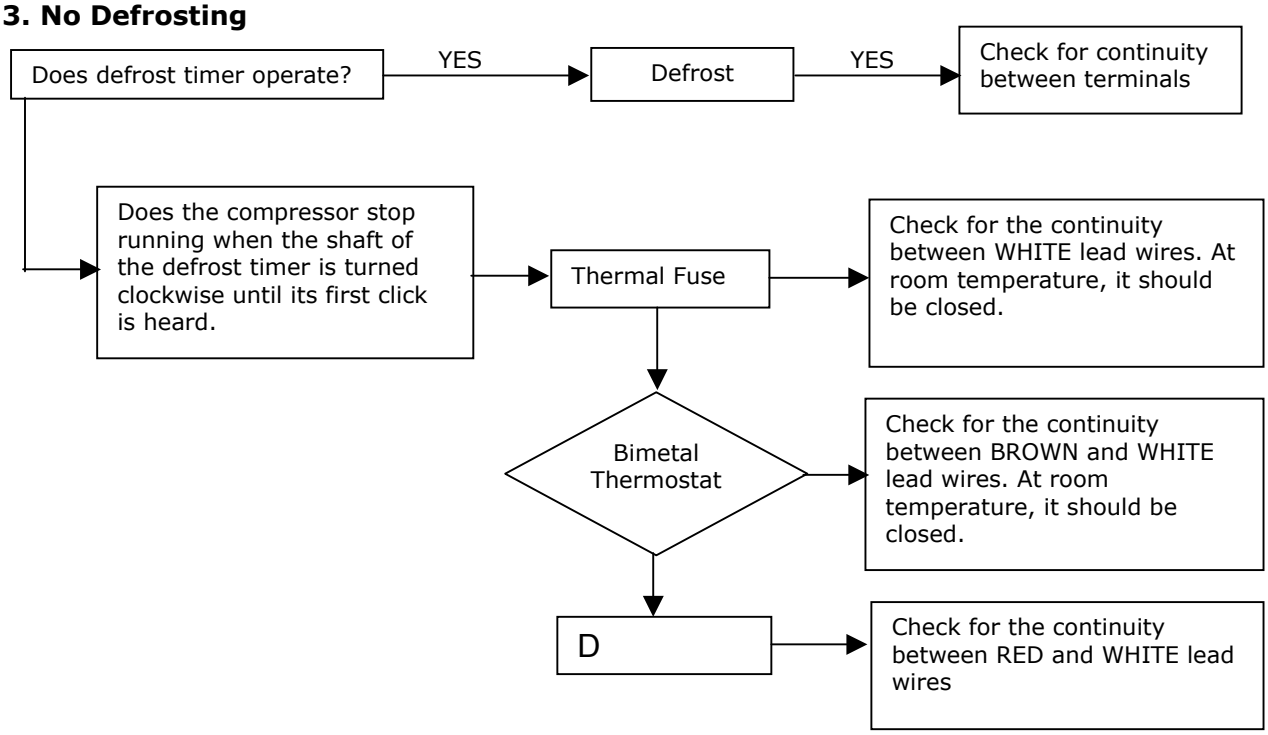

The Freezer And Refrigerator Rooms Are Not Sufficiently Cold

Check Point	Indication	Cause Of Trouble
Instruction (Diagnosis) - Does the processor operate? - Is refrigerator installation distant from direct heat? - Is the condenser radiating efficiently? - Is there any hot foodstuff in refrigerator? - Excessive foodstuff stored or interference with cold air circulation - Is temperature control knob in suitable position? - Is the gasket sealing in good condition?		

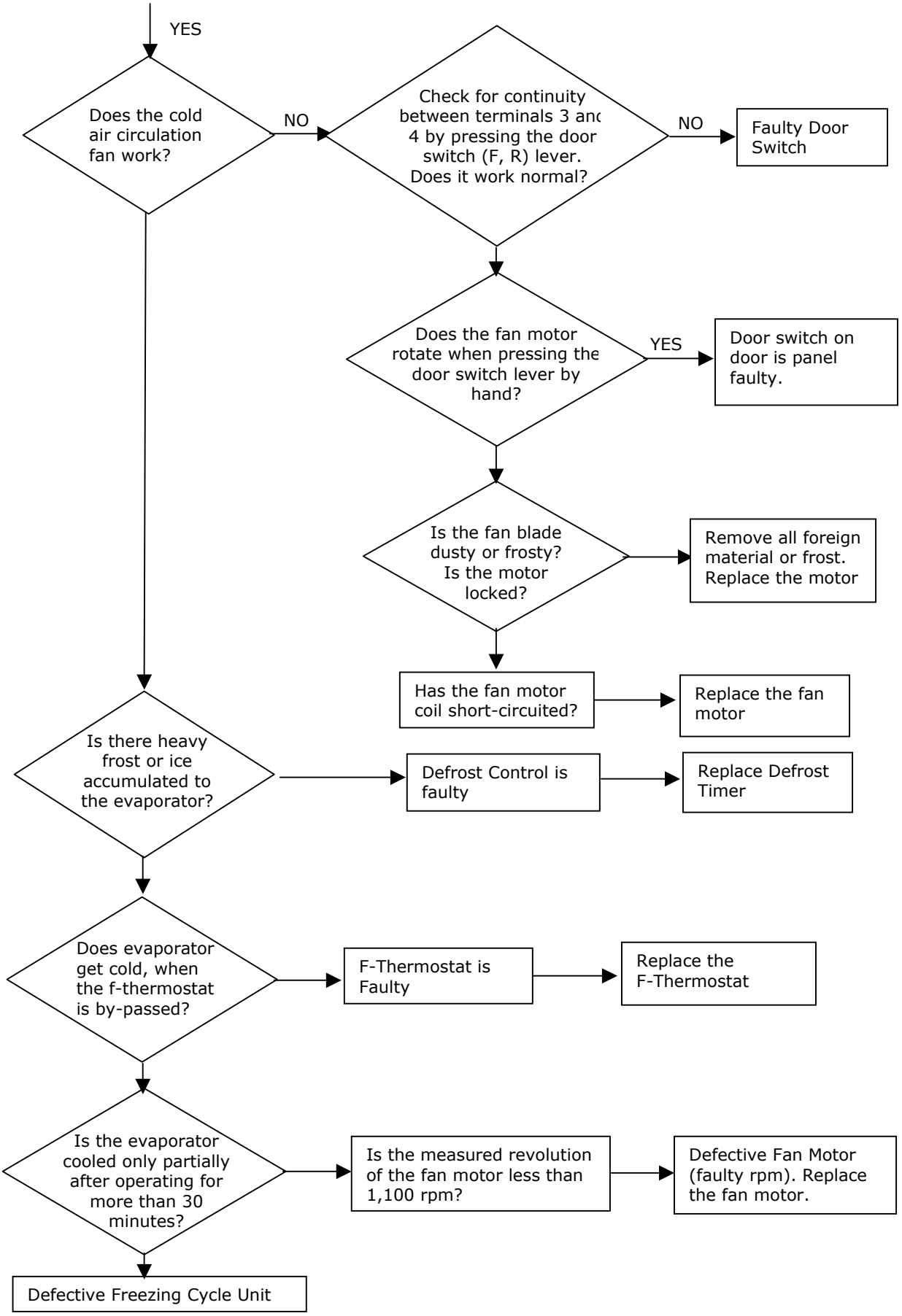
YES
Does the cold air circulation fan work?
NO
Check for continuity between terminals 3 and 4 by pressing the door switch (F, R) lever. Does it work normal?
NO
Faulty Door Switch
Does the fan motor rotate when pressing the door switch lever by hand?
YES
Door switch on door is panel faulty.
Is the fan blade dusty or frosty? Is the motor locked?
Remove all foreign material or frost. Replace the motor
Has the fan motor coil short-circuited?
Replace the fan motor
Is there heavy frost or ice accumulated to the evaporator?
Defrost Control is faulty
Replace Defrost Timer
Does evaporator get cold, when the f-thermostat is by-passed?
F-Thermostat is Faulty
Replace the F-Thermostat
Is the evaporator cooled only partially after operating for more than 30 minutes?
Is the measured revolution of the fan motor less than 1,100 rpm?
Defective Fan Motor (faulty rpm). Replace the fan motor.
Defective Freezing Cycle Unit

4. NORMAL REFRIGERATOR FUNCTIONS

A domestic refrigerator is comprised of an electric control system and a refrigerating system. Since both systems work together, it is difficult to tell whether the refrigerating system is in good working condition. If any part of the refrigerating system or electric control does not work properly; the refrigerator's efficiency will decline, operating properties will destabilize, and in worst cases, it will not function at all.

Sending refrigerators to a service department can be difficult since they are generally large. At times, normal phenomena are incorrectly diagnosed as troubles. Before we deal with the recurrent problems of refrigerators, here is a brief outline of normal occurrences that should not be considered as problems. If any of the occurrences listed below happens, you can continue to use your refrigerator:

a) Rumbling Sounds

When the compressor of a refrigerator stops running, a rumbling sound will be heard from the evaporator. This sound is caused by the flow of refrigerant in the evaporator tube. The refrigerant flows shortly after the compressor has stopped running. This sound, therefore, does not constitute a problem.

b) Clicking Noises

Refrigerators often make clicking noises. This is also normal. It is the result of the intake or release of the armature of a current dead weight start relay when the compressor is started. The compressor motor makes a clicking sound while it is running. This sound is faint in the daytime but becomes louder at night.

c) Hot Refrigerator Parts

The compressor consists of an electric motor and a compressing apparatus. During its normal operation, the temperature of the motor's starter core and windings will range between 212°F-230°F. The temperature of the piston and cylinder of the compressing mechanism is normally 212°F due to the heat produced when compressing the refrigerant. Most of the heat radiates through the compressor casing to the air, therefore the temperature of the casing is generally between 185°F and 194°F. It becomes extremely hot, particularly in summer when the ambient temperature is higher than usual.

All these are normal phenomena.

d) Crackling Sounds

For the direct cooling refrigerator, an irregular crackling sound is caused by expansion and contraction of the compressor. This sound will not affect the normal operation of the refrigerator.

1. COMMON PROBLEMS OF A REFRIGERATOR AND THEIR SOLUTIONS

Refrigerator problems are closely related to the quality of components, level of workmanship, and owner maintenance. The parameters generally used to determine the working conditions of a refrigerator include the temperature inside the refrigerator, the operating rate, electrical power consumption, noise level, and other functional indices. If any of these indices passes their permissible range, there is a fault with the refrigerator.

During the entire service life of a refrigerator, the probability of problems occurring within a specific time is called its failure rate. A comparison between the control circuit system of a refrigerator and its refrigerating system indicates that the failure rate of the former is higher. When troubleshooting, the first thing you must do is to determine whether the source of the problem is the control system or the refrigerating system.

There is usually no troubleshooting instrument for the domestic refrigerator. The location and nature of problems must therefore be determined according to their respective features. Experience in servicing is very important for troubleshooting. Well-experienced service technicians can correctly identify and solve problems based on their comprehensive analysis of the characteristics of the particular problems as well as the operating conditions for various kinds of refrigerators.

- Three Essential Things To Note During A Checkup

➢ **Look**

a) Check the tubing of the refrigerating system for cracks and various welding points for leakages. If there is a leakage, a distinct oil stain will be seen.

b) Check the suction and the exhaust pressure valves (high pressure and low pressure) of compressor to see whether they are normal.

c) Pay attention to the rate at which the temperature decreases in both the refrigerator and freezer compartments.

d) Check the environment to see whether it is suitable for the refrigerator.

e) Check refrigerator door seal, case, table surface, and heat insulation layer.

➢ **Listen**

a) Listen to the noises made while the compressor is running. During the normal operation of compressor, a slight and uniform humming sound due to undulation of electric currents will be heard. The sounds listed below indicate a malfunction.
   i. *Humming sounds* from a fully enclosed aggregate unit indicate that the motor was not started properly.

ii. *Clattering sounds* from the start relay indicate that the start contacts cannot be released normally.

iii. *Whistling sounds* indicate the release of high-pressure gas from a crack in the pressure tube inside the compressor.

iv. *Clucking sounds* indicate that the suspended spring inside the compressor has broken

v. *Knocking sounds* from inside the compressor indicates that a large quantity of moist refrigerant vapor or refrigerating oil has linked into the compressor cylinder.

vi. *Striking sounds* from metal parts inside the compressor indicate that moving parts are loose.

b) Listen to the gas flowing in the evaporator by opening the refrigerator door while the compressor is in operation. Normally, refrigerant circulating in the evaporator produces a gentle whistling accompanied by a sound similar to water flowing. If only the whistling can be heard and there is no sound similar to water flowing, then the refrigerant has already percolated. If neither sound can be heard, the filter or capillary is clogged.

- **Touch and Feel**

a) Feel the compressor while it is running. Its temperature should be less than 194ºF. Its temperature may exceed 194ºF if it has been running for an extended period.

b) After the compressor has operated for 5~10 minutes, feel the condenser. The temperature of its upper part should be higher than that of its lower part (or its right part is hotter than its left part, depending on the type of condenser coil). This indicates that the refrigerant is circulating properly. If the condenser is not hot, then the refrigerant is leaking. If the condenser is hot for only a few minutes and then cools down, the filter and capillary are clogged. If hot air is blown out of the forced air-cooling condenser, the system is out of order.

c) Feel the filter's temperature. Normally, the temperature on the filter's surface should be a little higher than the ambient temperature. If the filter is lower than the ambient temperature, then the meshes of its screen are clogged. This obstructs the flow of refrigerant and causing a drop in temperature due to throttling.

d) Feel the temperature of exhaust gas from the refrigerating system. The exhaust gas should be extremely hot. If the refrigerator has an enclosed compressor refrigerating system, there should be no frost or condensation on the gas suction tube. However, frost and condensation may appear for a very short time period when immediately after starting the machine.

Do not use only one of the indicators from the checklist above to decipher the state of your refrigerating system. It is advisable to find out two or more

abnormal phenomena, or conduct comprehensive troubleshooting because several kinds of troubles may share a common abnormality.

2. ***ANALYSIS OF PROBLEMS*** **AND TROUBLESHOOTING**

Poor Refrigerating Effect

The "poor refrigerating effect "refers to when the refrigerator operates normally, but does not cool to the temperature indicated by the thermostat. Possible causes are discussed and analyzed below:

1) Refrigerant leaks

Analysis of Problem

The refrigerant's leakage will result in an insufficient refrigerating capacity. This will lead to lower gas suction and exhaust pressure as well as hotter exhaust gas. The exhaust tube will become extremely hot, and the sound of gas flowing from outlet of the capillary will become louder than usual. After shut down, the balance pressure in the system is lower than the saturation pressure corresponding to the same ambient temperature.

Remedy

Locate the refrigerant leak points immediately, and note welding points and parts where the leaks occur. While troubleshooting, pay attention to those parts that are liable to leak, check main connection points for oil seepage and tubing for cracks. After repairing the leak points, refill the refrigerant. If you have problems detecting the leak points, charge the system with nitrogen to help identify leaks. Drain the system of the nitrogen before refill with refrigerant.

2) Too much refrigerant in the system

Analysis of Problem

a) If amount of refrigerant in the system exceeds its nominal capacity, the excess refrigerant will displace the evaporator. This will reduce the heat-dissipation area and decrease the refrigerating efficiency. Malfunctions caused by excess refrigerant are: gas suction and exhaust pressures increase, condenser becomes hotter, the electric current of the compressor rises, frost forms on the evaporator and gas return tube, and the refrigerator temperature drops slowly.

b) If excessive refrigerant has been charged, the liquid refrigerant that cannot evaporate in the evaporator will return to the compressor. This will cause "liquid striking." The liquid refrigerant evaporates and effervesces as soon as it flows into the refrigerating oil at the bottom of compressor. If the condition is severe, foams will cover the inside the compressor housing and be sucked by the piston, causing damage to the components of compressor.

Remedy

According to the operating procedures, it is mandatory to turn the machine off. After several minutes, open the refrigerant charging tube and let the refrigerant escape from it, replace the dry filter, refill the refrigerant after evacuating, and then seal the charging port.

3) There Is Air Left In The Refrigerating System

Analysis of Problem

Residual air in the refrigerating system will reduce its refrigerating efficiency. Major effects are an increase in temperature of the segment from the compressor outlet to the condenser inlet and an increase in gas suction and exhaust pressures. However, the gas exhaust pressure will not exceed its rated value. Due to the air in the system, both the gas exhaust pressure and temperature will rise. In addition, the sound of gas flowing will become intermittent and louder.

Remedy

Turn off the refrigerator, and wait for several minutes. Next, open and evacuate the tubing. Then refill the system with refrigerant.

4) Low efficiency of compressor

Analysis of Problem

Low efficiency of a refrigerating compressor refers to the actual reduction of gas discharge capacity and the corresponding reduction of refrigerating capacity under the condition that the refrigerant in the system is unchanged. This typically occurs when the compressor has been is use for a long time.

Remedy

Measure the high and low pressures with pressure gauges to see whether they are normal. If an abnormal sound comes from the compressor or the temperature of its causing is too high, cut the discharge port open and operate the compressor. Inspect to see if there is pressure at the discharge port with your finger. In a normal compressor, it is difficult block the discharge port with your finger.

5) Too thick frost layer formed on evaporator

Analysis of Problem

If a direct cooling refrigerator is to be used for a prolonged period, make sure that you defrost its evaporator regularly. If you fail to do so, the frost layer on the evaporator tubing will become thicker and thicker. Heat conduction will be severely affected when the whole tubing is wrapped with a transparent ice layer, and finally the temperature in the refrigerator cannot fall to the prescribed range.

Remedy

Turn the refrigerator off and prepare for defrosting. Open the refrigerator's door to let air inside or use a fan to speed up air moving into the refrigerator to quicken the defrosting process. Never strike the frost layer with any iron tools or wooden stick in order not to damage the evaporator tubing**.**

6) Refrigerating oil in evaporator tubing

Analysis of Problem

During the refrigerating cycles, small amounts of refrigerating oil may remain in the evaporator tubing. However, if there is considerable refrigerating oil left in the evaporator after an extended period of operation, the heat conduction effect will be severely affected. The result is poor refrigerating effect.

Remedy

If there is no frost on the evaporator, then there is a high probability that the deterioration of refrigerating effect is due to the accumulation of refrigerating oil in the evaporator tubing. Remove accumulated refrigerating oil, dismantle the evaporator, purge it thoroughly, and then dry it. If it is difficult to dismantle, fill the evaporator tubing with refrigerant from the evaporator inlet several times to remove the refrigerating oil. Then, purge and dry it with nitrogen.

7) Flow Obstructed In Refrigerating System

Analysis of Problem

If the refrigerating system was not purged thoroughly, the filter screen meshes become clogged by dirt. This results in a decrease in flow rate and a poor refrigerating effect. The effects of clogged filters included: decrease of gas discharge pressure, the drop in the temperature of discharged gas, and, for severe cases, condensation and frosting may appear.

Remedy

Purge the tubing. After replacing the dry filter or cleaning it thoroughly, refill the system with refrigerant and seal the charging port.

- **No Refrigeration**

"No refrigerating" refers to a situation where the compressor runs normally, but the refrigerator's temperature does not decrease. While servicing, careful attention will be required to find and correct the cause. The most common causes for this malfunction are analyzed below.

1) The Entire Refrigerant Has Leaked

Analysis of Problem

Leak points in the refrigerating system have not been found and repaired timely, allowing refrigerant to leak completely. There are two kinds of leaks: slow leaks and fast leaks. Symptoms of total leakage of refrigerant are:

i. The compressor can be started easily (if there is no damage to the compressor parts)

ii. The operating current becomes low

iii. The gas suction pressure increases

iv. The discharge pressure decreases

v. The temperature of the gas discharge tube drops

vi. There is no sound of gas eruption from the liquid in the evaporator, and

vii. No gas gushes out of the process tube when cut after shutdown

Remedy

Check the whole machine, particularly those locations which are liable to leak. After leak points have been found, repair them or replace them with new parts according to specific circumstances. Then evacuate the system and finally charge refrigerant.

2) **Refrigerating System Is Clogged With Ice**

Analysis of Problem

This is typically a result of a poor dryness treatment, improper air purging, or substandard water content. The symptoms of this condition are:

- Irregular refrigeration, extreme frosting at the clogged area,

- Evaporation temperature drops below 0°C or 32°F,

- Water accumulates and gradually clogs the narrow part of the capillary,

- Frost to melt at the evaporator, there is no sound of gas flowing,

- The gas suction pressure becomes a vacuum.

Note that these phenomena will appear intermittently. In order to know whether the system is clogged with ice, heat the parts that are suspected with hot water. If the sound of gas flowing is heard and the gas suction pressure rises, the trouble is that the system is clogged by ice.

Remedy

If there is too much moisture in the refrigerating system, release the refrigerant, purge the tubing with nitrogen, and then refill the system with the filtered refrigerant. Another method is to connect a filter with moisture absorbers, such as silica gel or anhydrous calcium chloride, to the refrigerating system. Next, replace the filter, evacuate it again, and fill the system with refrigerant.

3) **Refrigerating System Is Clogged With Dirt**

Analysis of Problem

Coarse-grained dirt and refrigerant oil in the system tend to settle and clog the capillary inlet. Flow of refrigerant stops when the filter screen is completely clogged by dirt. This condition has the same symptoms as when the refrigerating system is clogged by ice. However, when you heat the clogged area with a hot towel, there is no reaction. After rejecting the possibility of ice clogging, it can be concluded that the clogging is due to dirt.

Remedy

Dismantle the system. Remove the dry filter and purge the tubing with nitrogen. Next, install a new filter. Then evacuate it and fill with refrigerant.

4) **Clogged Filter**

Analysis of Problem

The complete clogging of the filter rarely occurs. Oftentimes, there is an accumulation of paste-like matter formed from dust on the filter. Tapping the filter may remove part of the paste-like matter. When the filter is clogged, it will be cooler than normal.

Remedy

The same as described for the capillary clogged with dirt.

Compressor Problems

1) Broken Gas Suction And Discharge Valve Blocks

Analysis of Problem

The compressor works by opening and closing the gas suction valve and discharge valve to suck and discharge the refrigerant. If the valve block is broken, the refrigerant cannot be discharged. This prevents refrigeration.

Remedy

It is quite difficult to differentiate this trouble from others because they have similar symptoms. When repairing, listen attentively for abnormal sounds coming from the compressor. Oftentimes, broken pieces of valve block strike against the cylinder. Check to see if the compressor casing is too hot. Secondly, measure the pressures at the high and low-pressure ports of the compressor with pressure gauges. If the gas suction valve block is broken, the suction pressure gauge pointer will swing violently and the suction pressure will be very high. Whereas when the gas discharge valve block is broken, the discharge pressure gauge pointer will swing drastically and the discharge pressure will be very high. In both cases, stop the compressor at once. If possible, open the cylinder cover, check the valve block, and repair it.

❖ Compressor suddenly stops

Very often, when the compressor suddenly stops, the gas suction pressure and/or discharge pressure have exceeded their respective prescribed ranges. When this happens, the pressure-operated protective relay automatically shuts off the power to the compressor. Below we discuss the reasons for high gas discharge pressure and low suction pressure.

➢ Stoppage due to excessively high gas discharge pressure

1) High gas discharge pressure due to excess refrigerant

Analysis of Problem

Loose frosting and poor refrigerating effect may occur if excessive refrigerant has been charged into the system. Excess refrigerant will occupy additional space in the evaporator.
This will reduce its heat dissipating area, and the phenomenon of "liquid striking" may occur. Condensation may occur on the gas return tube, and the gas discharge pressure will rise.

When it reaches the threshold value, the protective relay will actuate and shut off the power supply to the compressor.

Remedy

Open the tubing. Re-evacuate and charge the system with a proper quantity of refrigerant.

2) Air In The System

Analysis of Problem

The residual air in the system will circulate with the refrigerant in the system. The major symptoms are higher gas discharge pressure, higher discharged gas temperature, and poor refrigerating effect. The gas discharge pressure will exceed its maximum value when the compressor has run for an extended period, and activates the protective relay.

Remedy

Check the air has been in the refrigerating system. Generally, there are three possibilities. First, is that the air has been sucked into the system during repairs due to carelessness. Secondly, it has not been completely purged evacuating the system. The third possibility is that there are leak points at the low-pressure end of the refrigerating system. Leak points appear in low temperature parts or assemblies. This is because the evaporation temperature is lower for such low temperature devices, especially at the low-pressure end; it is easier for the air to go into the system. Once it has been ascertained that air does exist in the system, you have to open the tubing, re-evacuate it and then charge it with refrigerant.

Stoppage Due To Electrical Problems

- **Thermostat is out of control due to electric troubles**

Analysis of Problem

In case the thermostat does not work in its good order or its temperature sensor has not been installed properly, frequent stoppage is also likely to occur.

Remedy

Try to adjust the temperature sensor's position until the compressor can be started and stopped normally. If this cannot be achieved, and the stoppage still occurs repeatedly, it is most likely that the mechanical parts or contacts are out of order, disassemble the thermostat, make a thorough checkup and repair it.

❖ **Overload of electric motor**

Analysis of Problem
Probably, too many things have been put into the refrigerator, and hence the thermal load exceeds its refrigerating capacity; or in case the power supply voltage drops considerably, the current flowing through the motor will increase drastically making the thermal protector actuate and the fuse blown, and hence the motor stops running. If the motor is still running continuously in such a case, its windings will be burned out.

Remedy
Reduce the thermal load, pay attention to the variation in voltage of the power supply.

❖ **Abnormal thermal protection**

Analysis of Problem
The compressor current is within its normal range, but the thermal protector actuates repeatedly.

Remedy
Replace the thermal protector with a new one.

➢ **Sudden stoppage due to other causes.**

Normal Stoppage
Thermostat generally controls start and stop of the compressor. When the temperature in the refrigerator reaches its desired value, the thermostat will shut down the compressor automatically. Never take this normal operation as a problem; care should be taken to differentiate it from other real problems in servicing.

❖ **Compressor won 't start.**
In case the compressor cannot be started, you must find out the origins of this trouble through systematic checkup, because probably there are many causes, including the electrical and mechanical parts.

A) Inspect The Power Supply To See Whether It Is Connected To The Compressor Circuit.

Analysis of Problem
In case the compressor cannot be started, this will generally exhibit in the power supply circuit, for instance, power failure, poor contact of switch, and blown fuse. Make a comprehensive analysis of these phenomena, find out its real cause and take corrective measures to resolve the problem.

Remedy

i) Check the input power circuit to see whether there is voltage in the power supply, **note:** the circuit that is connected to the knife switch. This can be determined with a voltmeter or a test pencil. If a blown fuse is found, ascertain and remove its cause, then replace it with a new one of the same specifications.

ii) Check the compressor accessories, including its thermal protector and relay. In case the thermal protector is damaged, the compressor cannot be powered on. If the relay is out of order, the motor will not run and hum sound can be heard from it after the compressor is turned on. In that case, shut it down immediately, otherwise, the motor windings will be burned out in case this condition lasts longer.

iii) Check the relay contacts and plugs to see if they are perfect and work reliably. Poor contact may cause the motor not running or humming.

B) Check The Circuit Voltage To See Whether It Is Normal

Analysis of Problem

If the circuit voltage is obviously lower than its rated value, it will be difficult to start the motor, and a hum sound can be heard from it.

Remedy

Measure the voltage with a voltmeter; if it is really too low, give directions to the user for buying a stabilizer to step up the voltage, thus normal operation can be achieved.

C) Check The Thermal Relay To See Whether Its Contacts Are Closed.

Analysis of Problem

The contacts of thermal relay sometimes may be open due to the leakage of temperature sensing agent from the temperature sensor.

Remedy

Remove the relay cover to check up its contacts. If they are open, this means that the original setting is not properly set or temperature-sensing agent has leaked out of the temperature sensor. Try to turn the adjusting stem of this value in the direction of the lower temperature graduation, and then check the contacts to see whether they are closed. If they are still not closed, dismantle the temperature-sensing disc and then immerse it into warm water to see whether the contacts actuate. If not, it can be preliminarily determined that temperature-sensing agent has leaked out, and it must be replaced with a new thermostat.

D) Problems Of Motor And Other Electrical Faults

i) **Motor Windings Are Damaged Or There Is A Short Circuited Between Turns**

Analysis of Problem

When motor windings are damaged or there the occurrence of a short circuit between turns, the fuse will be blown repeatedly, and the blowout particularly occurs at that instance where you close the knife switch.

Remedy

Check the terminals and the outer casing to see whether they are short-circuited, and measure the resistance of each phase with an avometer. If short circuit occurs or the resistance of a particular phase is low, this means that there is no short circuit in the windings and/or between turns, and that insulation layers are damaged or deteriorated. Another instrument that can also be used in this inspection is a megameter. If the insulation resistance is lower than 2 MΩ, this means that the insulation layer has a breakdown already. If the motor is damaged, repair or replaced it with a new one.

ii) Control Relay Is Faulty

Analysis of Problem

Overheating, burns or wearing of control relay contacts will generally occur if this is true. All these will cause poor contact in electricity.

Remedy

Dismantle it for repairs, or replace it with a new one.

iii) Poor Electric Contractor In Thermostat

Analysis of Problem

Damaged contractor and leakage of temperature sensing agent will generally occur if this is true.

Remedy

Replace the old one with a new one.

iv) **Check the terminals for loose connection and electric circuits for other abnormal phenomena.**

e) **Mechanical Faults Of Compressor**

i) Shaft Seizure

This is normally caused by poor lubrication, insufficient quantity of lubricant, clogging in the lubricant oil's line, or intermittent lubricant oil supply. Dirt and other impurities in the lubricant will increase its viscosity and cause the shaft to be seized. Copper plating may also result in the seizure of the shaft.

ii) Piston Seizure

This happens because the fit clearance between the piston and cylinder is too small or expansion due to heat.

iii) **How do you know that the shaft and piston have been seized**
When the refrigerator is switched on, the compressor will not start running. A slight hum sound will be heard and several seconds later, the thermal protective relay will actuate and open the contacts. This process will occur repeatedly, but the compressor will not start.

❖ **Compressor Will Not Stop**
Sometimes, the compressor will run continuously (for several hours or run without end).
If the food placed in the refrigerator is not too much, there may be the following two situations:

i) Control system is probably out of order

ii) The control system works normally but there are problems in the refrigerating system or other parts

a) Temperature Is Set Improperly

i) The temperature control knob is set to the "coldest" position. This position is to be used for fast freezing or continuous running, its temperature for power off is too low, therefore, the compressor will not stop and the temperature in the refrigerator becomes lower and lower.

ii) Inspection method: check the temperature control knob to see whether it is set in the position "coldest".

b) Thermostat Is Malfunctioning And Makes The Compressor Running Continuously

Analysis of Problem
When the thermostat does not work normally, it will make the compressor run continuously, and hence very low temperature will be achieved in the refrigerator. The fault is generally because the contacts of the thermostat cannot be released.

Remedy
Dismantle the thermostat and make a through checkup. If it is totally out of functioning, replace with a new one.

C) Evaporation Temperature Is Too High In Refrigerating System, Resulting In Lower Refrigerating Capacity And Hence Continuous Running Of Compressor

Analysis of Problem
Leakage of refrigerant and clogging in a refrigerating system will directly affect its refrigerating capacity. Due to the reduction in its refrigerating capacity, the refrigerator temperature cannot reach its rated value. The thermostat will not work, thus the compressor runs continuously. When the evaporation temperature in the system is too high, the temperature sensing agent in the temperature sensor is also hotter therefore, the thermostat is unable to cut off the power supply to the compressor and stop it.

Remedy
If it has been found that the refrigerant in the system is insufficient in quantity, recharge it with refrigerant. In case clogging occurs, disassemble the part where it is blocked. If the evaporation temperature is too high, settle this problem with an appropriate quantity of refrigerant.

D) No Stoppage Of Compressor Due To Damaged Heat-Insulation Layer Inside Case Body And / Or Door Seal

Analysis of Problem
When the heat-insulation layer inside the case body deteriorates or the door seal does not closely touch the doorframe, the temperature in the refrigerator will rise and makes the compressor run continuously.

Remedy
Check the heat-insulation layer for damaged parts. Repair it if damaged to improve its heat-insulation property. If the door has deformed or the door seal is not tightly sealed against the case body, repair them.

e) Too much food is placed in the refrigerator, or is placed too densely, resulting in poor ventilation or poor conditions for temperature sensing hence no stoppage of the compressor.

f) Too high ambient temperature, poorer ventilation and heat dissipation make the compressor run without stopping.

❖ **Electric Leakage Of Refrigerator**

a) Slight Electric Leakage
Electric insulation has deteriorated due to being affected with damp, thus resulting in slight electric leakage.

b) Serious Electric Leakage
Refrigerator case has become live due to faults occurred in some electric devices or the erroneous wiring in installing power cord plug or outlet by the user. This is very dangerous.

c) Electric Leakage Test

i) **Slight Electric Leakage**
A tingle sense will be experienced as soon as you touch the metal parts of the refrigerator with the hand. When you test them with a test pencil, its neon lamp will come on. In that case, the first thing you need to do is to determine whether the grounding is perfect. If the grounding has no problem, turn off the refrigerator immediately, then check the insulation of electric circuits with a voltmeter.

ii) **Serious Electric Leakage**
Do not touch the case body of the refrigerator, its door handle or other metal parts with your hand. When you test the refrigerator with a test pencil, it will light up intensively. Measure the resistance between the power cord plug and the case body with a voltmeter, the reading will be zero (0Ω); in the worse

case, the fuse will blow. Check the 3-prong outlet to see whether the live wire and the null line are inversely connected. One possibility is that the live wire and null line of the outdoor power supply circuit have been inversely connected; this makes the null line become a live wire.

❖ **Stronger Vibration And Loader Noise**

1. Refrigerator Placed Improperly

a. *Uneven Ground*
Uneven ground will cause the refrigerator to be placed unsteadily, causing stronger vibration and noise during its operation.

b. *Leveling screws not properly adjusted*
If the leveling screws on refrigerator legs have not been adjusted properly, vibration and noise will still occur even if the refrigerator has been placed on a level ground.

2. Abnormal Noise From Compressor
Three suspended spring inside the compressor case are out of balance, and strike against the case, moreover, the wear of compressor parts may cause noise sometimes.

3. Resonance Of Tubing And Loosening Of Parts
Improper and compact lying of tubes or the loosening of parts may cause Vibration

4. Inspection Method
To find the sources of noise, press the vibration spot with your hand while the refrigerator is in operation and listen attentively whether the vibration becomes weaker or vanishes. If the refrigerator has not been levelly placed, put a level meter on its top table and adjust the leveling screws on its legs. In case noise occurs from the compressor, strike different locations on the side surface of its case using a rubber hammer or hand hammer with a wood block in between to determine whether the suspended springs are out of balance or being seized.