USER GUIDE & SERVICE MANUAL



Model: UHCR115-SS01B

Tip: Click on any section below to jump directly there

Table of Contents

Intro

Safety

- Safety and Warning
- Disposal And Recycling

Installation

- Environmental Requirements
- Electrical
- Cutout & Product Dimensions
- Side by Side Installation
- Water Hookup
- Anti-Tip Bracket
- General Installation
- Grille Installation
- Door Swing
- Door Adjust

Maintenance

- Cleaning
- Cleaning Condenser
- Extended Non-Use

Operating Instructions

- First Use
- Ice
- Airflow and Product Loading

Service

- Troubleshooting
- Wire Diagram
- Product Liability
- Warranty Claims
- Parts
- Ordering Replacement Parts
- System Diagnosis Guide
- Compressor Specifications
- Troubleshooting Extended
- Defrost
- Replace Ice Maker
- Warranty

WELCOME TO U-LINE

Congratulations on your U-Line purchase! Your product comes from a company with decades of premium modular ice making, refrigeration, and wine preservation experience. U-Line creates products focused on functionality, style, and inspired innovations — paying close attention to even the smallest details. Applications include residential, outdoor, ADA height compliant, marine, and commercial. Product categories include Beverage Centers, Wine Refrigerators, Ice Machines, Refrigerators, Freezers, and Dispensers. Our advanced refrigeration systems, large and flexible capacities, and clean integrated look are what makes our products Built-In to Stand Out®. Since 2014, U-Line has been part of the Middleby family of brands. Products are designed, engineered, and assembled in Milwaukee, Wisconsin, USA, and select products are available worldwide.

U-Line — RIGHT PRODUCT. RIGHT PLACE. RIGHT TEMPERATURE.®

PRODUCT INFORMATION

Looking for additional information on your product? User Guides, Spec Sheets, CAD Drawings, and Product Warranty information are available digitally on u-line.com.

PROPERTY DAMAGE / INJURY CONCERNS

In the unlikely event property damage or personal injury is suspected related to a U-Line product, please take the following steps:

1. U-Line Customer Care must be contacted immediately at +1.414.354.0300.
2. Service or repairs performed on the unit without prior written approval from U-Line is not permitted. If the unit has been altered or repaired in the field without prior written approval from U-Line, claims will not be eligible.

GENERAL INQUIRIES

U-Line Corporation
8900 N. 55th Street
Milwaukee, Wisconsin 53223 USA
Monday - Friday 8:00 am to 4:30 pm CST
T: +1.414.354.0300
Email: sales@u-line.com
u-line.com

SERVICE & PARTS ASSISTANCE

Monday - Friday 8:00 am to 4:30 pm CST
T: +1.414.354.0300
Service Email: onlineservice@u-line.com
Parts Email: onlineparts@u-line.com

CONNECT WITH US

blog

Designed, engineered and assembled in WI, USA

Safety and Warning

NOTICE
Please read all instructions before installing, operating, or servicing the appliance.

Use this appliance for its intended purpose only and follow these general precautions with those listed throughout this guide:

SAFETY ALERT DEFINITIONS

Throughout this guide are safety items labeled with a Danger, Warning, or Caution based on the risk type:

⚠ DANGER

Danger means that failure to follow this safety statement will result in severe personal injury or death.

⚠ WARNING

Warning means that failure to follow this safety statement could result in serious personal injury or death.

⚠ CAUTION

Caution means that failure to follow this safety statement may result in minor or moderate personal injury, property, or equipment damage.

⚠ DANGER

This unit contains R600a (Isobutane) which is a flammable hydrocarbon. It is safe for regular use. Do not use sharp objects to expedite defrosting. Do not service without consulting the "R600a specifications" section included in the User Guide. Do not damage the refrigerant circuit.

⚠ WARNING

Service must be done by factory authorized service personnel. Any parts shall be replaced with like components. Failure to comply could increase the risk of possible ignition due to incorrect parts or improper service.

CALIFORNIA PROPOSITION 65

This product contains chemicals known to the state of California to cause cancer and birth defects or other reproductive harm.

www.P65warnings.CA.gov

⚠ CAUTION

This equipment is to be installed with adequate backflow protection to comply with applicable federal, state and local codes.

Disposal and Recycling

⚠ DANGER

RISK OF CHILD ENTRAPMENT. Before you throw away your old refrigerator or freezer, take off the doors and leave shelves in place so children may not easily climb inside.

If the unit is being removed from service for disposal, check and obey all federal, state, and local regulations regarding the disposal and recycling of refrigeration appliances, and follow these steps completely:

1. Remove all consumable contents from the unit.

2. Unplug the electrical cord from its socket.

3. Remove the door(s)/drawer(s).

Environmental Requirements

This model is intended for indoor/interior applications only and is not to be used in installations that are open/ exposed to natural elements.

This unit is designed to operate between 50°F (10°C) and 100°F (38°C). Higher ambient temperatures may reduce the unit's ability to reach low temperatures and/or reduce ice production on applicable models.

For best performance, keep the unit out of direct sunlight and away from heat generating equipment.

In climates where high humidity and dew points are present, condensation may appear on outside surfaces. This is considered normal. The condensation will evaporate when the humidity drops.

⚠ CAUTION

Damages caused by ambient temperatures of 40°F (4°C) or below are not covered by the warranty.

Electrical

⚠ WARNING

SHOCK HAZARD — Electrical Grounding Required. Never attempt to repair or perform maintenance on the unit until the electricity has been disconnected.

Never remove the round grounding prong from the plug and never use a two-prong grounding adapter.

Altering, cutting or removing power cord, removing power plug, or direct wiring can cause serious injury, fire, loss of property and/or life, and will void the warranty.

Never use an extension cord to connect power to the unit.

Always keep your working area dry.

NOTICE

Electrical installation must observe all state and local codes. This unit requires connection to a grounded (three-prong), polarized receptacle that has been placed by a qualified electrician.

The unit requires a grounded and polarized 115 VAC, 60 Hz, 15A power supply (normal household current). An individual, properly grounded branch circuit or circuit breaker is recommended. A GFCI (ground fault circuit interrupter) is usually not required for fixed location appliances and is not recommended for your unit because it could be prone to nuisance tripping. However, be sure to consult your local codes.

See CUTOUT & PRODUCT DIMENSIONS for recommended receptacle location.

Cutout & Product Dimensions

PREPARE SITE

Your U-Line product has been designed for either free-standing or built-in installation. When built-in, your unit does not require additional air space for top, sides, or rear. However, the front grille must NOT be obstructed, and clearance is required for an electrical connection in the rear.

⚠ CAUTION

Unit can NOT be installed behind a closed cabinet door.

CUTOUT DIMENSIONS

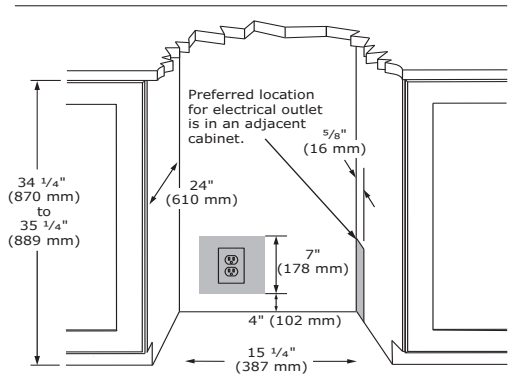

*15″ Cutout width sufficient if door protrudes beyond adjacent cabinetry

PRODUCT DIMENSIONS

REAR

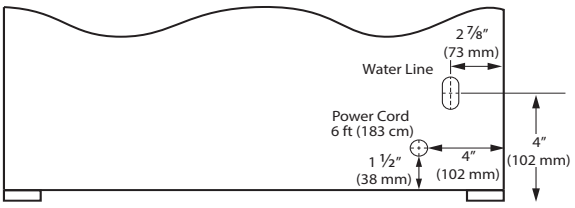

FRONT

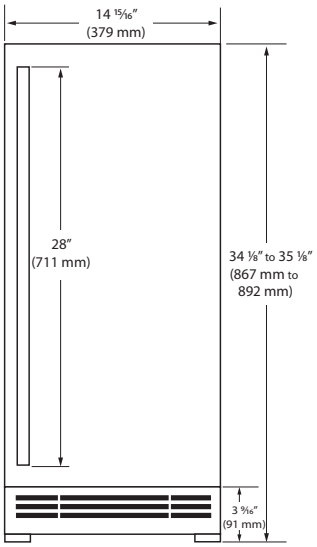

TOP

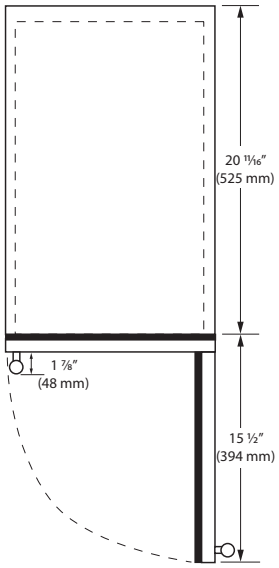

SIDE

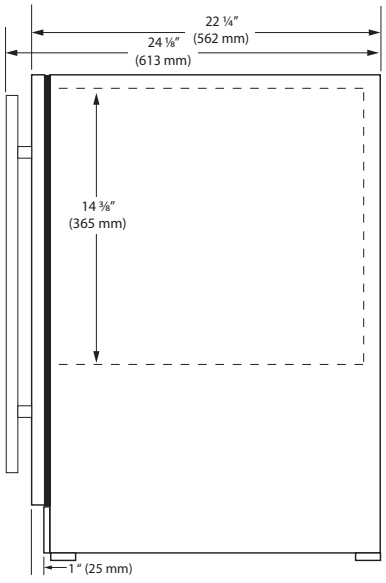

Side-by-Side Installation

Two units may be installed side-by-side.

Cutout width for a side-by-side installation is the cutout dimension of a single unit times two.

No trim kit is required. However, 1/4" (6 mm) of space needs to be maintained between the units to ensure unobstructed door swing.

Units must operate from separate, properly grounded electrical receptacles placed according to each unit's electrical specifications requirements.

Side-by-Side Installation with Bracket

1. Slide both units out so screws on top of units are easily accessible.

2. Remove screws as shown below.

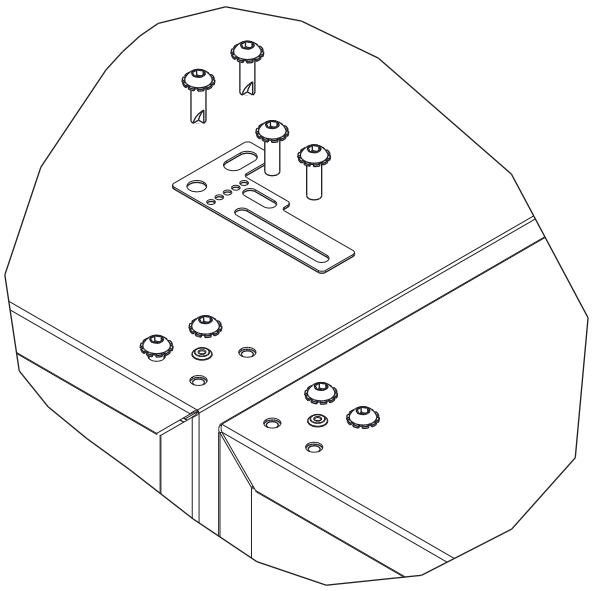

3. Place bracket over holes and attach to unit with two screws removed in step 2 using a T-25 Torx driver. Tighten screws fully.

4. Gently push units into position. Be careful not to entangle the electrical cord or water line, if applicable.

5. Re-check the leveling, from front to back and side to side. Make any necessary adjustments. The unit's top surface should be approximately 1/8" (3 mm) below the countertop.

Water Hookup

PREPARE PLUMBING

The water valve uses a standard 1/4" (6.35 mm) compression fitting. U-Line recommends using accessory water hook up kit – part # ULAWATERHOOKUP. The kit includes a 10' (3 m) braided flexible water supply line and a brass hose fitting.

⚠ CAUTION

Plumbing installation must observe all state and local codes. All water and drain connections MUST BE made by a licensed/qualified plumbing contractor. Failure to follow recommendations and instructions may result in damage and/or harm.

Water Supply Connection

When connecting the water supply, please note the following:

- Before installing the unit and connecting to the cold water supply, review the local plumbing codes.
- The water pressure should be between 20 and 120 psi (138 and 827 kPa).
- The water line MUST have a shut-off valve in the supply line.
- The water line should be looped into 2 coils. This will allow the unit to be removed for cleaning and servicing. Make certain that the tubing is not pinched or damaged during installation.

⚠ WARNING

Connect to potable water supply only.

⚠ CAUTION

Do not use any plastic water supply line. The line is under pressure at all times. Plastic may crack or rupture with age and cause damage to your home.

Do not use tape or joint compound when attaching a braided flexible water supply line that includes a rubber gasket. The gasket provides an adequate seal – other materials could cause blockage of the valve.

Failure to follow recommendations and instructions may result in damage and/or harm, flooding or void the product warranty.

Use new hose set. Do not reuse old hose set.

⚠ CAUTION

Turn off water supply and disconnect electrical supply to unit prior to installation.

Use caution when handling back panel. The edges could be sharp.

1. Turn off water supply and disconnect electrical supply to product prior to attempting installation.
2. Remove the back panel.

3. Locate water valve inlet.

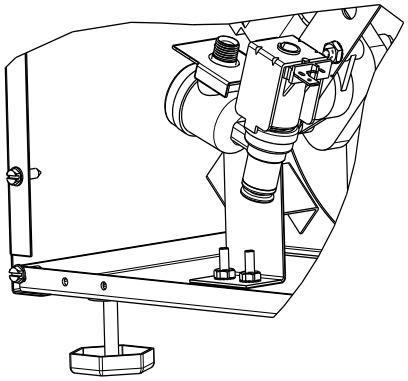

4. Break away filler feature in bushing with flat screwdriver.

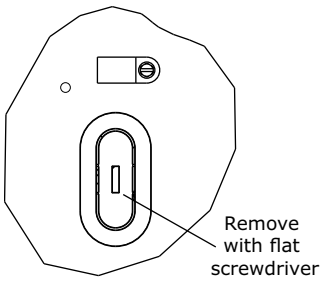

5. Thread water line through back panel hole (with bushing).

6. Locate water valve inlet and connect to valve.

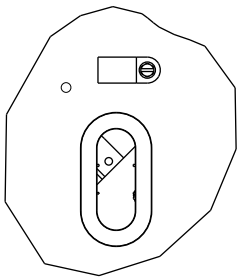

7. Turn on water supply and check for leaks.

8. Reinstall back panel.

9. Install retaining clip.

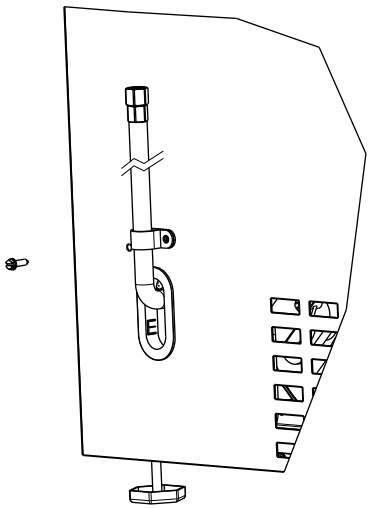

Anti-Tip Bracket

1. Slide unit out so screws on top of unit are easily accessible.

2. Remove the two screws from the opposite side of the hinge assembly using a T-25 Torx driver (see below).

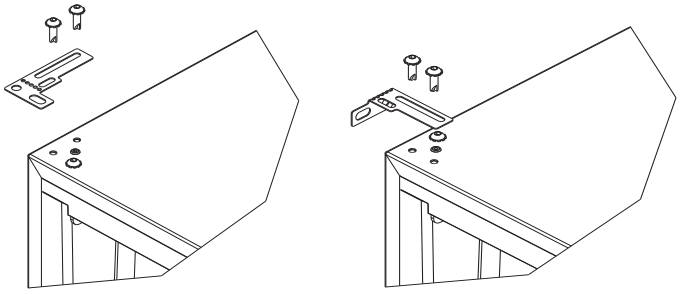

3. Place bracket over holes and attach to unit with two screws removed in step 2 using a T-25 Torx driver. Tighten screws fully.

4. Gently push unit into position. Be careful not to entangle the electrical cord or water line, if applicable.

5. Check to be sure the unit is level from front to back and side to side. Make any necessary adjustments. The unit's top surface should be approximately ⅛" (3 mm) below the countertop.

6. Secure bracket into adjoining surface.

General Installation

LEVELING INFORMATION

1. Use a level to confirm the unit is level. Level should be placed along top edge and side edge as shown.

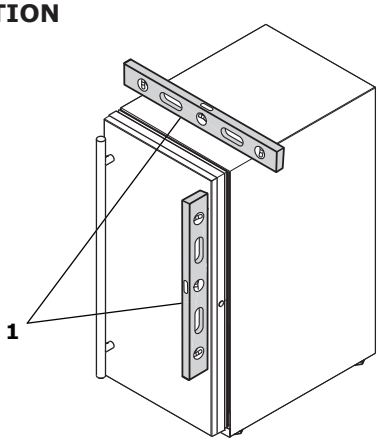

2. If the unit is not level, adjust the legs on the corners of the unit as necessary.

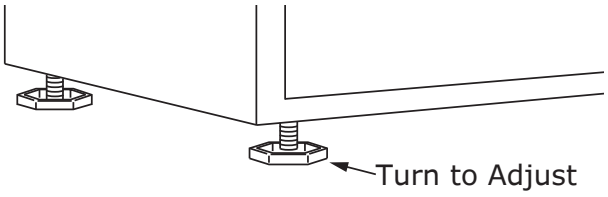

3. Confirm the unit is level after each adjustment and repeat the previous steps as needed.

INSTALLATION TIP

If the room floor is higher than the floor in the cutout opening, adjust the rear legs to achieve a total unit rear height of 1⁄8″ (3 mm) less than opening's rear height. Shorten the unit height in the front by adjusting the front legs. This allows the unit to be gently tipped into the opening. Readjust the front legs to level the unit after it is correctly positioned in the opening.

INSTALLATION

1. Plug in the power/electrical cord.
2. Gently push the unit into position. Be careful not to entangle the cord or water and drain lines, if applicable.
3. Re-check the leveling, from front to back and side to side. Make any necessary adjustments. The unit's top surface should be approximately 1⁄8″ (3 mm) below the countertop.
4. Install the anti-tip bracket.
5. Remove interior packing material and wipe out the inside of the unit with a clean, water-dampened cloth.

Grille Installation

REMOVING AND INSTALLING GRILLE

⚠ WARNING

Disconnect electric power to the unit before removing the grille.

When using the unit, the grille must be installed.

Removing the grille

1. Disconnect power to the unit.
2. Slightly loosen three screws on bottom hinge.

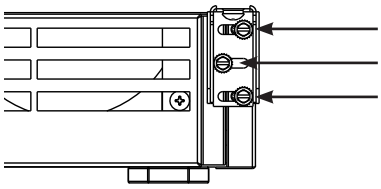

3. Remove two grille screws.
4. Slide grille to the left and remove.

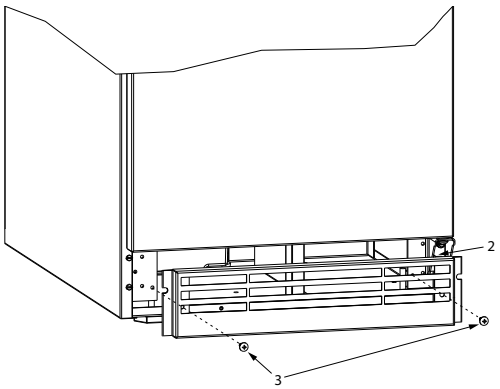

Installing the grille

1. Align cabinet and grille holes and secure, but do not over tighten grille screws (3).
2. Tighten three hinge screws (4).
3. Connect power to unit.

Door Swing

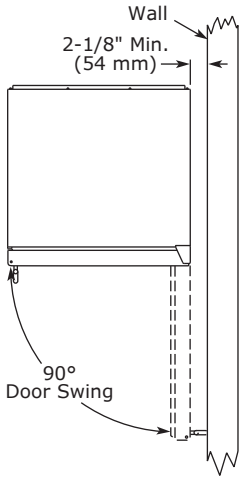

Stainless Steel, Black and White

Stainless steel, black, and white units have a zero clearance for the door to open 90° when installed adjacent to cabinets. Doors with installed integrated panels may require more clearance for the door to open 90° when installed adjacent to cabinets.

Models with factory-installed door handles require 2-1/8" (54 mm) door clearance to accommodate the handle if installed next to a wall. If installing a handle on an integrated panel, be sure to allow for the necessary clearance.

Door Adjustments

HINGE COVER

Hinge cover included with the literature bag is optional.

To install hinge cover:

1. Press hinge cover squarely over hinge.

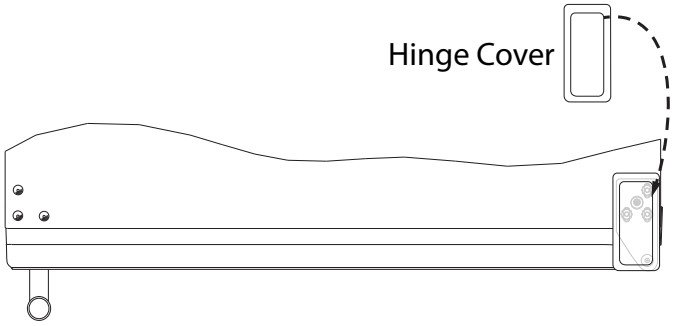

DOOR ALIGNMENT AND ADJUSTMENT

Align and adjust the door if it is not level or is not sealing properly. If the door is not sealed, the unit may not cool properly, or excessive frost may form in the interior.

NOTICE

Properly aligned, the door's gasket should be firmly in contact with the cabinet all the way around the door (no gaps). Carefully examine the door's gasket to ensure that it is firmly in contact with the cabinet. Also make sure the door gasket is not pinched on the hinge side of the door.

To align and adjust the door:

1. Gently pry off hinge cover from top of unit.
2. Loosen (do not remove) top and bottom hinge screws using a Torx T-25 screwdriver on the top and a 1/4" socket on the bottom.
3. Align door squarely with cabinet.
4. Make sure gasket is firmly in contact with cabinet all the way around the door (no gaps).
5. Tighten bottom hinge screws.
6. Tighten top hinge screws and replace hinge cover.

REVERSING THE DOOR

Location of the unit may make it desirable to mount the door on the opposite side of the cabinet.

The hinge hardware will be removed and reinstalled on the opposite side of the cabinet.

TO REVERSE THE DOOR

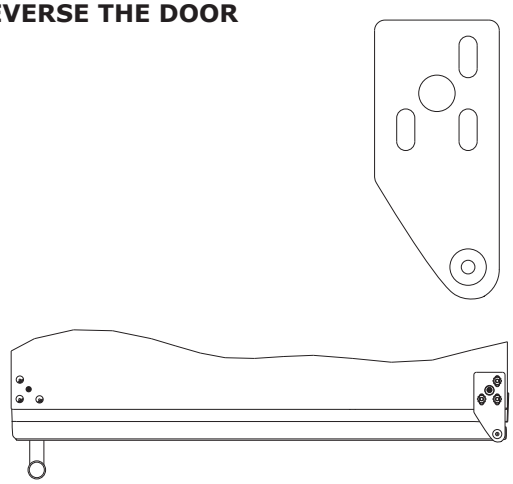

Remove arrow clips:

1. With a putty knife or other flat tool, gently pry each arrow clip from hinge mounting holes.
2. Set aside arrow clips to be reused on the opposite side.

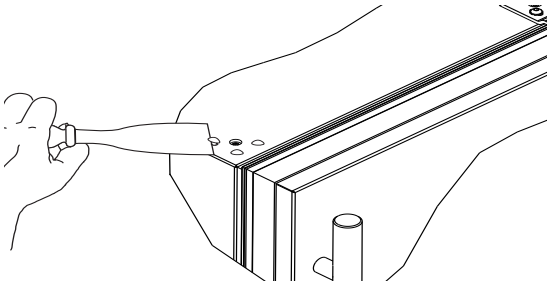

Remove top hinge and door:

1. Remove hinge cover from top of unit
2. Hold door to keep it from falling.
3. Remove top hinge from cabinet using a Torx T-25 screwdriver to remove three screws.

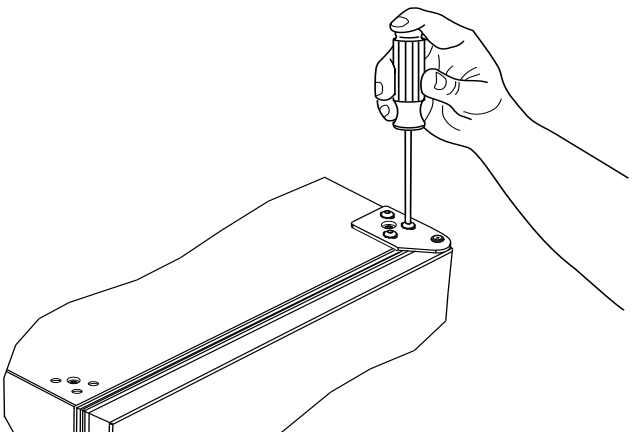

4. Remove door by tilting forward and lifting door off bottom hinge. Retain shoulder washers; they will be reused.
5. Insert arrow clips into holes

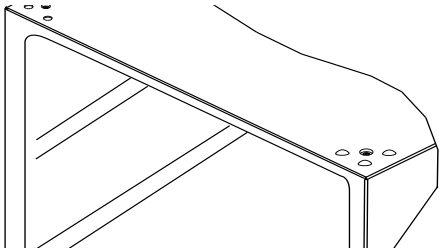

Remove bottom hinge:

1. Remove bottom hinge from cabinet using a 1/4" socket.

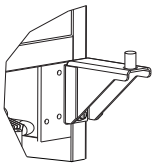

2. Remove corresponding screws on opposite side of cabinet. On some models there may be a nut behind one or both screws on either side.

Install bottom hinge:

Install two or three screws, depending on model. Replace nuts if used.

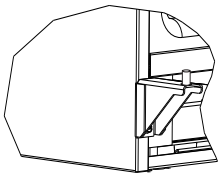

PREPARE DOOR FOR REINSTALLATION

Rotate gasket

1. With a flat tool, such as a putty knife, gently pry up beneath the gasket and spacer until completely free from the door surface.
2. Continue removing the gasket by grabbing hold and gently pulling outward, exposing the gasket channel.
3. Remove the 3 pieces of gasket channel filler and reinstall on the opposite end of door.

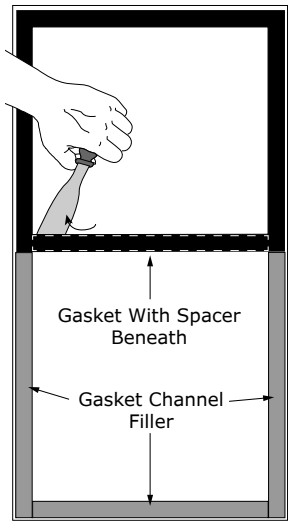

4. Install gasket into channel, beginning at one corner and pressing in firmly.
5. Press down on middle horizontal portion of gasket until it adheres to the door surface.

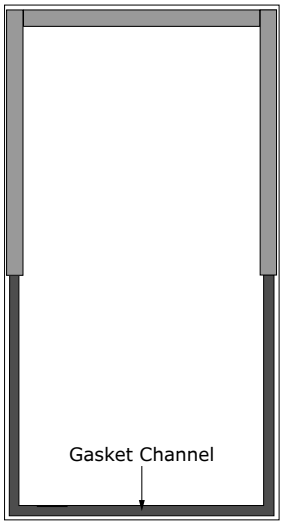

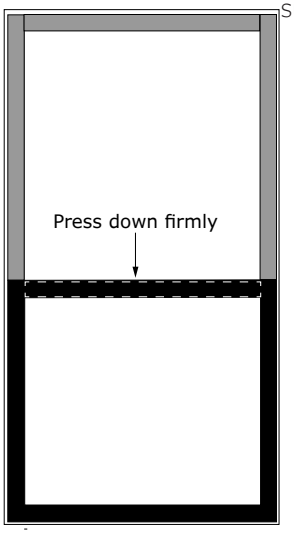

Note: It may be necessary to apply a strip of two-sided tape for a firm adhesion.

Install top hinge and door:

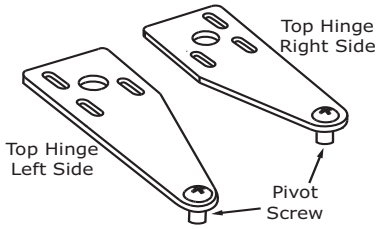

1. Remove pivot screw from hinge, flip hinge over, and install the pivot screw in the same hole from the opposite surface.

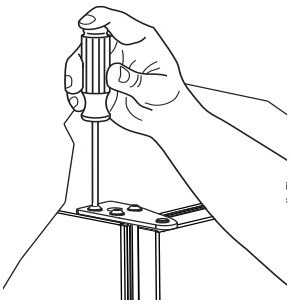

2. Lift the door onto the bottom hinge.
3. Align edge of the hinge with the outer edge of the unit.
4. Tighten three screws and replace hinge cover.
5. Replace hinge cover.

Align and adjust the door:

Align and adjust the door (see DOOR ALIGNMENT AND ADJUSTMENT)

First Use

Initial startup requires no adjustments.

NOTICE

U-Line recommends discarding the ice produced during the first two to three hours of operation to avoid possible dirt or scale that may dislodge from the water line.

To turn the unit on or off:



Press the rocker switch located inside the door on the front panel, or behind the grille.

Ice

ICE MAKER OPERATION

When the ice bucket is full, the ice making mechanism will shut off. However, the refrigeration system will continue to cool and maintain the ice supply.

NOTICE

Do not place cans or bottles in the ice compartment because they will freeze.

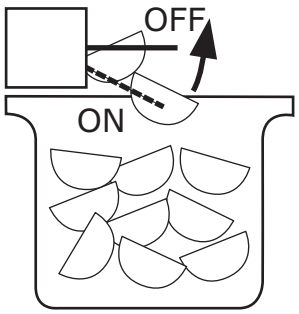

To turn off ice production: Raise the bin arm into an upright and locked position. The unit will preserve temperature for ice storage.

NOTICE

If not intending to use the ice maker, turn the water supply valve off. It is also important to raise the bin arm of the ice maker (see above). Failure to raise the bin arm may result in damage to the water valve.

Certain sounds are normal during the unit's operation. You may hear the compressor or fan motor, the water valve, or ice dropping into the ice bucket.

⚠ CAUTION

NEVER use an ice pick, knife or other sharp instrument to separate cubes. Shake the ice bucket instead.

During periods of limited use or high ambient temperatures, it is common for cubes to fuse together. Gently shake the bucket to break apart cubes. If not using the ice maker regularly, empty the ice bucket periodically to ensure fresh cubes.

It is normal for cubes to appear cloudy. The cause is air trapped in the water because of fast freezing. It is not caused by the health, taste or chemical make up of the water. It is the same air that is in every glass of water you drink.

Remove the ice bucket for emptying and cleaning. To remove the ice bucket, raise the bin arm and remove the bucket from the ice compartment. Use the ice bucket for ice storage only.

ICE MAKER ADJUSTMENT

Ice Cube Thickness Adjustment

Interval - As Required

On ice maker equipped models, adjust the cube size by changing water amount injected into the ice maker assembly as follows:

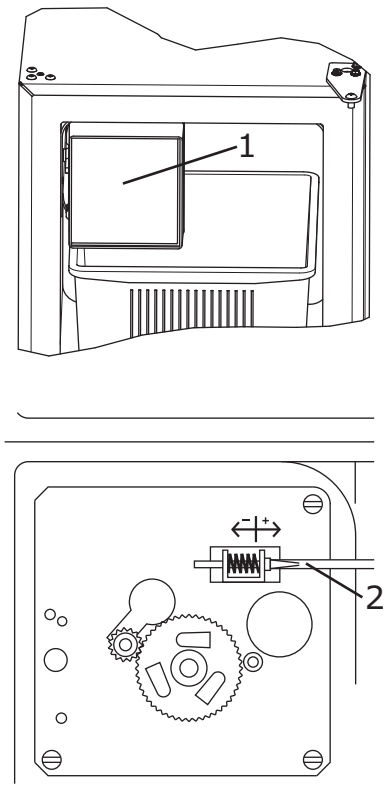

1. Remove the ice maker assembly cover (1).

2. Find the adjusting screw on the ice maker assembly control box (2). The adjusting screw is just below the minus (-) and plus (+) signs on the control box.

⚠ CAUTION

Too large of an adjustment to the screw can cause the water to overflow the ice maker and can cause property damage.

3. Turn the adjusting screw toward the minus (-) sign (clockwise) for smaller cubes or toward the plus (+) sign (counterclockwise) for larger cubes.

4. Install the ice maker assembly cover.

ADJUSTING ICE HARVEST

1. Remove the front grille (see GRILLE INSTALLATION).

2. Using a flat tip screwdriver, turn the adjusting screw (3) a small increment clockwise for a COLDER setting (slower ice production) or counterclockwise for a WARMER setting (faster ice production).

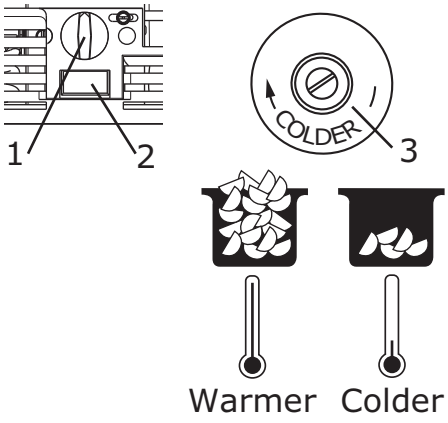

3. Reinstall the front grille (two screws).

Airflow and Product Loading

NOTICE

The unit requires proper airflow to perform at its highest efficiency. Do not block the front grille at any time, or the unit will not perform as expected. Do not install the unit behind a door.

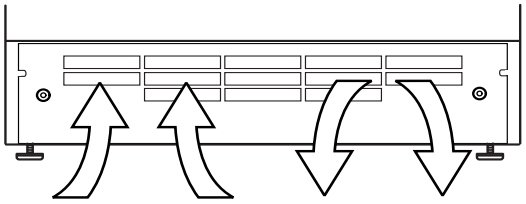

Cleaning

EXTERIOR CLEANING

Vinyl Clad (Black or White) Models

Clean surfaces with a mild detergent and warm water solution. Do not use solvent-based or abrasive cleaners. Use a soft sponge and rinse with clean water. Wipe with a soft, clean towel to prevent water spotting.

Clean any glass surfaces with a non-chlorine glass cleaner.

Stainless Models

Stainless door panels, handles and frames can discolor when exposed to chlorine gas, pool chemicals, saltwater or cleaners with bleach.

Keep your stainless unit looking new by cleaning with a good quality all-in-one stainless steel cleaner and polish monthly. For best results use Claire® Stainless Steel Polish and Cleaner. Comparable products are acceptable. Frequent cleaning will remove surface contamination that could lead to rust. Some installations may require cleaning weekly.

Do not clean with steel wool pads.

Do not use stainless steel cleaners or polishes on any glass surfaces.

Clean any glass surfaces with a non-chlorine glass cleaner.

Do not use cleaners not specifically intended for stainless steel on stainless surfaces (this includes glass, tile and counter cleaners).

If any surface discoloring or rusting appears, clean it quickly with Bon-Ami® or Barkeepers Friend Cleanser® and a nonabrasive cloth. Always clean with the grain. Always finish with Claire® Stainless Steel Polish and Cleaner or comparable product to prevent further problems.

Using abrasive pads such as ScotchBrite™ will cause the graining in the stainless to become blurred.

Rust not cleaned up promptly can penetrate the surface of the stainless steel and complete removal of the rust may not be possible.

Integrated Models

To clean integrated panels, use household cleaner per the cabinet manufacturer's recommendations.

INTERIOR CLEANING

Disconnect power to the unit.

Clean the interior and all removed components using a mild nonabrasive detergent and warm water solution applied with a soft sponge or non-abrasive cloth.

Rinse the interior using a soft sponge and clean water.

Do not use any solvent-based or abrasive cleaners. These types of cleaners may transfer taste to the interior products and damage or discolor the interior.

DEFROSTING

Manual Defrost Models

This unit is a manual defrost model and will require occasional defrosting. When there is build-up of 1/4" (6 mm) or more of frost, manually defrost the unit.

⚠ CAUTION

DO NOT use an ice pick or other sharp instrument to help speed up defrosting. These instruments can puncture the inner lining or damage the cooling unit. DO NOT use any type of heater to defrost. Using a heater to speed up defrosting can cause personal injury and damage to the inner lining.

To defrost:

1. Disconnect power to the unit.
2. Remove ice bucket and discard ice.
3. Place towel or other absorbent material on bottom of ice bin.
4. Fill the ice bucket half full with warm, not hot water. This will help the unit defrost faster.
5. Place the ice bucket back into the unit on top of the towel or other absorbent material.
6. Prop the door in an open position (2 in. [50 mm] minimum).
7. After about 1 hour remove the ice bin and discard water.
8. Allow the frost to melt naturally.
9. After the frost melts completely clean the interior and all removed components. (See INTERIOR CLEANING).

NOTICE

DO NOT clean ice bucket using a dishwasher. The bucket is not dishwasher safe and will be damaged.

10. When the interior is dry, reconnect power and turn unit on.

NOTE: To safeguard against contaminates in ice, discard first three batches of ice after defrosting.

Cleaning Condenser

INTERVAL - EVERY SIX MONTHS

To maintain operational efficiency, keep the front grille free of dust and lint, and clean the condenser when necessary. Depending on environmental conditions, more or less frequent cleaning may be necessary.

⚠ WARNING

Disconnect electric power to the unit before cleaning the condenser.

NOTICE

DO NOT use any type of cleaner on the condenser unit. Condenser may be cleaned using a vacuum, soft brush, or compressed air.

1. Remove the grille. See GRILLE INSTALLATION).
2. Clean the condenser coil using a soft brush or vacuum cleaner.
3. Install the grille.

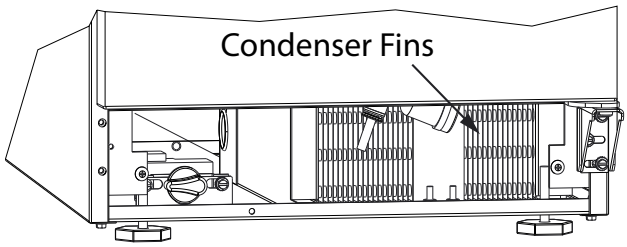

Extended Non-Use

VACATION/HOLIDAY, PROLONGED SHUTDOWN

The following steps are recommended for periods of extended non-use:

1. Remove all consumable content from the unit.

2. Disconnect the power cord from its outlet/socket and leave it disconnected until the unit is returned to service.

3. If ice is on the evaporator, allow ice to thaw naturally.

4. Clean and dry the interior of the unit. Ensure all water has been removed from the unit.

5. The door must remain open to prevent formation of mold and mildew. Open door a minimum of 2" (50 mm) to provide the necessary ventilation.

WINTERIZATION

If the unit will be exposed to temperatures of 40°F (5°C) or less, the steps above must be followed.

For questions regarding winterization, please call U-Line at 414.354.0300.

⚠ CAUTION

Damage caused by freezing temperatures is not covered by the warranty.

Troubleshooting

BEFORE CALLING FOR SERVICE

If you think your U-Line product is malfunctioning, read the CONTROL OPERATION section to clearly understand the function of the control.

If the problem persists, read the NORMAL OPERATING SOUNDS and TROUBLESHOOTING GUIDE sections below to help you quickly identify common problems and possible causes and remedies. Most often, this will resolve the problem without the need to call for service.

IF SERVICE IS REQUIRED

If you do not understand a troubleshooting remedy, or your product needs service, contact U-Line Corporation directly at +1.414.354.0300

When you call, you will need your product Model and Serial Numbers. This information appears on the Model and Serial number plate located on the upper right or rear wall of the interior of your product.

NORMAL OPERATING SOUNDS

All models incorporate rigid foam insulated cabinets to provide high thermal efficiency and maximum sound reduction for its internal working components. Despite this technology, your model may make sounds that are unfamiliar.

Normal operating sounds may be more noticeable because of the unit's environment. Hard surfaces such as cabinets, wood, vinyl or tiled floors and paneled walls have a tendency to reflect normal appliance operating noises.

Listed below are common refrigeration components with a brief description of the normal operating sounds they make. NOTE: Your product may not contain all the components listed.

- Compressor: The compressor makes a hum or pulsing sound that may be heard when it operates.
- Evaporator: Refrigerant flowing through an evaporator may sound like boiling liquid.
- Condenser Fan: Air moving through a condenser may be heard.
- Automatic Defrost Drain Pan: Water may be heard dripping or running into the drain pan when the unit is in the defrost cycle.

TROUBLESHOOTING GUIDE

⚠ DANGER

ELECTROCUTION HAZARD. Never attempt to repair or perform maintenance on the unit before disconnecting the main electrical power.

Troubleshooting - What to check when problems occur:

Problem	Possible Cause and Remedy
Light Remains on When Door Is Closed.	Turn off light switch if equipped. Check reed switch.
Unit Develops Frost on Internal Surfaces.	Frost on the rear wall is normal and will melt during each off cycle. If there is excessive build-up of 1/4" or more, manually defrost the unit. Ensure the door is closing and sealing properly. High ambient temperature and excessive humidity can also produce frost.
Unit Develops Condensation on External Surfaces.	The unit is exposed to excessive humidity. Moisture will dissipate as humidity levels decrease.
Product Is Freezing.	Because product in contact with the rear wall may freeze, ensure no product is touching the rear wall. Adjust the temperature to a warmer set point.

Problem	Possible Cause and Remedy
Product is Not Cold Enough.	Air temperature does not indicate product temperature. See CHECKING PRODUCT TEMPERATURE below. Adjust the temperature to a cooler set point. Ensure unit is not located in excessive ambient temperatures or in direct sunlight. Ensure the door is closing and sealing properly. Ensure the interior light has not remained on too long. Ensure nothing is blocking the front grille, found at the bottom of the unit. Ensure the condenser coil is clean and free of any dirt or lint build-up.

CHECKING PRODUCT TEMPERATURE

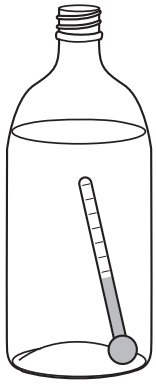

To check the actual product temperature in the unit:

1. Partially fill a plastic (nonbreakable) bottle with water.
2. Insert an accurate thermometer.
3. Tighten the bottle cap securely.
4. Place the bottle in the desired area for 24 hours.
5. Avoid opening the unit during the testing period.
6. After 24 hours, check the temperature of the water. If required, adjust the temperature control in a small increment (see CONTROL OPERATION).

Causes which affect the internal temperatures of the cabinet include:

- Temperature setting.
- Ambient temperature where installed.
- Installation in direct sunlight or near a heat source.
- The number of door/drawer openings and the time the door/drawer is open.
- The time the internal light is illuminated. (This mainly affects product on the top rack or shelf.)
- Obstruction of front grille or condenser.

Wire Diagram

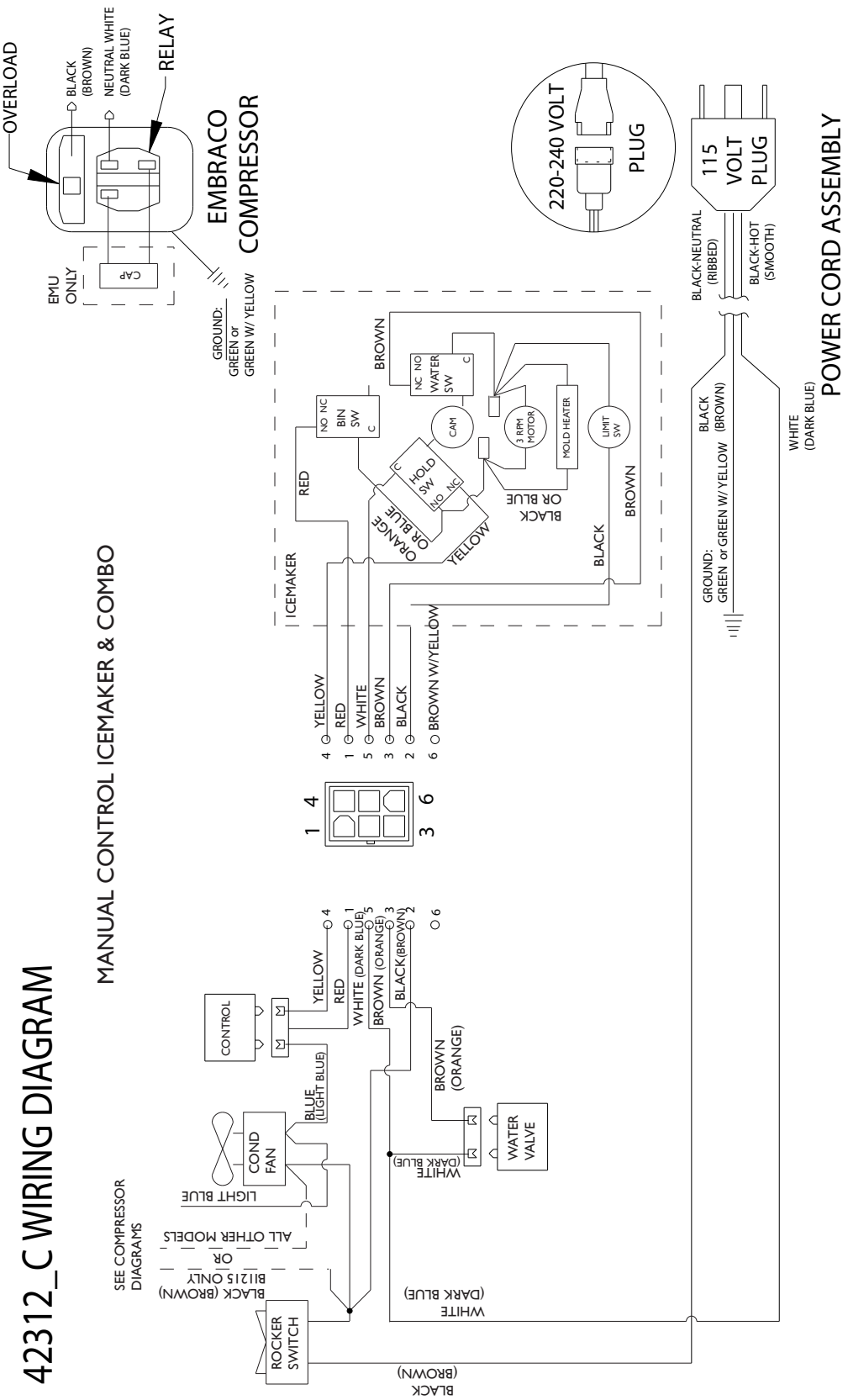

Product Liability

Field service technicians are authorized to make an initial assessment in the event of reported damages. If there are any questions about the process involved, the technician should call U-Line for further explanation.

While inspecting for defects or installation issues, photos should be taken to document any damages or issues found.

During the assessment, if the service technician is able to find the source of the damage and it can be resolved by replacement of a part, the servicer is authorized to replace the part in question. The part that caused the damage must be returned to U-Line in its entirety. The part must be clearly labeled with the serial number of the unit it was removed from, the date, and the servicer who removed the part.

If the service technician determines the damage is the result of installation issues (water connection/drain, etc.), the consumer would be notified and the issues shall be resolved at the direction of the consumer.

If damage is evident and the service technician is unable to find the source, U-Line must be contacted at 1.800.799.2547 for further direction.

8900 N. 55th Street • Milwaukee, WI 53223
T: +1.414.354.0300 • F: +1.414.354.5696
Website: www.u-line.com

Right product. Right place.
Right temperature Since 1962.

Warranty Claims

The following information defines the parameters for filing a warranty claim:

- Valid serial number needed
- Valid model number needed
- Claims must be submitted online at www.U-LineService.com
- 60 day submittal deadline from date of completed service
- Only one repair or unit per warranty claim
- Part order numbers will be required when submitting for warranty labor

Units must be registered prior to warranty submittal. Customers may register at www.U-Line.com. A proof of purchase is required. We also accept the following information to update warranty:

- New construction occupancy documents
- Closing paperwork
- Final billing - Remodel

Warranty parts will be shipped at no charge after U-Line confirms warranty status. Please provide the model, serial number, part number and part description. Some parts will require color or voltage information.

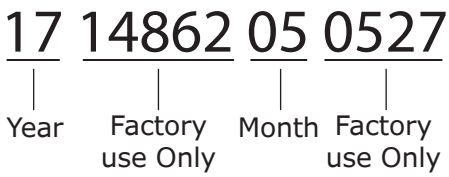

Parts

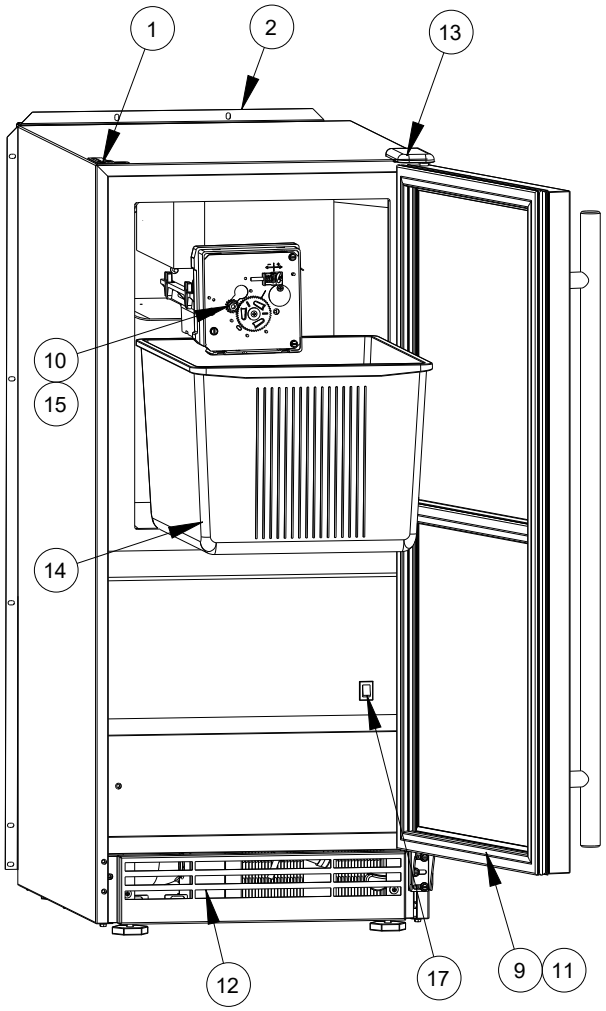

	UHCR115-WS01B	
Item	Description	U-Line P/N
1	ANTI TIP BRACKET W/SCREWS	80-54239-00
2	BACK PANEL ASSEMBLY	80-55377-02
3	COMPRESSOR EM2C46CLC, 115V, R600	80-55658-11
4	CONDENSER ASSY BI1215	80-55123-00
5	CONDENSER FAN BLADE	80-54379-00
6	CONDENSER FAN W/BLADE	80-54378-00
7	CONTROL W/KNOB	80-54568-01
8	CONTROL KNOB	80-54382-00
9	DOOR ASSEMBLY W/HINGES, WHITE	80-54352-02
10	FACEPLATE 115V, R600	80-54523-01
11	GASKET, DOOR	80-54375-00
12	GRILLE ASSEMBLY, 15" BLACK	80-55609-03
13	HINGE ASSEMBLY	80-55595-00
14	ICE BUCKET	80-54386-00
15	ICEMAKER, 115V, R600, MANUAL	80-55669-00
16	LEG LEVELERS (4)	80-54019-00
17	ROCKER SWITCH	80-54105-00
18	PACKAGING *	80-54387-00
19	POWER CORD, EXTERNAL *	80-55519-00
20	WATERLINE ASSEMBLY	80-54722-00
21	WATER VALVE ASSEMBLY	80-54356-01
22	WIRE HARNESS, MAIN *	80-55638-12

* NOT PICTURED

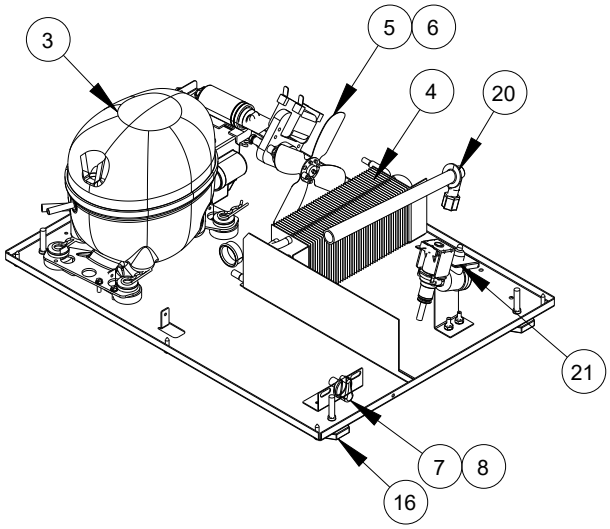

Ordering Replacement Parts

Parts may be ordered online at www.U-Line.com

See our contact information below:

www.U-LineService.com (with service login)
Phone Number: +1.414.354.0300

NOTICE
Use only genuine U-Line replacement parts. The use of non-U-Line parts can reduce speed of ice production, cause water to overflow from ice maker mold, damage the unit, and void the warranty.

Warranty parts will be shipped at no charge after U-Line confirms warranty status. Please provide the model, serial number, part number and part description. Some parts will require color or voltage information.

If U-Line requires the return of original parts, we will inform you when the parts order is taken. This requirement will be noted on your packing list. A prepaid shipping label will be emailed to you. Please enclose a copy of the parts packing list and be sure the model and serial numbers are legible on the paperwork. Tag the part with the reported defect.

Customers and non-authorized servicers may order non-warranty parts at www.u-line.com. Authorized servicers with a servicer login may order non-warranty parts at www.u-lineservice.com.

System Diagnosis Guide

REGRIGERATION SYSTEM DIAGNOSIS GUIDE

System Condition	Suction Pressure	Suction Line	Compressor Discharge	Condenser	Capillary Tube	Evaporator	Wattage
Normal	Normal	Slightly below room temperature	Very hot	Very hot	Warm	Cold	Normal
Overcharge	Higher than normal	Very cold may frost heavily	Slightly warm to hot	Hot to warm	Cool	Cold	Higher than normal
Undercharge	Lower than normal	Warm- near room temperature	Hot	Warm	Warm	Extremely cold near inlet - Outlet below room temperature	Lower than normal
Partial Restriction	Somewhat lower than normal vacuum	Warm- near room temperature	Very hot	Top passes warm - Lower passes cool (near room temperature) due to liquid	Room temperature (cool) or colder	Extremely cold near inlet - Outlet below room temperature backing up	Lower than normal
Complete Restriction	In deep vacuum	Room temperature (cool)	Room temperature (cool)	Room temperature (cool)	Room temperature (cool)	No refrigeration	Lower than normal
No Gas	0 PSIG to 25"	Room temperature (cool)	Cool to hot	Room temperature (cool)	Room temperature (cool)	No refrigeration	Lower than normal

Compressor Specifications

⚠ DANGER

Electrocution can cause death or serious injury. Burns from hot or cold surfaces can cause serious injury. Take precautions when servicing this unit.

Disconnect the power source.

Do not stand in standing water when working around electrical appliances.

Make sure the surfaces you touch are not hot or frozen.

Do not touch a bare circuit board unless you are wearing an anti-static wrist strap that is grounded to an electrical ground or grounded water pipe.

Handle circuit boards carefully and avoid touching components.

To measure the start winding resistance, measure across the C and S pins.

To measure the run winding resistance, measure across the C and R pins.

Also check S to R and you should get the sum of the run and start windings.

To ensure the windings are not shorted, check the S and R to ground.

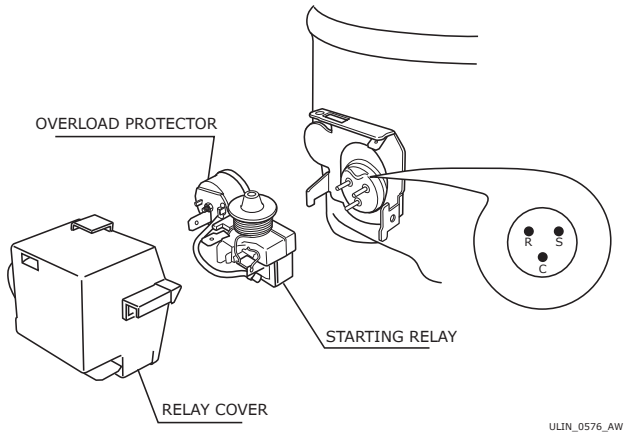

	EM150HER
Refrigerant	R134a
Voltage	115 VAC
Frequency	60 Hz
Run Cap	n/a
Start Winding	12.1 Ohm at 77°F
Run Winding	3.9 Ohm at 77°F
LRA	18.0 A
FLA	2.0 A
Starting Device	213514105
Overload	4TM757KFBYY-53

* All resistance readings are ±10%

Troubleshooting - Extended

SPECIFIC ERRORS & ISSUES

⚠ CAUTION

Never attempt to repair or perform maintenance on the unit until the main electrical power has been disconnected from the unit.

TROUBLESHOOTING GUIDE

Concern	Potential Causes	Suggested Remedy
Will not eject ice (water frozen).	Control setting too cold.	Adjust control warmer (counterclockwise).
	Control inoperable (1-2 contacts open)	Replace control.
	Bin switch inoperable.	Replace bin switch.
	Limit switch defective (open).	Replace limit switch.
	Ice maker assembly motor stalled.	Replace motor.
	Broken wire in ice maker circuit.	Repair or replace wiring.
	Water soaked cabinet insulation.	Replace foamed cabinet assembly.
	Dirty condenser.	Clean condenser.
Will not fill with water.	Water supply valve closed.	Open water supply valve.
	Water switch inoperable (open).	Replace water switch.
	Solenoid valve inoperable.	Replace solenoid valve.
	Fill tube outlet frozen.	Defrost fill tube.
	Broken wire in water fill circuit.	Repair or replace wiring.
Will not stop making ice.	Bin switch inoperable (closed).	Replace bin switch.
	Bin arm binding.	Lubricate bin arm pivot points or loosen bin arm lever screw.
Water will not stop filling.	Water switch inoperable (closed).	Replace water switch.
	Solenoid valve inoperable.	Replace solenoid valve.
	Stalled ice maker motor.	Replace motor.
	Temperature control inoperable. Ice maker is in continuous harvest cycle (contacts 1-2 closed).	Replace temperature control.
Ejector blades will not stop turning.	Control inoperable (1-2 contacts will not open).	Replace control.
	Hold switch inoperable.	Replace hold switch.
	Broken wiring.	Repair or replace wiring.
	Short in mold heater.	Replace heater.
Low ice production.	Control set too cold.	Adjust control warmer (counterclockwise).
	Fan motor stalled.	Replace fan motor.
	Ice cubes too large.	Lower water fill adjustment.
	Dirty condenser.	Clean condenser.
	Bypass valve stuck open (Frost Free units only).	Replace bypass valve (Frost Free units only).
Not freezing (compressor and fan motors operating).	Little or no frost pattern on evaporator.	Check for sealed system leak or restriction.
	Bypass valve stuck open (Frost Free units only).	Replace bypass valve (Frost Free units only).
Not freezing (compressor not operating - fans operating).	Relay inoperable.	Replace relay.
	Overload inoperable (open).	Replace overload.
	Compressor inoperable.	Replace compressor.

Concern	Potential Causes	Suggested Remedy
Not freezing (compressor and fans not operating).	Power cord not plugged in.	Plug in power cord.
	On/Off switch in off position.	Turn switch to on position.
	On/Off switch inoperable (open).	Replace On/Off switch.
	Hold switch inoperable (open).	Replace hold switch.
	Control inoperable (2-3 contacts open).	Replace control.
	Broken wire in freeze circuit.	Repair or replace wiring.
	Ejector blades not in freeze position (12:00)	Manually advance ejector blades to the 12:00 position (test ice maker and limit switch).
Compressor overheating.	Condenser air flow restricted.	Remove restriction (clean condenser and grille).
	Condenser fan blade obstructed.	Remove blade restriction.
	Condenser fan motor stalled.	Replace fan motor.
	Compressor inoperable.	Replace compressor.
Compressor will not stop operating.	Control set too cold.	Adjust control warmer (counterclockwise).
	Control inoperable (2-3 contacts will not open).	Replace control.
	Control sensing bulb not sensing mold temperature.	Fully insert bulb into ice maker tube. Rout bulb away from compressor discharge tube.
	Evaporator fan stalled (Frost Free units only).	Remove obstruction or replace motor.
Water leak (under unit).	Water supply line leaking at solenoid valve inlet.	Tighten fitting or replace fitting gasket and/or fitting.
	Water line leaking at solenoid valve outlet.	Replace water line and fitting.
	Water line leaking at fill tube.	Tighten clamp or replace fill tube assembly.
	Defrost drain line not in drain pan.	Position drain line in drain pan.
	Crack in water line.	Replace water line.
Water leak (inside unit).	Ice maker assembly fill cup obstructed.	Remove obstruction.
	Fill ice cup and fill tube out of alignment.	Align fill tube and fill cup.
	Water level too high.	Adjust water level.
	Defrost drain plugged (Frost Free units only).	Ice in drain trough (Frost Free units only) (see below).
Excessive frost buildup.	Door gasket not sealing properly.	Adjust door hinges or replace door gasket.
	Door out of alignment.	Adjust door hinges.
	Water soaked cabinet insulation.	Replace foamed cabinet assembly.
	Light stays on when door is closed.	Repair or adjust light bracket.
Noisy.	Copper refrigeration tube touching cabinet.	Carefully adjust tubing.
	Fan blade touching shroud.	Adjust fan mounting or shroud.
	Fan blade obstruction (wiring, foam insulation, packaging material).	Remove obstruction.
Ice buildup in drain trough or drainage problem.	Obstructed drain cup or tube.	Clear obstruction.
	Drain trough heater failed (Frost Free units only).	Replace drain trough heater (Frost Free units only).
	Kinked drain tube.	Align drain trough and drain cup.
	Drain trough spout and drain cup not aligned.	Reroute drain tube.
Unit will not defrost (Frost Free units only).	Bypass coil inoperable.	Replace bypass valve.
	Defrost timer inoperable.	Replace defrost timer.
	Bypass valve inoperable.	Replace bypass valve.
Fresh food temperature too cold.	Temperature control set too cold.	Adjust control to warmer setting (counterclockwise).
	Bin/Freezer door not closing.	Adjust or replace door.
	Ice bucket not fully inserted.	Check for ice behind bucket and push ice bucket in place.

ICE MAKER DIAGNOSIS FLOW CHART

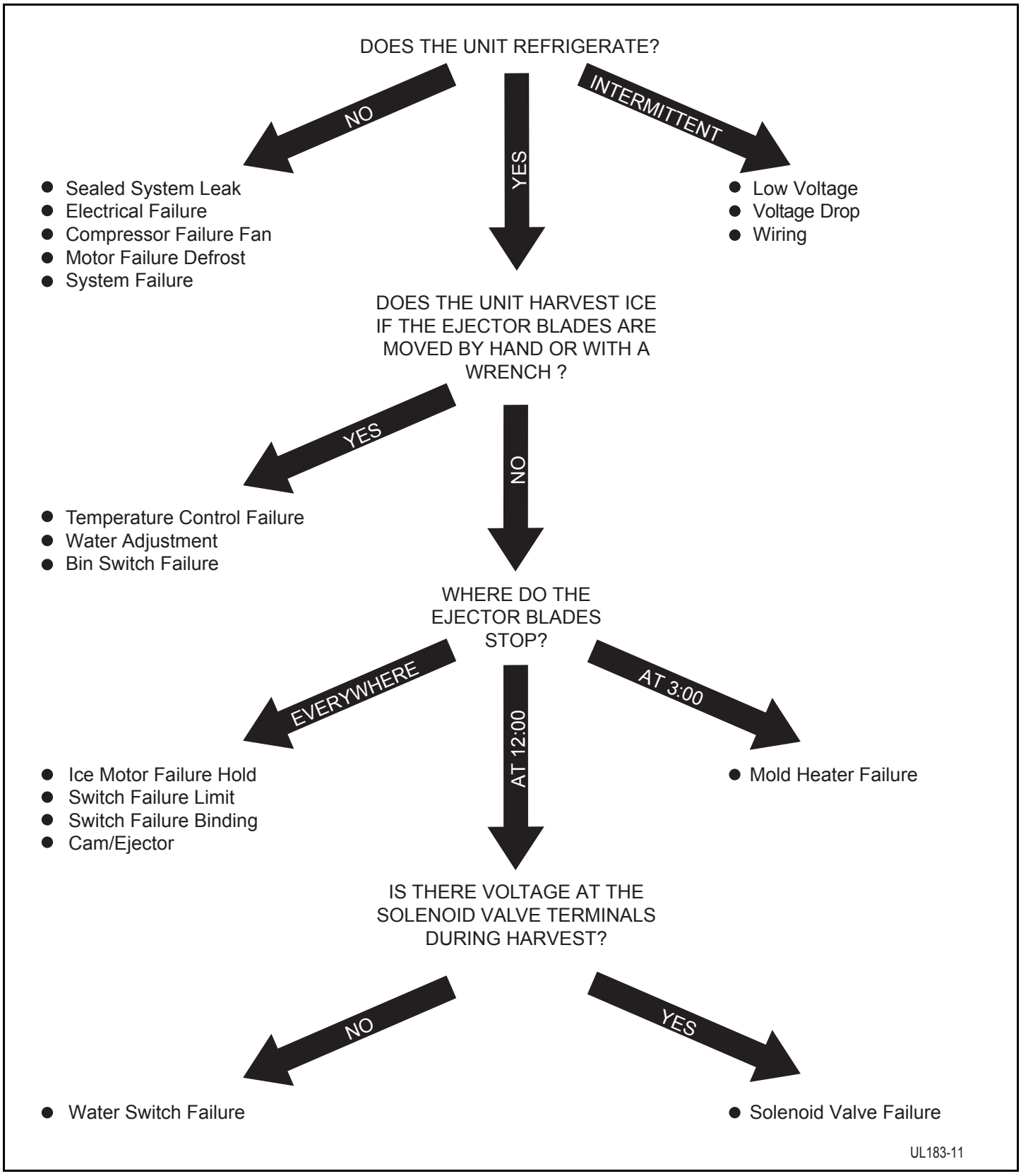

ICE MAKER OPERATING CYCLES

Freeze Cycle

- Temperature control terminals 2 and 3 are closed.
- Power to the condenser.
- Power to the condenser fan.

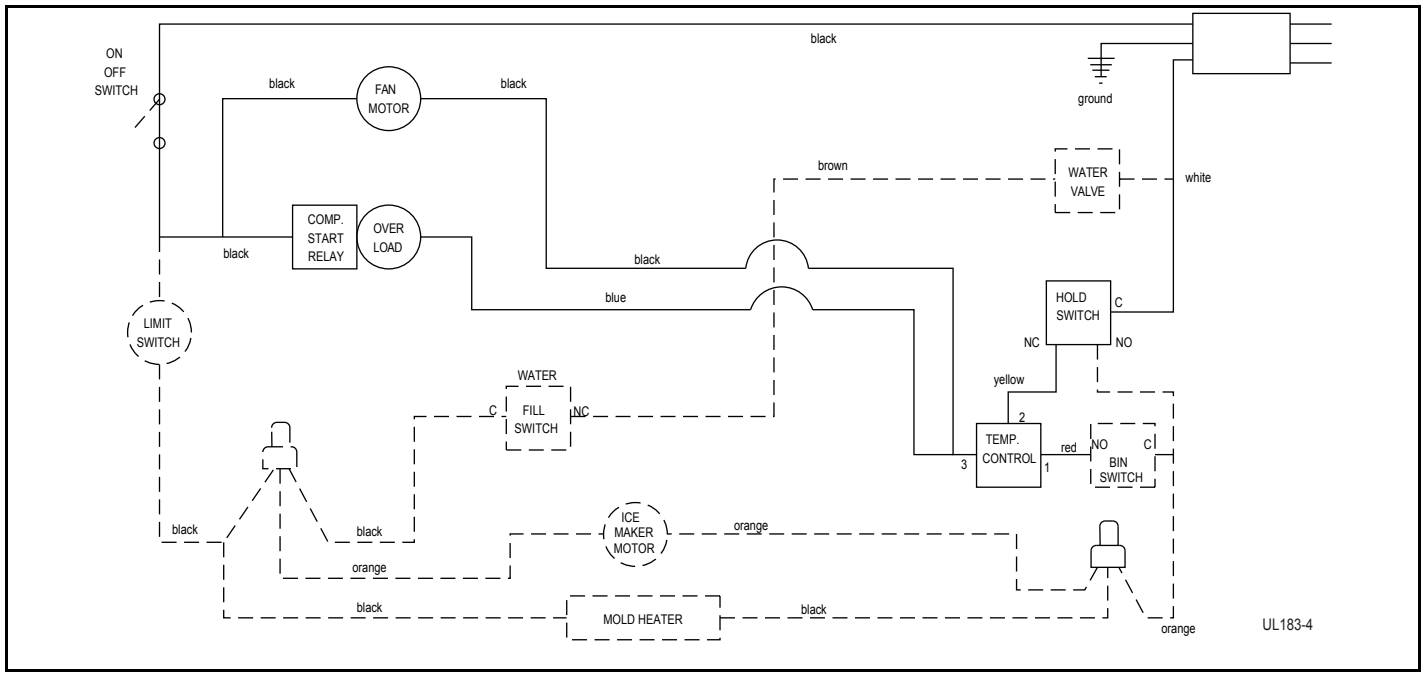

Figure 1. Freeze Cycle

Harvest-1 Cycle

- Temperature control terminals 2 and 3 are open - 2 and 1 close.

- No power to the compressor or condenser fan.

- If bin arm is down, power goes through bin arm switch to the ice maker motor. If bin arm is up, the ice maker will not harvest.

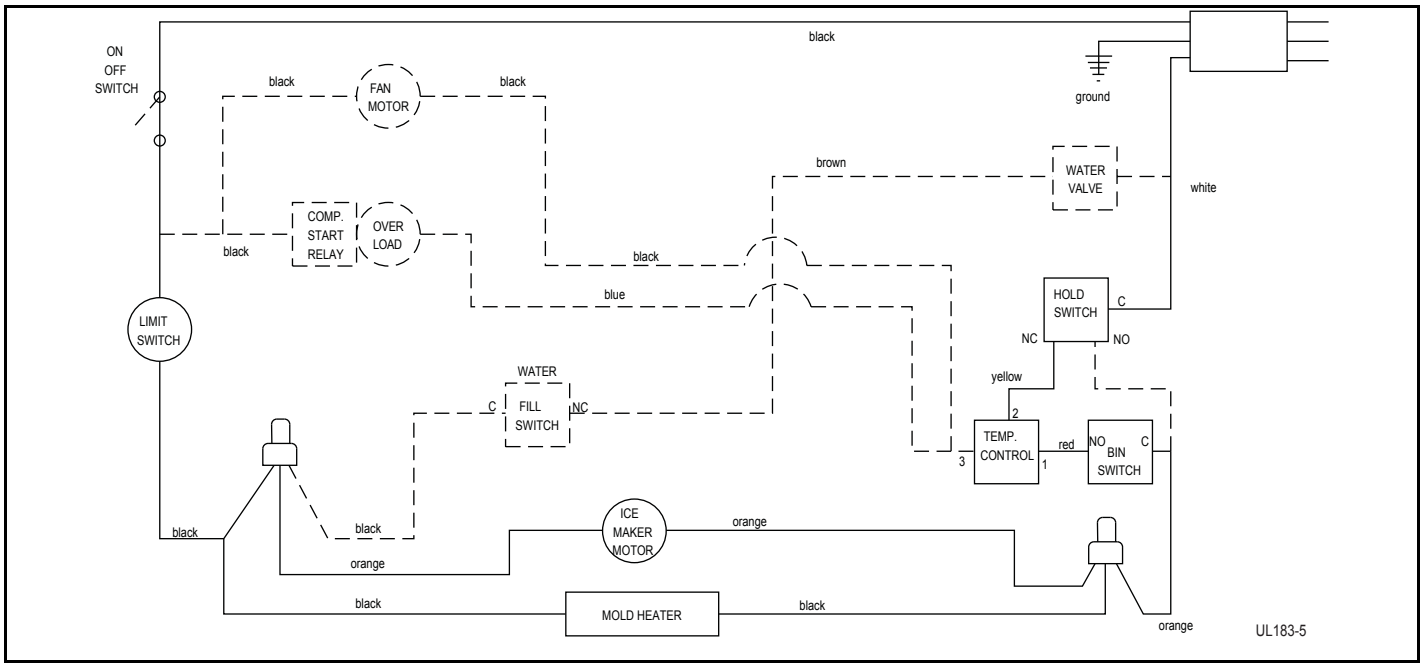

Figure 2. Harvest-1 Cycle (Hold Switch in Normal Position)

HARVEST-2 CYCLE

- Ice maker ejector blades reach approximately 2:00 position and cam depresses the hold switch. Power goes through the hold switch to the ice maker motor and mold heater.

- Ejector blades stall on ice and ice maker motor pulsates until mold heater warms and ice releases.

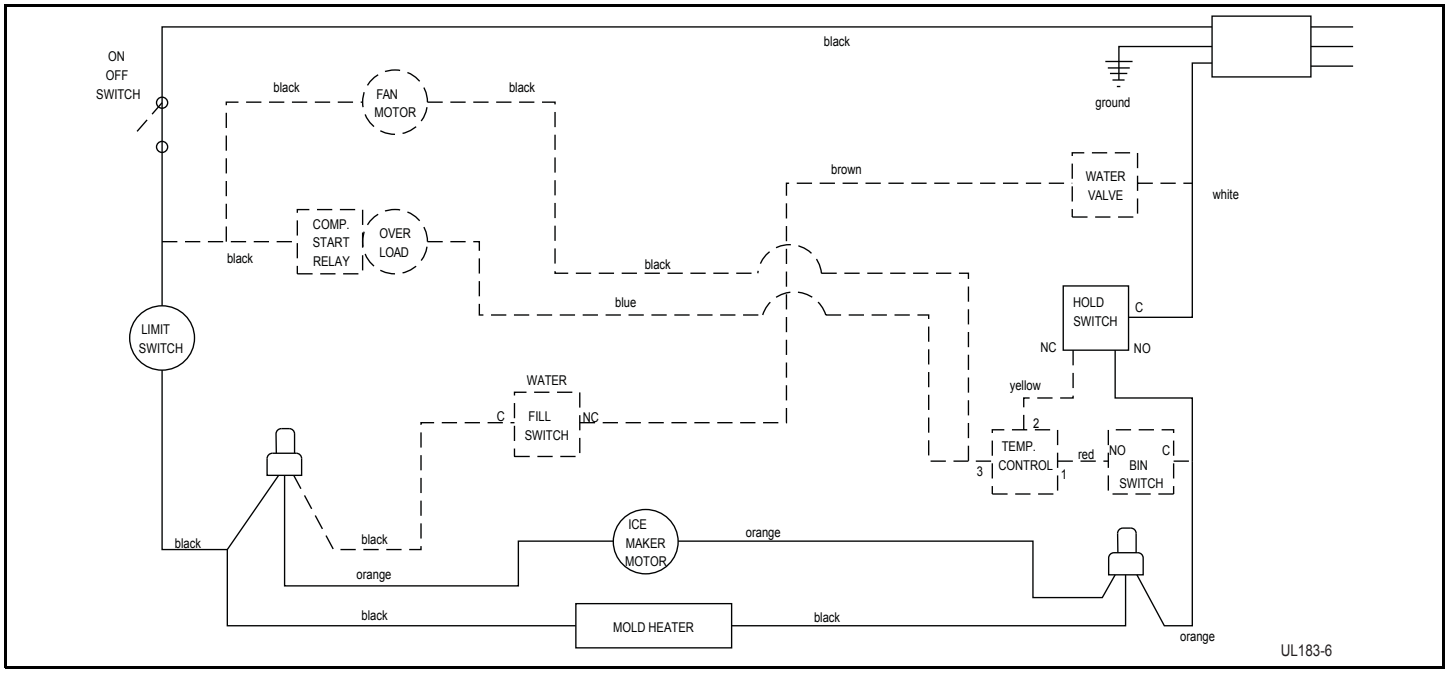

Figure 3. Harvest-2 Cycle (Hold Switch in Switched Position)

WATER FILL CYCLE

- Ice maker ejector blades reach approximately 10:00 position and cam depresses the water fill switch.

- Power to the water valve. Ice maker mold fills.

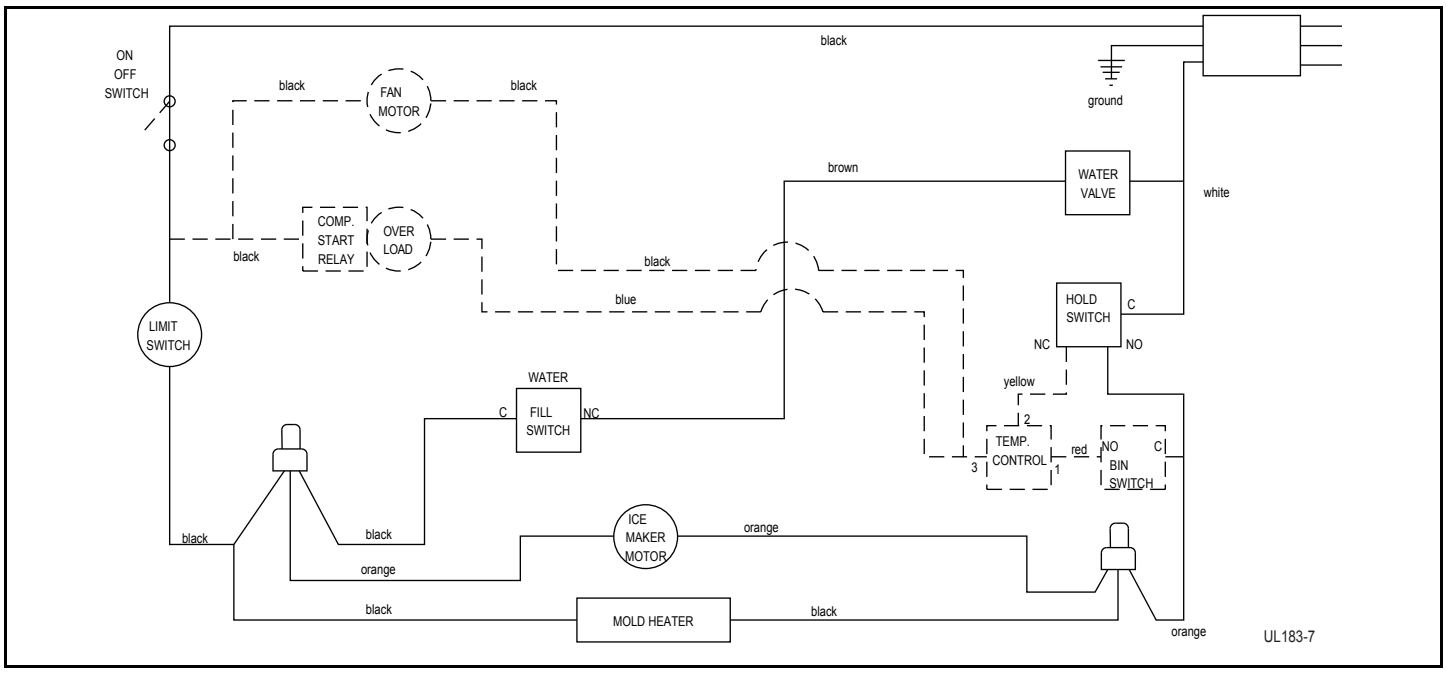

Figure 4. Water Fill Cycle

EJECT CYCLE

- Ejector blades push ice into bucket and stop at 12:00 position.

- Temperature control terminals 2 and 3 have closed during harvest cycle.

- Next freeze cycle begins with power to the compressor and condenser fan.

TEMPERATURE CONTROL SPECIFICATIONS

Double Throw Ice Maker Thermostat Numbers 4548, AR-19-12, 2636, 2690, 2691, 2717, 2783, 2782-S, 2763-S, 2780, 80-26005-02

These temperature controls are double throw, single pole controls. The sensing tube is inserted into the ice maker mold and senses mold temperature. After ice is sensed in the mold, the 2-3 contacts open (stopping the compressor) and the 2-1 contacts are closed (starting the ice maker motor). The 2-3 contacts close (2-1 contacts open) before the end of the ice harvest cycle.The hold switch prevents power going back to the compressor. This prepares the control for the next cycle.

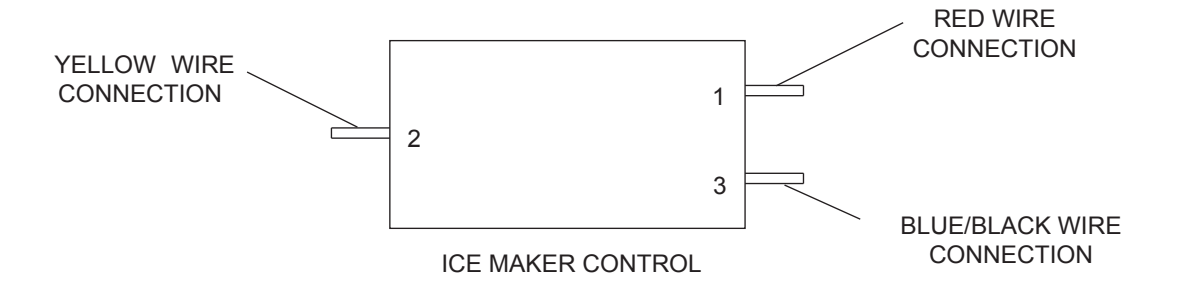

183-8

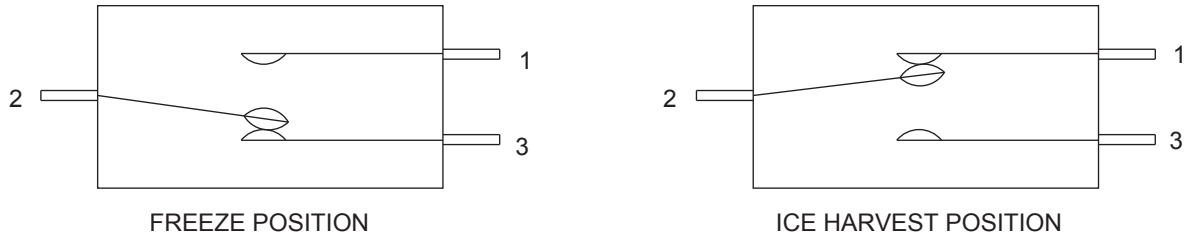

CYCLE	OPEN CIRCUIT	CLOSED CIRCUIT
FREEZE	2 - 1	2 - 3
HARVEST	2 - 3	2 - 1

183-9

Figure 5. Temperature Controls - Manual Defrost Ice Makers

LIMIT SWITCH SPECIFICATIONS

- Normally closed Bi-metal switch
- Open temperature: 104°F
- Close temperature: 83°F

The function of this switch is to open in the event of an overheating condition. This bi-metal thermostat is normally closed and does not initiate the ice harvest cycle. The ice harvest cycle is initiated by a double throw, single pole temperature located remotely from the ice maker assembly.

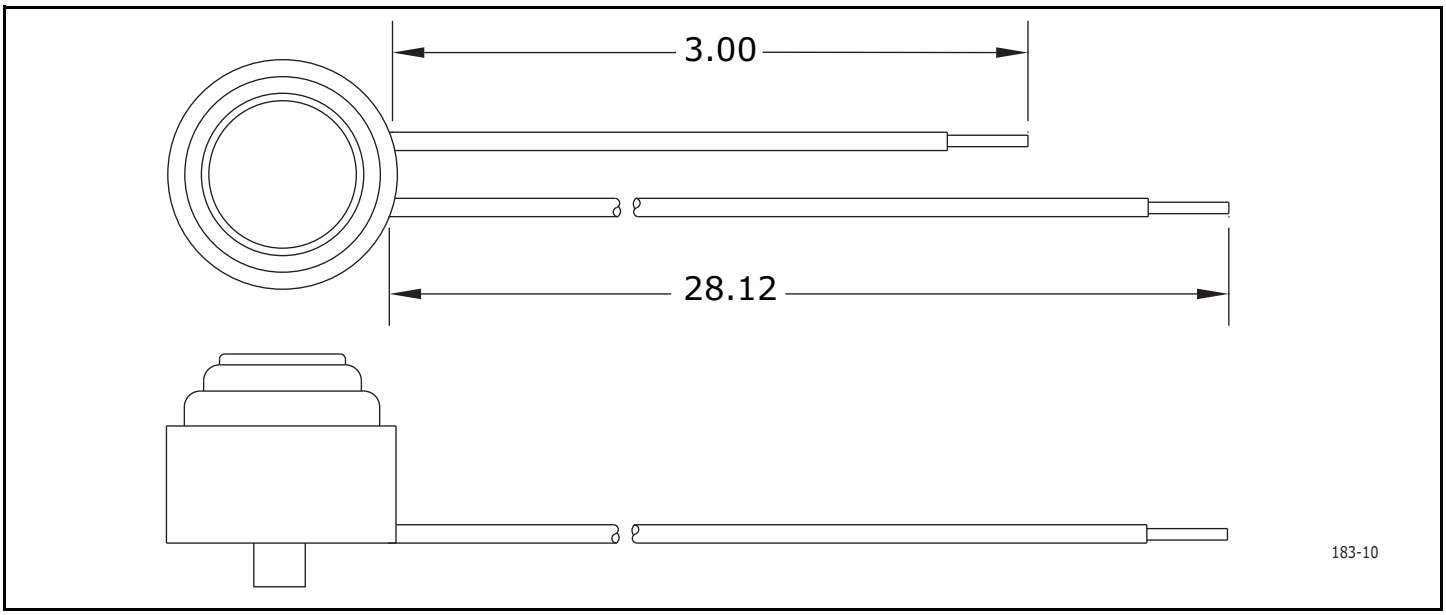

Figure 6. Limit Switch

REPLACING ICE MAKER ASSEMBLY (CO29F ONLY)

1. Unplug the unit from the main power source.
2. Disconnect ice maker wire harness at plug (1).
3. Remove control capillary tube from sensing tube on ice maker assembly (2).
4. Remove water inlet tube.
5. Remove front cover (3).
6. Advance the ejector blade to the 3 o'clock position by turning the 5/16" hex head on the small brass gear counterclockwise (4).
7. Remove three screws from wall of freezer housing (5).
8. Remove ice maker assembly.
9. Place new ice maker assembly into position and secure with three screws (5).
10. Reconnect wire harness at plug.
11. Insert control capillary tube into ice maker sensing tube.
12. Insert water inlet tube.
13. Apply Permagum® to all exit holes.
14. Install back panel.
15. Plug in unit and test.

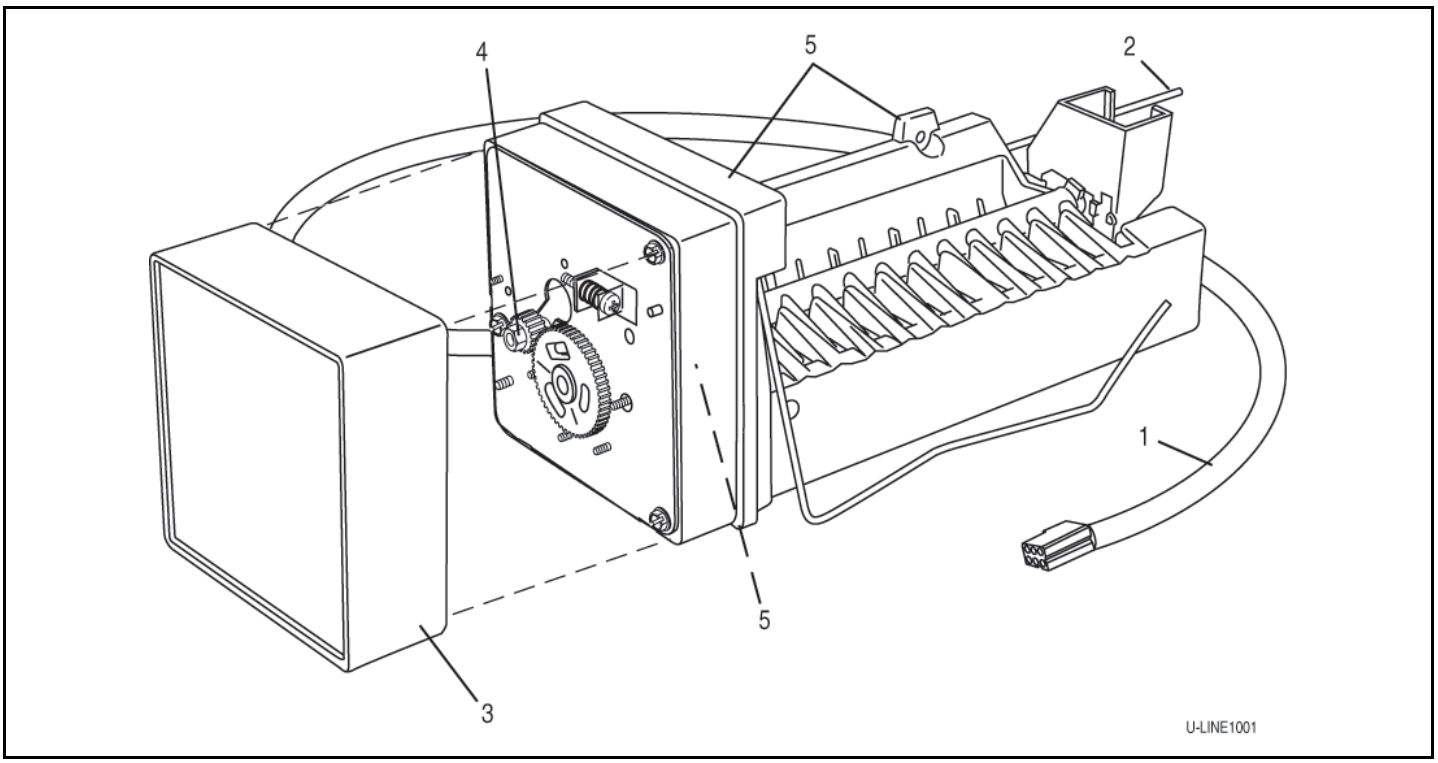

Figure 7. Ice Maker Assembly

REPLACING ICE MAKER ASSEMBLY (ALL MODELS EXCEPT CO29F)

1. Remove back panel.
2. Disconnect all wires at bell connectors (5 wires-Models BI95, BI98 or SP18; or Plug-Models).
3. Remove capillary tube from sensing tube on ice maker assembly (2).
4. Remove water inlet tube.
5. Remove front cover (3)
6. Advance ejector blades to the 3:00 position by turning the 5/16" hex head on the small brass gear counterclockwise (4).
7. Remove two screws from the side wall of evaporator (5).
8. Remove screws from the bottom of the evaporator plate.
9. Remove ice maker assembly from evaporator shelf.
10. Clean alumilastic from evaporator shelf.
11. Apply 1/4" layer of fresh alumilastic to heater side of new ice maker.
12. Replace parts in reverse order of removal.
13. Reconnect all wires.
14. Insert capillary tube into ice maker sensing tube.
15. Insert water inlet tube.
16. Apply permagum to all exit holes. Mount back panel.
17. Mount the back panel.
18. Plug in unit and test.

220 Volt Conversion List

All models listed in this manual are equipped to run on 110/115 volt. This document is a conversion list for the applicable 220 volt parts for the following models:

- SP18
- BI95
- BI98
- SS1095

110V P/N	220V P/N	Description
5263-S	5195	Fan Motor
80-39015-00	628109	I.M. motor (ice makers)
402	619	Ice maker assembly - Models SP18, BI95, BI98 and model SS1095
402-29/1175	620	Ice maker assembly - Models SP18, BI95, BI98 and model SS1095
2552A	2555A	Water valve
5402-S	5404-S	Compressor (ice makers)
150	650	Faceplate assembly
5414	5418	Relay
5413	5417	Overload

Defrost

This unit requires manual defrost, periodically.

Inspect the interior walls for frost build up every 3 - 4 weeks. Defrost your unit when ¼" of frost builds up on the interior walls. Frost will build up faster in humid environments and when the door is opened frequently.

To defrost, remove ice bucket, turn off unit, leave door open, and allow frost/ice to melt naturally. Do not use tools to chip or scrape the frost as it may damage your unit. Use a towel to absorb melting frost/ice. Before turning the unit back on, make sure all the frost is gone and the unit is dry.

Replace Ice Maker

The new ice maker assembly you have received will have a plug-in connection. In some instances you may need to cut plug off from cable and hard-wire the connections.

REMOVE ICE MAKER

1. Unplug the unit.
2. Disconnect ice maker wire harness at plug.
3. Disconnect thermistor plug.
4. Remove water inlet tube.
5. Remove front cover.
6. Advance ejector blade to the 3 o'clock position by turning the 5/16" hex head on the small brass gear counterclockwise.
7. Remove three screws from wall of freezer housing.
8. Remove ice maker assembly.

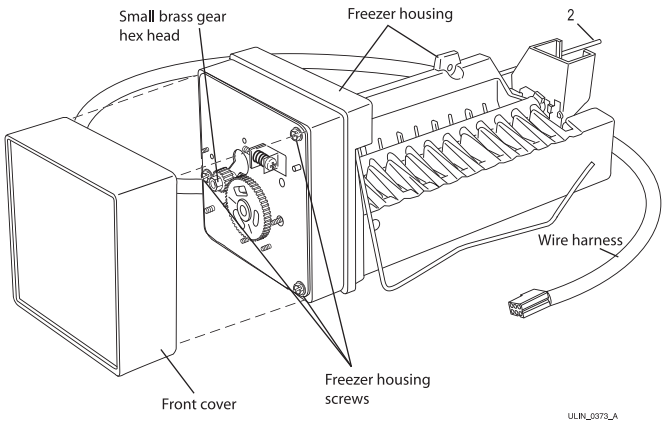

INSTALL ICE MAKER

1. If ice maker sits on evaporator (as shown) be sure to apply the included Alumilastic paste.

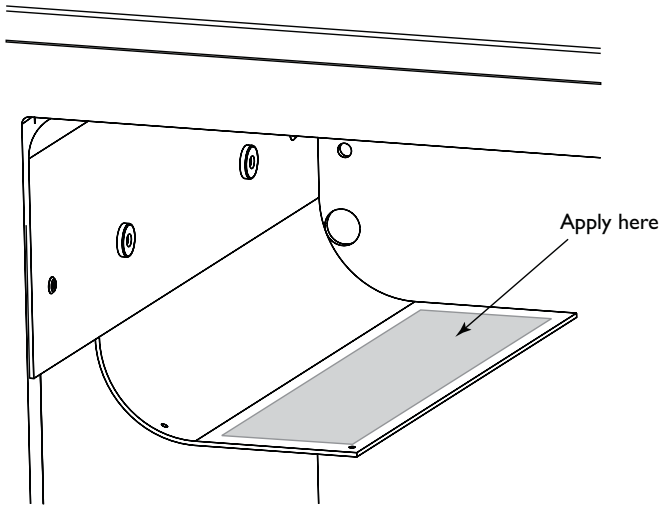

2. Reconnect plug.
3. Reconnect thermistor plug.
4. Insert water inlet tube.
5. Apply Permagum® to all exit holes on back of unit.
6. Install back panel.
7. Plug in unit and test.

U-Line Corporation (U-Line) Limited Warranty

One Year Limited Warranty

For one year from the date of original purchase, this warranty covers all parts and labor to repair or replace any part of the product that proves to be defective in materials or workmanship. For products installed and used for normal residential use, material cosmetic defects are included in this warranty, with coverage limited to 60 days from the date of original purchase. All service provided by U-Line under the above warranty must be performed by a U-Line factory authorized servicer, unless otherwise specified by U-Line. Service provided during normal business hours.

Two Year Limited Warranty (5 Class Product)

For two years from the date of original purchase, this warranty covers all parts and labor to repair or replace any part of the product that proves to be defective in materials or workmanship. For products installed and used for normal residential use, material cosmetic defects are included in this warranty, with coverage limited to 60 days from the date of original purchase. All service provided by U-Line under the above warranty must be performed by a U-Line factory authorized servicer, unless otherwise specified by U-Line. Service provided during normal business hours.

Available Second & Third Year Limited Warranty

In addition to the standard one and two year warranties outlined above, U-Line offers a one year extension of the warranties from the date of purchase, free of charge. To take advantage of this extension, you must register your product with U-Line within 60 days from the date of purchase at u-line.com and provide proof of purchase.

Five Year Sealed System Limited Warranty

For five years from the date of original purchase, U-Line will repair or replace the following parts, labor not included, that prove to be defective in materials or workmanship: compressor, condenser, evaporator, drier, and all connecting tubing. All service provided by U-Line under the above warranty must be performed by a U-Line factory authorized servicer, unless otherwise specified by U-Line. Service provided during normal business hours.

Terms

These warranties apply only to products installed in any one of the fifty states of the United States, the District of Columbia, or the ten provinces of Canada. The warranties do not cover any parts or labor to correct any defect caused by negligence, accident or improper use, maintenance, installation, service, repair, acts of God, fire, flood or other natural disasters. The product must be installed, operated, and maintained in accordance with your product's User Guide.

The remedies described above for each warranty are the only ones that U-Line will provide, either under these warranties or under any warranty arising by operation of law. U-Line will not be responsible for any consequential or incidental damages arising from the breach of these warranties or any other warranty, whether express, implied, or statutory. Some states do not allow the exclusion or limitation of incidental or consequential damages, so the above limitation or exclusion may not apply to you. These warranties give you specific legal rights, and you may also have other rights which vary from state to state.

Any warranty that may be implied in connection with your purchase or use of the product, including any warranty of *merchantability* or any warranty *fit for a particular purpose* is limited to the duration of these warranties, and only extends to five years in duration for the parts described in the section related to the five year limited warranty above. Some states do not allow limitations on how long an implied warranty lasts, so the above limitations may not apply to you.

- The warranties only apply to the original purchaser and are non-transferable.
- The second, third, and five year warranties cover products installed and used for normal residential or designated marine use only.
- The warranties apply to units operated outside only if designed for outdoor use by model and serial number.
- U-Line Commercial products are covered by the one year and 5 year limited warranties and are not eligible for the second and third year limited warranties.
- Replacement water filters, light bulbs, and other consumable parts are not covered by these warranties.
- The start of U-Line's obligation is limited to four years after the shipment date from U-Line.
- In-home instruction on how to use your product is not covered by these warranties.
- Food, beverage, and medicine loss are not covered by these warranties.
- If the product is located in an area where U-Line factory authorized service is not available, you may be responsible for a trip charge or you may be required to bring the product to a U-Line factory authorized service location at your own cost and expense.
- Units purchased after use as floor displays, and/or certified reconditioned units, are covered by the limited one year warranty only and no coverage is provided for cosmetic defects.
- Signal issues related to Wi-Fi connectivity are not covered by these warranties.

For parts and service assistance, or to find U-Line factory authorized service near you, contact U-Line:
8900 N. 55th Street, Milwaukee, WI 53223 • u-line.com • onlineservice@u-line.com • +1.414.354.0300

Copyright © 2020 U-Line Corporation. All Rights Reserved. | Publication Number 30379 | 11/2020 Rev. O