ivation

Dual-Tap Beer Kegerator

SKUS: IVBKADT491B / IVBKADT491SS

User Guide

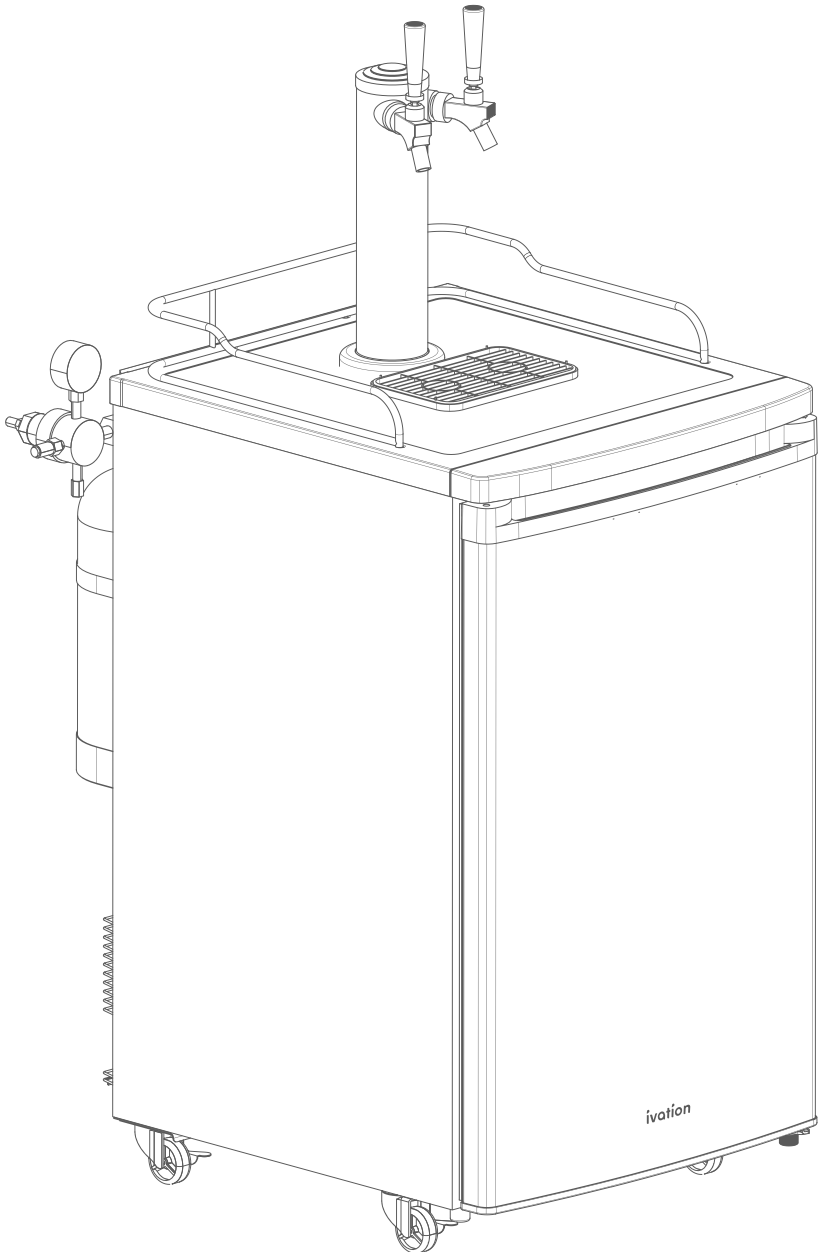

Thank you for purchasing the Ivation® Dual-Tap Beer Kegerator. This User Guide is intended to provide you with guidelines to ensure that operation of this product is safe and does not pose risk to the user. Any use that does not conform to the guidelines described in this User Guide may void the limited warranty.

Please read all directions before using the product and retain this guide for reference. This product is intended for household use only. It is not intended for commercial use.

This product is covered by a limited one-year warranty. Coverage is subject to limits and exclusions. See warranty for details.

TABLE OF CONTENTS

3 **FEATURES**

4 **SAFETY PRECAUTIONS**

7 **PRODUCT OVERVIEW**

8 **PACKAGE CONTENTS**

10 **INSTALLATION**

12 **ASSEMBLY**

18 **USAGE**

19 **CARE**

20 **TROUBLESHOOTING**

28 **SPECS / WARRANTY**

29 **GET IN TOUCH!**

FEATURES

- Dual-tap lines can cool and serve beer from two kegs at once
- Cools beer from low-30's to mid-40's (°F)
- External CO_2 tank mount for additional space inside the refrigeration cabinet
- Automatic defrost and reversible door*
- Easily converts to a beverage cooler or regular refrigerator with two (2) removable wire shelves
- Drip tray and guardrail help protect your floor against spills
- Locking casters add increased maneuverability and stability
- Includes stylish 3-inch chrome beer tap tower

*Door reversal instructions not included; please contact Ivation® Customer Care if you need to reverse your kegerator door

SAFETY PRECAUTIONS

⚠ WARNING: Make sure to thoroughly read and understand all instructions before using this appliance. Improper use of this product could result in extensive product damage, moderate-to-severe personal injury, or death. To reduce the risk of fire, electrical shock, or other injury, please follow these precautions and ensure the appliance is properly positioned and installed.

- ⚠ **WARNING: Entrapment hazard.** This device can create the risk of child entrapment or suffocation. Junked or abandoned appliances can still be dangerous to children. When not in use, store safely away from where children can reach; remove the door; and make sure the shelves are inside, so that children cannot crawl into the unit.
- Always plug your kegerator into a grounded, 3-prong outlet. Never remove the grounding prong.
- Do not use a plug adaptor.
- Do not use an extension cord with this product.
- We recommend plugging your kegerator into its own outlet. Do not connect it to an outlet that can be turned off by a switch or pull-chain.
- Never clean your appliance's parts with flammable fluids. These fumes can create a fire hazard or explosion.
- Do not store or use gasoline or any other flammable liquids or vapors in the vicinity of this or any other appliance. The fumes can create a fire hazard or an explosion.
- Before doing any cleaning or maintenance on this product, make sure that it has been unplugged from the outlet. Failure to unplug the unit before cleaning can result in electrical shock or death.
- Never plug or unplug the unit with wet hands. Do not touch the power cord with wet hands.
- Do not attempt to repair or replace any parts of this appliance unless specifically recommended to do so in this manual. All other servicing or maintenance should be conducted by a qualified service technician.
- Always use two or more people to move and install this kegerator. Failure to do so can result in back or other personal injury, damage to the appliance, and damage to your home.
- To ensure proper ventilation for your kegerator, the front of the unit must be completely unobstructed. Make sure to place the unit in a well-ventilated area where temperatures are consistently above 60°F (16°C) and below 90°F (32°C), and where it is protected from elements such as wind, rain, other moisture or excessive humidity, water spraying, or water drips.

- The appliance should not be placed next to ovens, grills, stovetops, or any other sources of high heat.
- Make sure to that all electrical, water, and drain connections for this kegerator are installed in accordance with state and local codes.
- You will also require a standard electrical supply (115 V AC only, 60 Hz) that is properly grounded in accordance with the National Electrical Code as well as local codes and ordinances.
- Make sure the kegerator is installed in accordance with local plumbing code requirements.
- Do not bend or pinch the kegerator's power supply cord.
- The fuse (or circuit breaker)'s size should be 15 amperes.
- Make sure that the kegerator is level when installed in order for it to function properly. You may need to make adjustments to ensure that it is level.
- Ensure that the pipes are not pinched, bent, or otherwise damaged during the installation process.
- Always check the lines for leaks after connecting them.
- Never allow children to operate, play with, or crawl inside this unit. They may become trapped and risk injury or even death. Keep children away from the kegerator.
- If you choose to use a drainage container rather than connect the pipes to a drain, make sure the drain select switch is set to OFF, or else the water may overflow the drainage container.
- Although this kegerator has been tested at the factory, due to its long-term transit and storage, make sure you discard the first batch of ice cubes.
- Do not use solvent-based or abrasive cleaning agents on the interior of the kegerator. These cleaners may damage or discolor the interior.
- Do not use this kegerator for anything other than its intended purpose.
- Try not to open the door too frequently, especially when the weather is humid and hot. Once you open the door, make sure to close it as soon as possible to maintain temperature stability.
- Regularly check to make sure the unit is sufficiently ventilated and has adequate air circulation behind it.
- In normal temperature conditions, set the thermostat to the middle setting if you are using it for regular refrigeration.
- If you are loading the unit with packages of fresh food to cool, make sure the food has cooled to room temperature before storing it in the unit.
- If there is too much ice or frost inside the unit, it will increase energy consumption. Make sure to clean the appliance once

the frost reaches a layer thickness of 0.12-0.2" (3-5 mm).

- Make sure the rear wall is clean and free of dust or any impurities.

⚠ CO_2 GAS WARNINGS ⚠

CO_2 gas canisters contain high-pressure compressed gas, which can be hazardous if not handled properly. Make sure you thoroughly read and understand the following precautions and procedures for CO_2 canisters prior to installation of the unit.

1. Always connect the CO_2 canister to a regulator. Failure to do so could result in an explosion, injuries, or death when the canister valve is opened.
2. Never connect the CO_2 canister directly to the product container.
3. Always follow proper procedures to change the canisters.
4. Always secure the canister in an upright position.
5. Never drop or throw a CO_2 canister, as this could result in injuries or death.
6. Always keep a CO_2 canister away from direct heat. Store extra canisters in a cool place with a stable temperature around 70°F (21.1°C), and secure them in an upright position using a chain.
7. Always make sure to immediately ventilate and vacate the area if a CO_2 leakage has occurred.
8. Always check the D.O.T. test date on the canister neck before installing it. If over five (5) years has passed, do not use the canister, and return it to the supplier.
9. Never connect a keg to the canister unless there are two (2) safeties in the pressure system:
   a. At or on the CO_2 regulator
   b. At or on the product coupler/in the pressure gas line

PARTS

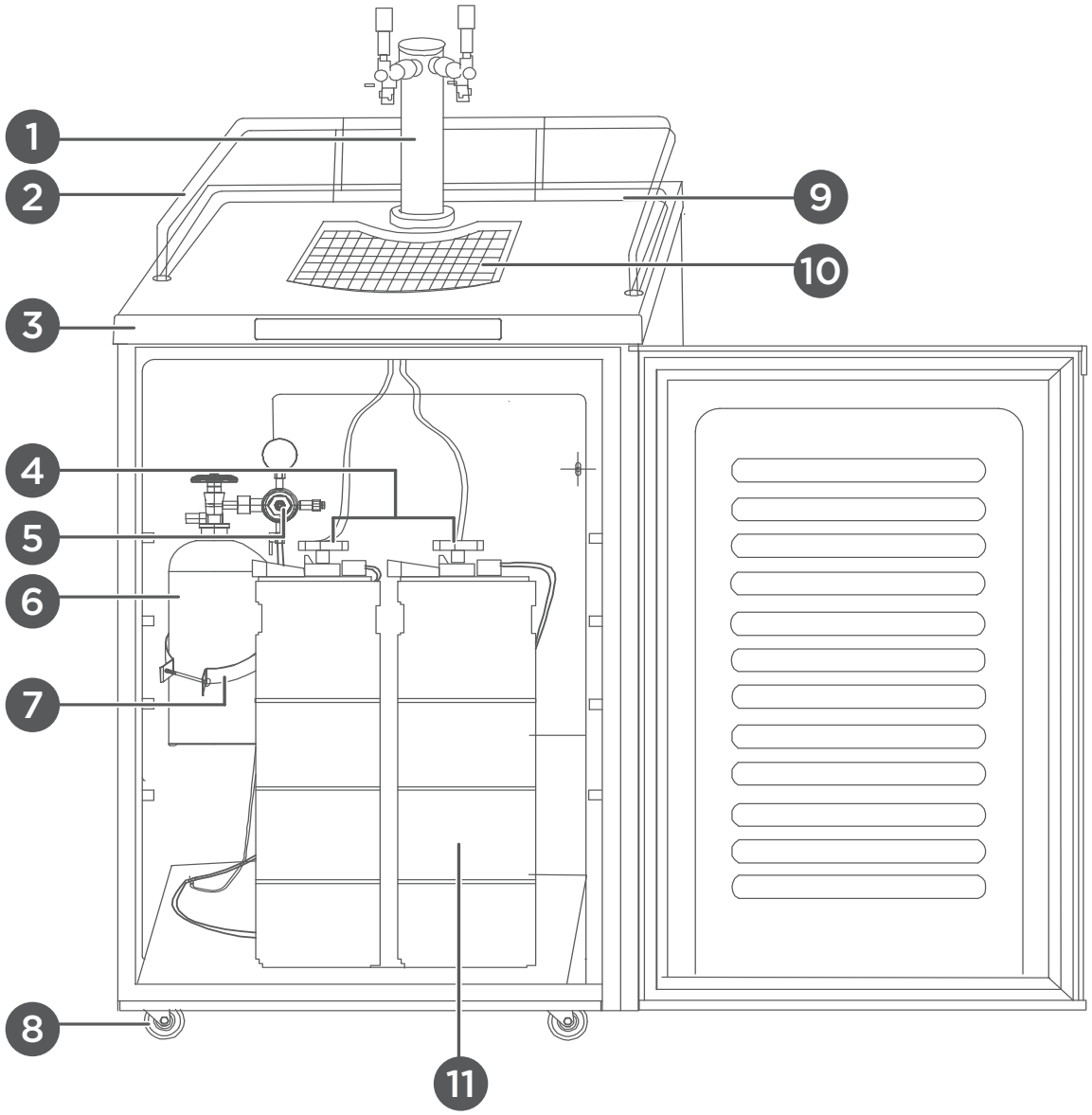

1. Draft arm assembly
2. Guardrail
3. Worktop
4. American Sankey Keg Couplers
5. CO_2 tank regulator
6. CO_2 tank (empty)
7. CO_2 tank retainer
8. Locking casters
9. Thermostat (at rear of unit)
10. Drip tray
11. Keg

PACKAGE CONTENTS

CABINET ASSEMBLY



A
Wire shelf

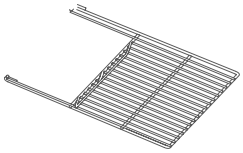

B
Wire half-shelf

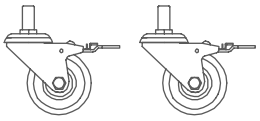

C
Locking casters
(2 pcs.)

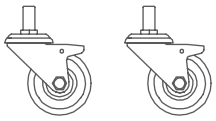

D
Casters
(2 pcs.)



E
Metal washers for
locking caster
wheels (2 pcs.)



F
Drip tray
(2 pcs.)



G
Metal wrench
for cleaning

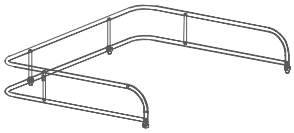

H
Guardrail

KEG ASSEMBLY

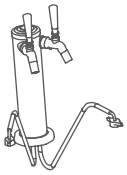

I
Dual-draft arm
assembly



J
Beer tap handle
(2 pcs.)

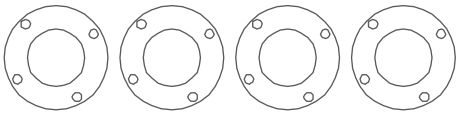

K
Dual-tap beer gasket
(4 pcs.)

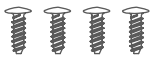

L
Dual-tap beer screws
(4 pcs.)

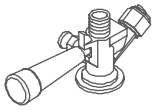

M
D-type keg coupler
(2 pcs.)

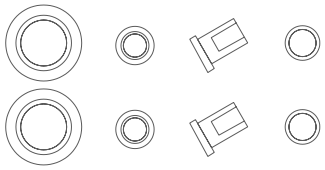

N
Extra valve washers
(2 ea.)

CO_2 ASSEMBLY

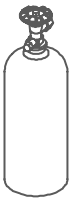

O
CO_2 tank (empty)

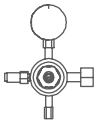

P
CO_2 regulator

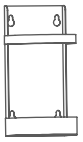

Q
CO_2 back tank retainer for optional rear tank mount



R
CO_2 gas lines (3 pcs.)



S
CO_2 tank retainer (preinstalled)



T
Hose clamps (4 pcs.)



U
Bolt and nut for tank retainer



V
T-connector

PACKAGE CONTENTS

BEFORE SETUP

1. Prior to connecting the beer dispenser to an outlet, allow it to stand upright for approximately two (2) hours. This will reduce the possibility of any cooling system malfunctions from being handled during transportation.
2. Clean the interior of the unit with a soft cloth and lukewarm water.

POSITIONING THE KEGERATOR

- Place your kegerator on a level floor that is strong enough to support it with a full keg inside.
  NOTE: this appliance is designed to be free-standing only. It should never be installed as a recessed or built-in unit.
- Allow 3" (7.62 cm) of space between the back and sides of the kegerator for proper air circulation to cool the compressor and condenser.
- Ensure the kegerator is positioned in a location away from direct sunlight, any heat-generating appliances, or any other heat sources. Direct sunlight may damage or affect the acrylic coating, and heat sources increase power consumption and also can cause a safety hazard.
- Make sure the unit is installed in a place that is not subject to extreme cold ambient temperatures, as these can cause it not to function properly.
- Make sure the unit is installed in a location where it will not be exposed to moisture or excessive humidity.
- Plug the unit into an exclusive, properly installed and grounded wall outlet. Never, under any circumstances, cut or remove the grounding prong from the power cord. Any questions regarding power and/or grounding should be directed to a certified electrician or an authorized product service center.
- Once the unit has been plugged in, allow 2-3 hours for it to reach the proper cooling temperature before placing anything in the keg compartment.

⚠ ADDITIONAL ELECTRICAL PRECAUTIONS

- Improper use of the grounded plug can result in the risk of electrical shock. If the power cord has been damaged, you

will need to have it replaced by an authorized service center. Contact Ivation® Customer Support if your power cord has been damaged.

- This appliance needs to be properly grounded for your safety. The power cord is equipped with a three-prong plug that can be connected to a standard three-prong wall outlet to minimize the possibility of electrical shock.
- This unit requires a standard 115/120 volt AC ~/60Hz electrical outlet with a three-prong grounding port. Make sure to have the wall outlet and circuit checked by a qualified electrician before installation to ensure that it is properly grounded.
- If you only have a two-prong outlet where you want to install the unit, you will need to either choose a new location, or have a qualified electrician replace the two-prong outlet with a properly grounded three-prong outlet.
- Always secure the cord behind the kegerator. Never leave it exposed or dangling, as this could result in product damage, an electrical shock hazard, or other accidental injury.
- Always plug the kegerator into its own individual electrical outlet with a voltage rating that matches its rating label. This ensures the best performance and prevents overloading house wiring circuits, which can cause a fire hazard from overheating when overloaded.
- Never unplug the kegerator by yanking the power cord. Always grip the plug firmly and pull straight out from the outlet.
- Repair or replace immediately all power cords that have become frayed or otherwise damaged. Do not use a cord that has cracks or abrasion damage along its length, or at either end. Always check the cord for damage before plugging in the kegerator. When moving the unit, be mindful to avoid rolling over the cord or otherwise damaging it.
- Because of potential safety hazards under certain conditions, we strongly advise against using an extension cord with this unit. Ivation® is not liable for any damages or injuries that occur as a result of you using an extension cord. If you choose to use an extension cord (which you should not do), it absolutely must be a UL/CUL-listed, three-wire grounding-type appliance extension cord, utilizing a grounding-type plug, with an electrical rating of 115 volts and at least 10 amperes. However, again, you should not use an extension cord.

REVERSING THE DOOR ON YOUR KEGERATOR

This kegerator has the capability of the door opening from either the left or right side. It is delivered with the door opening from the left side. If you wish to reverse the direction in which it opens, please contact customer care for reversal instructions.

ASSEMBLING YOUR KEGERATOR

INSTALLING THE CASTERS (OPTIONAL)

1. Remove all the contents of the kegerator and tip it onto its back.
2. Attach the two metal washers (included) to the locking casters, to prevent scratching the cabinet, and then attach the two locking casters in the front underneath the kegerator. You will need to puncture the white plastic to attach the casters.
3. Install the other two non-locking casters in the rear underneath the kegerator as shown below.

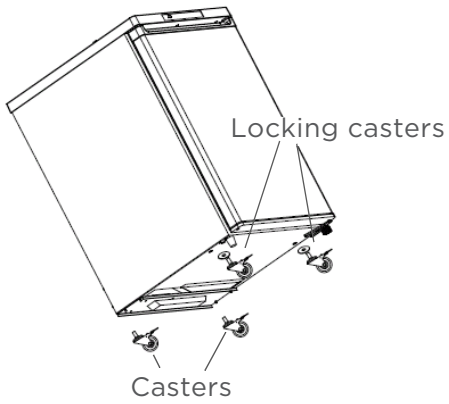

4. Unscrew and remove the black feet in the front of the unit. Store them in a safe place in case you want to remove the casters and simply use the feet at a later time.
5. Once all four casters are evenly tightened, return the unit to an upright, standing position.
6. Step on the front of the locking casters to lock the kegerator into place and prevent it from rolling. Step on the back of the locking casters while locked to unlock them and allow the wheels to roll.

ATTACHING THE GUARDRAIL

Insert the guardrail into the corresponding holes on top of the kegerator.

INSTALLING THE DRAFT ARM ASSEMBLY

1. Remove the round cabinet plug from the top of the kegerator. You may need to push the cabinet plug up from inside the unit. Make sure to store the plug in a safe place in case you decide to convert the unit to a standard beverage cooler instead of a kegerator.

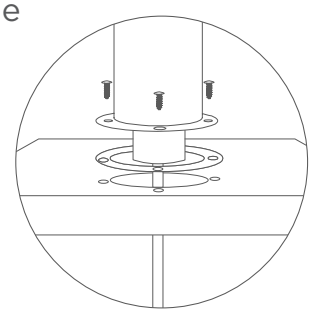

   a. Place the dual-tap beer-tap gasket over the opening, aligning the four holes in the gasket with the holes on top of the unit.
   b. Pass the wingnuts and the beer tubes (attached to the draft arm assembly) through the opening in the unit until the draft arm assembly rests comfortably on top of the cabinet.
   c. Align the holes in the draft arm assembly with the holes in the gasket.
   d. Use the four provided screws to attach the draft arm assembly to the worktop. The final assembly should look like the diagram below:

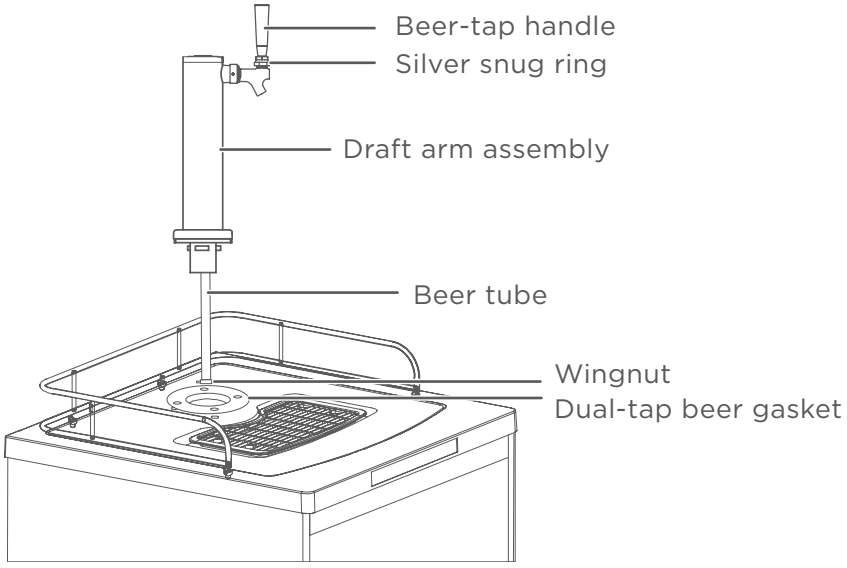

2. Attach the black plastic beer-tap handle to the top of the faucet, tightening by hand until it's secure. Hold the silver snug ring so it does not move.

   NOTE: If there is a small drip after pouring a beverage, the beer-tap handle may be too tight. If this happens, unscrew the silver snug ring by one turn, and then re-tighten the beer-tap handle.

INSTALLING THE CO_2 REGULATOR AND TANK

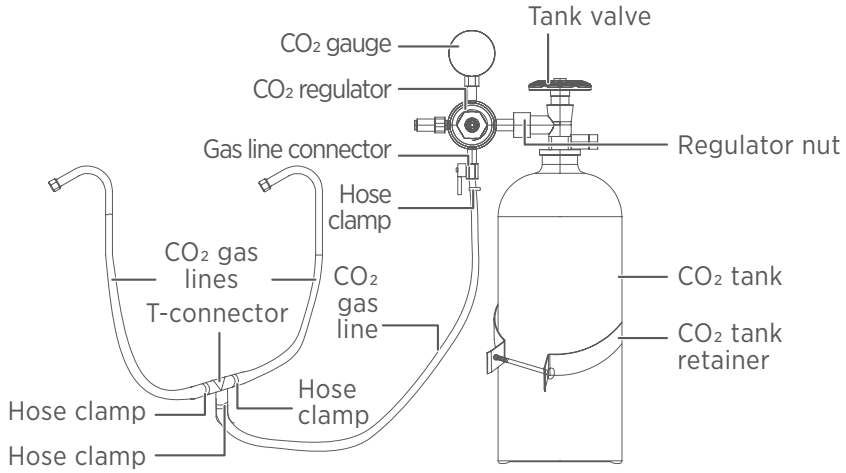

Before installing the regulator and tank, please review the CO_2 Gas Warnings on page 6.

1. Feed a hose clamp over one end of the CO_2 gas line that does not have a connector on either end.
2. Attach that end to the gas line connector on the CO_2 regulator.
3. Tighten the clamp to prevent leaks. Leave about ½" (1.27 cm) between the top of the clamp and the end of the hose. You may need to use a pliers or crimper to squeeze the clamp.
4. Feed a hose clamp over the other end of the CO_2 gas line.
5. Insert the T-connector into the end of the gas line, then tighten the hose clamp. Leave about ½" (1.27 cm) between the top of the clamp and the end of the hose.
6. Feed a hose clamp over the non-threaded ends of the other two CO_2 gas lines.
7. Connect the gas lines to the ends of the T-connector, then tighten the hose clamps. Leave about ½" (1.27 cm) between the top of the clamp and the end of the hose.
8. Attach the CO_2 regulator to the CO_2 tank by screwing the regulator nut onto the CO_2 tank valve and tightening it with an adjustable wrench.

OPTIONAL: This unit allows you the option to install a tank retainer on the back of the unit to allow extra space inside the unit. An additional CO_2 rear tank retainer is included for this purpose in the accessories.

ATTACHING THE CO_2 TANK

You have two options for attaching the tank:

1. Install the tank inside the kegerator for a cleaner look.

    a. Attach the tank through the retainer, and secure it with the provided bolt and nut.
    b. Position the tank so you can read the gauge and have easy access to the shut-off valve.

2. Install the tank at the rear of the kegerator to allow extra space inside the unit.

    a. Align the four holes on the CO_2 tank retainer with the four slots on the back of the kegerator.
    b. Use screws to fasten the retainer into the holes.

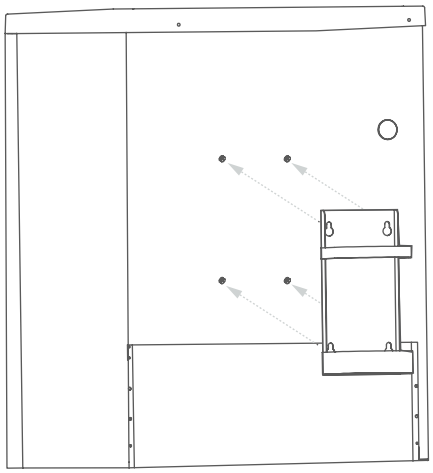

    c. Place the CO_2 tank in the retainer.
    d. Feed the gas line hose through the hole in the back of the unit and connect it to the regulator in accordance with the steps in the Installing the CO_2 Regulator and Tank section on page 14.

INSTALLING AND SETTING UP A BEER KEG

This kegerator and beverage cooler fits almost all brand-name kegs, with the exception of Coors® kegs.

Keg sizes that can be used in your kegerator are as follows:

Barrel	Gallons	Liters	Ounces	12 oz. Glasses
½	15.5	59	1984	164
¼	7.8	30	992	82
⅙	5.2	20	661	55
⅛	4.0	15	496	41

INSTALLING THE KEG COUPLER

1. Insert the keg coupler into the neck of the beer keg and turn it clockwise to lock it into position.

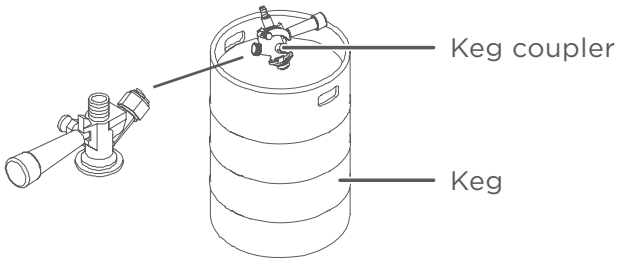

2. Make sure the washer is in place in the connector on the side of the keg coupler, then attach the CO_2 gas line to the connector.

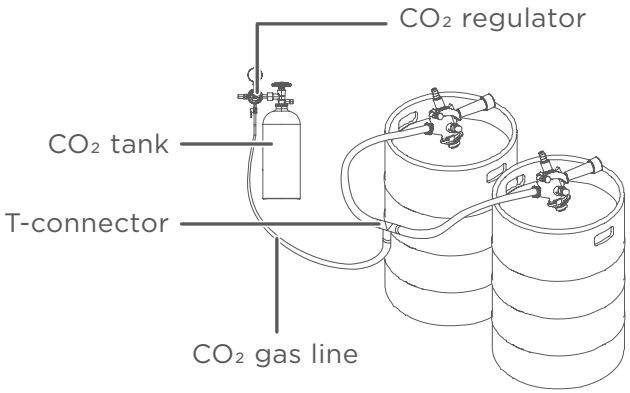

3. Make sure the washer is in place in the connector on top of the keg coupler, insert the beer tube into the top of the keg coupler. Tighten the wingnut.
4. Repeat steps 1-3 if you have a second keg.
5. Pull the black handle on the keg coupler and press downward until it locks into position. The keg is now tapped.

ADJUSTING THE CO_2 REGULATOR

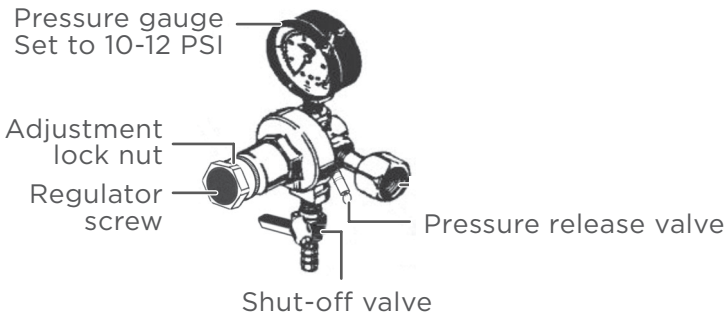

1. Make sure that the shut-off valve is closed (it should be horizontal when closed, vertical when open), and then slowly turn the main valve on the CO_2 tank counter-clockwise until it is fully open.
2. Open the shut-off valve, allowing gas to flow into the keg.
3. Release the adjustment lock nut, located behind the regulator screw, by turning it clockwise about 5-7 turns.
4. Turn the regulator screw clockwise to increase the pressure. You should see the needle on the pressure gauge climbing as the pressure increases. The ideal pressure level is between 10-12 PSI.
5. When the gauge reaches the correct pressure level, tighten the adjustment lock nut by turning it counterclockwise.
6. Allow several minutes for the keg to pressurize. The gauge may drop in pressure as this process completes; if this happens, you may need to release the adjustment lock nut and adjust the regulator screw to reach the correct pressure level again, then retighten the adjustment lock nut.

   NOTE: Make sure to listen for a hissing sound at all connections to ensure that there are no leaks.
7. Once the keg has fully pressurized and the pressure gauge is stable between 10-12 PSI, plug the kegerator into a 120V, 60Hz, 15A grounded outlet.

CONVERTING THE KEGERATOR TO A GENERAL REFRIGERATOR

1. Turn the control knob to the OFF position.
2. Close the main valve on the CO_2 canister.
3. Close the secondary shut-off valve on the regulator pipe.
4. Close the connection between the beer keg and the keg coupler.
5. Drain any remaining beer from the lines.
6. Disconnect the beer line and CO_2 air line from the keg coupler.
7. Remove the beer keg and the bottom metal plate from the unit.
8. Remove the keg coupler.
9. Disconnect the air line from the CO_2 canister.

10. Remove the CO_2 air line from the cabinet opening.
11. Replace the plug in the cabinet opening where you just removed the air line.
12. Remove the beer tower and pull the beer line through the top of the cabinet.
13. Replace the plug in the top of the cabinet where the beer line had been.
14. Remove the guard rail and use the provided plugs to fill the guardrail holes.
15. Place the two provided wire shelves in the designated positions.
16. Adjust the thermostat to the desired temperature.

OPERATING YOUR BEER DISPENSER

SETTING THE TEMPERATURE

Turn the temperature control knob to the maximum setting (6) to quickly reach the coldest temperature, then allow the kegerator to run for three (3) hours. The thermostat ranges from 36°F to 45°F (2.2°C to 7.2°C).

While storing and dispensing your draught beer, remember that the optimum temperature for serving it is between 34°F and 38°F (1.1°C and 3.3°C).

To turn off the cooling cycle, turn the control knob to the OFF position.

NOTE: You should keep an accurate thermometer handy to check the temperature of the unit and adjust the temperature control settings as required according to your needs.

AUTOMATIC DEFROSTING

This unit defrosts on its own, and there should be no need for you to manually defrost it. The defrosted water collects and passes through the drain outlet in the rear wall, into a tray located above the compressor, where it evaporates.

NOTES:

- *If the unit is unplugged, loses power suddenly, or is turned off, you must wait three (3) to five (5) minutes before restarting it. The kegerator will not power back on sooner than this.*
- *When you turn the temperature control knob to the OFF position, it stops the cooling cycle, but does not shut off power to the unit.*

CARE AND MAINTENANCE

CLEANING THE KEGERATOR

1. Turn the temperature control knob to OFF, unplug the kegerator, and remove the contents.
2. Wash the inside surfaces with a solution comprised of 2 tbsp. baking soda and 1 qt. warm water.
3. Wash the shelves and metal plate (if needed) with a mild detergent solution.
4. Make sure to only use a damp sponge or cloth with excess water wrung out when cleaning around areas near the controls or any other electronic parts.
5. Wash the outside of the cabinet with warm water and a mild liquid detergent. Rinse well and wipe the unit dry with a soft, clean cloth.

SHORT-TERM AND LONG-TERM UNIT STORAGE

- The kegerator can be left running if not being used (e.g. while you are on vacation) for periods of less than three (3) weeks.
- If the kegerator will not be used for periods longer than three (3) weeks, remove the contents and unplug the power supply cord. Thoroughly clean and dry the interior, and leave the door open slightly to prevent odors and mold growth.

MOVING THE KEGERATOR TO A NEW LOCATION

- Remove all the contents.
- Tape down and secure any/all loose items inside the kegerator.
- Tape the door shut.
- Transport the unit to the new location, making sure that it stays securely in the upright position. Cover the outside with a blanket or similar item during transportation to prevent dents, dings, and scratches.

Cloudy Beer: Beer in glass appears hazy, and not clear

	Possible Causes	Solutions & Explanations
1	Over-chilling kegerator and/or beverage lines	Excessively low temperatures may cause hazy, cloudy beer, especially if the beer has been sitting in the cold lines for an extended period of time. Make sure that the lines are cleaned, then raise the temperature slightly.
2	Beer tap was partially opened instead of fully opened	Always open the tap faucet quickly and completely. Never open it partway. Replace any worn washers and other parts in the tap faucet to ensure the faucet always opens fully.
3	Air source could be contaminated. If possible, switch to gas as a pressure source. Defective Thomas or tongue vents.	See solution #7 in the Flat Beer section on page 21. Always draw fresh air from an outside source into the compressor. Attach a hair felt filter to the outside intake, in addition the existing filter within the line itself. Bacteria growth may have developed as a result of beer backing up through defective Thomas or tongue vents in the air line, which air pressure then carries into the beer barrel. Check and replace the defective vents frequently, and always thoroughly clean the air lines.
4	General conditions that may also cause cloudy beer.	See solutions #5, 7, and 8 in the Flat Beer section on page 21 , or solutions #2, 5, 6, and 7 in the Wild Beer section on pages 25 - 26.
5	Unrefrigerated food placed on top of cold keg.	When unrefrigerated products such as meats, vegetables, fish, or fruit, are placed on top of a cold keg, it causes the beer to become warm before the products become cooled down to the keg temperature. This change in temperature also can cause cloudy beer.

Flat Beer: Foamy head disappears quickly, and/or beer lacks the usual brewery-fresh flavor

	Possible Causes	Solutions & Explanations
1	Grease on the glass.	Don't wash your beer glasses together with glasses that have been used for milk or similar fatty substances (including lipstick!). Make sure lipstick has been removed from glassware if stained. An excess amount of germicides can also build up and leave a greasy film on the glass. Where health laws permit doing so, it's better to steam and sterilize your beer glasses. Wash glasses thoroughly with a quality detergent. DO NOT USE SOAP. Don't wipe glasses to dry them. Allow glasses to air-dry by placing them on wire or corrugated metal. Rinse the glass in fresh, cold water before serving beer in it. Beer is best served in a wet glass.
2	Beer was improperly drawn into the glass.	Always open the tap faucet quickly and completely. Never open it partway. Make sure you have checked to find the best distance to keep the glass away from the tap while drawing the beer. The foam should create a tight, creamy head, and the collar on the average glass should be between ¾" and 1"high. If beer is incorrectly drawn with no head, it may appear to be flat, despite not being flat.
3	Not enough pressure is being provided to the keg lines.	Check the pressure gauge to make sure it's still between 10-12 PSI, and adjust if necessary.

4	Defective Thomas or tongue vents. Pressure may be shut off.	Check all the washers frequently, particularly the ones connected to the air vents. A clogged vent will obstruct the flow of air or CO_2. Check the pressure source, or the power source if you are using an air compressor. The air compressor should never be connected to a light switch. Make sure to use a separate electric plug outlet for the compressor. Check the CO_2 tank to see if it is empty. If empty, replace. Refer to Installing the CO_2 Regulator and Tank on page 14 for the proper procedure. When the keg is tapped and proper pressure has been applied, make sure to keep the pressure on until the keg is empty. Make sure to apply and adjust the pressure before drawing beer from the keg, or else it will be wild to start and flat at the end.
5	Pre-cooler or beer system is too cold.	Check the temperature in the pre-cooler or inside the unit's refrigeration cabinet with an accurate thermometer. The temperature at the tap should always be at least two (2) degrees colder than at the pre-cooler or inside the refrigeration cabinet.
6	Sluggish pressure regulators.	A regulator seat, or the regulator diaphragm, may need to be replaced. Check the same spots as suggested in solutions number 3 and 4.
7	Contaminated air source. Oil or grease fumes.	Make sure all air is filtered after leaving the compressor. Oil fumes from the compressor or kitchen grease fumes, if pumped into the beer keg, will cause the beer to be flat. If possible, CO_2 gas should be used as a pressure source.

8	Moisture in the air system.	If you're using an air compressor instead of gas as a pressure source, it is imperative for you to have a moisture trap installed in the pre-cooler, and you need to drain it daily. In addition, we recommend installing an activated charcoal filter to purify the air before it enters the barrel. With tank-type compressors, drain the tank weekly. Make sure to drain all moisture traps daily.
9	Rapid air movement through beer being drawn.	A fan, exhaust blower drawing in air, or blowing out air, across the bar from where beer is being drawn, may cause the head of foam to fall quickly. Fans or blowers should be positioned such that air does not move directly across where the beer is being drawn.

Loose Foam: Large, soap-like bubbles (sometimes called fish-eyes) are present in the foam. Foam settles quickly.

Possible Causes	Solutions & Explanations
Generally is a flat beer condition.	Follow the possible causes/solutions listed in the Flat Beer section.

Off-Taste Beer: Beer flavor is bitter and biting, sometimes completely stinking, with a generally unpleasant taste.

NOTE: Beer lines should be flushed after each keg is emptied. Maintain clean, fresh, sanitary conditions at the bar. Smoke, kitchen odors, bug sprays, and disinfectant will damage the flavor of beer and make it unpalatable. These conditions may come from an air source or from actual contact with bar glassware.

	Possible Causes	Solutions & Explanations
1	Improper cleaning or no cleaning of the coils, hose, leads, and direct-draw system.	Make sure to thoroughly clean coils at least once a week. Brush and clean the beer taps. (See solution #2 in the Wild Beer section on page 25.) Scour the taps, rods, and tap-seal fitting with detergent, and then rinse them clean. Direct-draw systems must also be cleaned, same as the coil systems. 4 feet of direct draw line accumulates as much per foot as any other system. Make sure the direct-draw system is clean.

2	Contaminated air line. Defective Thomas or tongue vents.	Examine the air hoses, air lines, and vents. If contaminated, replace them. Dirty air lines should be washed using a cleaning compound normally used for cleaning the coils, and then rinsed clean.
3	Rubber hose has absorbed and retained odors.	A rubber hose will always absorb and retain foul odors, resulting in foul-tasting beer. We recommend any approved vinyl tubing for hoses, as vinyl does not absorb moisture and is not affected by oily substances. A fresh, outdoor air line is imperative when air is the pressure source.
4	Unfiltered air; air is moisture-ridden or oily	Make sure the air is always filtered. Check solution #8 in the Flat Beer section on page 23.

Sour Beer: Tastes and smells extremely yeasty, or moldy.

	Possible Causes	**Solutions & Explanations**
1	Contaminated air line. Defective Thomas or tongue vents.	See solution #3 in the Cloudy Beer section on page 20. See solution #2 in the Off-Taste Beer section page 24. See solution #7 in the Flat Beer section on page 22.
2	Improper transportation of beer barrels. Beer that's delivered on an open truck during high summer temperatures may set off secondary fermentation.	Make sure your beer barrels are delivered on a closed-body, refrigerated truck. If you're transporting a beer barrel in a pickup truck or similar open-body vehicle, cover barrels with a tarp to protect them against the heat. Make sure the truck is not loaded the night before delivery, unless it is refrigerated.
3	Improper refrigeration and keg rotation.	Always follow the rule that the first barrel in is the first barrel tapped. Make sure to keep kegs refrigerated even when not in use. Sour beer results from secondary fermentation, which occurs when the beer barrel temperature rises above 45°F (7.2°C). Make sure you purchase your kegs from a location where beer barrels are either refrigerated, stored in ice, or covered with tarp. The ideal temperature for storing kegs is between 38°F and 40°F (3.3°C and 4.4°C).

Wild Beer: Beer comes out as either all foam, or too much foam and not enough liquid.

	Possible Causes	Solutions & Explanations
1	Beer was improperly drawn into glass.	Always open the tap faucet quickly and completely. Never open it partway. Make sure you have checked to find the best distance to keep the glass away from the tap while drawing the beer. The foam should create a tight, creamy head, and the collar on the average glass should be between ¾" and 1" high.
2	Yeast growth or other obstructions in the tap.	Make sure to clean the tap spout with a good brush every day. Scour all internal tap parts at least once a week.
3	Kinks, dents, or twists in the coils or direct-draw lines; or obstructions in the lines near or behind the tap.	Check for and replace any kinked, dented, or twisted lines from the keg to the tap. Check for a frayed coupling behind the tap that may cause an obstruction.
4	Sag or trap in line.	Keep all metal beer lines straight from the barrel to the tap. Never permit the lines to sag or droop, this can create a trap that causes wild beer.
5	Beer too warm at the tap, in the coil system, or in the air shaft system.	Make sure the temperature at the tap is at least 2° colder than at the beer barrel. In a sweet-water refrigerated or ice-water system, make sure the faucet shank is always submerged. In a cold-air system, make sure the coldest air from the blower is first directed to the tap, and then circulated back to the pre-cooler.
6	Hot spots in the line.	Make sure all beer lines are insulated; a long beer run must be constantly refrigerated. Insulation helps, but insulation is not refrigeration. Keep all beer lines away from hot water pipes, hot air ducts, and steam pipes. A cold steam pipe in the summer is a hot steam pipe in the winter.

7	Pre-cooler or direct-draw dispenser is too warm.	Maintain the pre-cooler and direct-draw dispenser temperature at 40°F (4.4°C) all year round. If you can't lower the direct-draw temperature, increase the applied pressure; however, you'll need to balance the system by changing to a smaller diameter length of vinyl tubing for the lines, or install a foam-control tap. Never shut off the refrigeration.
8	No cold storage space for delivered beer, resulting in beer becoming warm in the keg.	Coil and direct-draw systems must be properly balanced, in order to apply the pressure required for the warmest temperature to which the beer kegs will be exposed. A control beer tap can be used in place of a restricted coil to balance the system.
9	Too much air pressure.	Check the pressure source, and adjust the pressure to suit a properly balanced system. If the beer flow is correct, you should be able to fill a 10 oz. beer glass in four (4) seconds at the proper temperature. Check for and replace a creeping regulator and gauge.
10	Excess CO_2.	Adjust the pressure to as low as possible when using CO_2; however, remember that the applied pressure must be slightly higher than the internal pressure of the beer (no more than 18 lbs. should be applied). The colder the beer, and the higher the applied CO_2 pressure, the more rapidly the CO_2 will be absorbed by the beer. If the pressure is too high, this causes over-carbonation, resulting in Wild Beer.
11	Not enough pressure. No pressure.	Check for defective air vents. Refer to solutions #3 and #4 in the Flat Beer section on page 21 - 22. Always turn on the pressure before drawing beer.
12	Beer is old.	Rotate the stock. Make sure you tap the oldest beer first, because if beer has been allowed to stand in temperatures above 45°F (7.2°C) for an extended period of time, it will cause secondary fermentation, resulting in Wild Beer. Make sure your beer is always stored at 38°F – 40°F (3.3°C – 4.4°F).

Tail-End Beer: Draws well at the beginning of the barrel, but becomes flat toward the end. This occurs more often when the beer turnover is slow.

Possible Causes	Solutions & Explanations
When air is being used as a pressure source, air can replace the CO_2 in the beer, resulting in flat beer. When beer is being drawn quickly, this problem is not as evident.	Wherever possible, you should use CO_2 gas as your pressure source. In high-pressure systems, where CO_2 gas cannot be used, a banner air-gas blender should be installed. This introduces a small amount of CO_2 back into the beer and helps maintain a normal CO_2 content in the beer.

Other Troubleshooting

Before giving our customer service department a call, we recommend that you check your issue against this table and try the suggested solutions.

Issue	Possible Causes
Kegerator does not work.	Kegerator may not be plugged in. Circuit breaker may have been tripped or blown a fuse. Temperature control knob may be in the OFF position.
Kegerator frequently turns on and off.	Room temperature may be warmer than normal. The door to the kegerator may be opened too frequently. Kegerator door may not be completely closed. Temperature control may not be correctly set. Door gasket may not seal properly. Kegerator may not have the correct clearances. Ensure the area to the rear and sides around the unit is free of obstructions.
Kegerator vibrates.	This is a feature, not a bug. Kegerator may be unstable, ensure that it is positioned on a level surface.
Kegerator makes too much noise.	The flow of refrigerant may cause a rattling noise. This is normal. At the end of each cooling cycle, you may hear gurgling sounds, which are caused by the flow of refrigerant inside your kegerator. Contraction and expansion of the inside walls during the cooling process may also cause popping and/or crackling sounds. Other noises may be caused by the kegerator not sitting level.
Kegerator door does not close properly.	Kegerator may not be sitting level. Door may have been reversed and not installed properly. Door gasket may be dirty. The shelves, metal plate, or beer keg may be out of place inside the unit.

TECHNICAL SPECIFICATIONS

Rated Power: 115 V/ 60 Hz
Net Weight: 90.4 lbs (41 kg)
Dimensions (W x D x H): 20.1″ x 24.8″ x 33.5″ (51 x 63 x 85 cm)
Thermostat Range: 27°F to 45°F (-3°C to 7°C)
Max Keg Size: ½ barrel (or two ⅙ barrel)

WARRANTY INFORMATION

LIMITED WARRANTY ON IVATION® DUAL-TAP BEER KEGERATOR

THIS LIMITED WARRANTY GIVES YOU SPECIFIC LEGAL RIGHTS AND YOU MAY ALSO HAVE OTHER RIGHTS, WHICH VARY FROM STATE TO STATE.

WE WARRANT THAT DURING THE WARRANTY PERIOD, THE PRODUCT WILL BE FREE FROM DEFECTS IN MATERIALS AND WORKMANSHIP.

LIMITATION OF LIABILITY

TO THE EXTENT NOT PROHIBITED BY LAW, THIS WARRANTY IS EXCLUSIVE AND IN LIEU OF ALL OTHER WARRANTIES, ORAL, WRITTEN, STATUTORY, EXPRESS OR IMPLIED. EXCEPT FOR THE EXPRESS WARRANTIES CONTAINED IN THIS LIMITED WARRANTY STATEMENT AND TO THE EXTENT NOT PROHIBITED BY LAW, WE DISCLAIM ALL OTHER WARRANTIES, EXPRESSED OR IMPLIED, STATUTORY OR OTHERWISE, INCLUDING WITHOUT LIMITATION, THE WARRANTIES OF MERCHANTABILITY AND FITNESS FOR A PARTICULAR PURPOSE. SOME STATES DO NOT ALLOW DISCLAIMERS OF IMPLIED WARRANTIES, SO THIS DISCLAIMER MAY NOT APPLY TO YOU. TO THE EXTENT SUCH WARRANTIES CANNOT BE DISCLAIMED UNDER THE LAWS OF YOUR JURISDICTION, WE LIMIT THE DURATION AND REMEDIES OF SUCH WARRANTIES TO THE DURATION OF THIS EXPRESS LIMITED WARRANTY.

OUR RESPONSIBILITY FOR DEFECTIVE GOODS IS LIMITED TO REPAIR, REPLACEMENT OR REFUND AS DESCRIBED BELOW IN THIS WARRANTY STATEMENT.

WHO MAY USE THIS WARRANTY? C&A Marketing, Inc. located at 114 Tived Lane East, Edison, NJ (**“we”**) extend this limited warranty only to the consumer who originally purchased the product (**“you”**). It does not extend to any subsequent owner or other transferee of the product.

WHAT DOES THIS WARRANTY COVER? This limited warranty covers defects in materials and workmanship of the Ivation® dual-tap beer kegerator (the **"product"**) for the Warranty Period as defined below.

WHAT DOES THIS WARRANTY NOT COVER? This limited warranty does not cover any damage due to: (a) transportation; (b) storage; (c) improper use; (d) failure to follow the product instructions or to perform any preventive maintenance; (e) modifications; (f) unauthorized repair; (g) normal wear and tear; or (h) external causes such as accidents, abuse, or other actions or events beyond our reasonable control.

WHAT IS THE PERIOD OF COVERAGE? This limited warranty starts on the date of your purchase and lasts for one year (the **"Warranty Period"**). The Warranty Period is not extended if we repair or replace the product. We may change the availability of this limited warranty at our discretion, but any changes will not be retroactive.

WHAT ARE YOUR REMEDIES UNDER THIS WARRANTY? With respect to any defective product during the Warranty Period, we will, at our sole discretion, either: (a) repair or replace such product (or the defective part) free of charge or (b) refund the purchase price of such product if an exchange unit cannot be provided.

HOW DO YOU OBTAIN WARRANTY SERVICE? To obtain warranty service, you must contact us at 1-866-849-3049 or by email at info@myivation.com during the Warranty Period to obtain a Defective Merchandise Authorization (**"DMA"**) number. No warranty service will be provided without a DMA number and return shipping costs to our facilities shall be assumed by you, the purchaser. Shipping costs of the replacement unit to you shall be assumed by us.

GET IN TOUCH!

info@myivation.com

1-866-849-3049

IVATION is a trademark of C&A IP Holdings, LLC, in the U.S, Canada, and the E.U.

All other products, brand names, company names, and logos are trademarks of their respective owners, used merely to identify their respective products, and are not meant to connote any sponsorship, endorsement or approval.

Distributed by C&A Marketing, Inc., 114 Tived Lane East, Edison, NJ 08837

MADE IN CHINA

© 2020. C&A IP Holdings, LLC. All Rights Reserved.