

Refrigerator

[en] User manual

KI181..

Table of contents

Safety 4
General information 4
Intended use 4
Restriction on user group 4
Safe transport 5
Safe installation 5
Safe use 6
Damaged appliance 8

Preventing material damage 10

Environmental protection and saving energy 10
Disposing of packaging 10
Saving energy 10

Installation and connection 11
Scope of delivery 11
Installing and connecting the appliance 11
Criteria for the installation location 12
Preparing the appliance for the first time 12
Connecting the appliance to the electricity supply 12

Familiarising yourself with your appliance 14
Appliance 14
Controls 15

Features 15
Shelf 16
Variable shelf 16
Extendable shelf 16
Fruit and vegetable container 16
Fruit and vegetable container with humidity control 16
Butter and cheese compartment ... 17
Door racks 17
Accessories 17

Basic operation 17
Switching on the appliance 17
Operating tips 18
Switching off the appliance 18
Setting the temperature 18

Additional functions 18
Super cooling 18

Alarm 18
Door alarm 18

Refrigerator compartment 18
Tips for storing food in the refrigerator compartment 19
Chill zones in the refrigerator compartment 19
"OK" sticker 19

Defrosting 19
Defrosting in the refrigerator compartment 19

Cleaning and servicing 20
Preparing the appliance for cleaning 20
Cleaning the appliance 20
Cleaning the condensation channel and drainage hole 21
Removing the fittings 21

Troubleshooting 23
Malfunctions 23
Information on display panel 24
Temperature problem 24
Noise 24
Odours 25
Conducting an appliance self-test 26

Storage and disposal 26
Switching off the appliance 26
Disposing of old appliance 26

Customer Service..... 27
Product number (E-Nr.) and production number (FD)..... 27

Technical data 27

Safety

Please read the safety information to ensure that you use the appliance safely.

General information

You can find general information about this instruction manual here.

- Read this instruction manual carefully. Only this will ensure you use the appliance safely and efficiently.
- This manual is intended for the user of the appliance.
- Follow the safety instructions and warnings.
- Keep the instruction manual and the product information safe for future reference or for the next owner.
- Check the appliance after unpacking it. Do not connect the appliance if it has been damaged in transit.

Intended use

Read the information on intended use to ensure that you use the appliance correctly and safely.
This appliance is only intended to be fully fitted in a kitchen.
Only use this appliance:

- As specified in this instruction manual.
- For chilling food.
- In private households and in enclosed spaces in a domestic environment.
- Up to an altitude of max. 2000 m above sea level.

Restriction on user group

Avoid risks to children and vulnerable persons.
This appliance may be used by children aged 8 or over and by people who have reduced physical, sensory or mental abilities or inadequate experience and/or knowledge, provided that they are supervised or have been instructed on how to use the appliance safely and have understood the resulting dangers.
Children must not play with the appliance.

Cleaning and user maintenance must not be performed by children unless they are being supervised.
Keep children under the age of 8 years away from the appliance and power cable.
Children above the age of three years old and younger than eight years old may load and unload the the fridge-freezer.

Safe transport

Follow these safety instructions when transporting the appliance.

⚠ WARNING – Risk of injury!
The high weight of the appliance may result in injury when lifted.
- ▶ Do not lift the appliance on your own.

Safe installation

Follow these safety instructions when installing the appliance.

⚠ WARNING – Risk of electric shock!
- Improper installation is dangerous.
  - ▶ Connect and operate the appliance only in accordance with the specifications on the rating plate.
  - ▶ Connect the appliance to a power supply with alternating current only via a properly installed socket with earthing.
  - ▶ The protective conductor system of the domestic electrical installation must be properly installed.
  - ▶ Never equip the appliance with an external switching device, e.g. a timer or remote control.
  - ▶ When the appliance is installed, the mains plug of the power cord must be freely accessible. If free access is not possible, an all-pole isolating switch must be installed in the permanent electrical installation according to the installation regulations.
  - ▶ When installing the appliance, check that the power cable is not trapped or damaged.

- If the insulation of the power cord is damaged, this is dangerous.
  - ▶ Never let the power cord come into contact with heat sources.
  - ▶ Never let the power cord come into contact with sharp points or edges.
  - ▶ Never kink, crush or modify the power cord.

⚠ WARNING – Risk of fire!

- It is dangerous to use an extended power cord and non-approved adapters.
  - ▶ Do not use extension cables or multiple socket strips.
  - ▶ If the power cord is too short, contact Customer Service.
  - ▶ Only use adapters approved by the manufacturer.
- Portable multiple socket strips or portable power supply units may overheat and cause a fire.
  - ▶ Do not place portable multiple socket strips or power supply units on the back of the appliance.

Safe use

Follow these safety instructions when using the appliance.

⚠ WARNING – Risk of electric shock!

An ingress of moisture can cause an electric shock.

- ▶ Only use the appliance in enclosed spaces.
- ▶ Never expose the appliance to intense heat or humidity.
- ▶ Do not use steam- or high-pressure cleaners to clean the appliance.

⚠ WARNING – Risk of suffocation!

- Children may put packaging material over their heads or wrap themselves up in it and suffocate.
  - ▶ Keep packaging material away from children.
  - ▶ Do not let children play with packaging material.
- Children may breathe in or swallow small parts, causing them to suffocate.
  - ▶ Keep small parts away from children.

- ▶ Do not let children play with small parts.

⚠ WARNING – Risk of explosion!

- Mechanical devices or other devices may damage the refrigeration circuit; flammable refrigerant may escape and explode.
  - ▶ To accelerate the defrosting process, do not use any other mechanical devices or devices other than those recommended by the manufacturer.
- Products which contain flammable propellants and explosive substances may explode, e.g. spray cans.
  - ▶ Do not store products which contain flammable propellants (e.g. spray cans) or explosive substances in the appliance.

⚠ WARNING – Risk of fire!

Electrical devices within the appliance may cause a fire, e.g. heaters or electric ice makers.

- ▶ Do not operate electrical devices within the appliance.

⚠ WARNING – Risk of injury!

Injury to the eyes caused by escaping flammable refrigerant and hazardous gases.

- ▶ Do not damage the tubes of the refrigerant circuit or the insulation.

⚠ CAUTION – Risk of harm to health!

To prevent food from being contaminated, you must observe the following instructions.

- ▶ If the door is open for an extended period of time, this may lead to a considerable temperature increase in the compartments of the appliance.
- ▶ Regularly clean the surfaces that may come into contact with food and accessible drain systems.
- ▶ Store raw meat and fish in suitable containers in the refrigerator so that they do not touch or drip on other food.
- ▶ If the fridge/freezer is empty for an extended period of time, switch off the appliance, defrost it, clean it and leave the door open to prevent the formation of mould.

Damaged appliance

Follow the safety instructions if your appliance is damaged.

⚠ WARNING – Risk of electric shock!

- If the appliance or the power cord is damaged, this is dangerous.
  - ▶ Never operate a damaged appliance.
  - ▶ Never operate an appliance with a cracked or fractured surface.
  - ▶ Never pull on the power cord to unplug the appliance. Always unplug the appliance at the mains.
  - ▶ If the appliance or the power cord is damaged, immediately unplug the power cord or switch off the fuse in the fuse box.
  - ▶ Call Customer Service. → *Page 27*
  - ▶ Repairs to the appliance should only be carried out by trained specialist staff.
- Improper repairs are dangerous.
  - ▶ Repairs to the appliance should only be carried out by trained specialist staff.
  - ▶ Only use genuine spare parts when repairing the appliance.
  - ▶ If the power cord of this appliance is damaged, it must be replaced by the manufacturer, the manufacturer's Customer Service or a similarly qualified person in order to prevent any risk.

⚠ WARNING – Risk of fire!



If the tubes are damaged, flammable refrigerant and harmful gases may escape and ignite.

- ▶ Keep naked flames and ignition sources away from the appliance.
- ▶ Ventilate the room.
- ▶ Switch off the appliance. → *Page 18*
- ▶ Unplug the appliance from the mains or switch off the circuit breaker in the fuse box.

▶ Call after-sales service. → *Page 27*

Preventing material damage

Follow these instructions to prevent material damage to your appliance, accessories or other objects in your kitchen.

ATTENTION!

- Contamination with oil or fat may cause plastic parts and door seals to become porous.
  - ▸ Keep plastic parts and door seals free of oil and grease.
- Using the base, runners or appliance doors as a seat surface or climbing surface may damage the appliance.
  - ▸ Do not stand or support yourself on the base, runners or doors.

Environmental protection and saving energy

Help protect the environment by using your appliance in a way that conserves resources and by disposing of reusable materials properly.

Disposing of packaging

The packaging materials are environmentally compatible and can be recycled.

- ▸ Sort the individual components by type and dispose of them separately.

  Information about current disposal methods are available from your specialist dealer or local authority.

Saving energy

If you follow these instructions, your appliance will use less power.

Selecting the installation location

Follow these instructions when installing your appliance.

- Keep the appliance out of direct sunlight.
- Install the appliance as far away as possible from heating elements, cookers and other heat sources:
  - – Maintain a 30 mm clearance to electric or gas cookers.
  - – Maintain a 30 cm clearance to oil or solid-fuel cookers.

+ The appliance needs to cool less frequently at low ambient temperatures.

- Use a niche depth of 560 mm.
- Do not cover or block ventilation openings.
- Ventilate the room daily.

+ The air on the back wall of the appliance can escape more easily and the appliance does not warm up so intensely.
  The appliance must cool less frequently.

Saving energy during use

Follow these instructions when using your appliance.

Note: The arrangement of the fittings does not affect the energy consumption of the appliance.

- Do not cover or block ventilation openings.

+ The air on the back wall of the appliance can escape more easily and the appliance does not warm up so intensely.

- Open the appliance door only briefly.
- Transport purchased food in a cool bag and place in the appliance quickly.
- Allow warm food and drinks to cool down before placing them in the appliance.
- Thaw frozen food in the refrigerator compartment to utilise the low temperature of the food.

+ The air in the appliance does not warm up so intensely.
The appliance must cool less frequently.

- Always leave some space between the food and to the back panel.
- Pack the food airtight.

+ The air can circulate and the air humidity remains constant.

Installation and connection

You can find out where and how best to install your appliance here. You will also learn how to connect your appliance to the power supply.

Scope of delivery

After unpacking all parts, check for any transport damage and check the completeness of the delivery.
If you have any complaints, contact your dealer or our after-sales service → *Page 27*.

The delivery consists of the following:
- Built-in appliance
- Equipment and accessories[1]
- Installation material
- Installation instructions
- Operating instructions
- Customer service booklet
- Warranty enclosure[2]
- Energy label
- Product data sheet
- Information on the energy consumption and noises

Installing and connecting the appliance

Requirement: The scope of delivery of the appliance is checked.
→ *Page 11*

1. Observe the criteria for the appliance's installation location.
→ *Page 12*
2. Install the appliance according to the enclosed installation instructions.

[1] Depending on the appliance specifications

[2] Not in all countries

3. Prepare the appliance for first use. → *Page 12*
4. Electrically connect the appliance. → *Page 12*

Criteria for the installation location

Follow these instructions when installing your appliance.

⚠ WARNING
Risk of explosion!
If the appliance is in a space that is too small, a leak in the refrigeration circuit may result in a flammable mixture of gas and air.
- Only install the appliance in a space with a volume of at least 1 m^3 per 8 g refrigerant. The volume of refrigerant is indicated on the rating plate. → *"Appliance", Fig.* **1**/6, *Page 15*

The weight of the appliance ex works may be up to 70 kg depending on the model.
The subfloor must be of sufficient stability to bear the weight of the appliance.

Permitted room temperature

The permitted room temperature depends on the appliance's climate class.
The climate class can be found on the rating plate. → *"Appliance", Fig.* **1**/6, *Page 15*

Climate class	Permitted room temperature
SN	10 °C to 32 °C
N	16 °C to 32 °C
ST	16 °C to 38 °C
T	16 °C to 43 °C

The appliance is fully functional within the permitted room temperature.
If an appliance with climate class SN is operated at colder room temperatures, the appliance will not be damaged up to a room temperature of 5 °C.

Niche dimensions

Observe the niche dimensions if you install your appliance in the furniture recess. If this is not the case, problems may occur when installing the appliance.

Niche depth

Install the appliance in the recommended niche depth of 560 mm.
If the niche depth is smaller, the energy consumption increases slightly.
The niche depth must be a minimum 550 mm.

Niche width

An inside niche width of at least 560 mm is required for the appliance.

Preparing the appliance for the first time

1. Remove the informative material.
2. Remove the protective foil and transit bolts, e.g. remove the adhesive strips and carton.
3. Clean the appliance for the first time. → *Page 20*

Connecting the appliance to the electricity supply

1. Insert the mains plug of the appliance's power cable in a socket nearby.

   The connection data of the appliance can be found on the rating plate. → *"Appliance", Fig.* **1**/6, *Page 15*

2. Check the mains plug is inserted properly.
✔ The appliance is now ready for use.

Familiarising yourself with your appliance

Familiarise yourself with the parts of your appliance.

Appliance

You can find an overview of the parts of your appliance here.

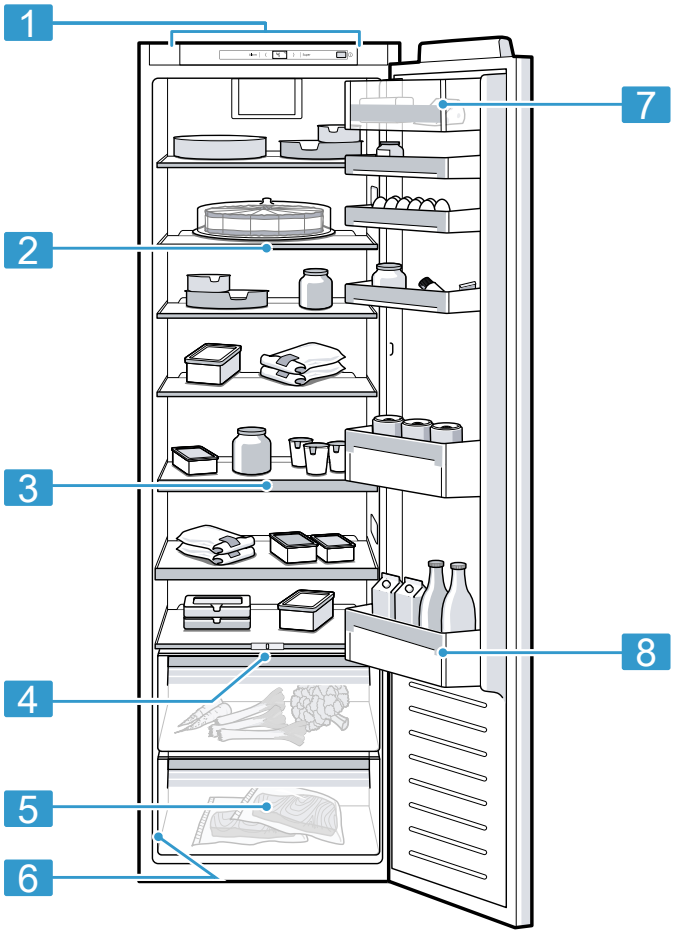

1

1	Controls
2	Variable shelf → *Page 16*
3	Extendable shelf → *Page 16*
4	Fruit and vegetable container with humidity control → *Page 16*

5	Fruit and vegetable container → *Page 16*
6	Rating plate
7	Butter and cheese compartment → *Page 17*
8	Door storage compartment for large bottles

Note: Deviations between your appliance and the diagrams may differ with regard to their features and size.

Controls

The controls are used to configure all functions of your appliance and to obtain information about the operating status.

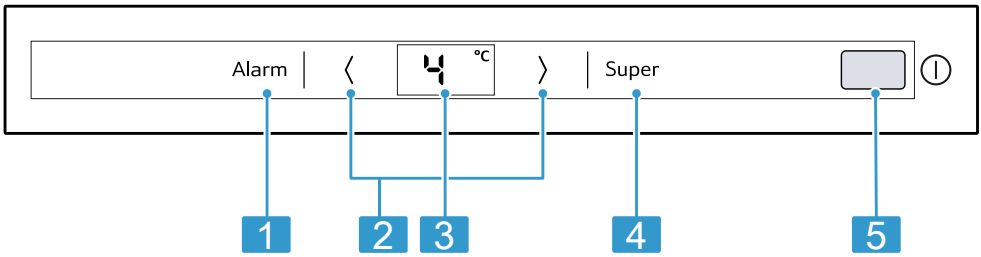

2

1	**Alarm** switches the warning signal off.
2	〈/〉 sets the temperature of the refrigerator compartment.
3	Displays the set temperature for the refrigerator compartment in °C.
4	**Super** switches Super cooling on or off.
5	⏻ switches the appliance on or off.

Features

Here you can see an overview of the features of your appliance and their use.
The features of your appliance depend on the model.

Shelf

To vary the shelves as required, remove the shelf and re-insert it elsewhere.
→ *"Removing the shelf", Page 21*

Variable shelf

Use the variable shelf to the store tall items, e.g. cans or bottles, on the shelf below.
You can remove the front section of the variable shelf and slide it below the rear part of the shelf.

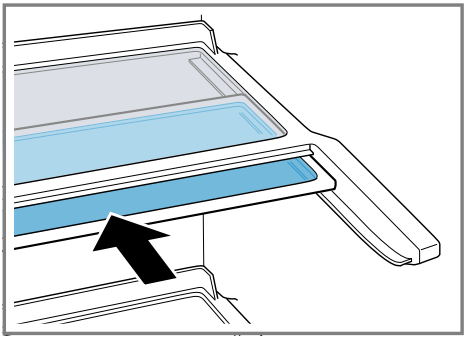

Extendable shelf

In order to achieve an improved overview and to remove food more quickly, remove the shelf.

Fruit and vegetable container

Store fresh fruit and vegetables in the fruit and vegetable container.
Condensation may form in the fruit and vegetable container depending on the food and quantity stored. Remove the condensation with a dry cloth.
To ensure that the quality and aroma are retained, store fruit and vegetables that are sensitive to cold outside of the appliance at temperatures of approx. 8 °C to 12 °C.

Fruit that is sensitive to cold	■ Pineapples ■ Bananas ■ Mangoes ■ Papayas ■ Citrus fruits
Vegetables that are sensitive to cold	■ Aubergines ■ Gherkins ■ Courgettes ■ Peppers ■ Tomatoes ■ Potatoes

Fruit and vegetable container with humidity control

Store fresh fruit and vegetables in the fruit and vegetable container.
You can adjust the humidity in the fruit and vegetable container via the humidity controller and a special seal. This allows fresh fruit and vegetables to be stored for twice as long as with conventional storage.

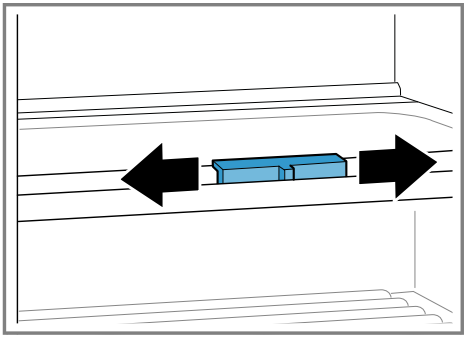

The air humidity in the fruit and vegetable container can be set according to the type and amount of food to be stored:
- Low humidity required when primarily storing fruit or if the appliance is very full.
- Higher humidity required when primarily storing vegetables as well as when the appliance is filled with mixed items or is not very full.

Condensation may form in the fruit and vegetable container depending on the food and quantity stored. Remove the condensation with a dry cloth and adjust the air humidity in the vegetable container using the humidity controller.
To ensure that the quality and aroma are retained, store fruit and vegetables that are sensitive to cold outside of the appliance at temperatures of approx. 8 °C to 12 °C.

Fruit that is sensitive to cold	■ Pineapples ■ Bananas ■ Mangoes ■ Papayas ■ Citrus fruits
Vegetables that are sensitive to cold	■ Aubergines ■ Gherkins ■ Courgettes ■ Peppers ■ Tomatoes ■ Potatoes

Butter and cheese compartment

Store butter and hard cheese in the butter and cheese compartment.
To open the butter and cheese compartment, press down lightly on the centre of the flap.

Note: The compartment opens downwards. The flap slides under the compartment.

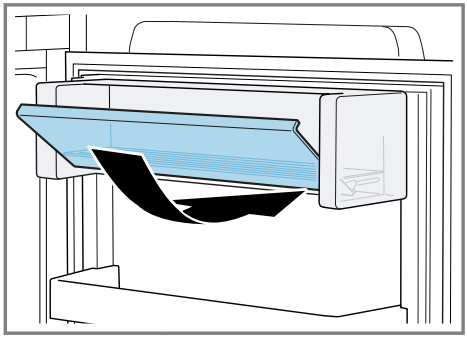

Door racks

To adjust the door racks as required, remove the door rack and re-insert elsewhere.
→ *"Removing door racks", Page 21*

Accessories

Only use original accessories. These have been made especially for your appliance. Here you can find an overview of your appliance's accessories and how to use them.
The accessories for your appliance depend on the model.

Egg tray

Store eggs safely on the egg tray.

Bottle holder

The bottle holder prevents bottles from falling over when the appliance door is opened and closed.

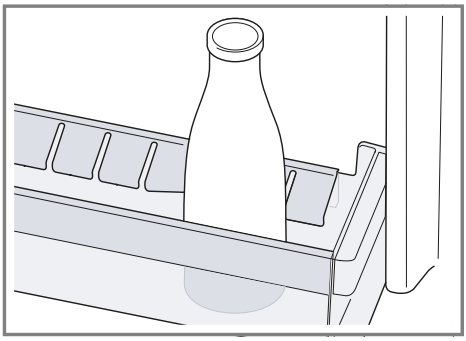

Basic operation

You can find out everything you need to know about operating your appliance here.

Switching on the appliance

1. Press ⏻.

✔ The appliance begins to cool.

2. Set the required temperature.
→ *Page 18*

Operating tips

- Once you have switched on the appliance, the set temperature is only reached after several hours. Do not put in any food in the appliance until the temperature is reached.

Switching off the appliance

- ▸ Press ⏻.
- ✔ The appliance stops cooling.

Setting the temperature

After you have switched on the appliance, you can set the temperature.

Setting the refrigerator compartment temperature

- ▸ Press 〈/〉 repeatedly until the temperature display shows the required temperature.

  The recommended temperature in the refrigerator compartment is 4 °C.
  → *""OK" sticker", Page 19*

Additional functions

Find out which additional functions which can be used for your appliance.

Super cooling

Super cooling cools the refrigerator compartment to make it as cold as possible. This cools food and drinks quickly through.
Switch on Super cooling before placing large quantities of food in the freezer compartment.

Note: When Super cooling is switched on, increased noise may occur.

Switching on Super cooling

- ▸ Press Super.
- ✔ Super lights up.

Note: After approx. 15 hours, the appliance switches to normal operation.

Switching off Super cooling

- ▸ Press Super.
- ✔ The previously set temperature is displayed.

Alarm

Your appliance is equipped with alarm functions.

Door alarm

If the appliance door is open for a longer period, the door alarm switches on.

Switching off the warning signal (door alarm)

- ▸ Close the appliance door or press Alarm.
- ✔ The warning tone is switched off.

Refrigerator compartment

You can keep meat, sausage, fish, dairy products, eggs, ready meals and pastries in the refrigerator compartment.
You can set the temperature in the refrigerator compartment from 2 °C to 8 °C.
The recommended temperature in the refrigerator compartment is 4 °C.
→ *""OK" sticker", Page 19*

The refrigerator compartment can also be used to store highly perishable foods in the short to medium term. The lower the selected temperature, the longer the food remains fresh.

Tips for storing food in the refrigerator compartment

Follow the tips if you store food in your refrigerator compartment.

- To ensure that the freshness and quality of the food is retained for longer, only store fresh and unspoiled food.
- In the case of ready-made products and bottled goods, do not exceed the best-before date or use-by date specified by the manufacturer.
- To retain aroma, colour and freshness or to prevent taste transfer and discolouration of the plastic parts, store food well wrapped or covered.
- Leave warm food and beverages to cool down before placing them in the refrigerator compartment.

Chill zones in the refrigerator compartment

The air circulation in the refrigerator compartment creates different chill zones.

Coldest zone

The coldest zone is between the arrow stamped on the side and the shelf underneath.

Tip: Store perishable food (e.g. fish, sausage, meat) in the coldest zone.

Warmest zone

The warmest zone is at the very top of the door and in the lower vegetable container.

Tip: Store food that does not spoil easily in the warmest zone, e.g. hard cheese and butter. Cheese can then continue to release its aroma and the butter will still be easy to spread.

"OK" sticker

The "OK" sticker lets you check whether the refrigerator compartment reaches the safe temperature ranges of +4 °C or colder recommended for food.
The "OK" sticker is not included with all models.
If the sticker does not indicate "OK", gradually reduce the temperature.
→ *"Setting the refrigerator compartment temperature", Page 18*
Once the appliance is switched on, it may take up to 12 hours until the set temperature is reached.



Correct setting

Defrosting

Observe the information when you want to defrost your appliance.

Defrosting in the refrigerator compartment

When the appliance is operating, condensation droplets or frost form on the rear panel of the refrigerator compartment due to functional reasons. The back panel in the refrigerator compartment defrosts automatically.
Condensation or frost run through the condensation channel into the drainage hole to the evaporation pan and do not have to be wiped away.

To ensure that the condensation can drain and odours do not form, observe the following information:
→ *"Cleaning the condensation channel and drainage hole", Page 21*.

Cleaning and servicing

To keep your appliance working efficiently for a long time, it is important to clean and maintain it carefully. Customer Service must clean inaccessible points. Cleaning by customer service can give rise to costs.

Preparing the appliance for cleaning

Find out how to prepare your appliance for cleaning.

1. Switch off the appliance.
   → *Page 18*
2. Disconnect the appliance from the power supply.

   Unplug the appliance from the mains or switch off the circuit breaker in the fuse box.
3. Take out all of the food and store it in a cool location.

   Place ice packs (if available) onto the food.
4. If there is a layer of hoarfrost, allow this to defrost.
5. Remove all fittings from the appliance. → *Page 21*

Cleaning the appliance

Clean the appliance as specified to ensure that it is not damaged by incorrect cleaning or unsuitable cleaning products.

⚠ WARNING
Risk of electric shock!
- An ingress of moisture can cause an electric shock.
  - ▸ Do not use steam- or high-pressure cleaners to clean the appliance.
- Liquid in the lighting can be dangerous.
  - ▸ The rinsing water must not run into the light.

ATTENTION!
- Unsuitable cleaning products may damage the surfaces of the appliance.
  - ▸ Do not use hard scouring pads or cleaning sponges.
  - ▸ Do not use harsh or abrasive detergents.
  - ▸ Do not use cleaning products with a high alcohol content.
- If you clean fittings and accessories in the dishwasher, this may cause them to become deformed or discolour.
  - ▸ Never clean shelves or containers in the dishwasher.

1. Prepare the appliance for cleaning.
   → *Page 20*
2. Clean the appliance, the fittings and the door seals clean with a dish cloth, lukewarm water and a little pH-neutral washing-up liquid.
3. Dry thoroughly with a soft, dry cloth.
4. Insert the fittings.
5. Electrically connect the appliance.
6. Switch on the appliance.
   → *Page 17*

7. Putting the food into the appliance.

Cleaning the condensation channel and drainage hole

Regularly clean the condensation channel and drainage hole to ensure that the condensation can drain.

- Carefully clean the condensation channel and the drainage hole, e.g. using a moistened cotton bud.

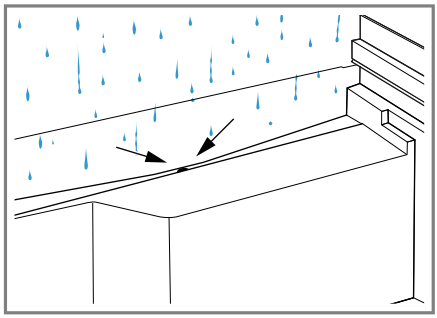

Removing the fittings

If you want to clean the fittings thoroughly, remove these from your appliance.

Removing the shelf

- Pull out and remove the shelf.

Removing the extendable shelf

1. Pull out the extendable shelf until the locking catch is released.

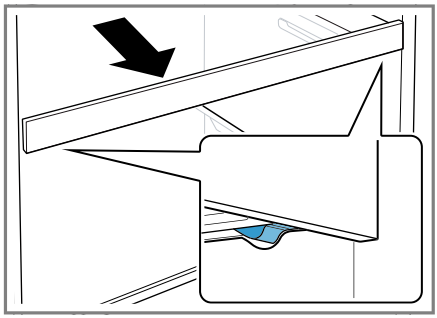

2. Lower the shelf and swing it out to the side.

Removing door racks

- Lift the door rack upwards and remove it.

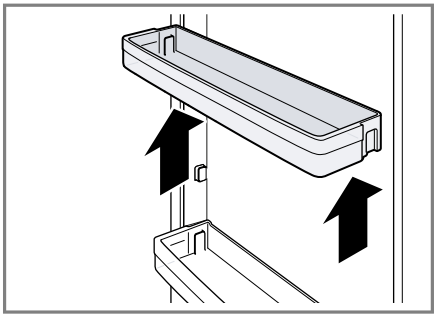

Removing the fruit and vegetable container

1. Pull the container out all the way.
2. Press the latch on the pull-out rail ① downwards and remove the container ②.

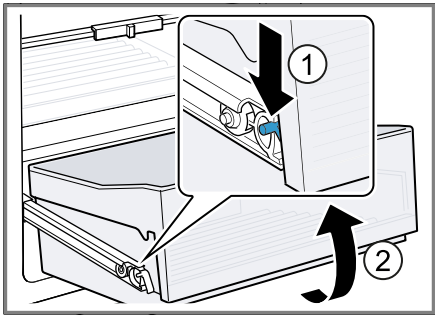

Removing the shelf above the vegetable container

1. Pull out the fruit and vegetable container.
2. Remove the shelf ① and rotate ②.

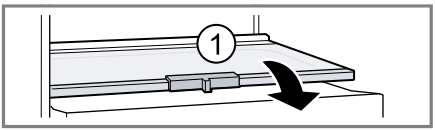

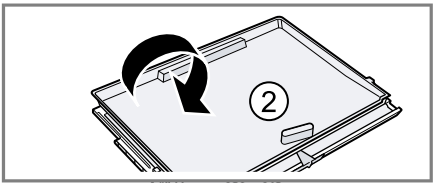

3. Press the fastenings for the lower glass plate outwards.

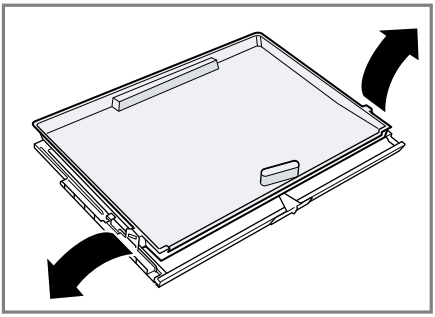

4. Lift the glass plate at the front ① and pull it out at the rear ②.

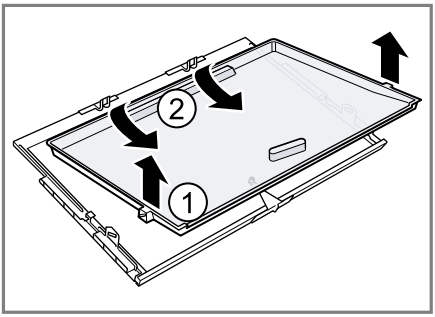

Troubleshooting

You can rectify minor faults on your appliance yourself. Read the troubleshooting information before contacting after-sales service. This will avoid unnecessary costs.

⚠ WARNING
Risk of electric shock!
Improper repairs are dangerous.
- ▸ Repairs to the appliance should only be carried out by trained specialist staff.
- ▸ Only use genuine spare parts when repairing the appliance.
- ▸ If the power cord of this appliance is damaged, it must be replaced by the manufacturer, the manufacturer's Customer Service or a similarly qualified person in order to prevent any risk.

Malfunctions

Fault	Cause	troubleshooting
The appliance is not working. No displays light up.	The mains plug has not been inserted properly.	▸ Connect the mains plug.
	Fuse has been tripped.	▸ Check the fuses.
	The power has failed.	1. Check whether the power is on. 2. Place ice packs (if available) on the top shelf.
The appliance is not cooling, the displays and lighting light up.	Showroom mode is switched on.	▸ Carry out the appliance self-test. → *Page 26* ✔ Once the appliance self-test has ended, the appliance switches to normal operation.
The LED lighting does not work. Do not remove the lamp cover.	Different causes are possible.	▸ Call the after-sales service. → *"Customer Service", Page 27*
The refrigeration unit is switching on more frequently and for longer.	The appliance door was opened frequently.	▸ Do not open appliance door unnecessarily.
	The ventilation openings are covered up.	▸ Remove any obstructions from in front of the ventilation openings.
The base of the refrigerator compartment is wet.	The condensation channel or drainage hole are blocked.	▸ Clean the condensation channel and the drainage hole. → *Page 21*

Information on display panel

Fault	Cause	troubleshooting
Message showing "D" or "E" appears in the display.	The electronics have detected a fault.	▶ Call the after-sales service. → *"Customer Service", Page 27*
A warning signal sounds and Alarm lights up.	Different causes are possible.	▶ Press Alarm. ✔ The alarm is switched off.
	The appliance door is open.	▶ Close the appliance door.

Temperature problem

Fault	Cause	troubleshooting
The temperature differs greatly from the setting.	Different causes are possible.	1. Switch off the appliance. → *Page 18* 2. Switch the appliance back on after five minutes. → *Page 17* – If the temperature is too warm, check the temperature again after a couple of hours. – If the temperature is too cold, check the temperature again on the following day.

Noise

Fault	Cause	troubleshooting
Appliance has a humming sound.	Not a fault. A motor is running, e.g. refrigerating unit, fan.	No action required.
The appliance bubbles, buzzes or gargles.	Not a fault. Refrigerant flows through the pipes.	No action required.
The appliance clicks.	Not a fault. Motor, switches or solenoid valves are switching on or off.	No action required.
The appliance makes noises.	The appliance is not level.	▶ Align the appliance using a spirit level. If required, place something underneath it.
	Fittings wobble or stick.	▶ Check the removable fittings and, if required, replace these.
	Bottles or containers are touching.	▶ Move the bottles or containers away from each other.

Odours

Fault	Cause	troubleshooting
The appliance has an unpleasant smell.	Different causes are possible.	1. Prepare the appliance for cleaning. → *Page 20* 2. Clean the appliance. → *Page 20* 3. Clean all food packaging. 4. To prevent odours from forming, store strong smelling food in airtight containers. 5. After 24 hours, check whether odours are still forming.

Conducting an appliance self-test

1. Switch off the appliance. → *Page 18*
2. Switch the appliance back on after approx. five minutes. → *Page 17*
3. Within the first 10 seconds after switching on, press and hold Super 3 to 5 seconds.

✔ The appliance self-test starts.
✔ While the appliance self-test is running, a long audible signal sounds.
✔ If, at the end of the appliance self-test, two audible signals sound and the temperature display indicates the set temperature, your appliance is OK. The appliance then switches to normal operation.
✔ If, at the end of the appliance self-test, five audible signals sound and Super flashes for 10 seconds, inform the after-sales service.

Storage and disposal

You can find out here how to prepare your appliance for storage. You will also find out how to dispose of old appliances.

Switching off the appliance

1. Switch off the appliance. → *Page 18*
2. Disconnect the appliance from the power supply.

   Unplug the appliance from the mains or switch off the circuit breaker in the fuse box.
3. Defrost the appliance. → *Page 19*
4. Clean the appliance. → *Page 20*
5. Leave the appliance door open.

Disposing of old appliance

Valuable raw materials can be re-used by recycling.

⚠ WARNING
Risk of harm to health!
Children can lock themselves in the appliance, thereby putting their lives at risk.
- ▸ Leave shelves and containers inside the appliance to prevent children from climbing in.
- ▸ Keep children away from the redundant appliance.

⚠ WARNING
Risk of fire!
If the tubes are damaged, flammable refrigerant and harmful gases may escape and ignite.
- ▸ Do not damage the tubes of the refrigerant circuit or the insulation.

1. Unplug the appliance from the mains.
2. Cut through the power cord.
3. Dispose of the appliance in an environmentally friendly manner.



This appliance is labelled in accordance with European Directive 2012/19/EU concerning used electrical and electronic appliances (waste electrical and electronic equipment - WEEE). The guideline determines the framework for the return and recycling of used appliances as applicable throughout the EU.

Customer Service

If you have any queries, are unable to rectify faults on the appliance yourself or if your appliance needs to be repaired, contact Customer Service. You can solve many problems yourself by consulting the information on eliminating faults in this instruction manual or on our website. If this is not the case, contact our Customer Service.
We will always find an appropriate solution and try to avoid unnecessary visits being made by a Customer Service technician.
With any warranty claims we will make sure that your appliance is repaired by trained Customer Service technicians using original spare parts, including after the manufacturer's warranty has expired.
For safety reasons repairs to the appliance should only be carried out by trained specialist staff. The warranty claim becomes void if repairs or interventions have been carried out by persons not authorised by us for that purpose or if our appliances have been fitted with spare, supplementary or accessory parts that were not genuine parts and then resulted in a defect.
Function-relevant genuine spare parts according to the corresponding Ecodesign Order can be obtained from Customer Service for a period of at least 10 years from the date on which your appliance was placed on the market within the European Economic Area.

Note: Under the terms of the manufacturer's warranty applicable to the location the use of Customer Service is free of charge. The minimum duration of the warranty (manufacturer's warranty for private consumers) in the European Economic Area is 2 years (except for Denmark and Sweden, where it is 1 year) according to the terms of warranty applicable to the location. The terms of warranty do not affect other rights or claims held by yourself under local legislation.

Detailed information on the warranty period and terms of warranty in your country is available from our Customer Service, your retailer or on our website.
If you contact Customer Service, you will require the product number (E-Nr.) and the production number (FD) of your appliance.
The contact details for Customer Service can be found in the enclosed Customer Service directory or on our website.

Product number (E-Nr.) and production number (FD)

You can find the product number (E-Nr.) and the production number (FD) on the appliance's rating plate.
→ *"Appliance", Fig.* **1**/6, *Page 15*
Make a note of your appliance's details and the Customer Service telephone number to find them again quickly.

Technical data

Refrigerant, cubic capacity and further technical specifications can be found on the rating plate.
→ *"Appliance", Fig.* **1**/6, *Page 15*

More information about your model can be found online at https://energylabel.bsh-group.com[1]. This web address is linked to the official EU EPREL product database. At the time of printing its web address had not yet been published. Please then follow the instructions on searching for models. The model identifier is made up of the characters before the slash in the product number (E-Nr.) on the rating plate. Alternatively you can also find the model identifier in the first line of the EU energy label.

[1] Only applies to countries in the European Economic Area



REGISTER YOUR PRODUCT
ONLINE NEFF-HOME.COM

Constructa-Neff Vertriebs-GmbH
Carl-Wery-Straße 34
81739 München
GERMANY

9001483040
en
000218