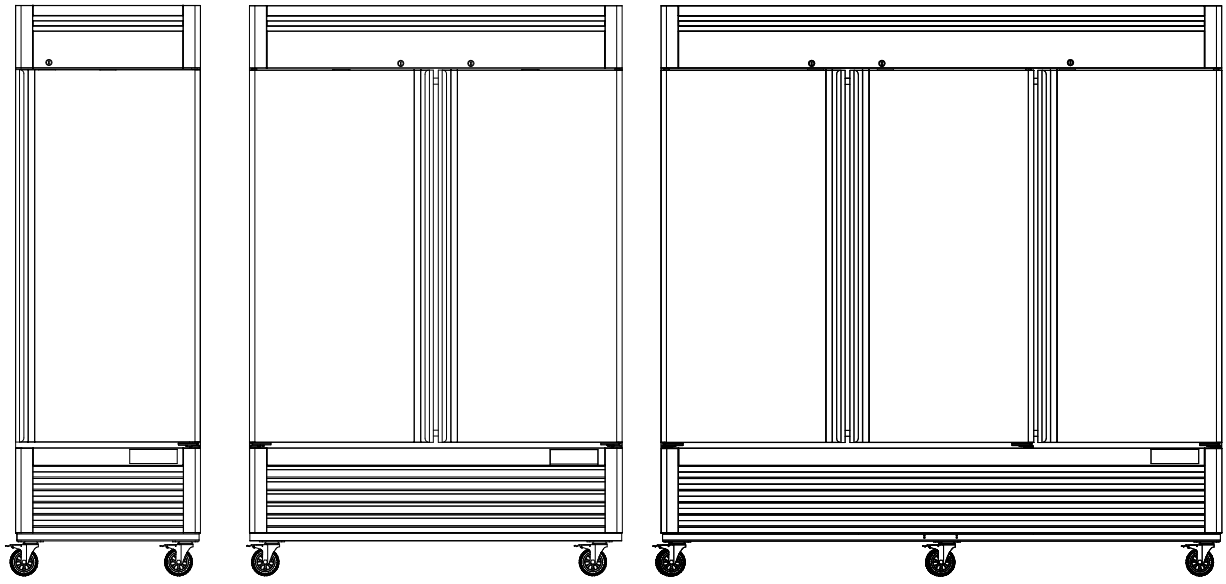

USER MANUAL

READ THIS INSTRUCTION MANUAL COMPLETELY
BEFORE USING THIS PRODUCT

TABLE OF CONTENTS

INTRODUCTION 1

Features 3

Specifications 3

Details of Product 5

SAFETY PRECAUTIONS 5

Refrigerant Safety 5

Electric Safety 6

Basic Safety & Warning 6

INSTALLATION 7

Guides to Choose Location 7

Electrical Safety 8

Electronic Diagram 8

OPERATION 11

Before Use 12

Temperature Adjustment 13

Drain Tray 13

Placing Items in the Showcase 13

MAINTENANCE & CLEANING 14

Cleaning 14

Maintenance 15

TROUBLE SHOOTING 16

WARRANTY 16

WELCOME

Thank you for purchasing this Coolski product. We are very proud of our products and are completely committed to providing you with the best products and services possible. Your satisfaction is our top priority.
To use our product correctly, please read the following installation carefully before attempting to install or use your product. If you have any questions, Please contact our Technical Service Department at:

service@cool-ski.com

INTRODUCTION

These reach-in refrigerators are a must for any commercial kitchen, restaurant, hotel, and hospitality industry. Designed for back of the house use, the reach-in refrigerator is the workhorse you rely on to keep your ingredients at safe temperatures before being transformed into the final product your customers love.

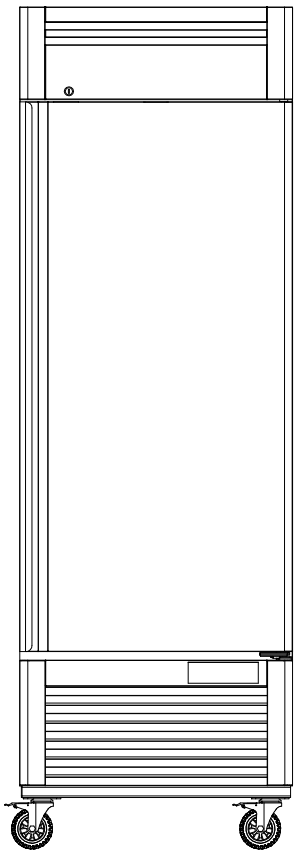

This unit is a high-quality stainless steel fridge that is made with a stainless steel interior and exterior bound to stand the test of time. Its digital temperature control and monitoring system help to keep food products safe by maintaining constant temperatures. The door has a positive self-sealing close to provide a tight seal. With 23 cubic feet of space and 4 adjustable shelves, this fridge is capable of storing a plethora of kitchen essentials. Safe interior lighting provides additional lighting throughout the cabinet.

These reach-in refrigerators are a must for any commercial kitchen, restaurant, hotel, and hospitality industry. Designed for back of the house use, the reach-in refrigerator is the workhorse you rely on to keep your ingredients at safe temperatures before being transformed into the final product your customers love.

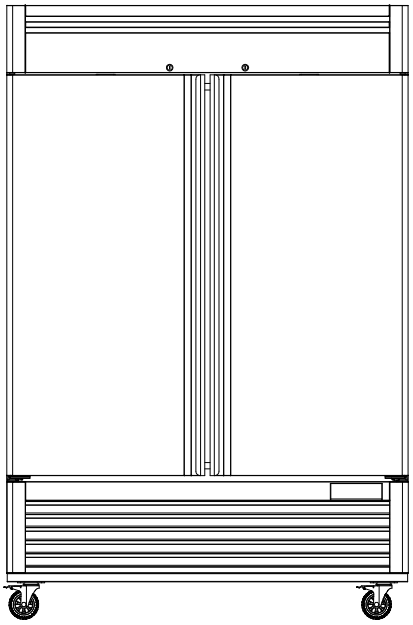

This unit is a high-quality stainless steel fridge that is made with a stainless steel interior and exterior bound to stand the test of time. Its digital temperature control and monitoring system help to keep food products safe by maintaining constant temperatures. The door has a positive self-sealing close to provide a tight seal. With 49 cubic feet of space and 8 adjustable shelves, this fridge is capable of storing a plethora of kitchen essentials. Safe interior lighting provides additional lighting throughout the cabinet.

These reach-in refrigerators are a must for any commercial kitchen, restaurant, hotel, and hospitality industry. Designed for back of the house use, the reach-in refrigerator is the workhorse you rely on to keep your ingredients at safe temperatures before being transformed into the final product your customers love.

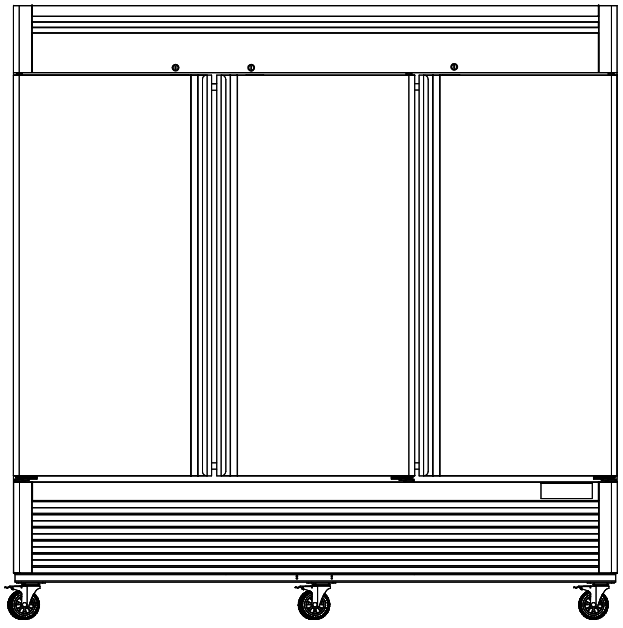

This unit is a high-quality stainless steel fridge that is made with a stainless steel interior and exterior bound to stand the test of time. Its digital temperature control and monitoring system help to keep food products safe by maintaining constant temperatures. The door has a positive self-sealing close to provide a tight seal. With 83 cubic feet of space and 12 adjustable shelves, this fridge is capable of storing a plethora of kitchen essentials. Safe interior lighting provides additional lighting throughout the cabinet.

Features

- R290 Environmental Refrigerant
- Sturdy 4, 8 or12 Adjustable Shelves
- Energy-efficient Interior LED Light
- Digital Temperature Controls
- Holds 33 °F to 41 °F or -8 °F to 0 °F
- Digital controller
- Stainless Steel Exterior and Interior
- Self-closing Doors
- Standard with 4 casters (two with brakes)
- Magnetic Door Gasket

Specifications

Product Name	Commercial Refrigerator
Capacity (L/Cuft)	547/19.32
Width	27 inch
Depth	31.5 inch
Height (including casters)	83.25 inch
Adjustable Shelves	4
Shelf Dimensions(W x D)	24.6x21.7 inch
Shipping Weight	296.52 lb
Shipping L x W x H	29.72x33.86x86.18 inch

Model	MR-23
Voltage	115/60HZ
Electrical Connection (NEMA)	
Cooling System	Air Cooling
Ambient Temp.	33℃/100.4℉,53%
Amp.	1.5A
Inner Temperature	33-41℉
Energy Consumption (kWh/day)	0.75
Refrigerant	R290

Product Name	Commercial Freezer
Capacity (L/Cuft)	547/19.32
Width	27 inch
Depth	31.5 inch
Height (including casters)	83.25 inch
Adjustable Shelves	4
Shelf Dimensions(W x D)	24.6x21.7 inch
Shipping Weight	296.52 lb
Shipping L x W x H	29.72x33.86x86.18 inch

Model	MF-23
Voltage	115/60HZ
Electrical Connection (NEMA)	
Cooling System	Air Cooling
Ambient Temp.	33℃/100.4℉,53%
Amp.	2.6A
Inner Temperature	-3- 5℉
Energy Consumption (kWh/day)	4.38
Refrigerant	R290

Product Name	Commercial Refrigerator
Capacity (L/Cuft)	1231/43.5
Width	54 inch
Depth	31.5 inch
Height (including casters)	83.25 inch
Adjustable Shelves	8
Shelf Dimensions(W x D)	24.6x24.4 inch
Shipping Weight	448.64 lb
Shipping L x W x H	56.30x33.78x86.22 inch

Model	MR-49
Voltage	115/60HZ
Electrical Connection (NEMA)	
Cooling System	Air Cooling
Ambient Temp.	33℃/100.4℉,53%
Amp.	1.5A
Inner Temperature	33-41℉
Energy Consumption (kWh/day)	1.5
Refrigerant	R290

Product Name	Commercial Freezer
Capacity (L/Cuft)	1231/43.5
Width	54 inch
Depth	31.5 inch
Height (including casters)	83.25 inch
Adjustable Shelves	8
Shelf Dimensions(W x D)	24.6x24.4 inch
Shipping Weight	448.64 lb
Shipping L x W x H	56.30x33.78x86.22 inch

Model	MF-49
Voltage	115/60HZ
Electrical Connection (NEMA)	
Cooling System	Air Cooling
Ambient Temp.	33℃/100.4℉,53%
Amp.	5.2A
Inner Temperature	-3- 5℉
Energy Consumption (kWh/day)	8.76
Refrigerant	R290

Product Name	Commercial Refrigerator
Capacity (L/Cuft)	1934/68.3
Width	81 inch
Depth	31.5 inch
Height (including casters)	83.25 inch
Adjustable Shelves	12
Shelf Dimensions(W x D)	24.6x24.4&24.6 x27.2 inch
Shipping Weight	609.58 lb
Shipping L x W x H	84.25x33.86x86.50 inch

Model	MR-83
Voltage	115/60HZ
Electrical Connection (NEMA)	
Cooling System	Air Cooling
Ambient Temp.	33℃/100.4℉,53%
Amp.	3.2A
Inner Temperature	33-41℉
Energy Consumption (kWh/day)	1.6
Refrigerant	R290

Product Name	Commercial Freezer
Capacity (L/Cuft)	1934/68.3
Width	81 inch
Depth	31.5 inch
Height (including casters)	83.25 inch
Adjustable Shelves	12
Shelf Dimensions(W x D)	24.6x24.4&24.6 x27.2 inch
Shipping Weight	609.58 lb
Shipping L x W x H	84.25x33.86x86.50 inch

Model	MF-83
Voltage	115/60HZ
Electrical Connection (NEMA)	
Cooling System	Air Cooling
Ambient Temp.	33℃/100.4℉,53%
Amp.	7.2A
Inner Temperature	-3- 5℉
Energy Consumption (kWh/day)	12.13
Refrigerant	R290

Details of Product

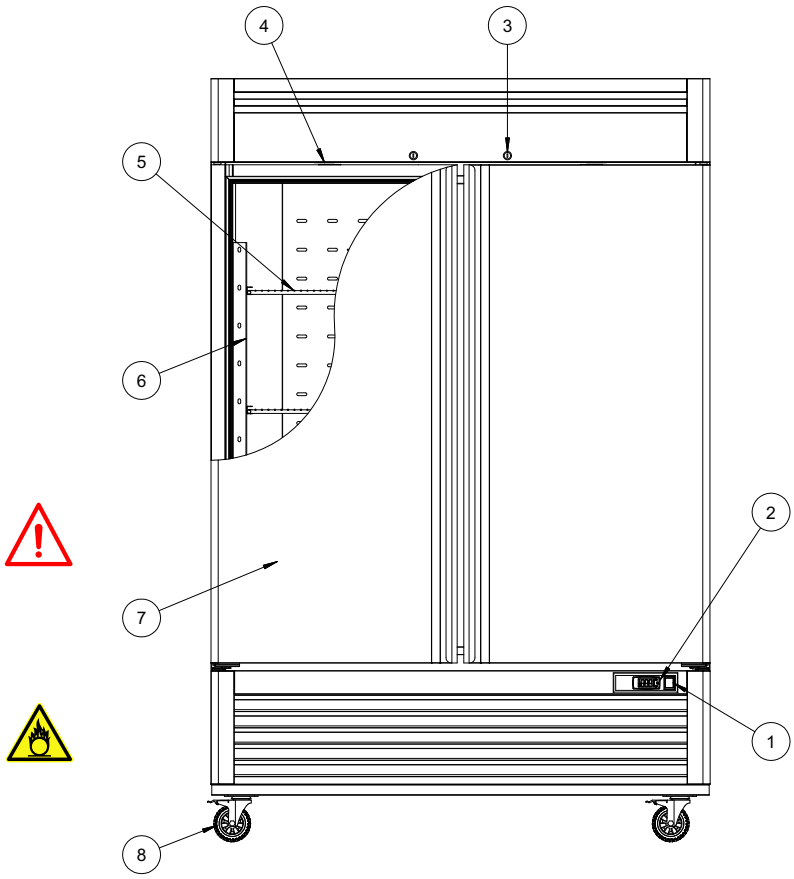

1 Thermostat

2 Power Switch

3 Lock

4 Light & Fan Switch

5 Shelf

6 Pilaster

7 Door

8 Castor

SAFETY PRECAUTIONS

WARNING – Use this appliance for its intended purpose as described in this Installation Manual.

This manual contains the product's basic knowledge, use instruction, fault diagnosis, and basic troubleshooting methods. The purpose of the safety precautions in this manual is to ensure the safe and correct use of the unit to minimize risks that could cause serious damage and injury. In order to better understand and use this product, please take good care of this manual and read it carefully.

Refrigerant Safety

CAUTION! Keep all ventilation openings clear of an obstruction in the appliance enclosure or in the structure housing the appliance.

DANGER! Risk of fire or explosion, Flammable refrigerant used, Do not damage the refrigerant circuit. Do not use mechanical devices or other means to accelerate the defrosting process, other than those recommended by the manufacturer.

DANGER! Risk of fire or explosion, Flammable refrigerant used, consult repair manual/owner's guide before attempting to service this product. All safety precautions must be followed. Dispose of properly in accordance with local and federal regulations. Follow all safety precautions.

CAUTION! Do not store any explosive substance such as aerosol cans with a flammable propellant in this

appliance.

Electric Safety

• Must use an independent special socket and the socket should be grounded.
• The power plug should be connected to the socket tightly.
• When a power wire or plug is broken or worn, do not use it, and must go to the appointed maintenance pot to get fixed or replaced.
• Please do not insert or pull out the plug when there is leakage of natural gas or other flammable gas. Please install a leakage protector to avoid electric shock.
• The appliance shall be disconnected from its power source during cleaning or maintenance and when replacing parts.
• When the cooler will not be used for a long time, disconnect the power and clean it. Please examine the circuit before reuse.
• DO NOT use other electrical appliances inside the food storage compartments of the appliance, unless they are of the type recommended by the manufacturer.
• ATTENTION! As long as the power plug is in the electrical socket the appliance is connected to the electric grid.

Basic Safety & Warning

• Take care during operation, maintenance or repairs to avoid cuts or pinching from any part /component of the cabinet.
• Ensure the unit is properly installed and located in accordance with the Installation Instructions before use.
• This appliance is not intended for use by persons(Including children) with reduced physical, sensory or mental capabilities, or lack of experience and knowledge, unless they have been given supervision or instruction concerning use of the appliance by a person responsible for their safety.
• DO NOT allow children to play with the appliance or climb, stand, or hang on the unit's shelves to prevent damage to the refrigerator and personal injury.
• DO NOT store or use gasoline, or other flammable vapors and liquids, in the vicinity of this or any other appliance.
• DO NOT store explosive substances such as aerosol cans with a flammable propellant in this appliance.
• Strong base, strong acid, organic solvent and corrosive goods or those are easy to pollute to food are prohibited storing in the cooler, otherwise, it can cause corrosive problem or accident.
• The LED light must not be replaced directly by the user! If the light is damaged, please contact the customer service for assistance.
• This appliance can be used by children aged from 8 years and above and persons with reduced physical, sensory or mental capabilities or lack of experience and knowledge if they have been given supervision or instruction concerning use of the appliance in a safe way and understand the hazards involved. Children shall not play with the appliance. Cleaning and user maintenance shall not be made by children without supervision.
• When disposing of the appliance, do so only at an authorized waste disposal centre. Do not expose to flame.
• When positioning the appliance, ensure the supply cord is not trapped or damaged.
• Make sure the power cable does not come in contact with sharp or hot objects and keep away from open fire.

If the supply cord is damaged, it must be replaced by a special cord or assembly available from the

manufacturer or its service agent.
Before you scrap the appliance, please take off the doors to prevent children trapped.

DANGER! RISK OF CHILD ENTRAPMENT
Child entrapment and suffocation are not problems of the past.



The symbol is a warning and indicates the refrigerant and insulation blowing gas are flammable.

Warning - Risk of fire / flammable materials.
Warning - Do not store explosive substance such as aerosol can with a flammable propellant in the unit.
Warning - Do not locate multiple portable socket-outlets or portable power supplies at the rear of the appliance
Warning - The refrigerant and insulation blowing gas are flammable. When disposing of the appliance, do so only at an authorized waste disposal centre. Do not expose to flame.

INSTALLATION



Guides to Choose Location

1. Put on stable ground

—The refrigerator should be placed on flat and stable ground, if the surface is uneven, the unit may be noisy. The unit may malfunction if the surface is uneven.

2. Keep far away from a hot source

—The unit is not exposed to direct sunlight, or is not to be placed near any kind of heat source such as a cooker, oven or radiator. Place the refrigerator in the coolest and best ventilated part of the room.

3. Ventilation condition

—Should be put in the aeration place, there should be at least 3 cm space behind and around the refrigerator.

4.Outside condition

—The unit is for indoor application only. Outdoor use may cause decreased efficiency and a damage to the unit. Do not put the refrigerator in a place where the temperature is too low(below 5 degrees) also do not place it outdoors or in the rain.

Electrical Safety

—Be sure to follow the National Electrical Code, as well as the local codes and ordinances, when installing the receptacle.

—Before your new unit is connected to a power supply, check the incoming voltage. Please refer to the electrical requirements on the unit's nameplate.

—Do not use an extension cord with this appliance. If the power cord is too short, have a qualified electrician or service technician install an outlet near the appliance. Use of an extension cord can negatively affect the performance of the unit.

—Do not, under any circumstances, cut or remove the third ground prong from the power cord supplied.

—Improper use of the grounded plug can result in the risk of electrical shock. If the power cord is damaged, have it replaced by an authorized service center.

—NEVER to unplug your refrigerator by pulling on the power cord. Always grip the plug firmly and pull straight from the outlet.

—Plug the power plug into a grounded and compatible socket.

Electric Diagram

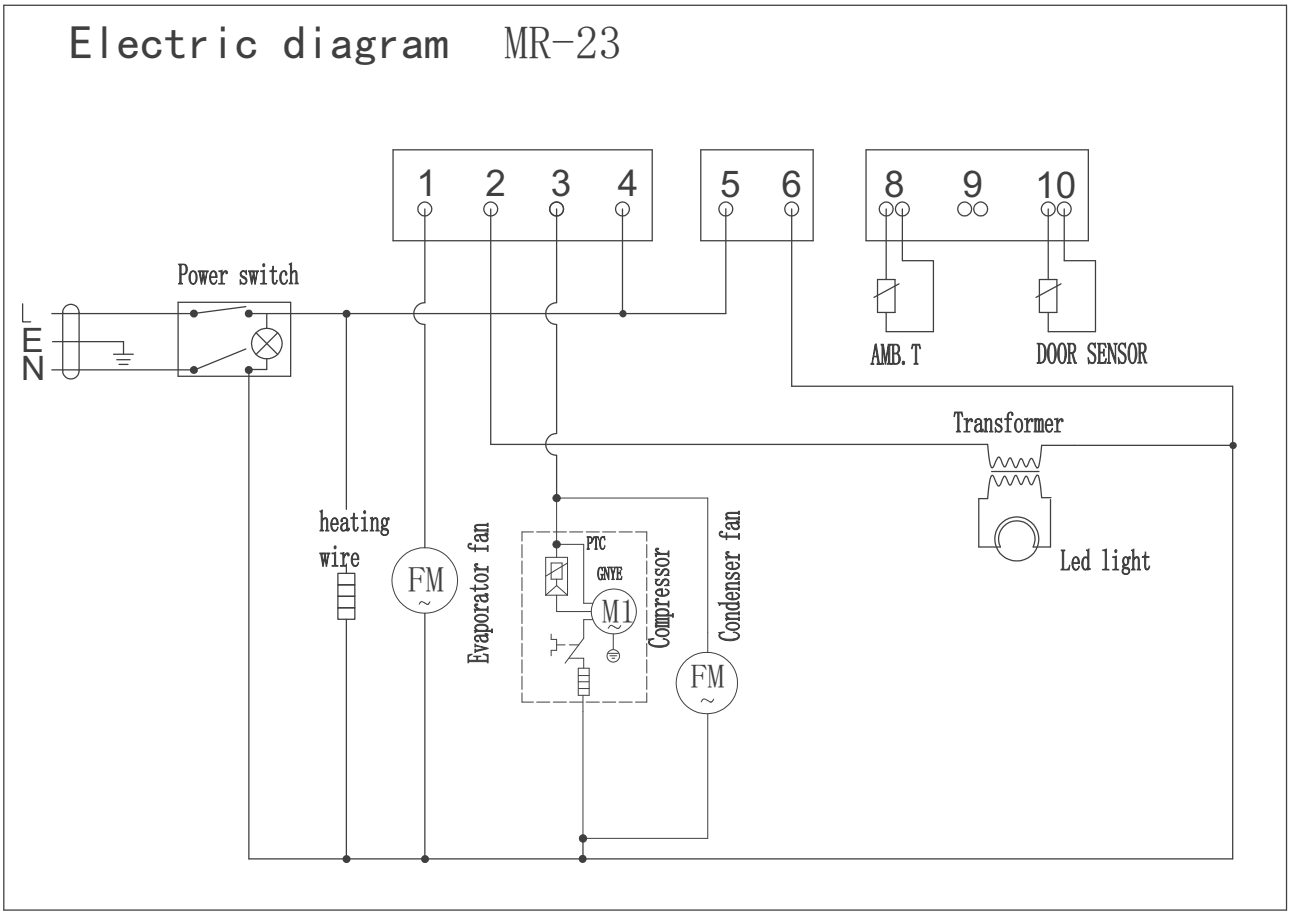

Electric diagram MF-23

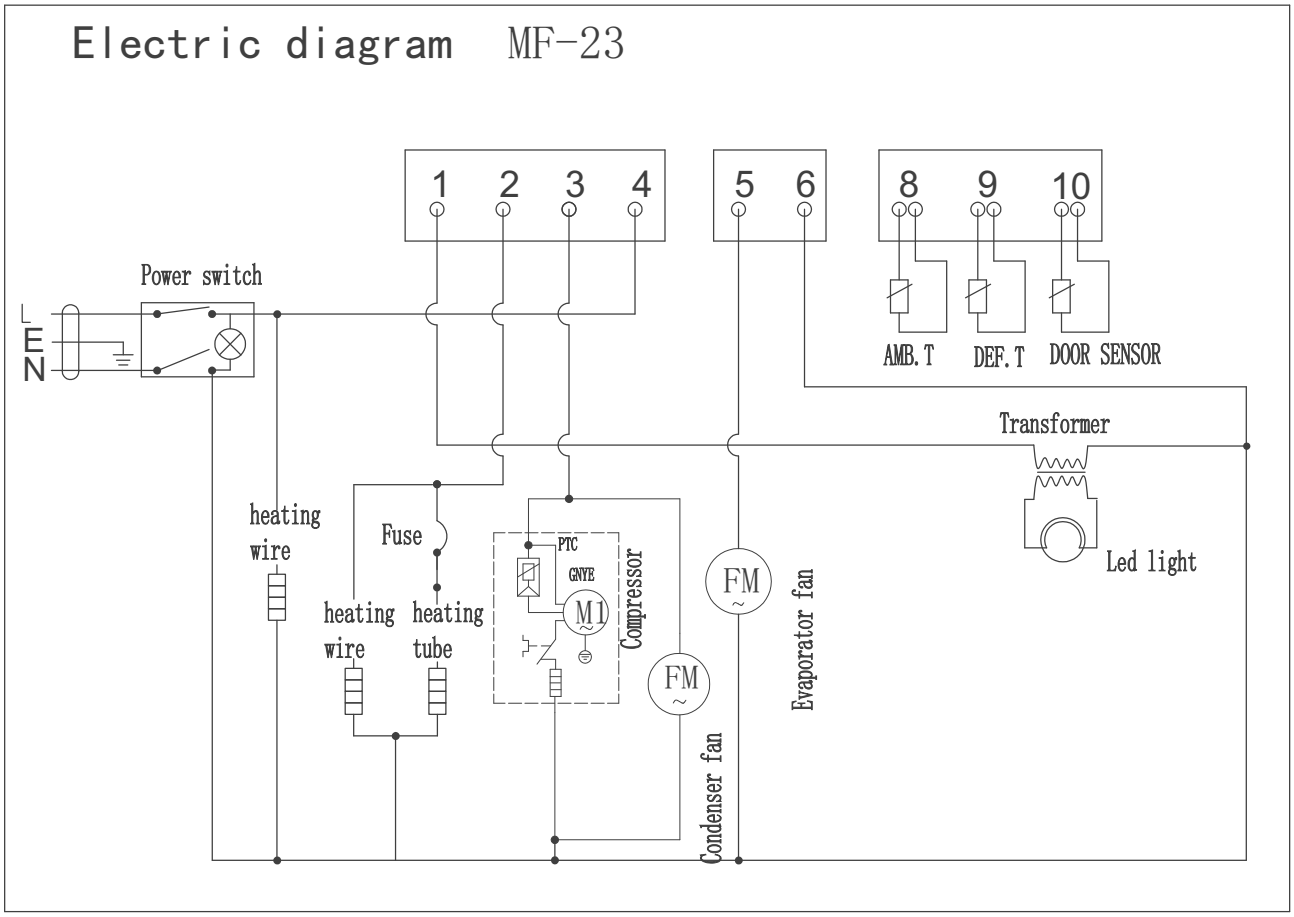

Electric diagram MR-49

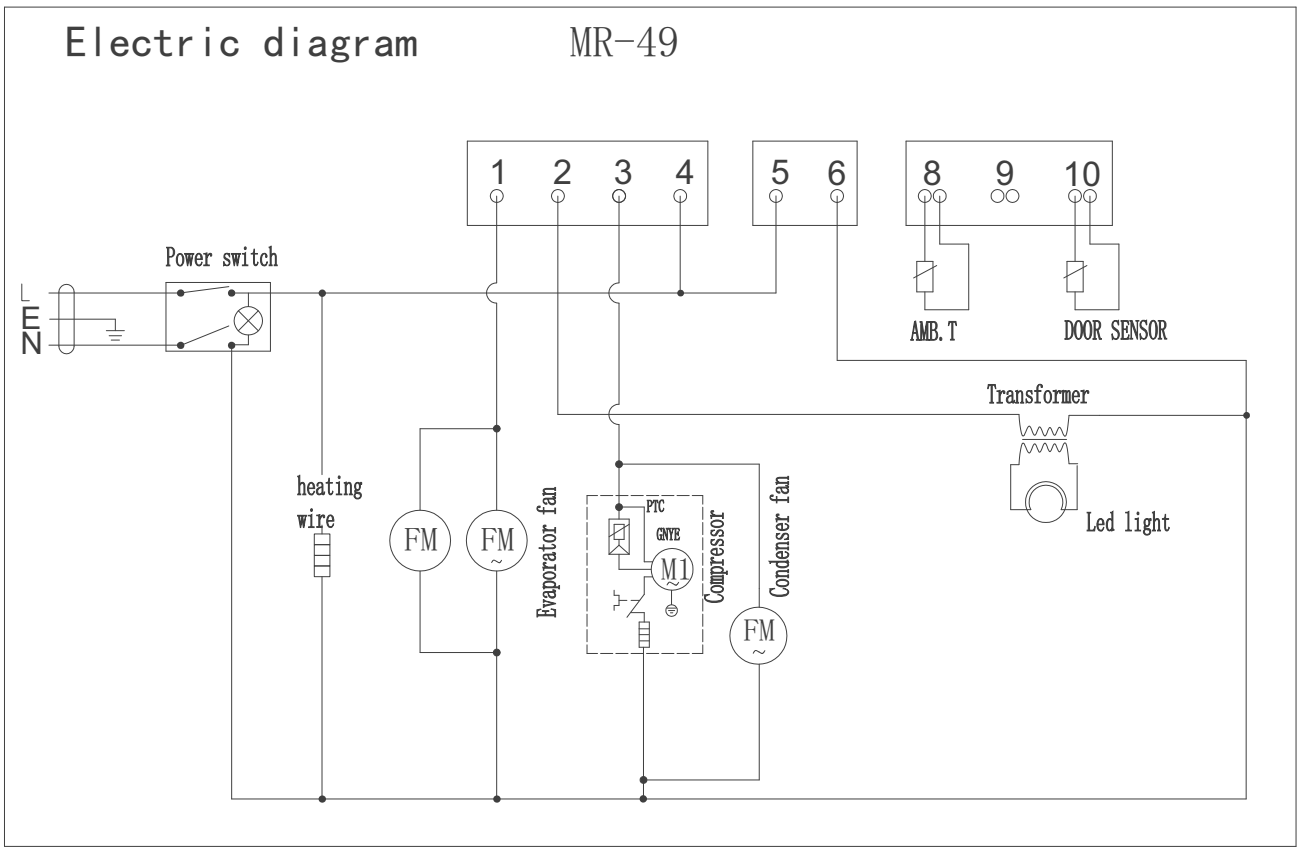

Electric diagram MF-49

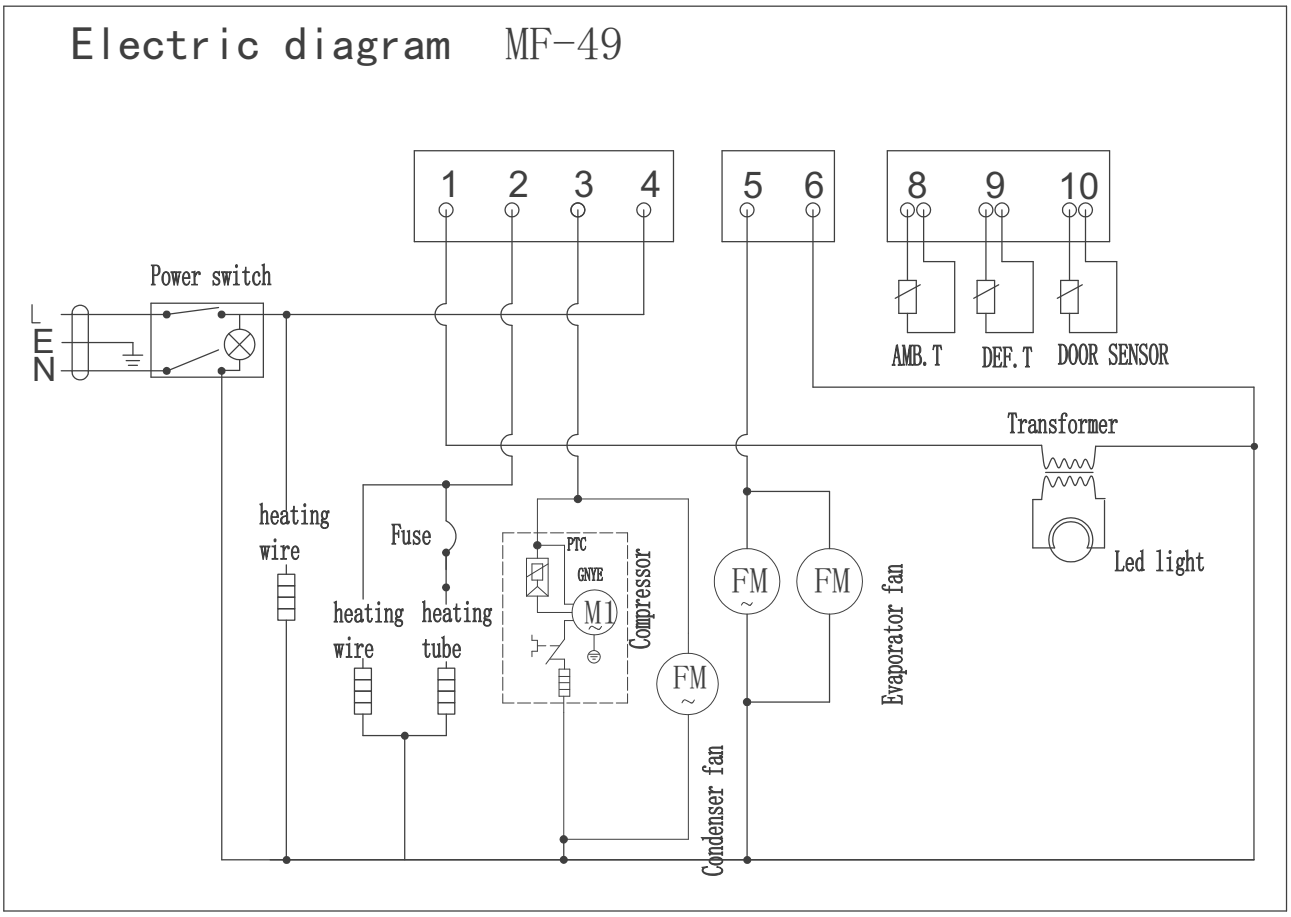

Electric diagram MR-83

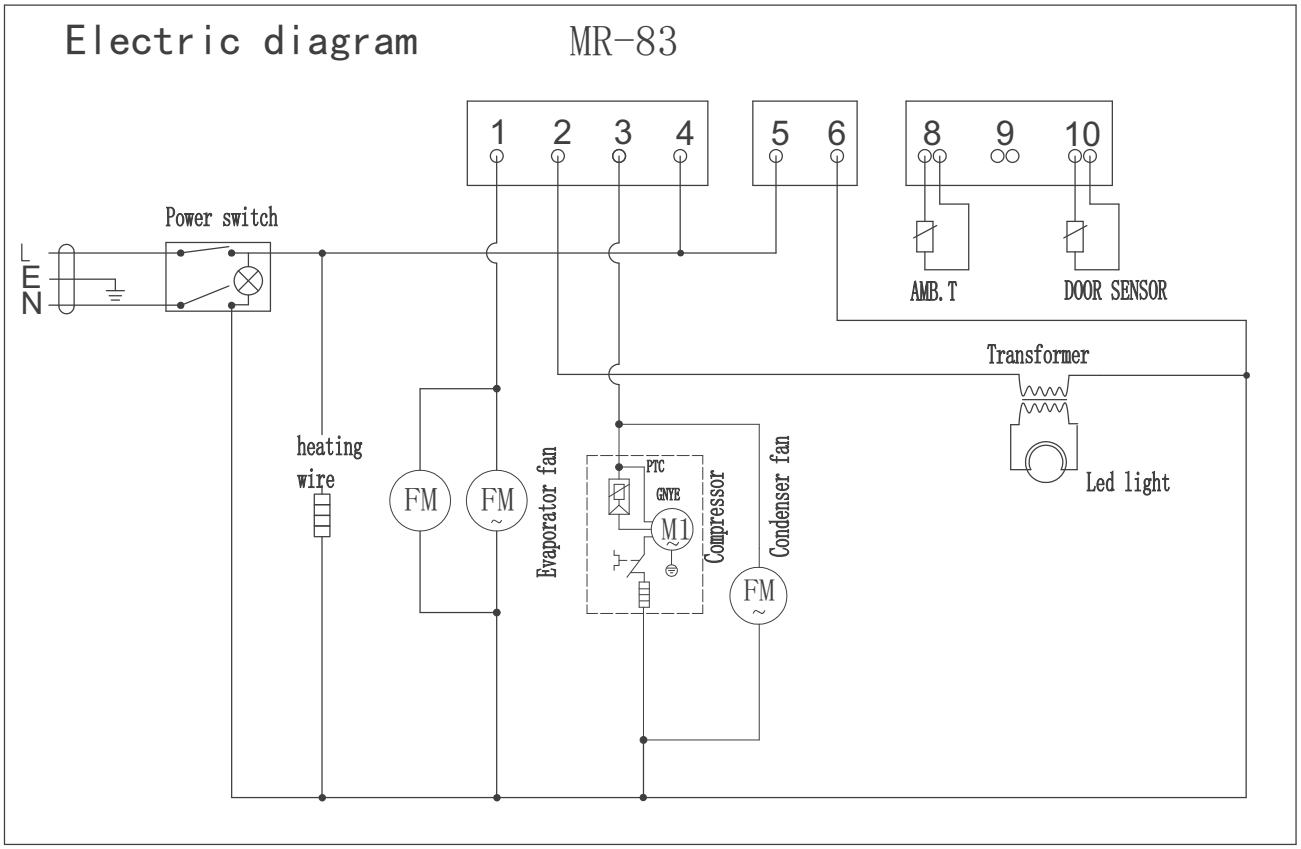

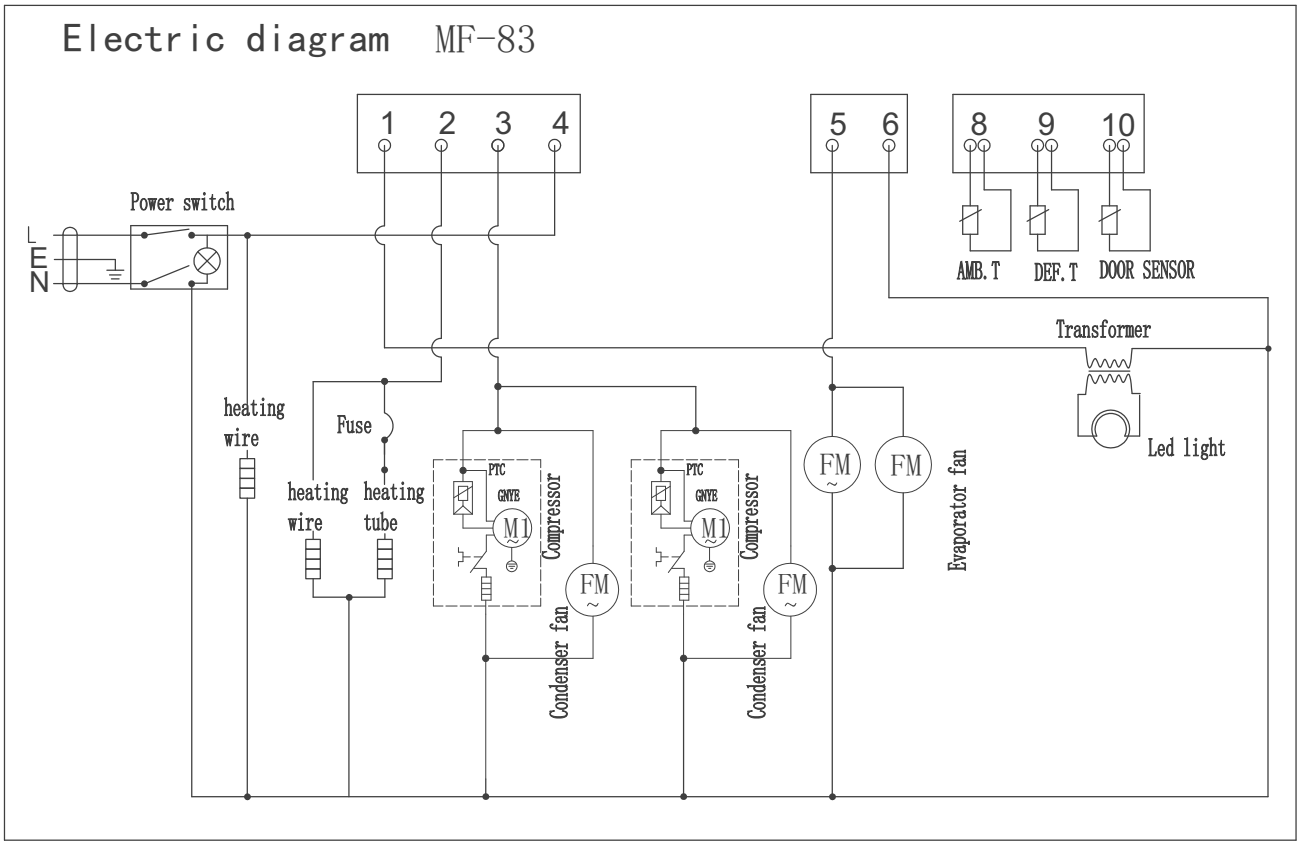

OPERATION

Before Use

1.Remove all the package

—Remove the shipping package, bag, tape, etc, and leave doors open to ventilate for a while.

2.Check the parts and document

—Please check the item in the refrigerator, any problem ask the distributor.
—Ensure all shelves are sitting level and properly secured before loading products.

3.Put the refrigerator in a suitable place

4.Clean the refrigerator before usage and open the door.

—The unit is cleaned before shipment. However, clean the compartment interior using warm water then dry it
—with a soft cloth after delivery.

5.Put aside

—To ensure the refrigerant and oil in the cooling system have precipitated properly, keep the appliance in the upright position for several hours before switching it on. If the appliance was tilted horizontally prior to or during delivery, keep it upright for at least 48 hours before switching it on.

Temperature Adjustment

The electronic controller has been set to the best temperature for cooling beverages and drinks at the lowest temperature of 32-50 Fahrenheit.

Should you want to set the temperature you need, please adopt the following procedure.



Manually forced operation
In the status of temperature measuring and controlling, press for 3 seconds to force the switch between refrigeration, defrost , defrost dripping.

Here are the direct instructions on how to adjust the temperature on the temperature controller:

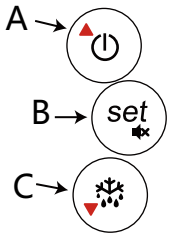

1. Press and hold (B) set for 1s until the temperature value starts to flash.
2. Use(A) and (C) to increase or decrease the value until youreach
3. your desiredtemperature.
   Press (B) set again to confirm the new temperature.

NOTE: This machine has an internal temperature differential that works as a protection for the compressor. The way the differential works is that at whatever temperature the unit will be set at, the compressor will work and cool the cabinet down until it reaches the chosen set point then it will shut itself up. It will allow a differential of 4 degrees before starting its operation back.

The reason is to protect the compressor from doing short cycles (on / off) repetitively. Doing so can burn out the compressor, the same as flickering a light switch very fast, it will burn the light bulb. The compressor works exactly the same so it should be considered when adjusting the set point.

Placing Items in the Showcase

Pay attention to the following points:

—Please do not put more than 100kg/220lbs of food on the rail

—Please store food suit the above temperature range, and there should be enough space, item should not block the air outlet(70% is the upper limit） to make the sure a normal circuit of cold air.

—Place items so that they do not protrude from the shelves. The gap between the shelves and the door is used for the circulation of cold air.

—The hot food should be cooled first and then put into the refrigerator, otherwise will affect other stored food around.

—Place items evenly on all shelves.

—Please put in packed food only

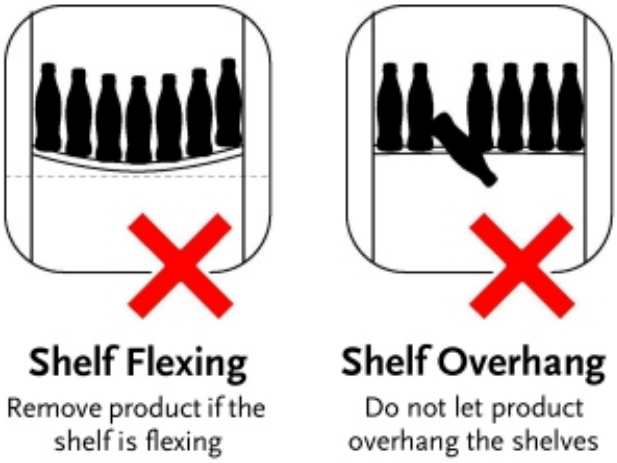

MAINTENANCE & CLEANING

The smooth operation and life of the equipment are mainly determined by correct and regular maintenance. It is much easier to clean on a regular basis than to have to remove stains once they have built up.

Cleaning

WARNING

To prevent any electrical shock hazards or injury by rotating circulation fan, always disconnect the power cord plug from the wall outlet before cleaning.

Cleaning the inside and surface

—Clean the refrigerator with neutral cleaning agent, then dry it with a soft clean cloth.

Do not use abrasive detergents!

NOTE: ATTENTION! Never hose down the appliance or immerse it in water or any other liquid, instead wipe the exterior with a damp cloth. Short-circuit and electrical shock could result.

ATTENTION! Never use aggressive cleaning agents or abrasives. Do not use solvents or petrol based cleaning agents. Some cleaning agents may leave harmful residues or cause damage to the appliance. Use a food safe detergent instead.

ATTENTION! Do not use any scourer and sharp or pointed objects during cleaning, this may cause damage to the appliance.



Clean door gasket

—The door gasket needs to be washed frequently to keep tightness. Simply remove the door gasket from the frame of the door, soak it in warm water and soap for 30 minutes, then dry it with a soft cloth and install it.

NOTE: Check door gaskets for proper seal after they are replaced.

Clean the shelves

—Periodically remove the shelves from the unit, and clean them with mild soap and warm water. Rinse under the tap afterward to remove any soap residues.

NOTE: Always dry the shelves before placing them back inside the chamber.

Clean condenser fins

—Please clean the fin of the condenser every month, if the fin is blocked up, it will affect the refrigeration ability.
—The power should be off when clean, using a brush to clean the dust. Please do not brush horizontally in case damage the fin and affect refrigeration.

Check after clean

—Is the power cord plug firmly inserted into a dedicated wall outlet? Confirm that the plug is not abnormally hot.
—Check the power cord for cracks and damage. Should the slightest irregularity be observed, contact the dealer from whom you purchased this unit or our customer's service.
—Check again the refrigerator to make sure every part is installed correctly and is safe.

Maintenance

Power Failure

- ATTENTION! Never let the power cable or power plug get wet or damp.
- Regularly check the power plug and power cable for damage. If either is damaged do not use the appliance. Instead, have it repaired by a certified electrical engineer.

When not Used for a Long Period

- Remove all items from the compartment and disconnect the power cord plug from the wall outlet. Clean the compartment interior and wipe away all water.
- To prevent mold formation and bad smell, leave the door open to dry the compartment completely.

Transportation

- Disconnect the power cord plug from the wall outlet.
- When moving the cooler, make sure that the feet do not damage the power cord.
- Do not let the feet hit against floor steps, thresholds, etc.

Temporary Storage

- Affix a piece of wood, etc. Between the door and main unit to prevent complete closing of the door. Make sure not to store the unused cooler at a location where children play.
- Should a child enter the compartment and the door is closed, the child may not be able to open the door from the inside.

TROUBLE SHOOTING

Fault	Cause	Resolution
No refrigeration	• Power plug is loosen • Use multi-socket • Power switch button is off • Is defrosting	• Insert plug well • Use special socket • Turn on the button • Wait for the end of defrost
Cooling Slowly	• Too much food, no channel for cold air • Direct sunlight, near a hot source • Too much dust on the condenser • Door open and close too frequently • Temperature controller is not set suitable • Hot food in the cabinet	• Reset the position of the food • Choose another place to place • clean condenser(must turn off the power) • Decrease times of opening and close door • Set the correct temperature • Put the food into the refrigerator after cooling
Big noise	• The ground is not stable and flat • The leg is not set well	• Make ground stable and flat • Adjust the leg

WARRANTY

Coolski is committed to providing customers with premium refrigeration equipment and we provide 12 months of free replacement parts caused by quality problems from the date of purchase. Provide lifetime technical service and troubleshooting support for any question.

The following is not included in the free service:

• Without purchase records. If you want a new replacement, must to provide order number.

• Failed or damaged components resulting from electrical power failure, high or low voltage, use of extension cords, or improper grounding of the unit.

• Component damages caused by failing to provide power and voltage as required in technical data.

• Damages caused by disassembling products, adjust or change the mechanical and electrical structures without permission.

• Failure or other damages resulting from improper usage or installation.

• Failure to clean and / or maintain product as set forth in the warranty packet provided with the unit.

• Non-man-made damage, such as damages from abnormal voltage, fire, building collapse, lightning, floods and other natural disasters, and damages from rats and other pests.

Thank You

CONTACT US

Coolski SERVICE

EMAIL: service@cool-ski.com