Vinotemp®

# BEVERAGE COOLER

# VT58BC

# INSTRUCTION MANUAL

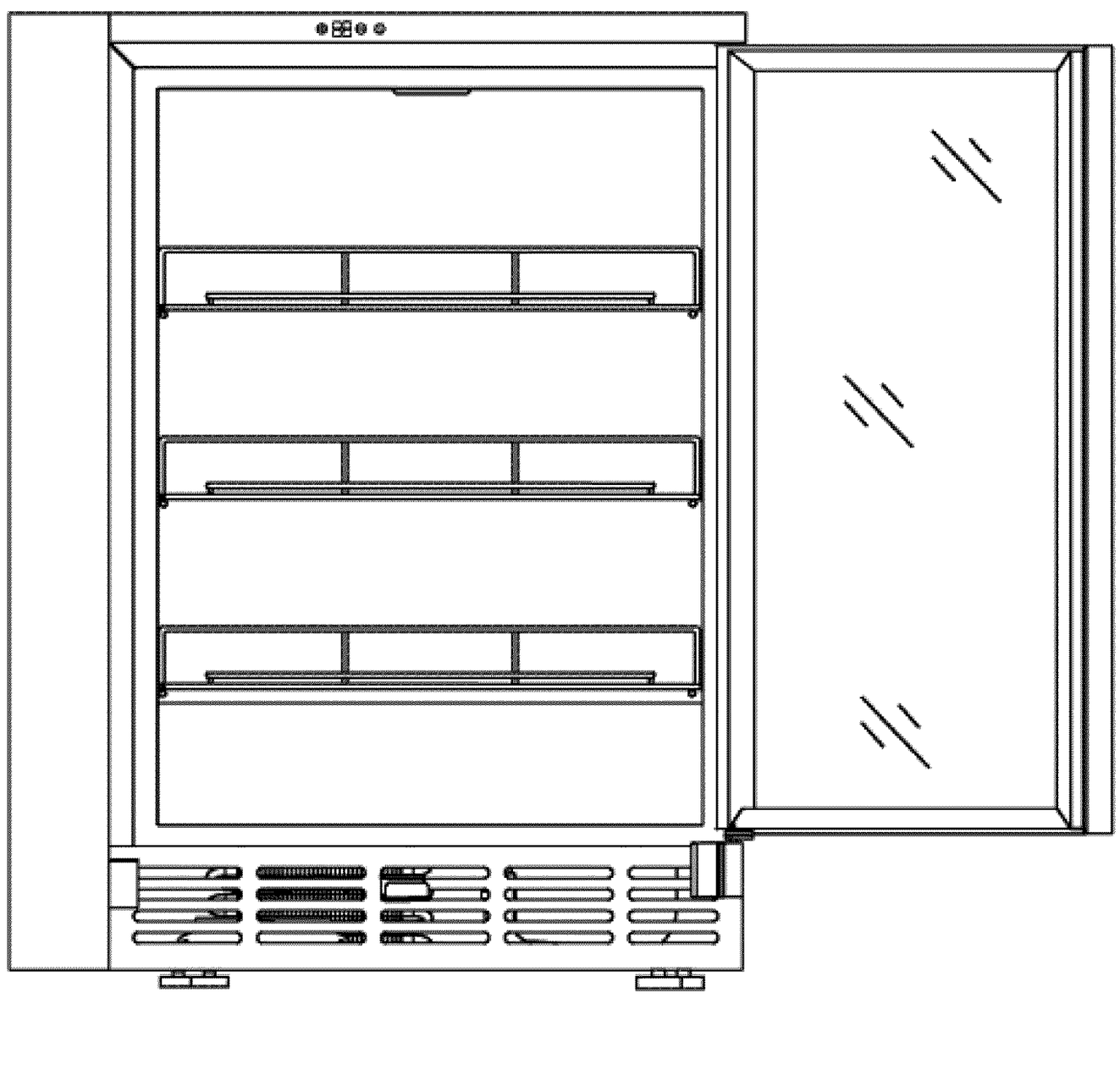

LOS ANGELES CA

# TABLE OF CONTENTS

FEATURES ..... 1

INSTALLATION..... 1

IDENTIFICATION OF PARTS..... 2

REVERSAL OF DOOR SWING..... 3

INSTRUCTION FOR CORRECT AND EFFICIENT USE..... 4

PACKAGING AND TRANSPORTATION..... 5

CAUTIONS FOR OPERATION..... 5

MAINTENANCE AND TROUBLESHOOTING..... 6

LIMITED WARRANTY..... 7

CIRCUIT DIAGRAM..... 11

## FEATURES

- ✧ **ZERO CLEARANCE "BUILT-IN" DESIGN:** Lower front inlet and exhaust grill enables installation in areas including but not limited to kitchen cabinets, kitchen islands and formal display areas. Must leave clearance in front of the unit.
- ✧ **Temperature zones** that provide proper storage climate for beverage. The temperature zones vary from 40°F-65 °F (4°C-18°C), so all your beverage will taste great when you serve them.
- ✧ Simple and reliable temperature adjustment mode to get the ideal temperature for your special blend.
- ✧ An **interior light** will highlight your personal display.
- ✧ **Adjustable legs** ensure proper leveling and proper installation, which will provide reliability of your new COOLER.
- ✧ All units are **CETL** certified to ensure safety compliance and long term durability and service life.
- ✧ Unit is not designed for use in the garage or other extreme environments.

## INSTALLATION

- ✧ Install your COOLER on a solid and level floor (other than carpet). This will ensure a vibration and noise-free operation. Adjust the leveling legs in and out accordingly to stabilize the COOLER horizontally. If the legs are not properly adjusted, the COOLER may be unstable and result in excess noise or vibration.
- ✧ It is not advisable to install the COOLER directly adjacent to a kitchen sink as moisture from this location could cause premature corrosion to the components of your new COOLER.
- ✧ Do not install your new COOLER in direct sunlight or near a range of heat or oven. Such external sources of heat may affect the proper storage temperature and compromise the taste and features of your beverage.
- ✧ Do not install your COOLER in the garage or basement.

**CAUTION: DO NOT USE EXTENSION CORDS!**

**WARNING: RISK OF CHILD ENTRAPMENT.** Before you throw away your old COOLER, take off the door. Leave the shelves in place so that children may not easily climb inside.

## IDENTIFICATION OF PARTS

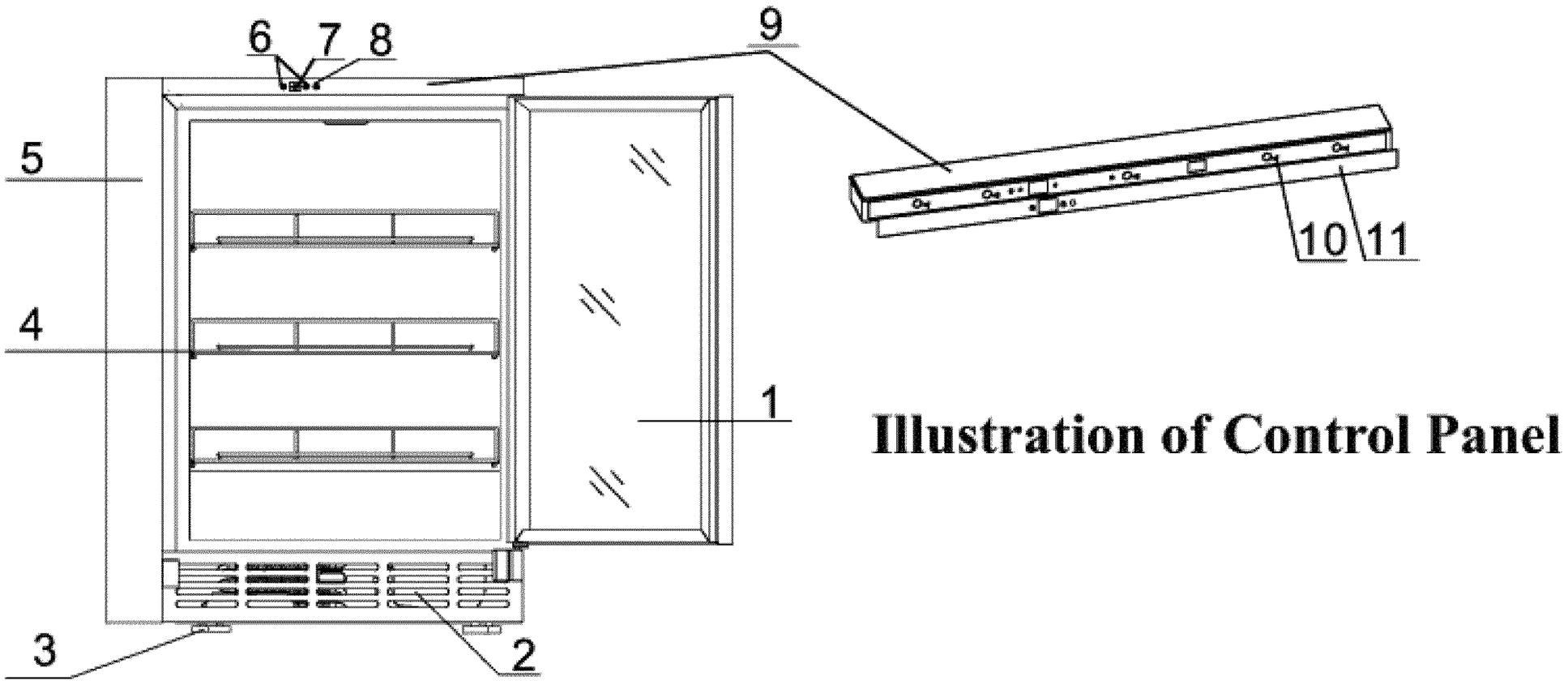


**Illustration of Control Panel**

1. Glass Door
2. Grill
3. Adjustable leveling legs
4. Shelf
5. Cabinet
6. Temperature adjustment button
7. LED Indicator
8. Light button
9. PVC Cover
10. Plastic Panel
11. Screw

**REVERSAL OF DOOR SWING:**

The door of the COOLER could be opened either from the left or right side.

The COOLER, as delivered to you, is installed from the left side.

If you want to reverse the open direction of door, please do as follows:

1. Disconnect the power, take out all beverage and lay the beverage back on the ground. Please remember when finished reversing the door not to power up the unit for 24 hours to allow the coolants to settle in the compressor.
2. Remove the screw on the right downward hinge cover and remove the right downward hinge cover.
3. Remove the screw on the right downward hinge cover and remove the right downward hinge.
4. Remove the screw on the door support and remove the cover of door support.
5. Remove the fixing screw on the door support and remove the door support.
6. At this point you will be able to remove the door.
7. Remove the fixing screw on the door handle, then remove the handle and fix it on the right of the door.
8. Tear off the PVC cover of the top control panel.
9. Remove the five screws and take off the plastic panel.
10. Remove the upper door axis, axis jacket and install them to the left, then tighten the screw.
11. Install the plastic panel and tighten the screws.
12. Recover the new PVC cover packed in the accessory kit.
13. Install the door.
14. Install the left downward hinge (in the accessory kit) and install the right downward hinge cover.
15. Install the door support on the place of the right downward hinge and then fixing the cover.
16. You now have the door fully installed on your desired side.

## INSTRUCTIONS FOR CORRECT AND EFFICIENT USE

- ✧ The COOLER requires a power supply of **115V AC** and **60Hz**. Make certain that you connect the COOLER to a proper voltage supply.
- ✧ **Temperature zones** ensure the proper storage temperature for beverage: The LED indicator shows the temperature in the middle section, the temperature of upper section is slightly higher and the temperature of bottom section is slightly lower.
- ✧ Reduce the frequency of opening the door to conserve energy and maintain proper storage temperature inside. Do not keep the door open for any longer than necessary.
- ✧ You may turn on the interior light to enhance the display of your fine beverage. Please note that the light can produce some heat; therefore, extended or prolonged lighting can affect inner storage temperature.
- ✧ The temperature pre-set by the manufacturer is 54 °F(12 °C). When you connect to power, the indicator shows the temperature of 54 °F(12 °C). The adjustable temperature range is 40 °F - 65 °F (4°C -18°C). If you wish to adjust 54 °F(12 °C), you may press the button "+" to increase or "-" to decrease until you reach the desired temperature.
- ✧ When the power is first turned on or when the power comes on again after an extended power outage, the COOLER may run continuously for several hours in order to cool the entire cabinet to the normal operating temperature. When the interior temperature has stabilized, the COOLER will enter the automatic control mode.
- ✧ Depending on location and usage, the COOLER compressor may run more continuously on hot days, and run relatively less on cold days.
- ✧ If instructions are followed according to manufacturer's specifications, the compressor unit will offer **worry-free operation**.



SN58BCFD04-S1

## PACKAGING AND TRANSPORTATION

- ✧ When unpacking unit for inspection, make certain that all parts are replaced in their original position for re-transporting to further destination.
- ✧ **Do not lay COOLER on its side.** The angle between the cabinet and the ground should not be less than 45° .
- ✧ Do not handle or lift the COOLER by its door.
- ✧ Collision and violent vibrations should be avoided during moving and transportation.

## CAUTIONS FOR OPERATION

- ✧ When using COOLER for the first time or after it has been moved, **wait for 24 hours before plugging in** to avoid damage to the compressor.
- ✧ After removing the power plug from the outlet, wait 5 minutes before plugging COOLER in again to avoid damage to the compressor.
- ✧ Make certain the COOLER is plugged into an **approved circuit or outlet**. To prevent accidents, do not use in an overloaded circuit or outlet. The electrical outlet should have **proper ground fault protection.**
- ✧ Do not use this COOLER if electrical supply outlet is questionable or does not conform to these instructions.
- ✧ Do not damage the insulation on the electrical cord or place weight on the cord. Consumers should not attempt to lengthen the power cord.
- ✧ Remove all packing prior to using the COOLER to ensure proper operation.
- ✧ Explosive containers or hazardous chemicals cannot be stored in the COOLER under any circumstances.
- ✧ Temperature fluctuation is normal.
- ✧ Be careful not to pour water or other liquids on the COOLER. **Moisture on the electrical wires or components could cause electrical shock.**
- ✧ Do not place heavy objects on the COOLER or its door, as excessive

weight may affect its stability and cause the COOLER to topple over.

## MAINTENANCE AND TROUBLESHOOTING

✧ The COOLER does not get cold at all:

Check to ensure the power plug is installed properly. Check the main power supply to make certain a fuse has not blown or the main circuit breaker has not tripped off.

✧ The COOLER does not get cold enough:

Is the temperature set above 54°F(12°C)? Is the door being opened and closed too frequently? Is vent free from any obstruction?

✧ The COOLER is noisy:

Make certain the unit is properly leveled and standing firm. You may have to adjust the leveling legs. Also check to see if there may be another source of noise nearby.

✧ **THE FOLLOWING ARE NOT MALFUNCTIONS:**

Because of refrigerant circulation in evaporator, a common sound similar to running water may sometimes be heard when the compressor is operating. Sometimes there is a pit-a-pat sound when operation starts or stops.

## LIMITED WARRANTY:

Vinotemp International ( “Seller” ) and the person or entity that acquires these goods from Seller ( “Purchaser” ) hereby fully agree to the following terms and conditions of the sale: Shipping fees are the responsibility of the Purchaser whether freight prepaid or freight collect. Seller assumes no responsibility for the goods sold to the Purchaser once the goods have left the Seller’ s premises, including, but not limited to, late delivery by the moving carrier, or for events caused by any difficulty carrier incurs in attempting to fit the goods into the Purchaser’ s place of business or residence due to the size of the goods or otherwise, such as the disassembly and reassembly of the goods. Purchaser assumes all responsibility for delivery, payment of freight, access, measurement, installation, hook-up, moving and storage of the goods. The transportation of all goods is subject to the terms and conditions which the moving carrier imposes on Purchaser including, but not limited to, additional charges imposed per flight of stairs, and/or additional charges resulting from the carrier’ s inability to safely and/or adequately use the building elevator to lift the goods to an upper floor. Any claim for damages incurred during shipment by the carrier of the goods are insured and handled directly with the carrier. Any damages due to manufacture defects will be handled directly with Vinotemp International.

All sales are final, and unless authorized in writing by the Seller, Purchaser is not entitled to return conforming goods, under any circumstances. If Purchaser refuses to accept conforming goods, under any circumstance, the Purchaser is liable for the return and cost of freight both ways and a restocking charge that is 35% of the purchase price of the goods. Purchaser must notify Seller of non-conforming goods within five days of delivery, after which time all goods are deemed accepted.

If Purchaser tenders payment with a check that has insufficient funds (NSF), or stops payment on a check or credit card for any reason, Purchaser agrees to pay for all costs associated with the Seller' s connection or litigation of such a claim, including without limitation extra damages, court costs and attorneys[ fees. Finance charges are retroactive begin at the date of invoice. Collection fees plus NSF fee of 50$ will be added to your invoice. Title to the goods does not pass until payment is received in full by Seller and Seller retains a security interest in the goods until they are paid for in full.

LIMITED WARRANTY: Seller warrants that the goods will be free of defects in materials and workmanship as follows: Furniture style (wood) wine units: all cooling unit parts for a period of 5 (five) years; cabinetry and labor (uninstalled) for a period of 12 (twelve) months from date of sale, removal and re-installation of unit is not included in warranted labor. For the Metal cabinet wine units: parts and labor for cooling system and cabinetry for a period of 12 (twelve) months from date of sale, removal and re-installation of unit is not included in warranted labor. For a B good, scratch and dent or refurbished unit, warranty is 3 months from your dated invoice (parts for function only). Thermoelectric Wine Cellars: 90 (ninety) days from the date of sale. Cigar Humidors and Racking Systems are not warranted. Split Systems and installed products are parts only for 1 year, no labor. There is no warranty on parts purchased separately. Purchaser' s exclusive remedy is limited, at Seller' s option; to repair or replace defective part[s] with either new or factory reconditioned part[s]. Unless otherwise provided by applicable law, Purchaser is responsible for shipping the unit pre-paid to designated facility and Seller will pay return shipping charges in the continental United States for items repaired under warranty with in 12 (twelve) months from date of sale. Since the natural variation in texture, density, grain, color, tone and shade of wood is unavoidable; Seller does not guarantee the texture, color, tone or shade of the wood: nor does seller guarantee the colorfastness of wood or against peeling, chipping, cracking or scratching. Note: Unfinished wood is subject to warping; all wood surfaces must be sealed before placing cellar into

service. Improper placement of the unit will void the warranty. This limited warranty does not cover damage due to such things as accident, misuse, abuse, mishandling, neglect, acts of God, fires, earthquakes, floods, high winds, government, war, riot or labor trouble, strikes, lockouts, delay of carrier, unauthorized repair, or any other cause beyond the control of the Seller, whether similar or dissimilar to the foregoing. This limited warranty applies only inside the Continental US. (Alaska, Puerto Rico and Hawaii are not warranted under the Limited Warranty.)

Purchaser understands and acknowledges that the goods sold here are wine cellars, cigar humidors, and/or other similar units which house wine or cigars. Purchaser assumes all risk of using these units, including risk of spoilage, humidity variations, temperature variations, leaks, fire, water damage, mold, mildew, dryness and similar perils that might occur.

Unless otherwise provided by applicable law, seller is not responsible for incidental or consequential damages, and there are no warranties, expressed or implied, which extend beyond the description on the face hereof; the implied warranties of merchantability and of fitness for a particular purpose are hereby expressly disclaimed. Some states do not allow the exclusion of incidental or consequential damages, or a waiver of the implied warranties of fitness and/or merchantability, so the above limitations may not apply to you. This warranty gives you specific legal rights and you may also have other rights which vary from state to state.

In the event of any dispute between Seller and Purchaser arising out of or relating to these terms and conditions or to the goods sold generally, Purchaser must first file a written claim with Seller within thirty days of the occurrence giving rise to the claim and wait an additional thirty days for a response before initiating any legal action. Any legal proceeding arising out of or relating to these terms and conditions or to the goods sold generally shall be brought solely in the County of Los Angeles. The prevailing party in any

such proceeding is entitled to its attorneys' fees and costs. In no event may Purchaser initiate any legal proceeding more than six months after the occurrence of the event giving rise to the dispute.

The above terms and conditions are the only ones governing this transaction and Seller makes no oral representations of any kind. These Terms and Conditions can only be modified in writing, signed by both Purchaser and Seller. 11-06

For service on your unit due to malfunction please call 800 777 8466.
If the service technician makes an in home visit and finds the unit working correctly, you will be subject to a service fee for the visit.
Please Review Terms And Conditions On www.vinotemp.com
For more Information and Service please email us at info@vinotemp.com

# CIRCUIT DIAGRAM

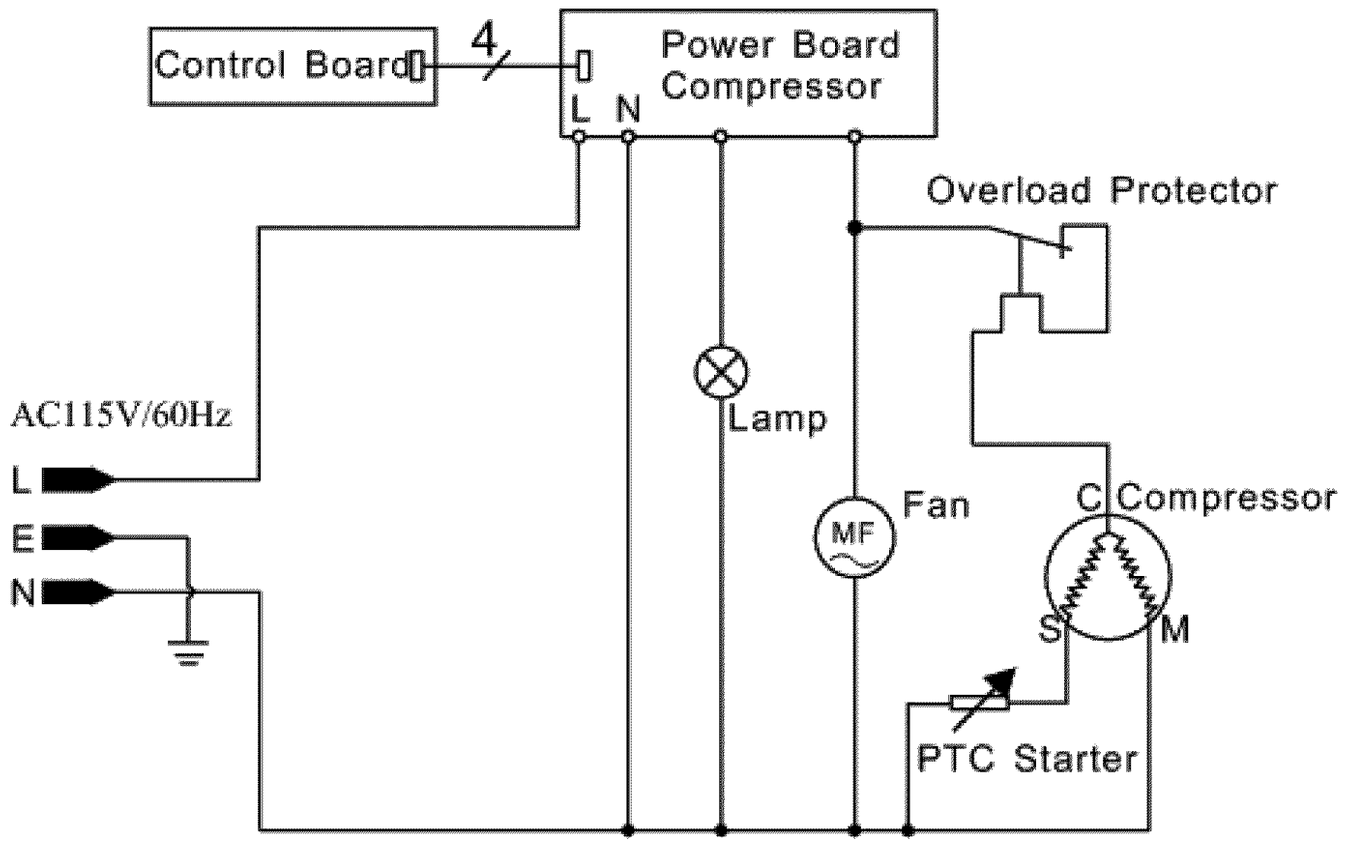

Vinotemp®

P.O.Box 6107,COMPTON,CA,90224
Tel:(310) 886 3332 Fax:(310) 886 3310
Web:www.vinotemp.com
E-mail:info@vinotemp.com

SN58BCFD04-S1