S/M No. : RFS701D001

Service Manual

Refrigerator



Export No. RFS-26D1..
Factory No. RFS-701D..

✔ Caution

In this manual, some parts can be changed for improving their performance without notice. So, If you need the latest parts information, please visit and refer to PPL (Parts Price List)] in Service Infromation Center. (http://svc.dwe.co.kr)

JULY. 2010.

CONTENTS

1. WARNINGS AND PRECAUTIONS FOR SAFETY ---------- 3

2. EXTERNAL VIEW
2-1. External Size ---------- 4
2-2. Name of Each Parts ---------- 5
2-3. Cold Air Circulation ---------- 6

3. SPECIFICATION ---------- 7

4. OPERATION AND FUNCTIONS
4-1. Display ---------- 9
4-2. Control of Ice Maker room ---------- 12
4-3. Defrost Mode ---------- 14
4-4. Forced Defrosting Mode ---------- 16
4-5. Fan Voltage of Control Mode ---------- 16
4-6. DV Heater, Water Tank Heater, Dispenser Heater and Flap Heater Control ---------- 17
4-7. Water PIPE Heater Control ---------- 17
4-8. Buzzer or Alarm Control ---------- 17
4-9. Control of Interior Lights ---------- 18
4-10. Demonstration ---------- 18
4-11. Compensation of R-sensor ON/OFF Temp. ---------- 19
4-12. Control flow & Time chart. ---------- 20
4-13. Error Display ---------- 21
4-14. Summary of Function ---------- 24
4-15. Filter information & Function to adjust the amount of water ---------- 25
4-16. Compensation of F/R-Compartment temperature. ---------- 26

5. WIRING DIAGRAM ---------- 27

6. COMPONENT LOCATE VIEW
6-1. Refrigerator Compartment ---------- 28
6-2. Freezer Compartment ---------- 29
6-3. Automatic Ice Maker Compartment ---------- 30
6-4. Machine Compartment ---------- 30

7. HOW TO CHECK EACH PARTS
7-1. Hose Ice Maker Tube ---------- 31
7-2. Geared Motor Assembly ---------- 32
7-3. Dispenser Solenoid Valve ---------- 33
7-4. Main PCB ---------- 34
7-5. Ice Maker ---------- 35

CONTENTS

8. TROUBLE DIAGNOSIS
8-1. Faulty Start ---------- 37
8-2. Freezer Compartment ---------- 38
8-3. Refrigerator Compartment ---------- 44
8-4. Operation Noise of Refrigerator ---------- 49
8-5. Door ---------- 54

9. COOLING CYCLE HEAVY REPAIR
9-1. Summary of Heavy Repair ---------- 55
9-2. Precaution during Heavy Repair ---------- 56
9-3. Practical Work for Heavy Repair ---------- 57
9-4. Standard Regulations for Heavy Repair ---------- 59
9-5. Brazing Reference Drawing ---------- 60

10. INSTALLATION GUIDE
10-1. Installation Preparation ---------- 61
10-2. If the Refrigerator can not enter the Door ---------- 61
10-3. Refrigerator Leveling & Door Adjustment ---------- 61
10-4. Water Line Installation ---------- 61
10-5. Dispenser Water Flow ---------- 62

11. EXPLODED VIEW & PART LIST
11-1. Exploded View (Model : RFS-26D1T) ---------- 63
11-2. Parts list (Model : RFS-26D1T) ---------- 72

1. WARNINGS AND PRECAUTIONS FOR SAFETY

Please observe the following safety precautions in order to use safely and correctly the refrigerator and to prevent accident and danger during repair.

1. Be care of an electric shock. Disconnect power cord from wall outlet and wait for more than three minutes before replacing PCB parts.
   Shut off the power whenever replacing and repairing electric components.

2. When connecting power cord, please wait for more than five minutes after power cord was disconnected from the wall outlet.

3. Please check if the power plug is pressed down by the refrigerator against the wall.
   If the power plug was damaged, it may cause fire or electric shock.

4. If the wall outlet is over loaded, it may cause fire.
   Please use its own individual electrical outlet for the refrigerator.

5. Please make sure the outlet is properly earthed, particularly in wet or damp area.

6. Use standard electrical components when replacing them.

7. Make sure the hook is correctly engaged.
   Remove dust and foreign materials from the housing and connecting parts.

8. Do not fray, damage, machine, heavily bend, pull out or twist the power cord.

9. Please check the evidence of moisture intrusion in the electrical components.
   Replace the parts or mask it with insulation tapes if moisture intrusion was confirmed.

10. Do not touch the icemaker with hands or tools to confirm the operation of geared motor.

11. Do not let the customers repair, disassemble and reconstruct the refrigerator for themselves.
   It may cause accident, electric shock, or fire.

12. Do not store flammable materials such as ether, benzene, alcohol, chemicals, gas, or medicine in the refrigerator.

13. Do not put flower vase, cup, cosmetics, chemicals, etc., or container with full of water on the top of the refrigerator.

14. Do not put glass bottles with full of water into the freezer.
   The contents shall freeze and break the glass bottles.

15. When you scrap the refrigerator, please disconnect the door gasket first and scrap it where children are not accessible.

2. EXTERNAL VIEWS

2-1. External Size

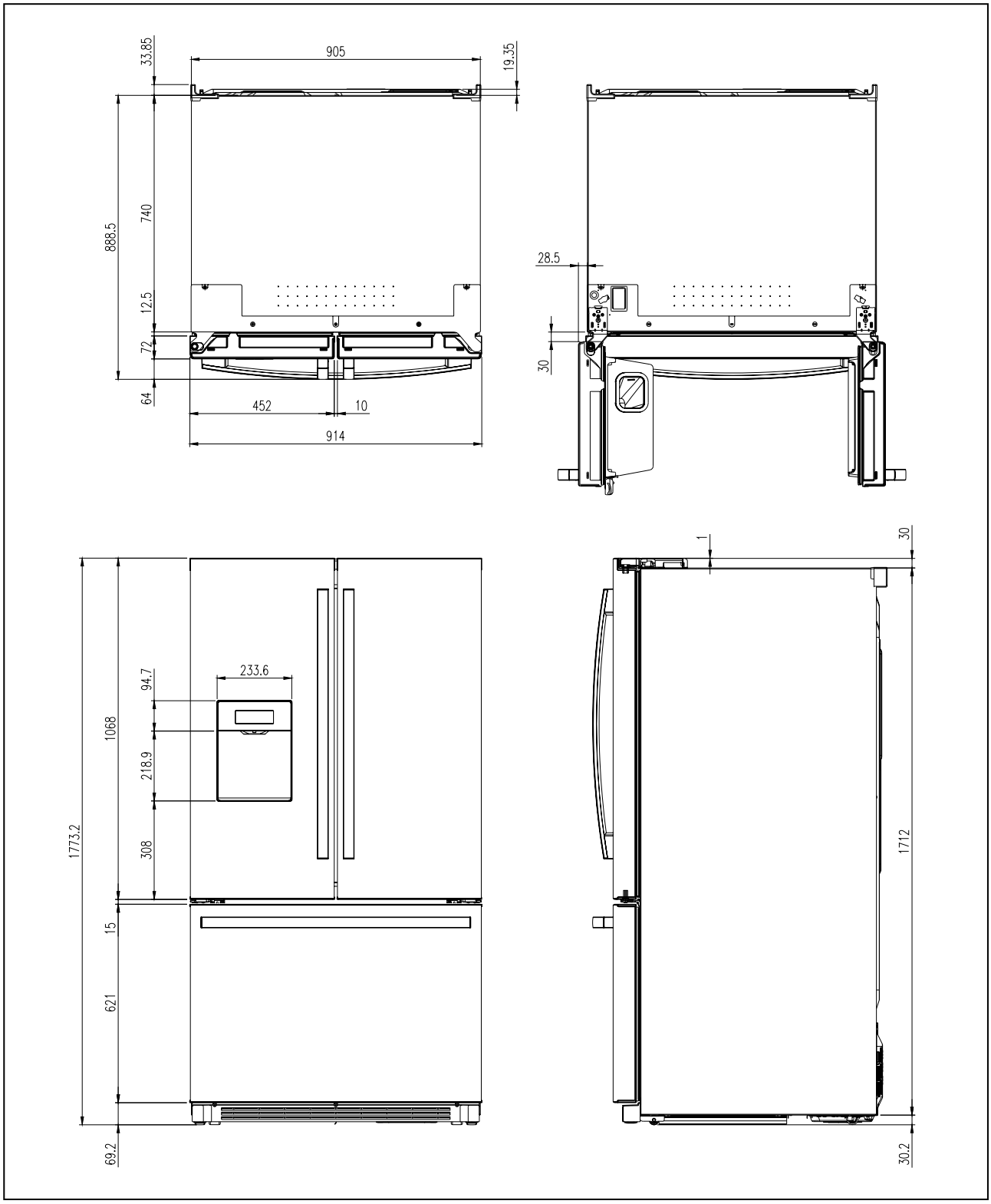

2-2. Name of Each Parts

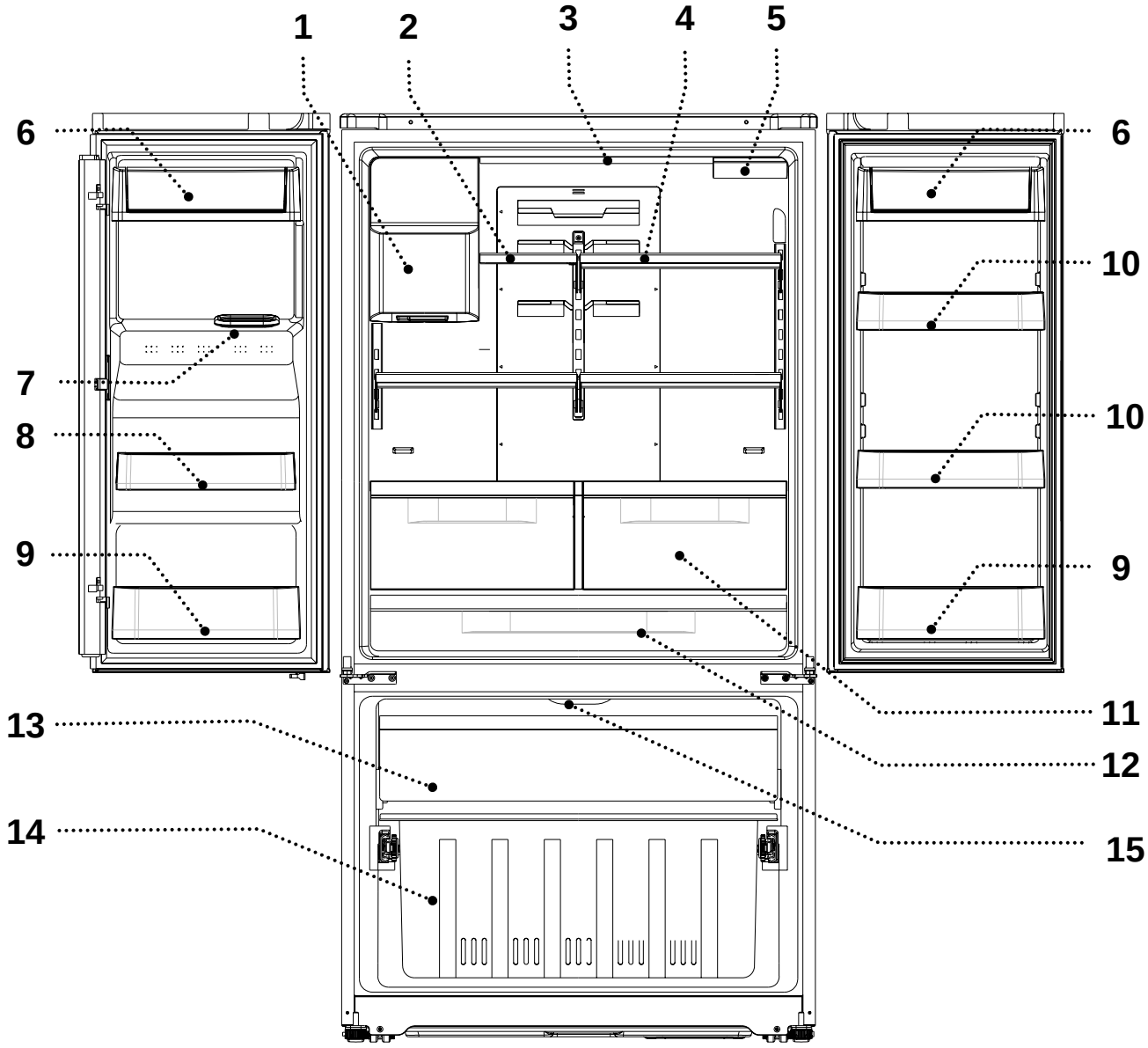

REFRIGERATOR COMPARMENT		FREEZER COMPARTMENT
1. ICE CUBES STORAGE CASE	6. POCKET DAIRY	11. CASE VEGETABLE
2. SHELF R SM	7. WATER/ICE DISPENSER	12. CASE WIDE
3. REFRIGERATOR LAMP	8. POCKET SM	13. CASE F
4. SHELF R	9. POCKET GALLON	14. CASE F DRAW
5. WATER FILTER	10. POCKET UTILITY	15. FREEZER LAMP

2-3. Cold Air Circulation

Refrigerator Compartment

Freezer Compartment

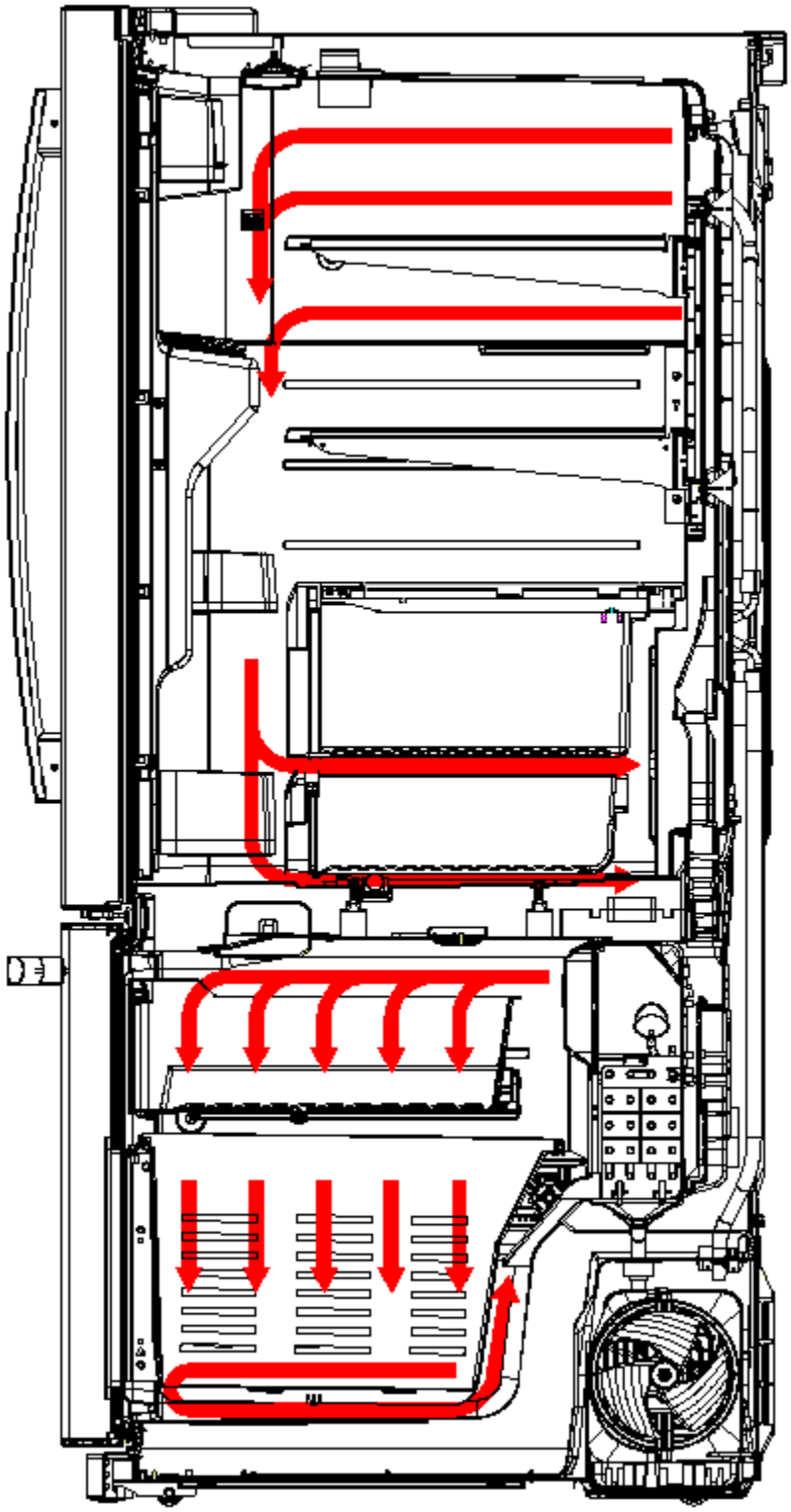

3. SPECIFICATION

Item		Specification
Buyer NO.		RFS-26D1..
Factory NO.		RFS-701D..
Gross Volume (Li)	Total	737.4Li (26.04 ft^3)
	Freezer	216.7 Li (7.65 ft^3)
	Refrigerator	520.7Li (18.39ft^3)
External Dimension (Width * Depth * Height)		914mm * 858.4mm *1773.2mm(w/o Handle)
Weight		145kg
COOLING	Refrigerant	R-134a
	Quantity	190g
	Evaporator	Fin Type
	Condenser	Fan Cooling System
	Dryer	Molecular Sieve XH-9
	Capillary Tube	ID0.7 * T0.55 * L2200

Item		Specification
Model Name		RFS-26D1T
SENSOR	Defrost	PBN-43B
	Freezer	PT-38
	Refrigerator	PBN-43B
	Ice Maker	PT-38
	RT	PBN-43B
HEATER	Sheath F AS	200W
	Sheath R AS	200W
	R Motor AS(In URT)	10W
	R Motor AS(Behind EVA)	7W
	R Return Duct AS	7W
	W/Tank AS	4W
	Hose AS	5W
	DV AS	8W
	Dispn AS	3W
	I/Flap AS	2W
ELECTRICAL PARTS	Fuse Temp (Defrost)	AC250V , 10A , 77℃
	Freezer-Fan Motor	D4612AAA29 / DC13V / 1850±150 rpm
	Refrigerator-Fan Motor	100R IMPELLER / DC13V / 2000±200 rpm
	Condenser-Fan Motor	D4612AAA28 / DC13V / 1100±150 rpm
	Freezer-Lamp	6-LED
	Refrigerator-Lamp	24-LED
	Dispenser-Lamp	4-LED
	Door Switch(Freezer / Refrigerator)	SP201R-7DR/SP101B-201(G)

4. OPERATION AND FUNCTIONS

4-1. Display

INPUT	CONTROL OBJECT
Front PCB button Freezer Set , Fridge Set Qucik ice , Light/Filter Water, Crushed ice, Cube ice Alarm/Lock	FCP C-LED

CONTENTS	REMARKS

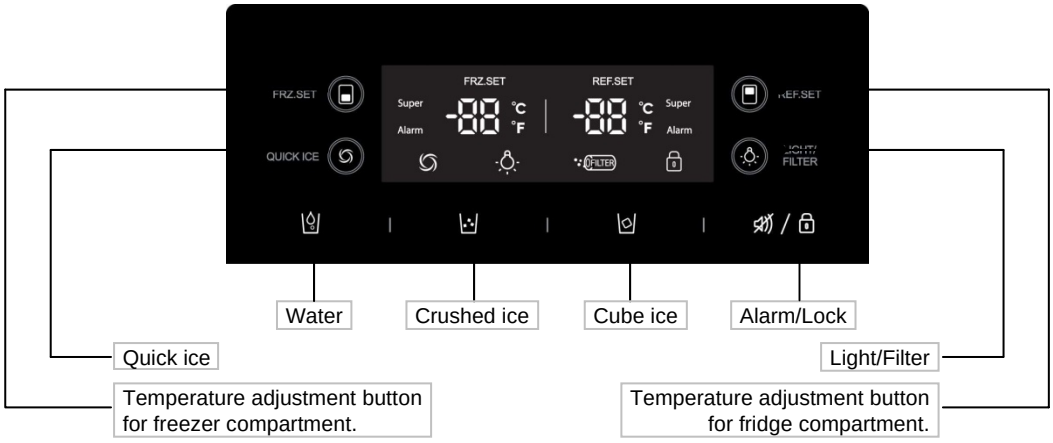

1. Display control

FCP-LED	Control		
88 Display (Set Temp.)	Initial mode (Normal)	Freezer	Refrigerator
		0°F /-18℃	39°F/4℃
Super Freezer , Super Fridge	Dial		
Freezer Alarm, Fridge Alarm	Dial		
Quick ice Icon	Dial		
Dispenser Lamp Icon	Dial		
Water Filter Change Icon	Dial		
Lock Icon	Dial		

2. “Freezer Set” Button
1) Temperature control of freezer compartment
2) 9 step mode of successive temperature mode.
3) Initial mode by power input : “0°F”
※Whenever touch button, setting is repeated in the order of
-18℃(0°F) → -19℃(-2°F)→ -20℃(-4°F)→-21℃ (-6°F)→-22℃ (-8°F)→
-22℃ (-8°F)→ -15℃(6°F)→-16 ℃ (4°F)→ (2°F).
4) When super mode(5th press) is chosen, the icon super
(Super Freezer) is ON, and the icon is Off when released

Letters are indicated on 88 Display LED

Temperature Change	power input (normal)	1st Press	2nd Press	3th Press	4th Press (max)	5th Press (super)	6th Press (min)	7th Press	8th Press
Temp indication	0°F	-2°F	-4°F	-6°F	-8°F	-8°F	6°F	4°F	2°F
	-18℃	-19℃	-20℃	-21℃	-22℃	-22℃	-15℃	-16℃	-17℃

Reference
※To change display for Celsius degree (℃) or Fahrenheit degree (°F)
⇒ Touch “Quick ice” button 15 seconds, in “Lock” condition

CONTENTS	REMARKS

3. “Fridge Set” button.
   1) Temperature control of Fridge compartment
   2) 8 step mode of successive temperature mode.
   3) Initial mode by power input : “39˚F”
   ※Whenever Touch button, setting is repeated in the order of
   4℃(39˚F) →3℃ (37˚F) →2℃ (35˚F) → 2℃ (35˚F) →8℃ (47˚F) → 7℃ (45˚F) →6℃ (43˚F) →. 5℃(41˚F)
4) When super mode(3th press) is chosen, the icon super (Super Fridge) is ON, and the icon is off when released.

Letters are indicated on 88 Display LED

Temperature Change	power input (normal)	1st Press	2nd Press (max)	3th Press (super)	4th Press (min)	5th Press	6th Press	7th Press
Temp indication	39˚F	37˚F	35˚F	35˚F	47˚F	45˚F	43˚F	41˚F
	4℃	3℃	2℃	2℃	8℃	7℃	6℃	5℃

4. “Quick ice” button
   1) When Quick ice mode is chosen, the icon (Quick ice) is ON
   2) When Pushing the button again, the icon is OFF

5. “Light/Filter” button
   1) Controls Dispenser LED Lamp
      ① When “Light/Filter” is touched, the icon is ON. and Dispenser LED Lamp Lights
      ② If “Light/Filter” is touched while the icon is ON, the icon is OFF and Dispenser LED Lamp lights out
   2) Filter reset if “Light/Filter” is touched and hold for 3 sec.
      ① From 6 months after power on, filter icon FILTER flickers until the filter is reset.

6. “Water” button
   1) When “Water” is touched, Water is supplied

7. “Crushed ice” button
   1) When “Crushed ice” is touched, Crushed ice is supplied

8. “Cube ice” button
   1) When “Cube ice” is touched, Cubed ice is supplied

Reference : Please wait for 2-3 seconds in order to take final ice or drops of water when taking out cup from the pressing switches after taking ice or water.

CONTENTS	REMARKS
9. “Alarm/Lock” button 1) When the alarm sounds, touch “Alarm/Lock” will stop alarming sounds. 2) This button stops operation of different button ① If you touch “Alarm/Lock” button for 2sec, “Alarm/Lock” icon  is on. ② Press this button to lock out this case and to keep temperature and function setting. 3) Touch “Alarm/Lock” button again for 2 sec to stop it. 10. Switching temperature display 1) If you touch “Quick ice” icon on the button panel hold for 15 sec on the lock status. temperature in the display switches between ˚F↔℃ 2) Temperature is reset to ˚F when the power off and on. 11. power save function. All icons in the display lights off when neither button input, nor door open last for 60 sec. ※ The actual inner temperature varies depending on the food status, as the indicated setting temperature is a target temperature, not actual temperature within refrigerator. ※ Refrigeration function is weak in the initial time. Please adjust temperature as above after using refrigerator for minimum2~3 days.	**Reference :** Please wait for 2-3 seconds in order to take final ice or drops of water when taking out cup from the touch switches after taking ice or water.

4. OPERATION AND FUNCTIONS

4-2. Control of ice maker room

INPUT	CONTROL OBJECT
I DUCT/ F/ R Sensor Flow Sensor Freezer Set Compressor	R-ice Fan

CONTENTS | **REMARKS**

1. Ice Room Sensor on/off Setting Value of Ice maker room

	Ice storage mode	Ice make mode			Precool	
		RT<59°F (15℃)	59°F(15℃) < RT < 73°F(23℃)	73°F(23℃) < RT	RT<59°F (15℃)	59°F (15℃) < RT
ON	16°F(-9℃)	5°F(-15℃)	0°F(-18℃)	1°F(-17℃)	12°F(-11℃)	16°F(-9℃)
OFF	12°F(-11℃)	-2°F(-19℃)	-8°F(-22℃)	-6°F(-21℃)	5°F(-15℃)	9°F(-13℃)

2. Ice storage mode : After 1 hour detect full Ice switch and when Five times of consecutive water supply failure to Ice Maker.
3. Ice Make mode : Enter it 120 minutes during Ice storage mode later that RT 15 ℃ under
4. R-ice Fan are Close of Deforst Mode
5. Comp and R-ice Fan turn On about 10 hours of Quick Ice Mode

4. OPERATION AND FUNCTIONS

4-2. Control of ice maker room

CONTENTS

6. Ice maker actuation algorism

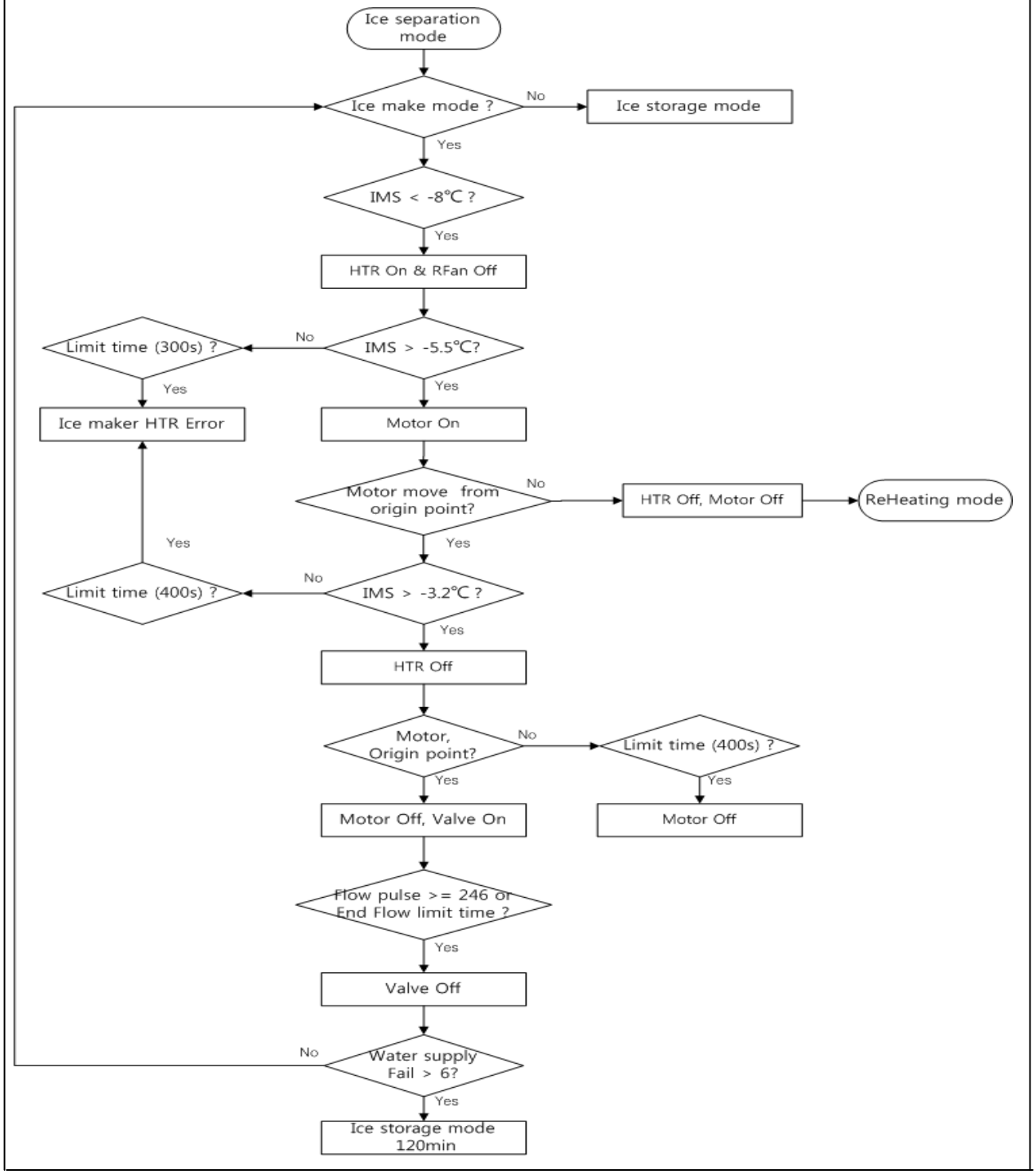

4-3. Defrost Mode

INPUT	CONTROL OBJECT
1. Defrosting Cycle	1. Comp 2. F/R-ICE/C Fan 3. FD/RD Heater

CONTENTS	REMARKS

1. Defrost Mode

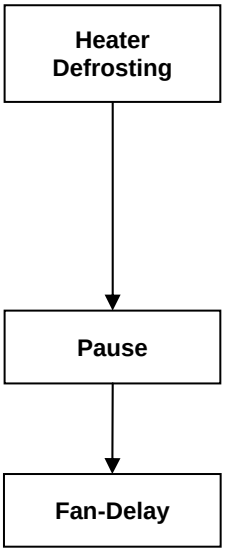

Heater Defrosting
1) Comp, F/R-ICE/C Fan : OFF
R Damper : CLOSE
FD/RD Heater : ON
2) Time limit
30 seconds : Heater is ON regardless of D-sensor temperature right after defrosting start
30 minutes : in case of FD/rD Error
50 minutes : in normal control state
3) If FD-sensor ≥55.4˚F, F Heater Defrosting is OFF
If RD-sensor ≥ 55.4˚F, R Heater Defrosting is OFF

Pause
Time : 7 minutes
Comp, F/R-ICE/C fan, Damper, Heater etc. : OFF

Fan-Delay
1) Time : 5 minutes
Comp C Fan : ON
F/R-ICE fan, Damper, Heater : OFF

2.The defrost mode start with the following conditions

1) Total operation time of comp. becomes : 6,8,10,…… hours.
① Any error mode : R1, F1, u1, FD, rD, F3, r3, RT/S, Door-switch etc.)

2) Defrosting mode starts unconditionally as long as total comp. work time is 20 hours, even if the above conditions 1) are not satisfied.

3) Defrosting mode starts unconditionally as long as comp. continuing work time is 8 hours, even if the above conditions 1) and 2) are not satisfied.

4) Defrosting mode starts immediately as long as total time of [comp. ON + comp. OFF] is over 60 hours, even if the above 1) and 2) and 3) conditions are not satisfied.

3. In providing initial power (or returning power failure)

If FD-sensor or RD-sensor temp. ≤ 38.3 ˚F, defrosting mode starts .

CONTENTS	REMARKS

4. Flow Chart of Defrosting Start

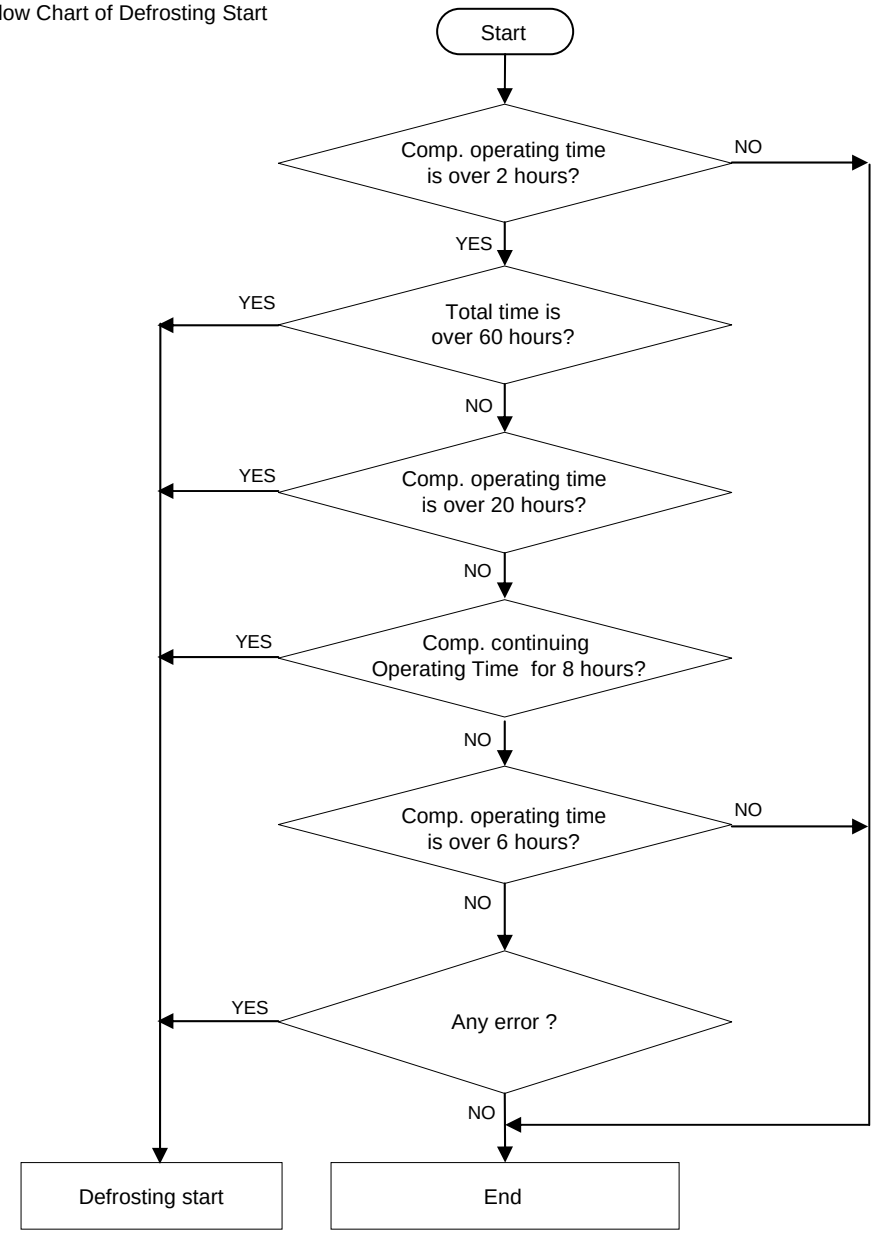

4-4. Forced Defrosting Mode

INPUT	CONTROL OBJECT
1. Defrosting Cycle	1. Comp 2. F/R-ICE/C Fan 3. FD/RD Heater

CONTENTS

1. A/S Defrosting Mode (Heater defrost → Pause → Fan Delay)

Heater Defrosting

Heater Defrosting
1) Comp, F/R-ICE/C Fan : OFF
R Damper : CLOSE
FD/RD-Heater : ON
2) Time limit
30 seconds : Heater is ON regardless of FD/RD-sensor temperature right after defrosting start
30 minutes : in case of FD/rD-Error
50 minutes : in normal control state
3) If FD-sensor ≥55.4˚F, F Heater Defrosting is OFF
If RD-sensor ≥ 55.4˚F, R Heater Defrosting is OFF

Pause

Pause
Time : 7 minutes
Comp, F/R-ICE/C Fan, Damper, Heater etc. : OFF

Fan-Delay

Fan-Delay
1) Time : 5 minutes
Comp, C Fan : ON
F/R-ICE Fan, Damper, Heater : OFF

2. How to start
; In “Lock” mode, push “Frideg Set” button 5 times while pushing “Freezer Set” button simultaneously.
3. How to proceed
1) same as normal defrosting
2) Heater is ON regardless of FD/RD-sensor temp. at first 30 seconds.
(Check of defrosting current)

REMARKS

4-5. Fan Voltage of Control Mode

INPUT	CONTROL OBJECT
1. F-Sensor 2. R-Sensor	1. F FAN, R-ICE FAN, C FAN

CONTENTS

1. Fan voltage of control mode

FAN	Freezer	R ICE	Condenser
Voltage	13 V	13 V	13 V

REMARKS

4-6. DV Heater, Water Tank Heater, Dispenser Heater and Flap Heater Control

INPUT	CONTROL OBJECT
1. Comp **2. R-Sensor, RT-Sensor**	DV Heater Water Tank Heater Dispenser Heater Flap Heater

CONTENTS

1. They are linked with comp by Fridge set

Fridge set		35˚F	37˚F	39˚F	41˚F	43˚F	45˚F	47˚F
DV Heater	Working Rate (on/off)	20/20	19/21	18/22	17/23	13/27	10/30	8/32
Water Tank Heater		17/23	16/24	14/26	12/28	9/31	5/35	0/40
Dispenser Heater		25(20) /15(20)	18(24) /22(16)	16(22) /24(18)	14(20) /26(20)	11(17) /29(23)	5(12) /35(28)	0(6) /40(34)
Flap Heater								

Ex) 25(20)/15(20) :
Dispenser Heater On/Off Time is 25min/15min when ice maker room temp is lower than 14˚F
Dispenser Heater On/Off Time is 20min/20min when ice maker room temp is higher than 14˚F

2. Water Tank Heater is On when RT-S is less than 59˚F
3. When Poor Refrigeration is sensed, They are linked with comp about 5hours

REMARKS

4-7. Water PIPE Heater Control

INPUT	CONTROL OBJECT
1. **RT-Sensor**	Water PIPE Heater

CONTENTS

1. It is linked with comp when RT-S is less than 59 ˚F
2. It is On of HTR Defrosting Mode
3. It is On of Quick ice Mode

REMARKS

4-8. Buzzer or Alarm Control

INPUT	CONTROL OBJECT
1. Control Front-PCB buttons 2. Door Switch 3. Initial Power Input	Buzzer

CONTENTS

1. Buzzer sounds if any button of Front-PCB is pushed.
2. Buzzer sounds 3 seconds after initial power input.
3. Buzzer sounds in case of A/S Forced Defrosting and Short (pull down) Operation or explanation mode.
4. If door is open, buzzer sounds after every 1 minutes for 5 minutes (Door open alarm)

REMARKS

4-9. Control of Interior Lights

INPUT	CONTROL OBJECT
1. Refrigerator door switch 2. Freezer door switch 3. Water, Crushed ice, Cube ice switch	Lamp

CONTENTS	REMARKS
1. Control Refrigerator Compartment Lights. R-Lights turn ON/OFF by R-door switch ON/OFF (※ For 20 minutes after sensing door open, the lights turn off automatically through door close is not sensed.) 2. Control of Freezer Compartment Lights. F-Light turn ON/OFF by F-door switch ON/OFF (※ For 20 minutes after sensing door open, the lights turn off automatically through door close is not sensed.) 3. Dispenser lamp control Dispenser lamp turns ON/OFF by Water, Crushed ice, Cube ice switch. Dispenser lamp turns ON for 5 seconds after sensing switch close.	

4-10. Demonstration

INPUT	CONTROL OBJECT
1. “Fridge Set , Light/Filter” button	Comp F/R-ice Fan FD/RD Heater

CONTENTS	REMARKS
1. Start Under “Lock” mode, Push “Light/Filter” button 5 times while touch “Fridge Set” and “Quick ice” button simultaneously. 2. Control 1) All other electrical components are OFF except for Dispensor LED 2) Fan Control Door open → Fan ON / Door close → Fan OFF. 3) Display freezer, fridge display step by step. 3. Stop or termination 1) During Demo mode, touch “Light/Filter” button 5 times while touch “Fridge Set” and “Quick ice” button simultaneously. 2) Power in again	

4-11. Compensation of R-sensor ON/OFF Temp.

INPUT	CONTROL OBJECT
Main PCB	Resistance of R-sensor ON/OFF Temp. of Refrigerator

CONTENTS	REMARKS

Compensation of R-sensor ON/OFF temp. (down)

In case temperature of refrigerator compartment is weak or insufficient,
take the following action.

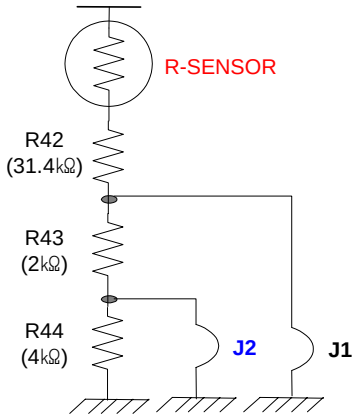

R42 : R-SENSOR standard resistance in normal mode (31.4kΩ)
In case of weak ref.
1) Cut **J1** to increase the standard resistance by **2kΩ ⇒ 3°F down**
2) Cut **J1** & **J2** to increase the standard resistance by **4kΩ ⇒ 6°F down**

J1	-	cut	-	cut
J2	-	-	cut	cut
Temperature compensation	0°F	-3°F	0°F	-6°F
Resistance	R42	R42+R43	R42	R42+R43+R44
	31.4kΩ	(31.4+2)kΩ	31.4kΩ	(31.4+2+4)kΩ

4-12. Control flow & Time chart.

INPUT	CONTROL OBJECT
Water/Crushed ice/Cube ice	Dispenser Lamp Dispenser S/V Valve Gear Motor Cube S/V Water(Dis) S/V

CONTENTS	REMARKS

1. Control flow & time chart

① Crushed Ice

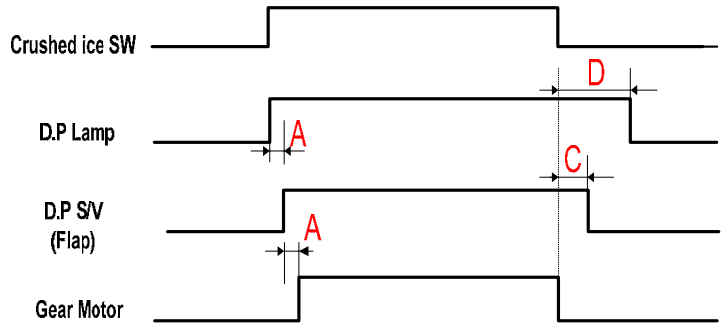

② Cube Ice

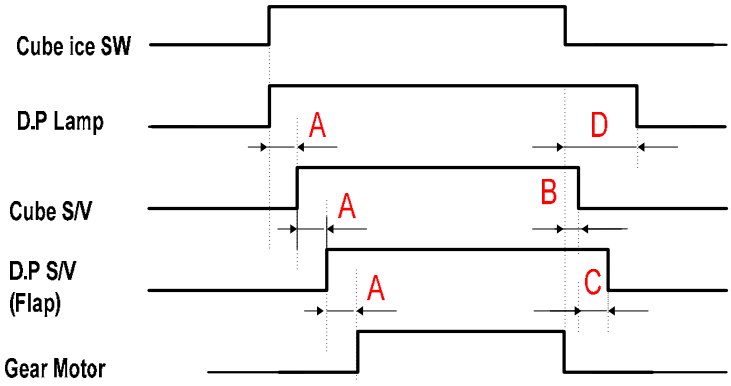

③ Water

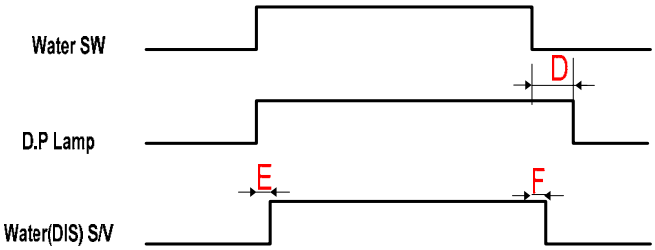

Delay time : A = 0.5sec , B =0. 5sec , C = 2.0sec , D = 5.0sec , E=0.3sec, F=0sec

4-13. Error Display

INPUT	CONTROL OBJECT
Temperature Control Buttons	88 Display CLED

CONTENTS	REMARKS

1. How to start
   1) Under “Lock” mode, press “Quick ice” button 5 times while touch “Freezer Set” and “Fridge Set” button at the same time.
   2) The front C-LED displays as the right diagram shows ([Ex.] Time Display of 0003 signifies 3 minutes of power on time.)
   3) Press “Freezer Set” button and the following value is displayed successively.
      ① Operating Time
      ② F-Sensor temperature
      ③ R-Sensor temperature
      ④ FD-Sensor temperature
      ⑤ RD-Sensor temperature
      ⑥ IM-Sensor temperature
      ⑦ IR-Sensor temperature
      ⑧ RT-Sensor temperature
      ⑨ Filter remaining time until change (First check ; 4,320Hr)
      Refer to Filter Information Reset of C-LED of front control panel.
   4) Error is displayed only if there is any ; it is skipped if no error.

2. How to stop
   1) Touch “Lock” button 1 time.
   2) It stops automatically in 4 minutes from the start.

3. All the error codes are reset if they turn to be normal.

4. Error code

ERROR CODE	CONTENTS
F1	F-sensor : disconnection (“Lo”), short (“Hi”)
r1	R-sensor : disconnection (“Lo”), short (“Hi”)
i5	IM-sensor : disconnection (“Lo”), short (“Hi”)
FD	FD-sensor : disconnection (“Lo”), short (“Hi”)
rD	RD-sensor : disconnection (“Lo”), short (“Hi”)
iD	IR-sensor : disconnection (“Lo”), short (“Hi”)
rt	RT-sensor : disconnection (“Lo”), short (“Hi”)
dr	R-Door Switch : defective
dF	F-Door Switch : defective
C1	Cycle : abnormal or defective
F3	Return after defrosting : abnormal or defective(FD-S)
r3	Return after defrosting : abnormal or defective(RD-S)
ES	“Water”, “Crushed ice”, “Cube ice” : error
D2	Display forced defrost mode for A/S

CONTENTS	REMARKS
5. Control way of Error (if any) 1) “F1” error Cause : F-sensor disconnection or short Check point : Measure the resistance between both terminals after separating CN14 of the Main PCB. If F-sensor is disconnected or shorted , change the F-sensor in the freezer compartment. How to reset : If F-sensor is normal, the error is terminal temperature. 2) “R1” error Cause : R-sensor disconnection or short Check point : Measure the resistance between both terminals after separating CN15 of the Main PCB. If R-sensor is disconnected or shorted , change the F-sensor in the fridge compartment. How to reset : If R-sensor is normal, the error is terminal temperature. 3) “i5” error Cause : IM-sensor disconnection or short Check point : Measure the resistance between both terminals after separating CN19 of the Main PCB. If IM-sensor is disconnected or shorted , change the IM-sensor in the fridge compartment. How to reset : If IM-sensor is normal, the error is terminal temperature. 4) “FD” error Cause : FD-sensor disconnection or short Check point : Measure the resistance between both terminals after separating CN15 of the Main PCB. If FD-sensor is disconnected or shorted , change the FD-sensor on the evaporator. How to reset : If FD-sensor is normal, the error is terminated automatically. 5) “rD” error Cause : RD-sensor disconnection or short Check point : Measure the resistance between both terminals after separating CN15 of the Main PCB. If RD-sensor is disconnected or shorted , change the RD-sensor on the evaporator. How to reset : If RD-sensor is normal, the error is terminated automatically. 6) “iD” error Cause : IR-sensor disconnection or short Check point : Measure the resistance between both terminals after separating CN15 of the Main PCB. If IR-sensor is disconnected or shorted , change the IR-sensor on the evaporator. How to reset : If IR-sensor is normal, the error is terminated automatically. 7) “rt” error Cause : RT-sensor disconnection or short Check point : Measure the resistance between both terminals after separating CN15 of the Main PCB. If RT-sensor is disconnected or shorted , change the RT-sensor on the xxxxx. How to reset : If RT-sensor is normal, the error is terminated automatically.	

CONTENTS	REMARKS
8) “C1” error Cause : in case comp. works for over 3 hours when FD-S or RD-S temp. is over 23 °F Check point : Refrigerant leakage. 9) Door error (“dF” “dR” on display) Cause : in case it senses that door is open for more than 1 hour. Check point : F/R door is opened or not. 10) “F3” error Cause : in case defrosting return is done by time limit of 50 min Check point : Measure the resistance between both terminals of the Freezer defrost heater. (Assembled with evaporator) 11) “r3” error Cause : in case defrosting return is done by time limit of 50 min Check point : Measure the resistance between both terminals of the Fridge defrost heater. (Assembled with evaporator) 12) “ES” error (Water/Crushed ice/Cube ice) error) Cause : When they sense 1min continuously Check the buttons(“Water/Crushed ice/Cube ice“) of the FCP. 13) “d2” mode (A/S forced defrosting mode) Push “Fridge Set” button 5 times while pushing “Freezer Set” button simultaneously. Control : A/S forced defrosting control If FD-sensor or RD-sensor temp is over 55°F, the mode is terminated automatically. * When all ERROR CODE is normal, the Refrigerator reset	

4-14. Summary of Function

INPUT	CONTROL OBJECT
Each button	

CONTENTS	REMARKS

1. All the modes are started “Lock” mode (except “Water Filter Reset” mode)

2. Element A/S Function

Temp Display change	“Quick ice” button for 15 seconds
Forced Defrosting	“Freezer Set” + “Fridge Set” 5 times
Reset water filter	“Light/Filter” for 3 seconds
Demo function	“Quick ice” + “Fridge Set” + “Light/Filter” 5 times
Pull Down	“Freezer Set” + “Fridge Set” + “Light/Filter” 5 times
Error display	“Freezer Set” + “Fridge Set” + “Quick ice” 5 times
EEPROM clear	“Quick ice” + “Light/Filter” + “Fridge” 5 times
Compensation of F/R-Compartment temperature	“Light/Filter” + “Quick ice” 5 times

4-15. Filter information & Function to adjust the amount of water

INPUT	CONTROL OBJECT	
Temperature Control Buttons	88 Display CLED	
CONTENTS		**REMARKS**
Filter information 1. Filter Exchange Information : Record a real-time from the point of power input. - The filter is normal for 6 months after the first installation. - When the time comes to change or reset, press the Light/Filter button for 3 seconds. 2. Function of display of filter change time [step1] Press the Alarm/Lock button for 2sec. [step2] Press Quick ice button 5 times while pressing “Freezer Set” and “Fridge Set” button. [step3] Press Freezer Set button 8 times successively. [step4] Remaining time is display (ex. 40 : 12 means that 4012 minutes remains until the filter exchange.) [step5] Reset : Push Lock button or it is automatically reset after 4 minutes.		

4-16. Compensation of F/R-Compartment temperature.

INPUT	CONTROL OBJECT
Front PCB button Freezer Set , Refrigerator Set Super Freeze , Super Cool Dispenser , Lock	ON/OFF Temp. of Freezer & Refrigerator Compartment

CONTENTS	REMARKS

1. How to start
   1) **Freezer Compartment** : Under “Lock” mode, press “Light/Filter” button 5 times while pressing “Quick ice” button at the same time.
   2) **Fridge Compartment** : Under “Lock” mode, press “Light/Filter” button 5 times while pressing “Quick ice” button at the same time.
   3) Initial setting

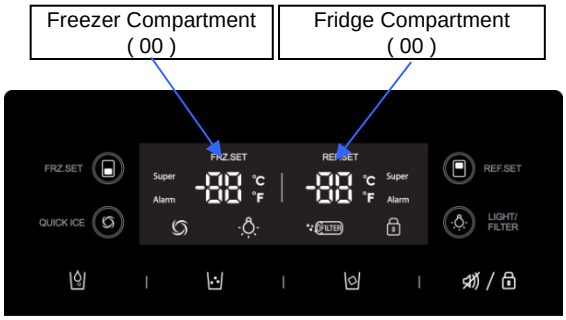

2. In case change of “**Freezer Compartment**” ON/OFF temperature

ON/OFF temp.	up(+)	down(-)
button	Freezer Set	Quick ice
Range of setting Value	"00" ~ “+30"	"00" ~ “-30"
Range of Temp. Change	0 ~ +3.9 ˚F	0 ~ -3.9 ˚F
“Temp. Change” = “Setting Value” × “0.13˚F”		

3. In case change of “**Fridge Compartment**” ON/OFF temperature

ON/OFF temp.	up(+)	down(-)
button	Fridge Set	Light/Filter
Range of setting Value	"00" ~ “+30"	"00" ~ “-30"
Range of Temp. Change	0 ~ +5.4 ˚F	0 ~ -5.4 ˚F
“Temp. Change” = “Setting Value” × “0.18˚F”		

※ If 10 days passes from initial power on,
the “setting value” is memorized in the EEPROM automatically.
※ In order to clear this “setting value” ,
it is needs “EEPROM clear” (“Quick ice” + “Light/Filter” + “Fridge” 5 times)

5. WIRING DIAGRAM

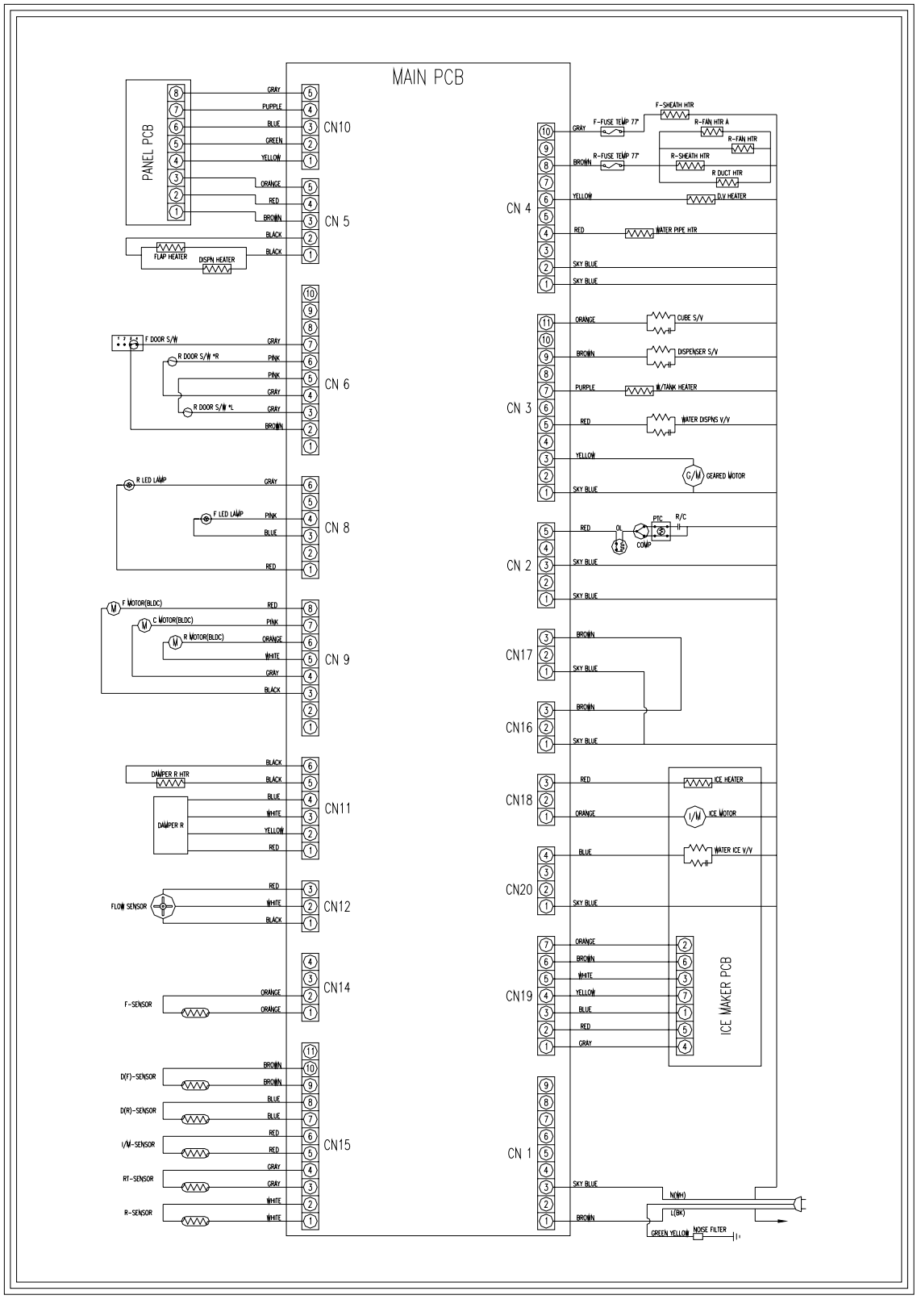

6. COMPONENT LOCATE VIEW

6-1. Refrigerator Compartment

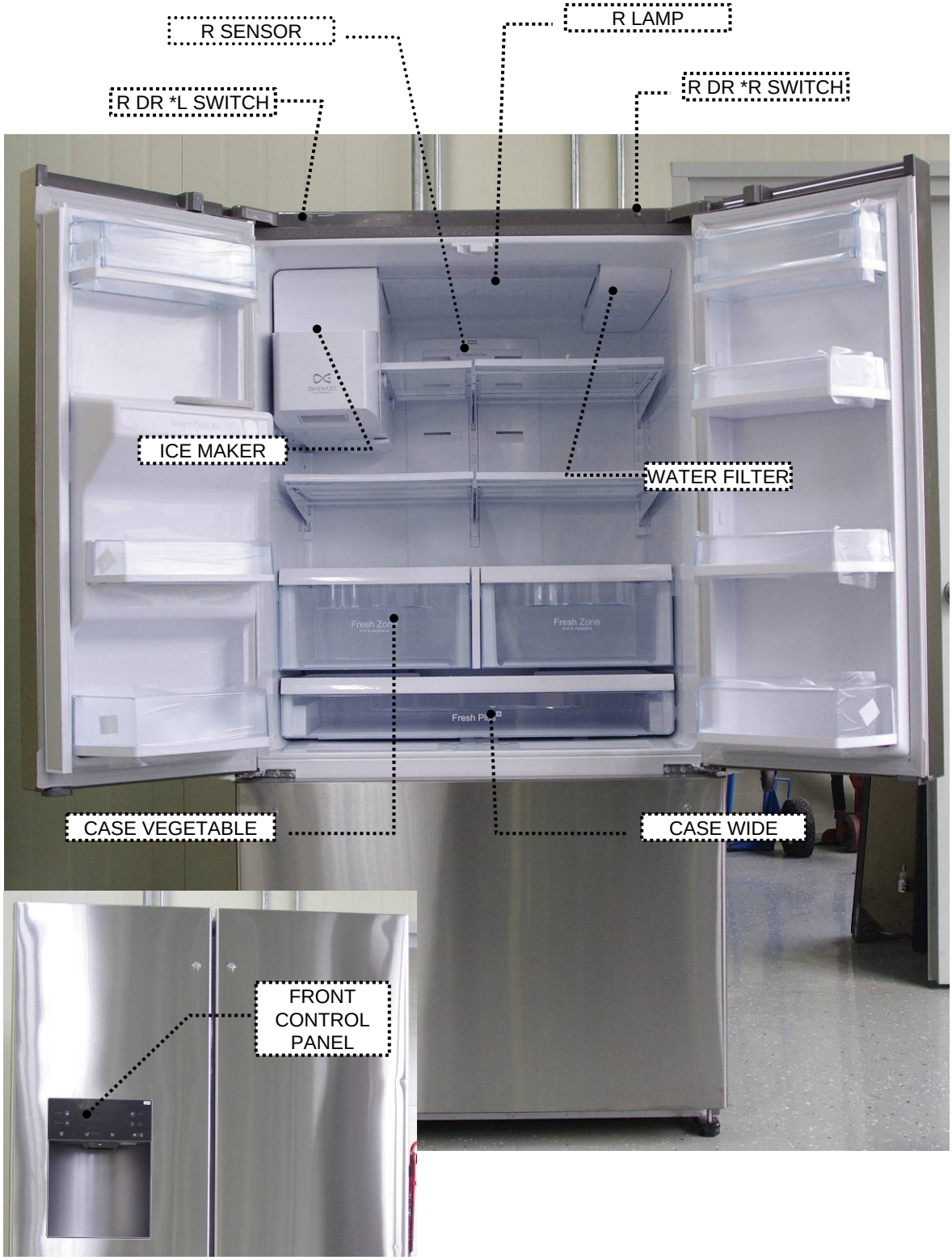

6-2. Freezer Compartment

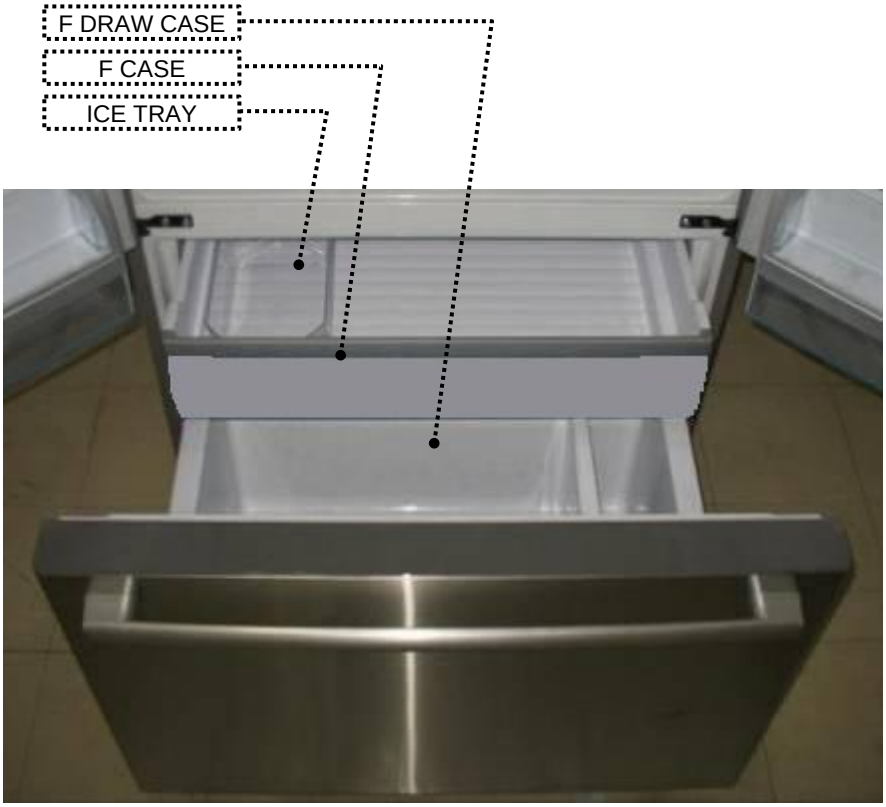

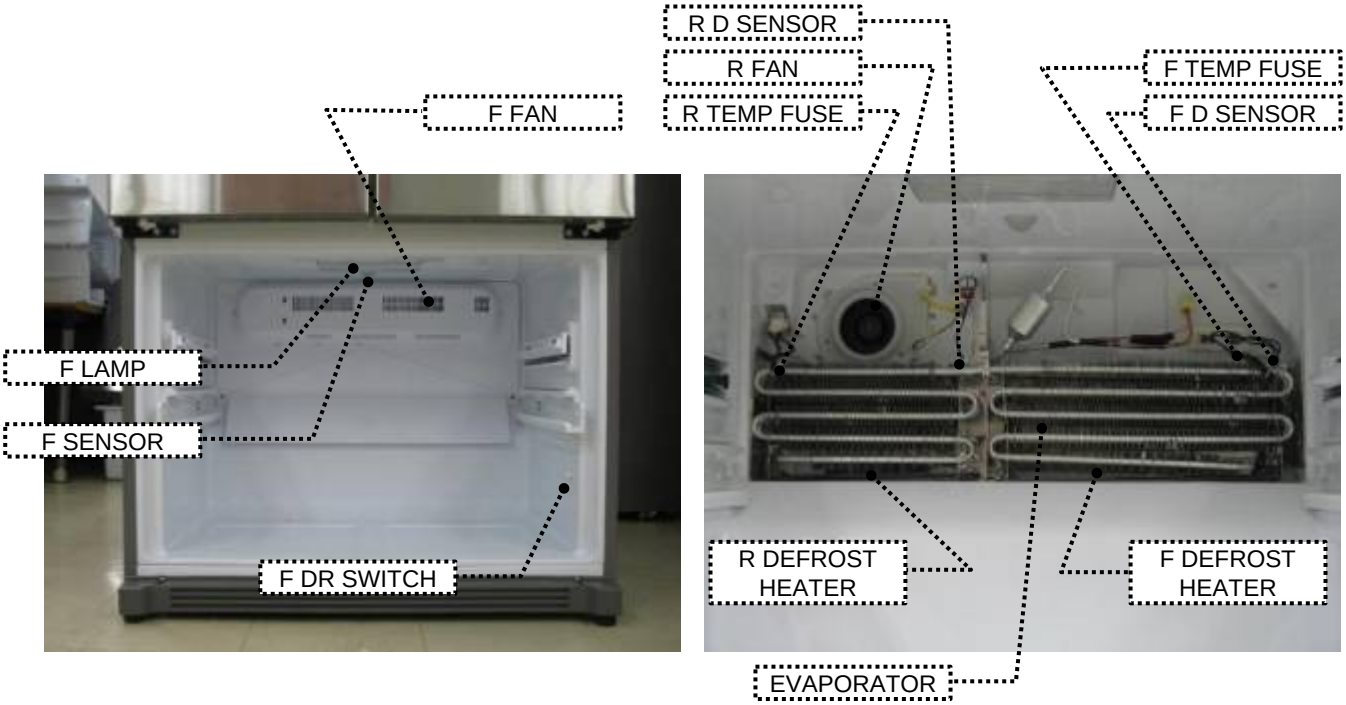

6-3. Automatic Ice Maker Compartment

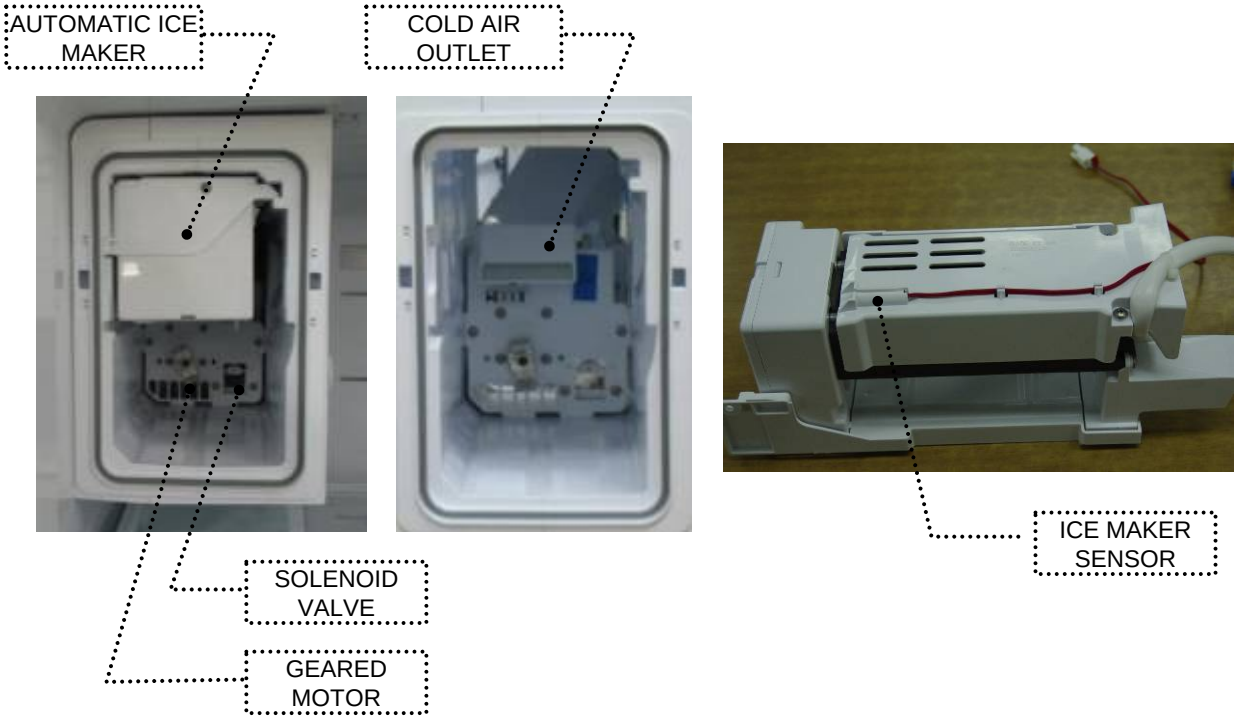

6-4. Machine Compartment

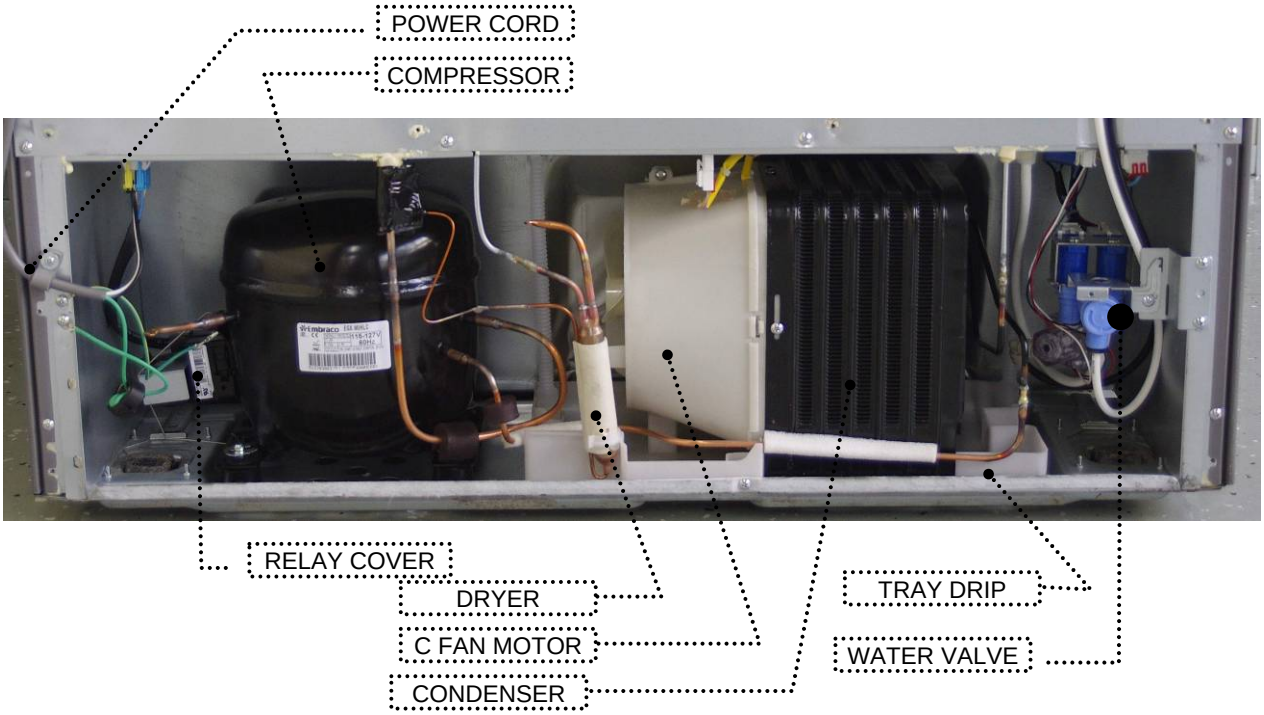

7. HOW TO CHECK EACH PARTS

7-1. Hose Ice Maker Tube Assembly

1) Disassembling Procedure

NO	DISASSEMBLING PROCEDURE	NO	DISASSEMBLING PROCEDURE
1	 ▷Pull forward Ice Storage Case	5	 ▷Remove 2 screws at the Cove Guide Cab W/Tube A.
2	 ▷ Pull forward Ice Maker	6	 ▷Disassemble Cover Guide Cab W/Tube A
3	 ▷Disconnect housing on the backside	7	 ▷Pull forward Hose Ice Maker Tube As.
4	 ▷Disconnect Water Hose Heater's housing.	8	 ▷Check Hose Ice Maker Tube As.

2) How to check Hose Ice Maker Tube As.

How to check	CRITERION
 ▷Measure the resistance of two wire	▷Good: 2420Ω(±8%) (2226 ~ 2614Ω) ▷If defective, change

7-2. Geared Motor Assembly

1) Disassembling Procedure

NO	DISASSEMBLING PROCEDURE	NO	DISASSEMBLING PROCEDURE
1	 ▷Disassemble Ice Maker.	4	
2	 ▷Unscrew (2 ea).and pull forward Geared Motor	5	
3	  ▷Check Solenoid Valve and Geared Motor.	6	

2) How to Check Geared Motor Assembly

PARTS	SPEC.	HOW TO CHECK	CRITERION
Geared Motor	▷SPEC. NAME :DAG-6502DESB :S6150XRI01 ▷VOLTAGE :120V,60Hz	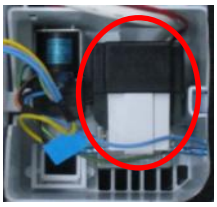 ▷Check resistance value of 2 terminals with a Multi Tester.	▷GOOD : 2.6Ω(±7%) : 2.3Ω(±7%) ▷DEFECTIVE ; Change the Geared Motor.
Cube Sol Valve	▷SPEC. NAME :Cube SN9 :SOL2004-01D ▷VOLTAGE :110/127V,50/60Hz :110/115V 60Hz	 ▷Check resistance value of 2 terminals with a Multi Tester.	▷GOOD : 42Ω(±10%) : 38Ω(±10%) ▷DEFECTIVE ; Change the Cube Sol Valve.

7-3. Dispenser Solenoid Valve

1) Disassembling Procedure

NO	DISASSEMBLING PROCEDURE	NO	DISASSEMBLING PROCEDURE
1	 ▷Unscrew (1ea) to remove F-PCB Panel.	4	 ▷Separate 2 terminals from Sol Valve and Housings from Cover Ice Flap.
2	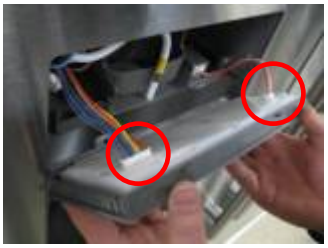 ▷ Separate 2 housings from Front PCB. (Do not hold only wires to pull out.)	5	 ▷Unscrew (2ea) to remove Sol Valve.
3	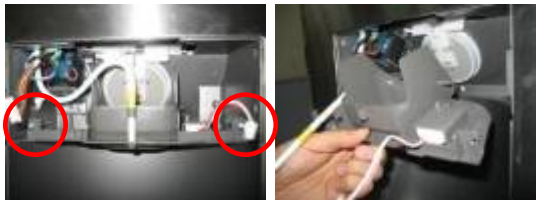 ▷Unscrew (2ea) to remove Box Dispenser Shut.	6	 ▷Unscrew (1 point) to remove Cover Ice Flap.

2) How to Check Sol Valve & Flap Heater

PARTS	SPEC.	HOW TO CHECK	CRITERION
Dispenser Sol Valve	▷SPEC. NAME :SOL2003-02D ▷VOLTAGE :110/115V,60Hz	 ▷Check resistance value of both terminals with a tester.	▷ Good : 49Ω(±10%) (44.1~53.9Ω) ▷DEFECTIVE : 0 Change Sol Valve.
Flap Heater Assembly	▷VOLTAGE :DC 12V, 2W	 ▷Check resistance value of both terminals with a tester.	▷GOOD : 72Ω(±8%) (66.2 ~ 77.8Ω) ▷DEFECTIVE ; Change Flap Heater AS.

7-4. Main PCB

■ Model : FRS-701DTU

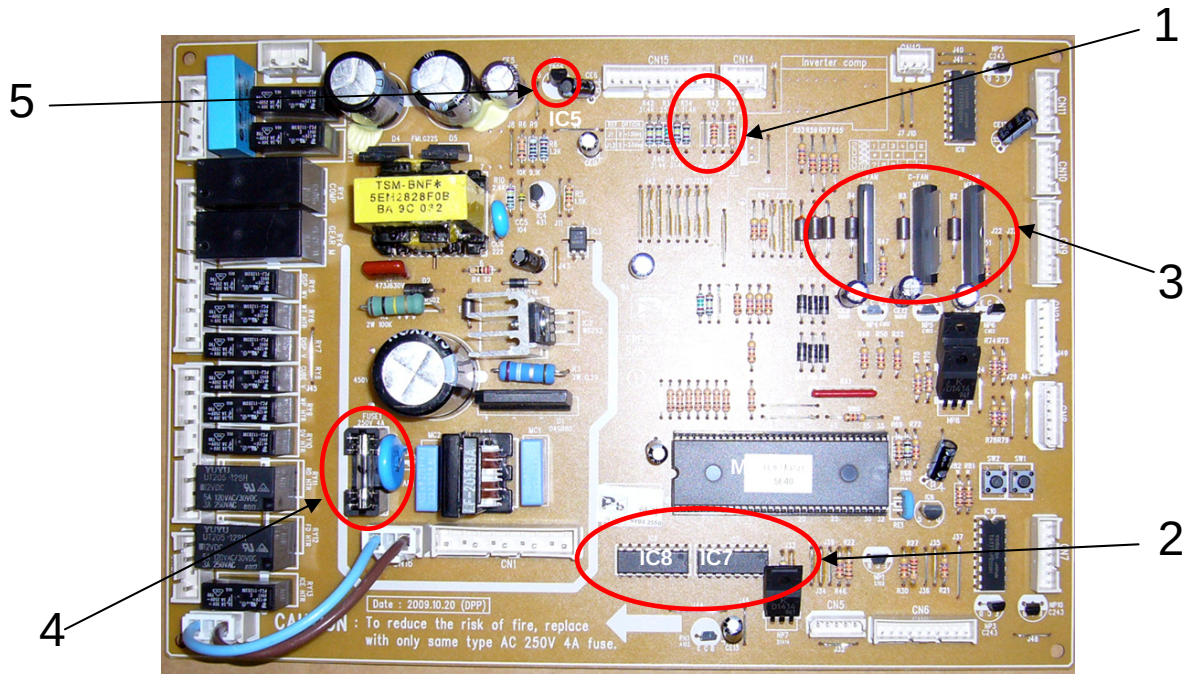

No	Item	Check Point	Remark
1	Compensation for weak refrigeration →Making R-temp cooler	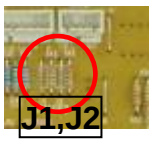 * Used when making R-temp. down to compensate for weak refrigeration without changing FCP temp. setting. ※Cutting of J1 ⇒ down by 1.5 ℃ ※Cutting of J1, J2 ⇒ down by 3℃	
2	Relay Power Controller	* To check normal voltage of each electrical devices to & from MICOM. ▷Check input & output voltage of MICOM and IC7, 8.	
3	Fan Power Controller	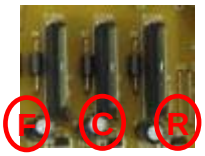 * To check input & output voltage of Fan  ▷#2 : Output ▷#5 : Input	
4	Electric Current Fuse	* To check when each device does not work (250V,4A)	
5	Regulator IC(5V)	* To check voltage of MICOM and IC Voltage check of IC5 (Input :12V,Output : 5V)	

7-5. Ice Maker

1) Disassembling procedure

No	Disassembling procedure	NO	Disassembling procedure
1	  ▷ Remove Window R Lamp and 2 screws on top inner surface of R room.	6	 ▷Disassemble Housing(4ea).
2	  ▷ Disassemble Base F Lamp & PCB housing..	7	 ▷Unscrew (1 ea) on side inner left surface of Box Ice Maker.
3	  ▷Remove Cover Bracker on side of Ice Maker.	8	 ▷ Pull Forward and Remove Ice Maker AS. Attention on back side wires.
4	  ▷Remove 4 screw on side of Ice Maker & top of Line. And remove Bracket I/BOX *T	9	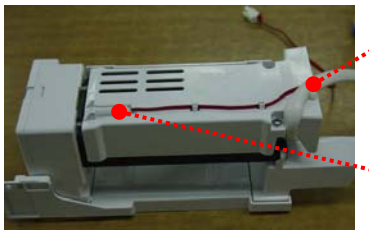 ▷Remove 1 Cable tie on ice sensor. And remove ice sensor from Ice Maker.
5	  ▷ Push Lock I/Crusher B and pull forward Case I/Crusher AS and separate Case I/Crusher AS from Box I/Maker AS.		

* Follow the reverse order when assembling.

2) How to check ice maker

Parts	How to check	Criterion
Ice Maker AS	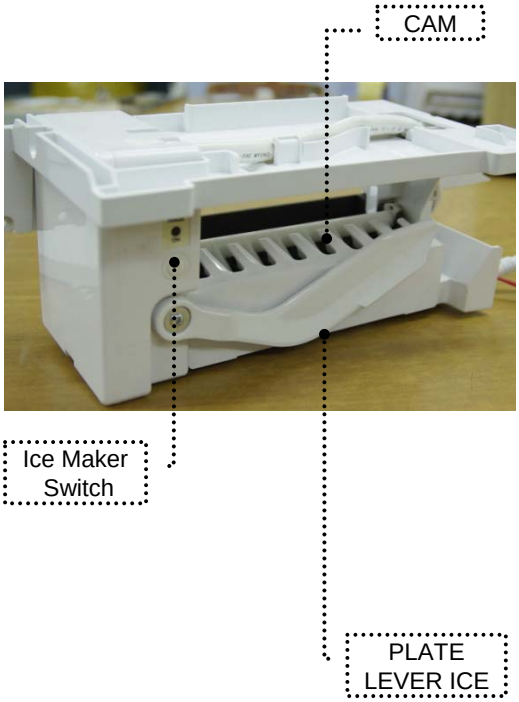	▷ GOOD : PLATE operated up and down 1 time by rotation of the CAM when pushing the button ▷ DEFECTIVE : all situations except upper

8. TROUBLE DIAGNOSIS

8-1. Faulty Start (F/R lights OFF , F-PCB Power OFF)

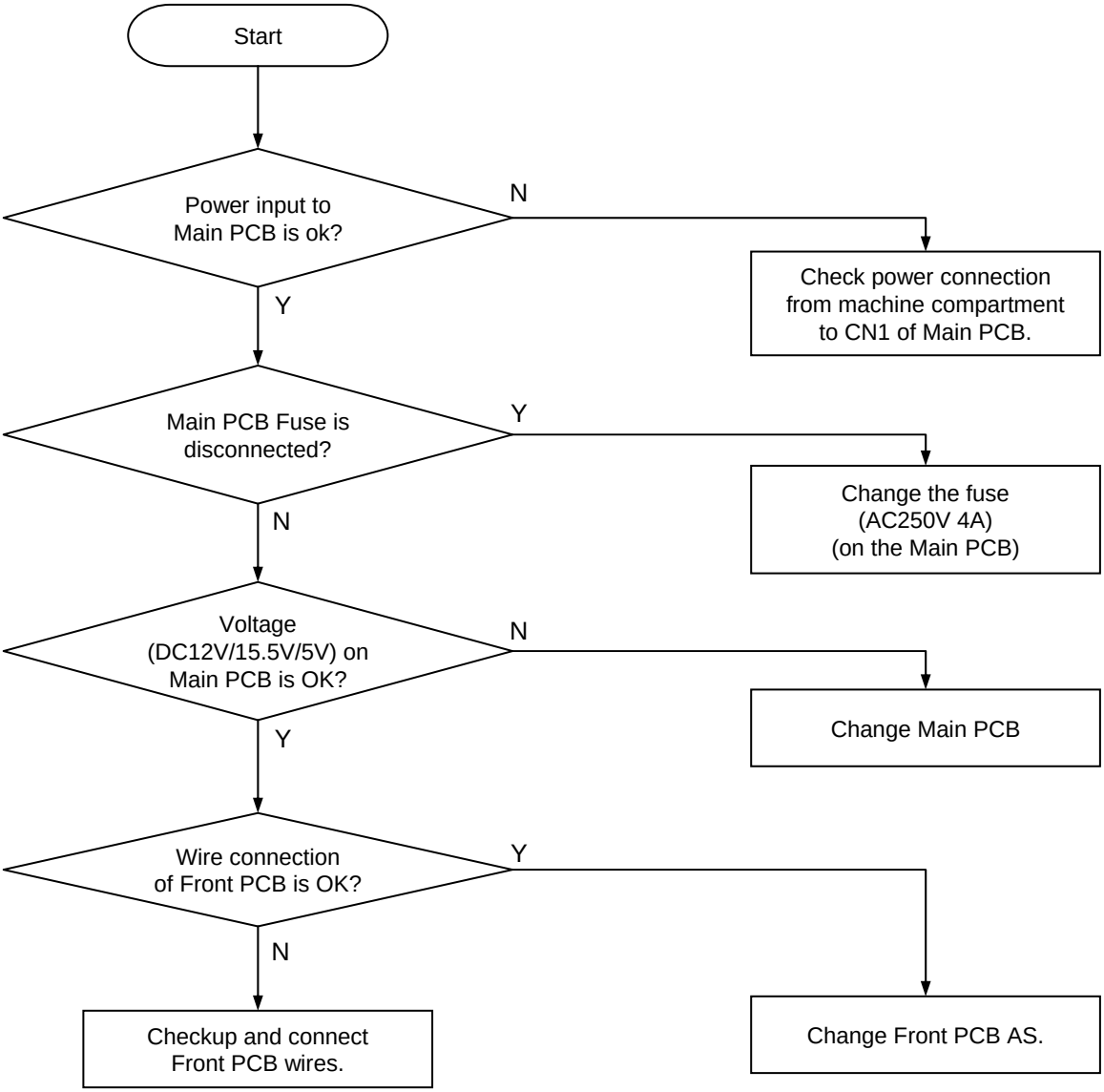

※ How to disassemble Front PCB Ass'y

1)  2)  3) 

1) Unscrew (1 points) to remove Front PCB.
2) Pull out 2 connector (8pin & 2pin) from Front PCB Ass'y. (Do not hold only wires to pull out.)
3) Unscrew (5 points) to remove Front PCB.
* Follow the reverse order when assembling.

8-2. Freezer Compartment

8-2-1. Freezing failure . (Foods are not frozen / cold.)

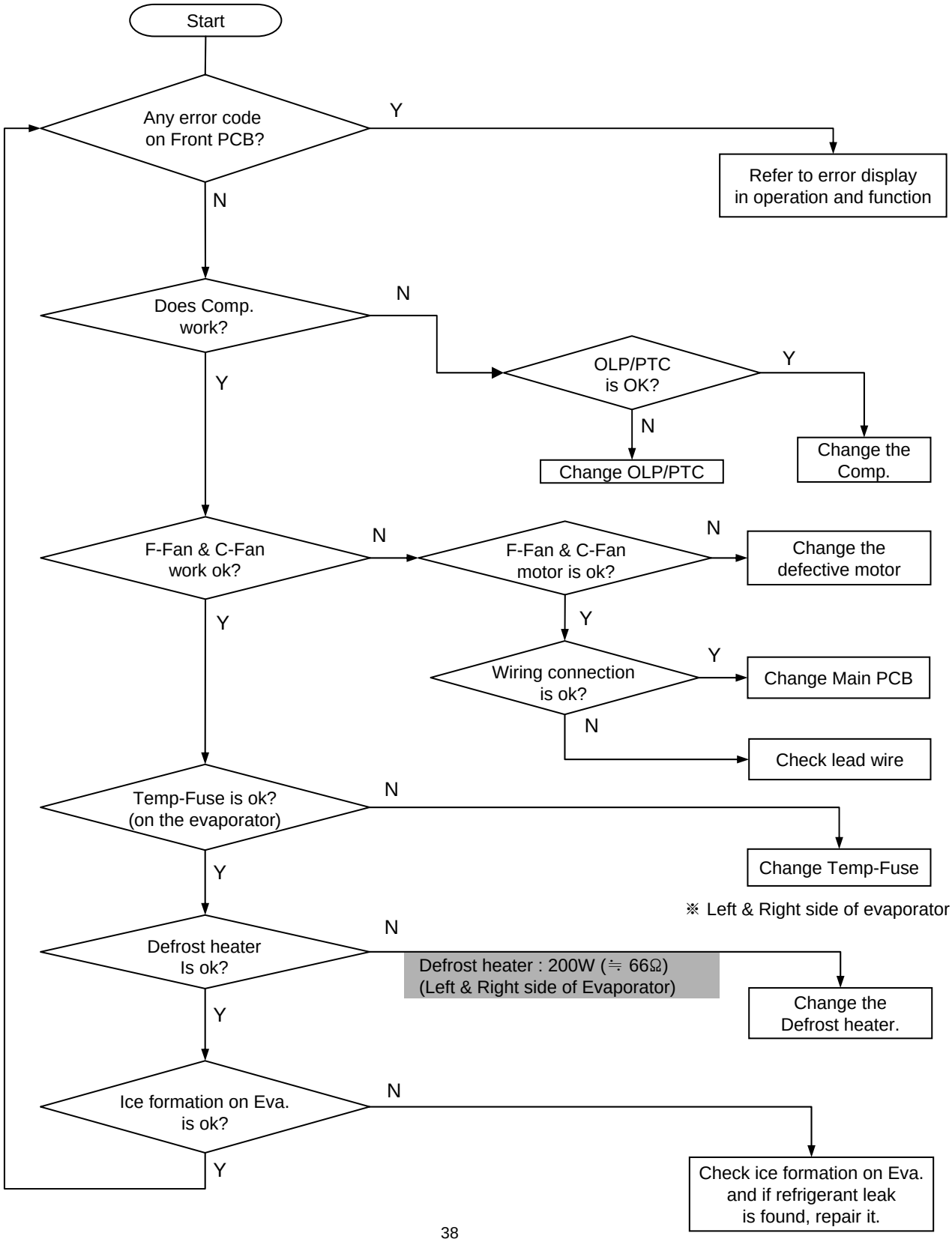

Removing and replacing Freezer parts

1) Disassembling F Door procedure

(1) Remove foods.
(2) Remove F Draw Case & F Case in freezer compartment.

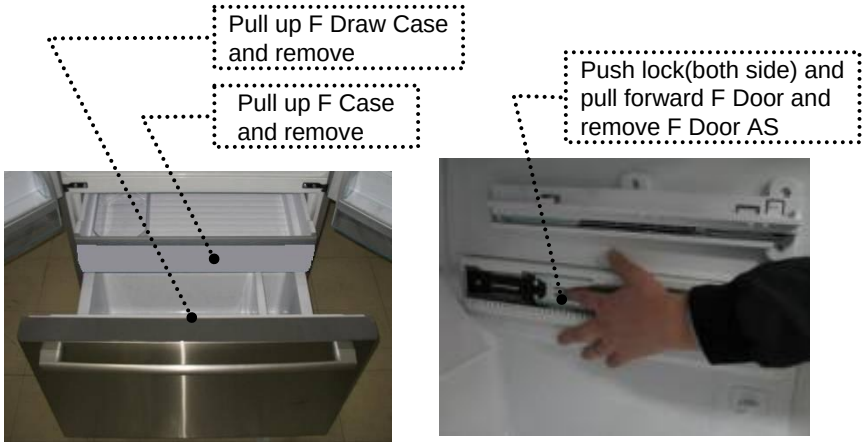

2) Assembling F Door procedure



1. Align end of rail(both side) with Supporter F Draw Rail
2. Fully push & close F Door. And check locking rail with lock of supporter

※ Up to this time, Fixture Rail Gear(steel stick) & gear Rail M have not to be assembled.

3. Fully open F door.
4. Assemble one Gear Rail M in Supporter F Rail Gear.
5. Push and assemble another one Gear Rail M on opposite side of rail.

※ Check both side Gap of Door & Cabinet.





Removing and replacing Freezer parts

3) Disassembling F Louver AS procedure



* Remove the screw cap (2ea) on the F-Louver A with a flat tip driver.



* Remove Screws (2ea) of F-Louver A.



* Pull forward top of F Louver.



* Disassemble housing



* Separate F Louver AS.

4) Disassembling F Fan AS procedure



* Remove the screw (3ea) of Fixture F Motor A.



* Separate Fixture F Motor A

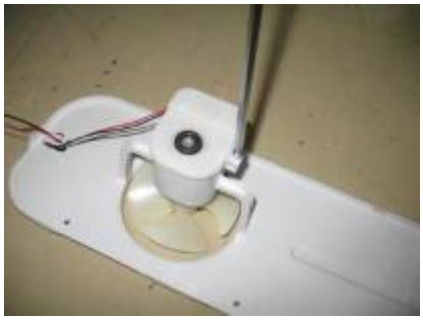

* Remove the screw (1ea) of Cover Fan Motor.



* Separate Cover Fan Motor.



* Strongly pull out Fan Blade and remove. And separate Motor.

Removing and replacing Freezer parts

5) Disassembling R Fan AS procedure

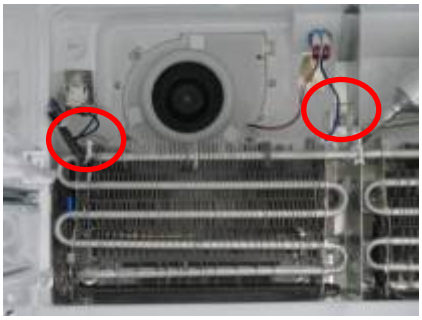

* Remove screws(2ea) of Eva.



* Remove screws(3ea) of Fixture R Motor B.



* Remove Housing R Fan AS.



* Pull forward R Fan AS.



* Separate R Fan AS.



6) Disassembling EVA AS & Accessory procedure

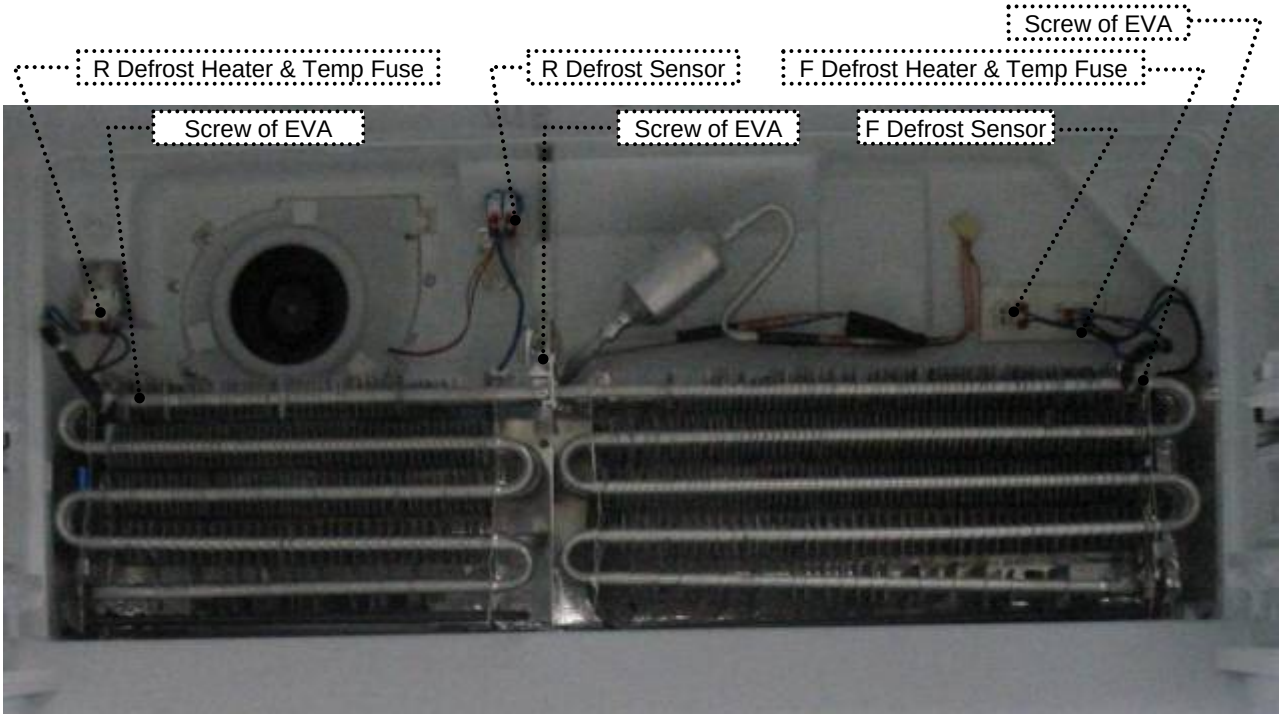

8-2-2. Ice Formation on F-Louver

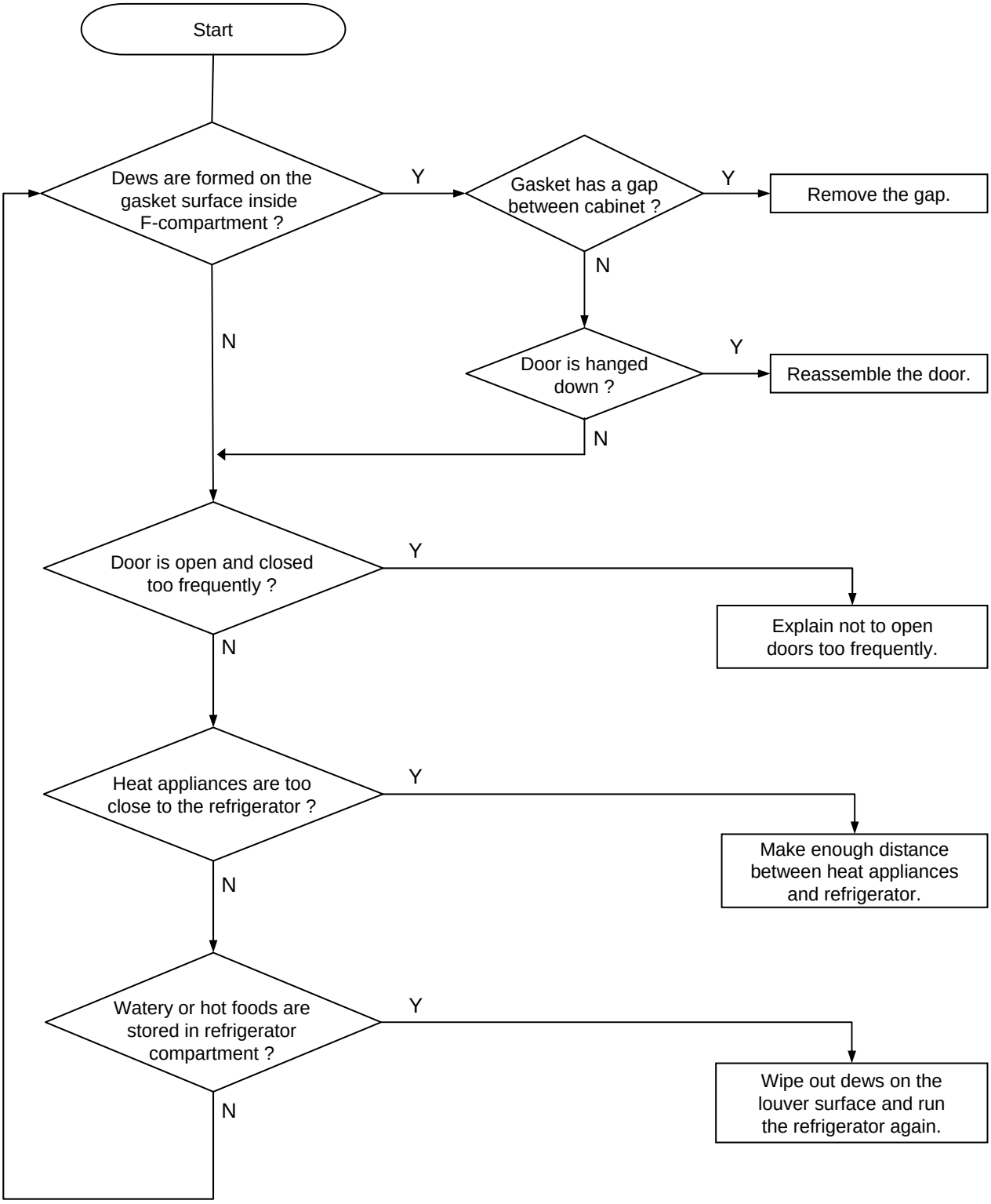

8-2-3. Disconnection / breaking of Freezer Lights Ass'y

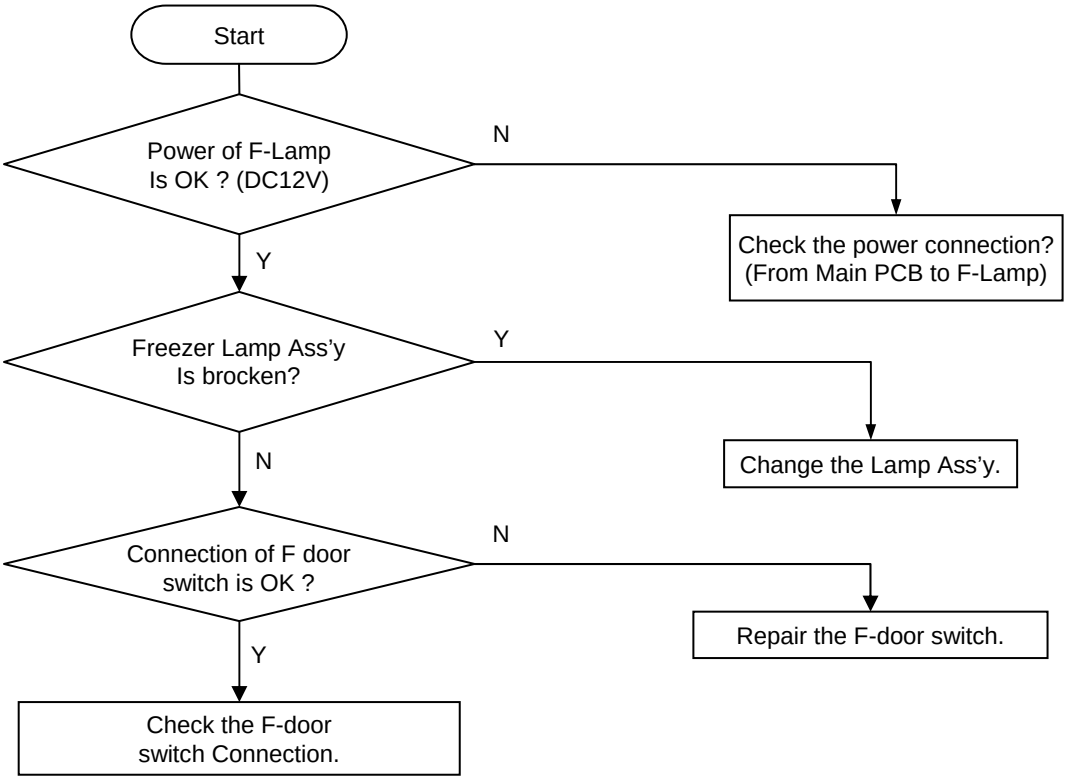

Change of F Lights

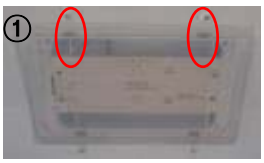

* Remove 2 screws of light cover.



* Unscrew 2 points.



* Pull out connector from F-Lamp Ass'y.



* Check the power of F-Lamp connector (DC 12V)

Change of F Door Switch

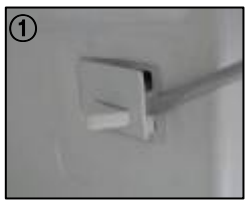

* Insert a flat tip screw driver Into a gap of door switch to pull forward.



* Disconnect the housing and change the switch for a new one.

※ Follow the reverse order of disassembling after changing the switch.

8-3. Refrigerator Compartment

8-3-1. Refrigeration failure (Foods does not get cool or cold soon.)

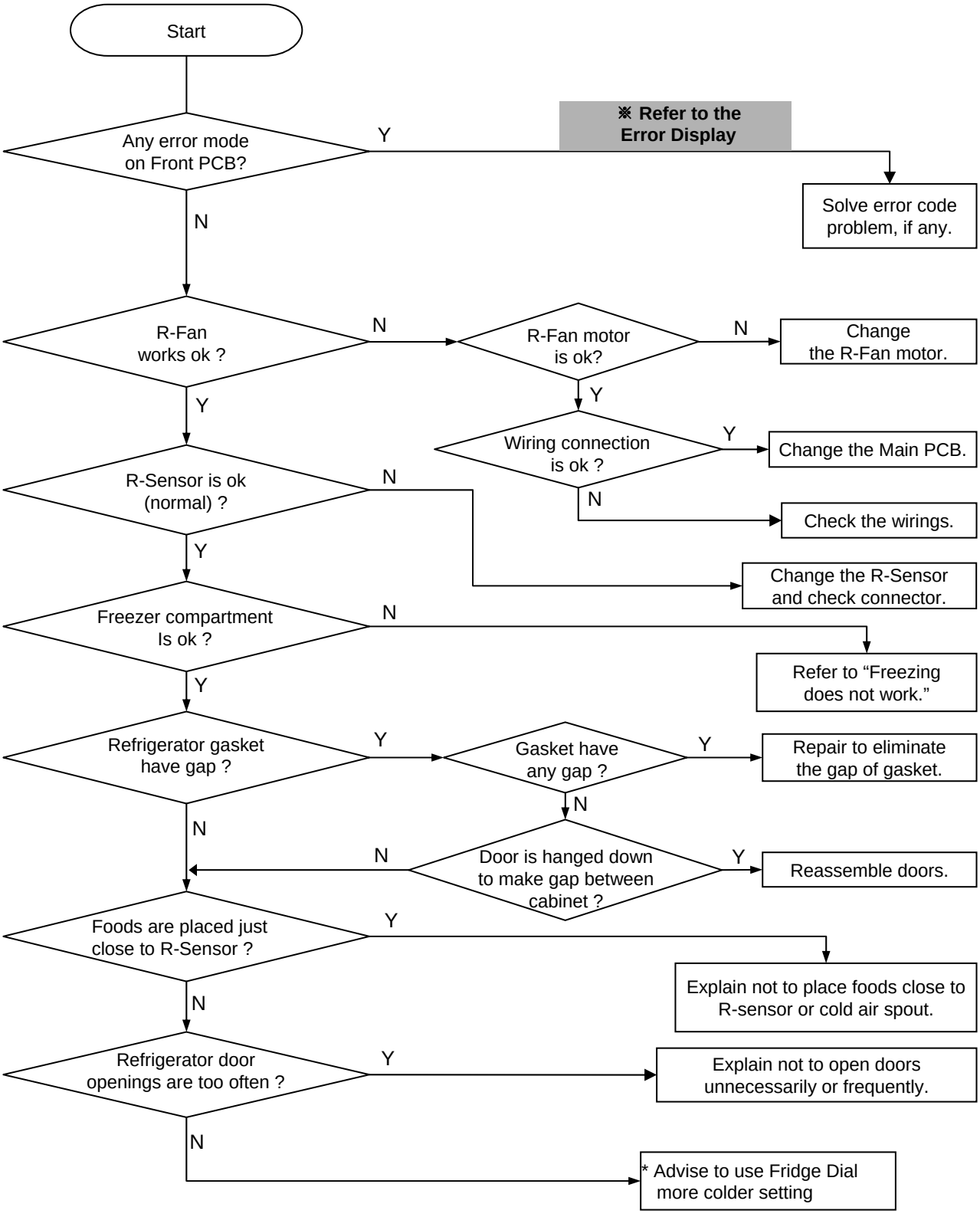

Removing and replacing Refrigerator parts

1) Disassembling R Door procedure





* Remove Screws (1ea) of clip and remove the clip.



* Disconnect housing and water hose.



* Remove Bolt(1ea) of Hinge *T and remove the Hinge *T.



* Pull up the door and remove the door.

2) Disassembling Multi-Duct procedure



* Remove Cap Screws *T by '-' driver.

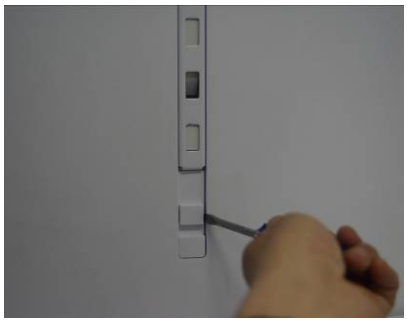

* Remove Cap Screws *U by '-' driver.



* Remove Screws(2ea).



* Pull forward top of Multi Duct AS .



* Disconnect housings .



Removing and replacing Refrigerator parts

2) Disassembling Multi-Duct procedure

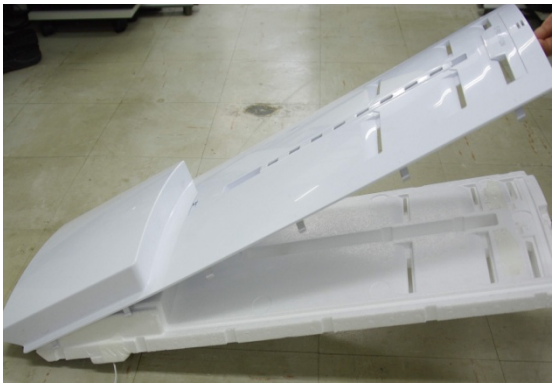

* Separate Cover Multi Duct with Insulator.

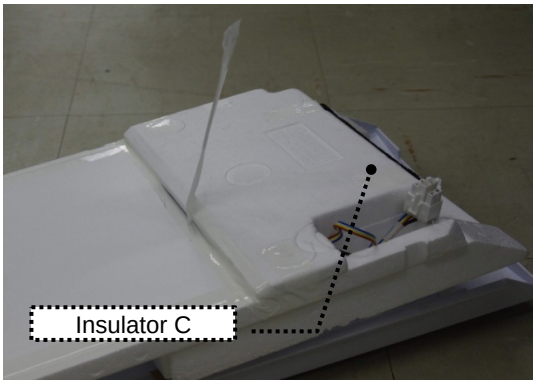

* Remove tape.

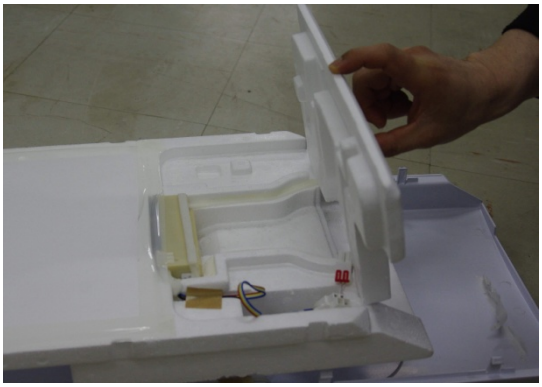

* Separate Insulator C.



* Separate Insulator D.

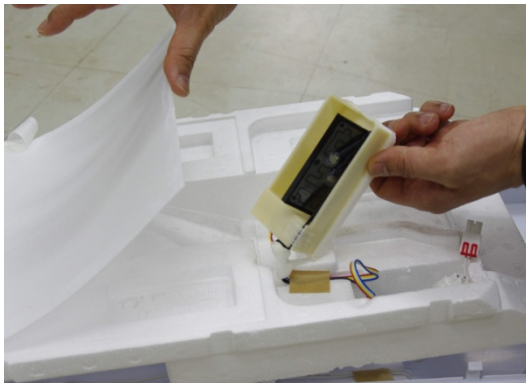

* Separate Damper



* Sensor for R Room.

8-3-2. Disconnection / Breaking of Refrigerator Lights Wires

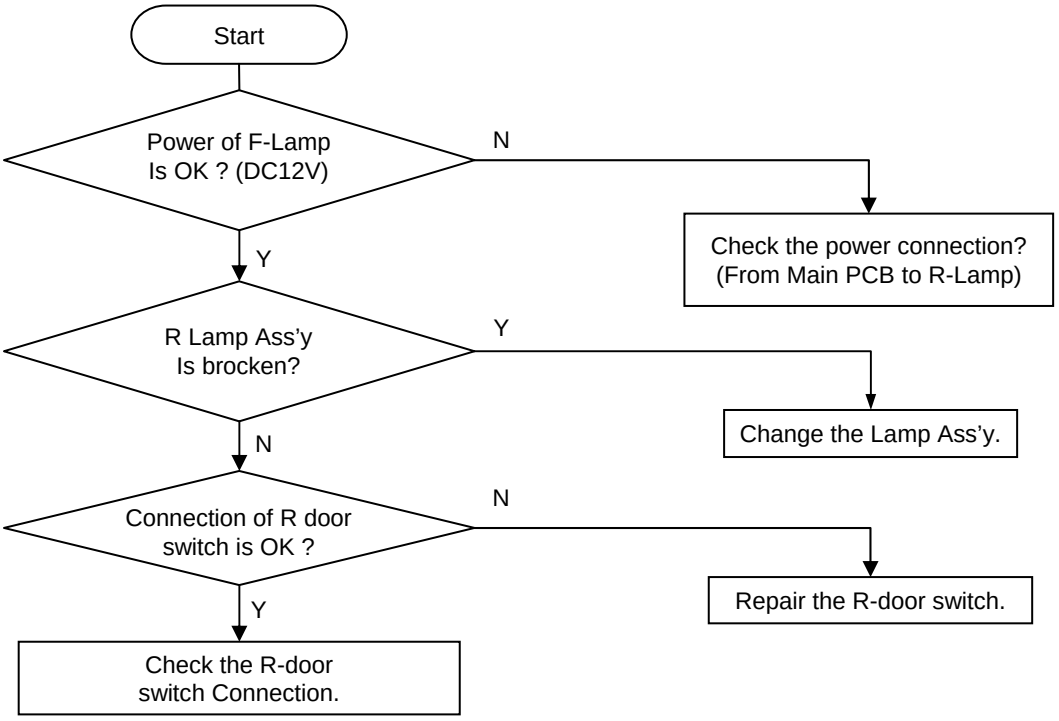

Change of R Lights



* Remove the Water Filter cover



* Unscrew 2 points.



* Pull out connector from R-Lamp Ass'y.



* Check the power of R-Lamp connector (DC 12V)

Change of R Door Switch



* Unscrew 5 points.







* Pull out the connector and change the switch for a new one.

※ Follow the reverse order of disassembling after changing the switch.

8-3-3. Dews on Refrigerator Compartment

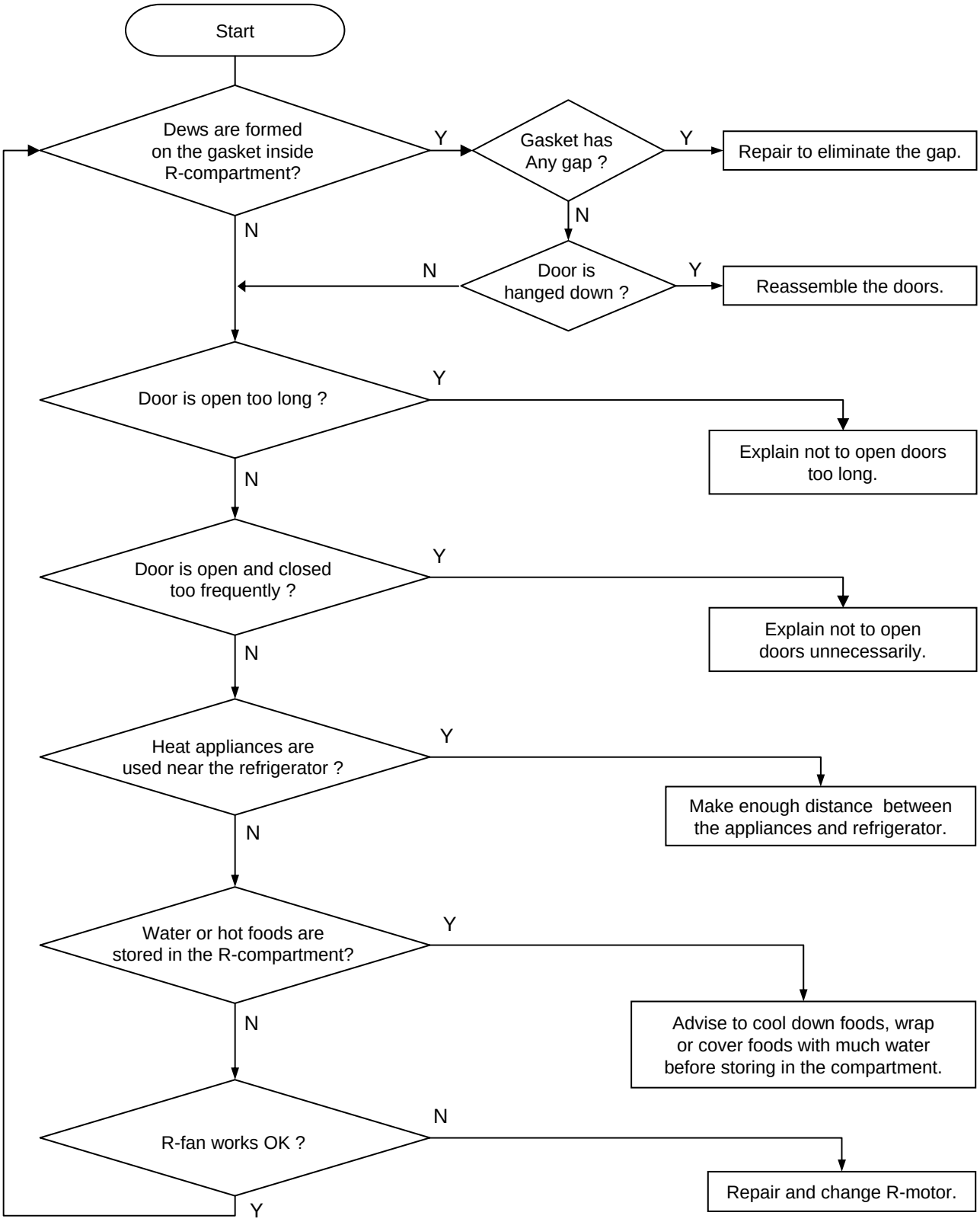

8-4. Operation Noise of Refrigerator

8-4-1. Comp. operation Noise

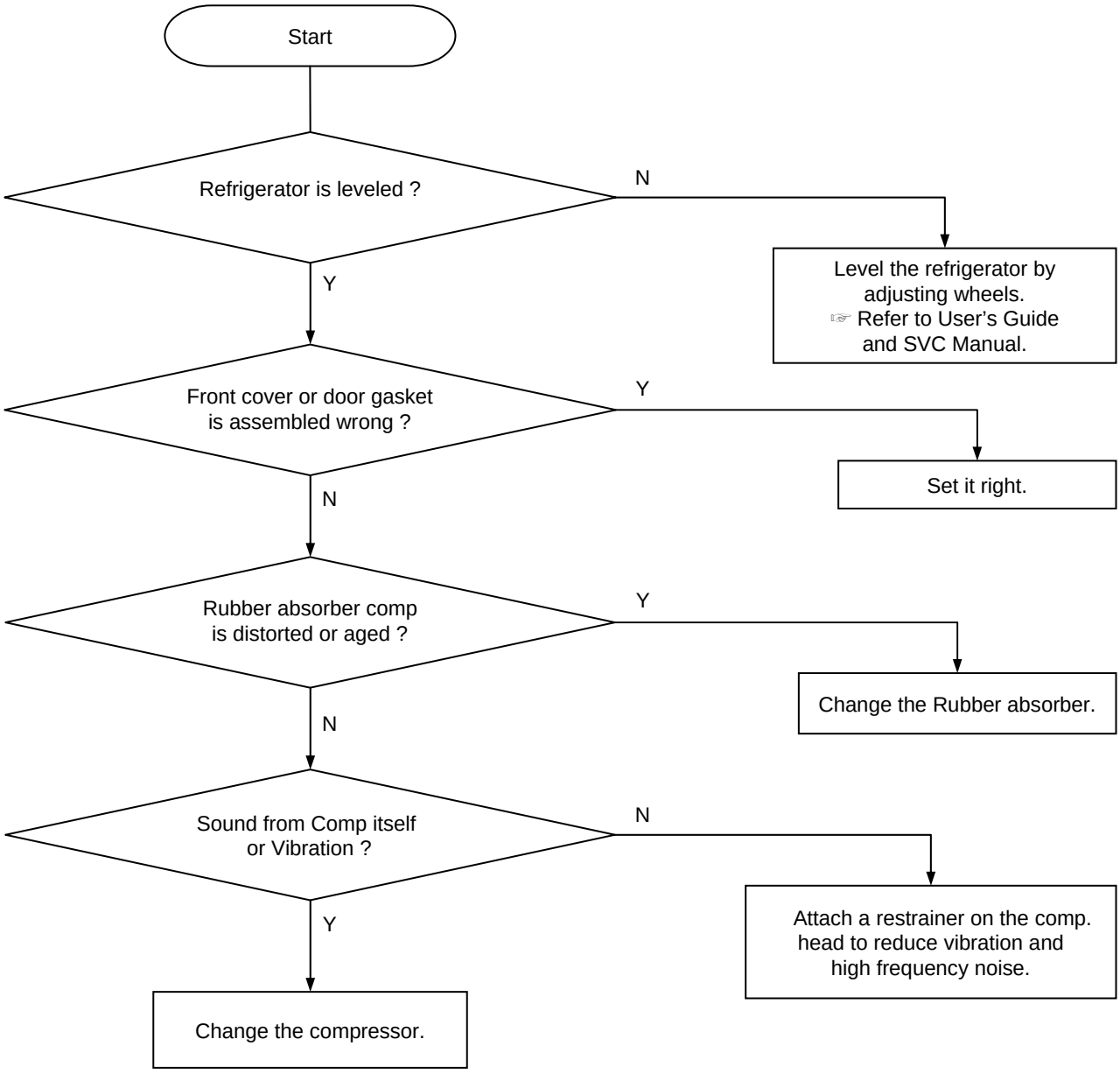

Remarks
● Compressor sound is somewhat normal because it works like a heart to circulate the refrigerant in the pipes during the refrigerator operation. ● Rattling or metallic touch sound of motor, piston of comp. can be heard when it starts or stops.

8-4-2. Refrigerant Flow Sound

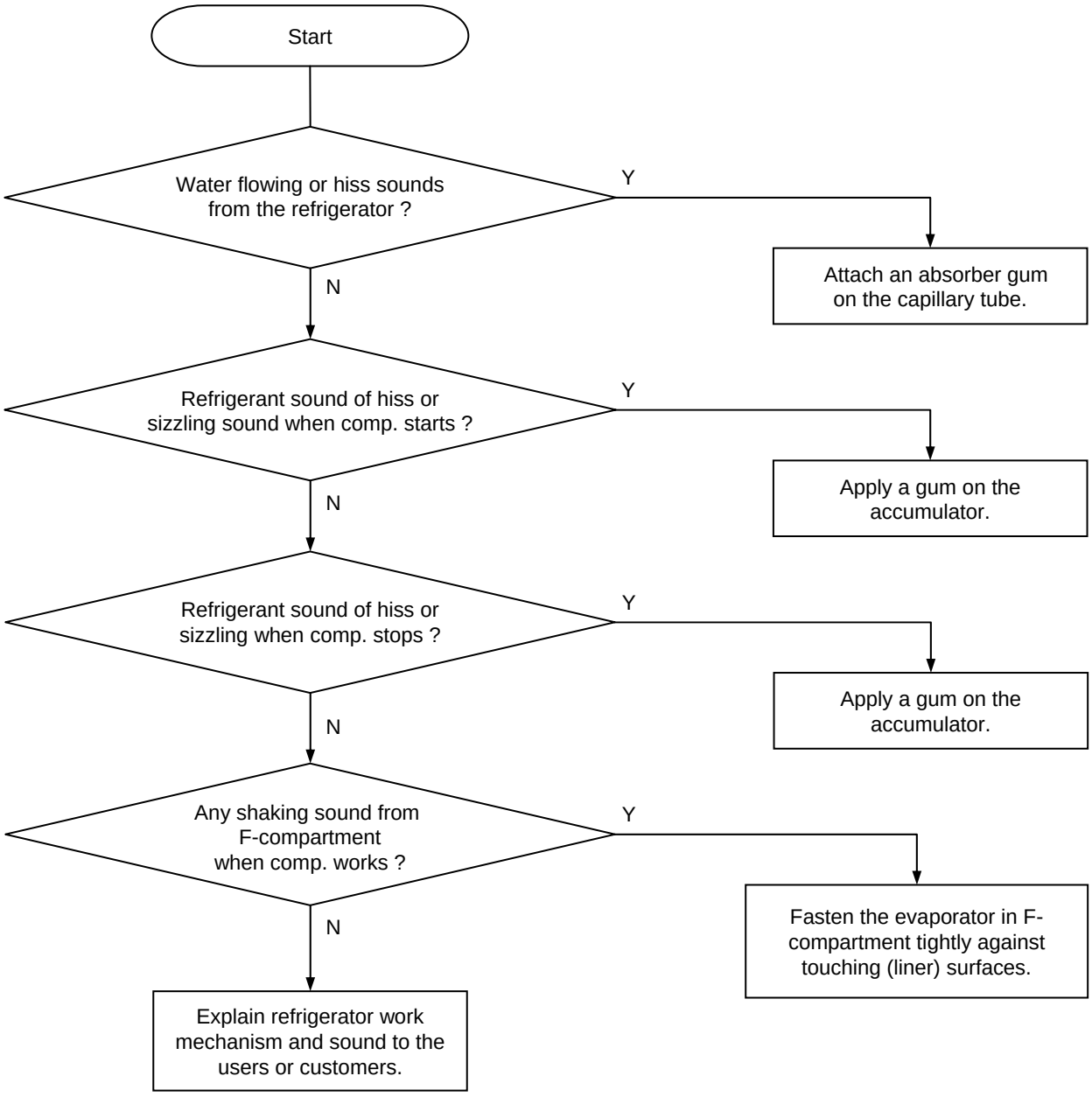

Remarks

● Water flowing sound, hiss or sizzling sound can make while refrigerant in the pipes is changing from liquid to gas state when comp. starts or stops.
It is normal to the refrigerator.

Troubleshooting of Evaporator Sound

1. Hiss Sound from Capillary Tube

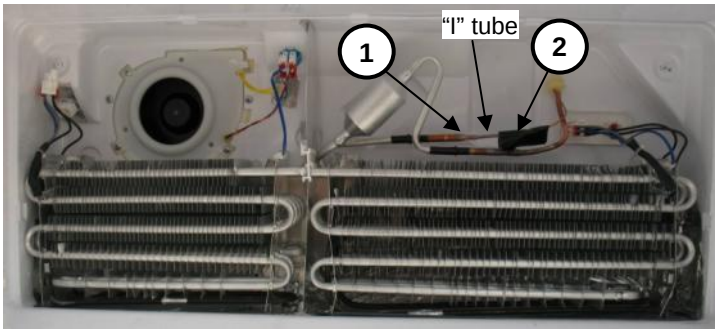

1) "I" tube is used to connect the capillary tube and evaporator. (2 welding points : ①, ②)

2) When such a sound is made, attach a absorber on the tube including 2 welding points.

2. Shaking or trembling Sound of Evaporator

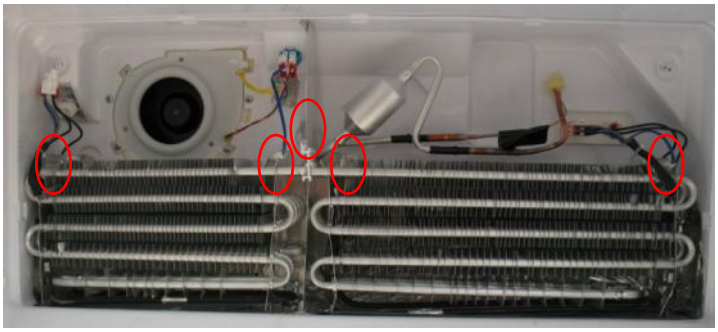

1) Check whether evaporator is fastened tight with the screws of 5 points.

8-4-3. Fan Noise

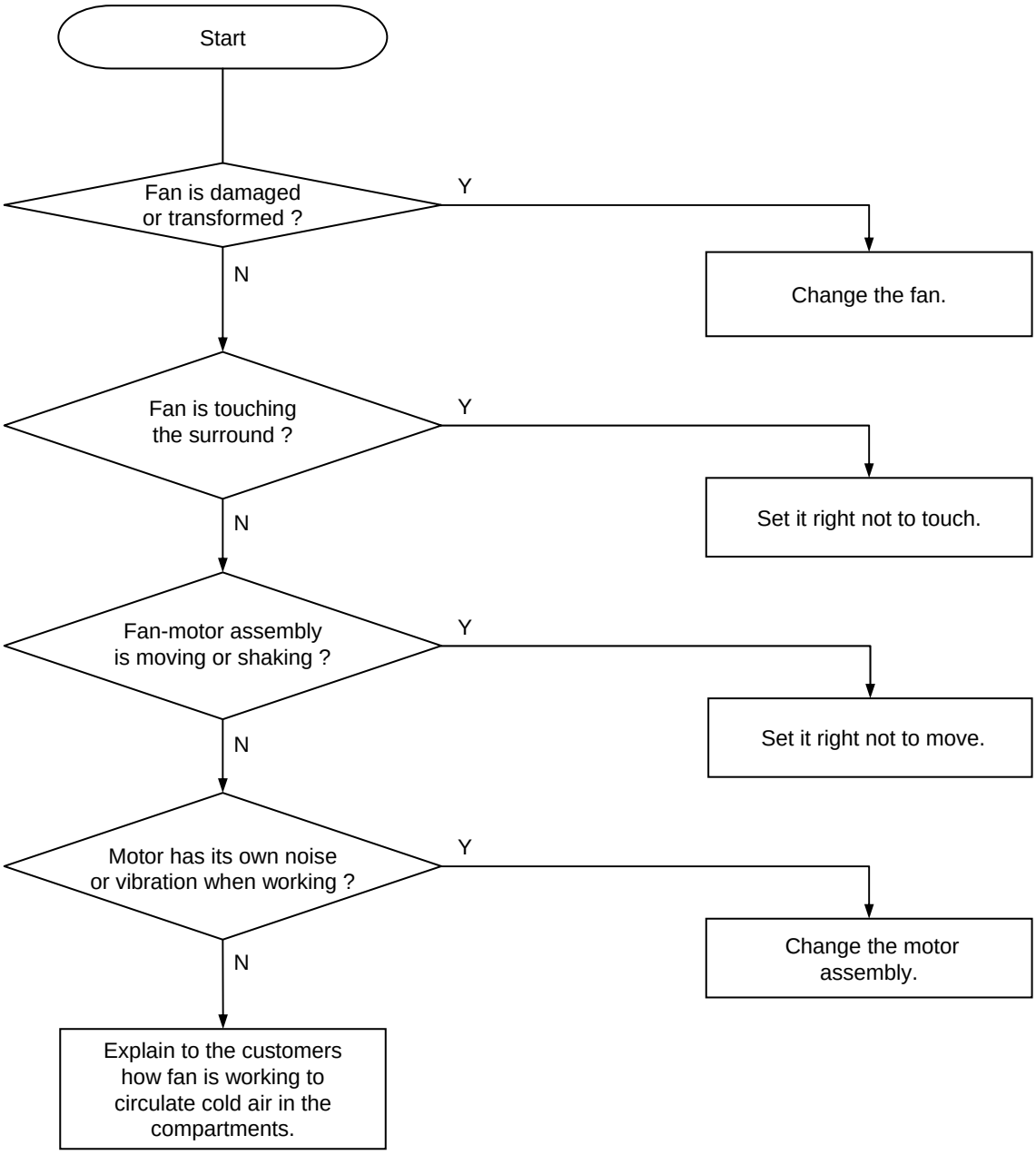

Remarks

● The fan is sending out cold air to circulate it through the compartments.
When the air is touching the surface of louver or liner wall, such sound can make.

8-4-4. Pipe Noise

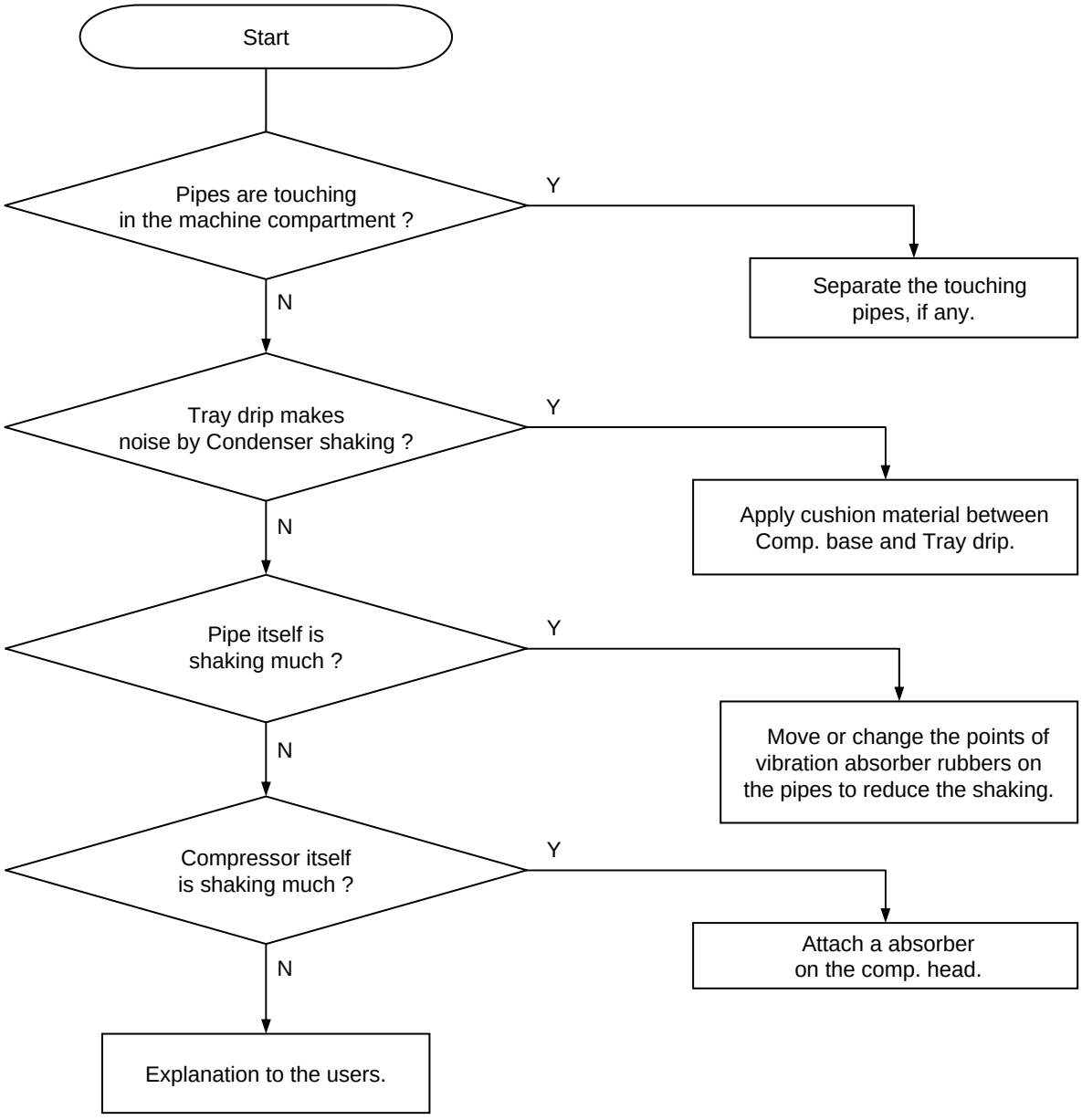

Remarks

- Refrigerant is erupting rapidly from the compressor to circulate pipes, so pipe shaking noise can make to some degree.
- In case compressor vibration is sent to a pipe directly, apply vibration absorber rubbers to welding points of the pipe and comp. or to a much bent point on the pipe.

8-5. Door

8-5-1. Door Opening Alarm Continues though the door is closed.

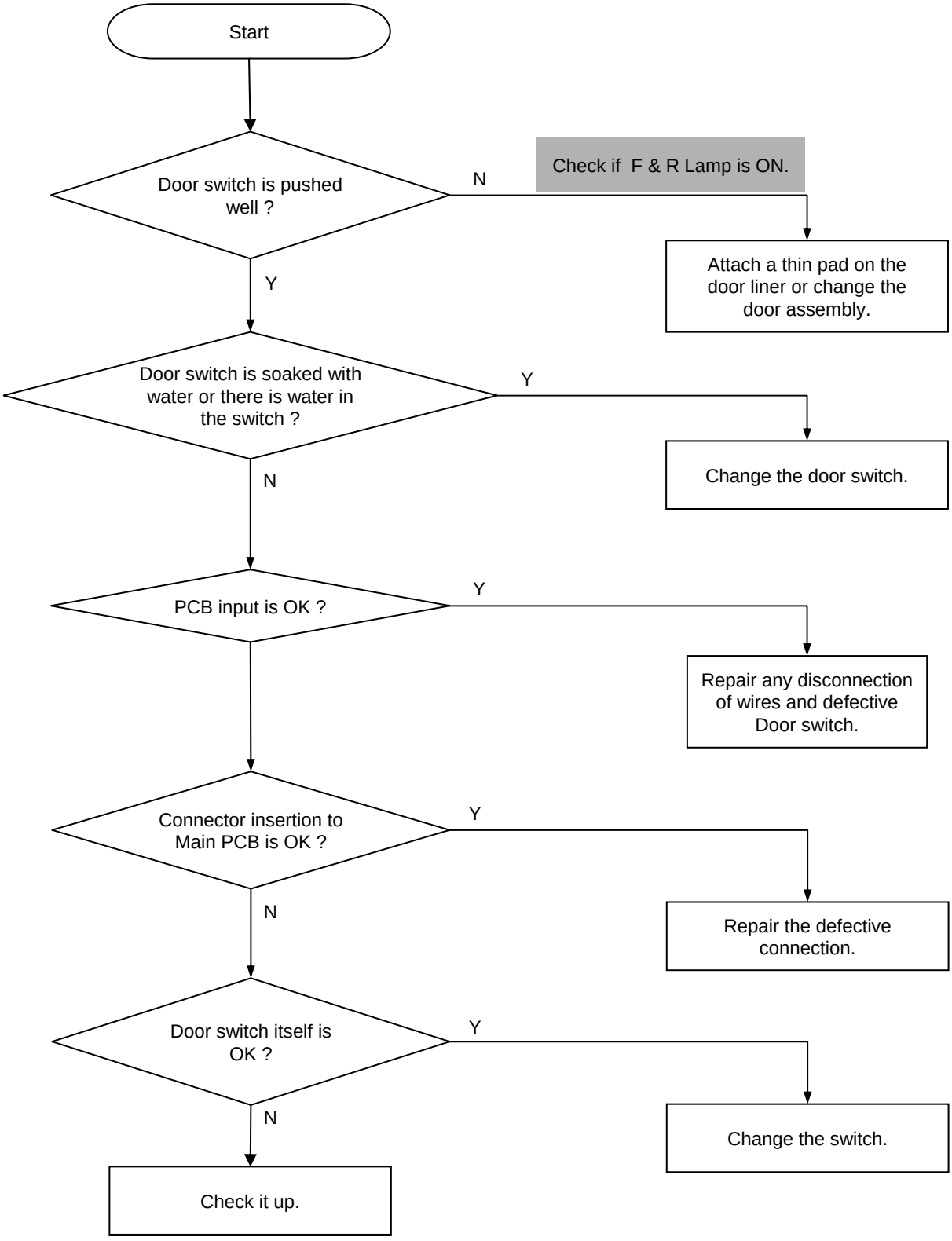

9. COOLING CYCLE HEAVY REPAIR

9-1. Summary of Heavy Repair

Process	Contents	Tools
Remove refrigerant Residuals	* Cut charging pipe ends (Comp. & Dryer) and discharge refrigerant from dryer and compressor.	* Nipper, side cutters
Parts replacement and welding	* Confirm refrigerant (R-134a or R-600a) and oil for compressor and dryer. * Confirm N2 sealing and packing conditions before use. Use good one for welding and assembly. * Weld under nitrogen gas atmosphere. * Repair in a clean and dry place.	* Pipe Cutter, Gas welder, N2 gas
Vacuum	* Evacuate for more than forty minutes after connecting manifold gauge hose and vacuum pump to high (dryer) and low (compressor) pressure sides.	* Vacuum pump , Manifold gauge.
Refrigerant charging and charging inlet welding	* Weigh and control the bombe in a vacuum conditions with electronic scales and charge through compressor inlet (Process tube). * Charge while refrigerator operates. * Weld carefully after inlet pinching.	* Bombe (mass cylinder), refrigerant manifold gauge, electronic scales, punching off flier, gas welding machine
Check refrigerant leak and cooling capacity	* Check leak at weld joints. Note :Do not use soapy water for check. * Check cooling capacity → Check condenser manually to see if warm. → Check hot pipe manually to see if warm. → Check frost formation on the whole surface of the evaporator.	* Electronic Leak Detector, Driver.
Compressor compartment and tools arrangement	* Remove flux from the silver weld joints with soft brusher wet rag. (Flux may be the cause of corrosion and leaks.) *Clean tools and store them in a clean tool box or in their place.	* Copper brush, Rag, Tool box
Transportation and installation	* Installation should be conducted in accordance with the standard installation procedure. (Leave space of more than 5 cm from the wall for compressor compartment cooling fan mounted model.)	

9-2. Precautions During Heavy Repair

Items	Precautions
Use of tools.	1) Use special parts and tools for R-134a or R-600a
Removal of retained refrigerant.	1) Remove retained refrigerant more than 5 minutes after turning off a refrigerator. (If not, oil will leak inside.) 2) Remove retained refrigerant by cutting first high pressure side (dryer part) with a nipper and then cut low pressure side. (If the order is not observed, oil leak will happen.) 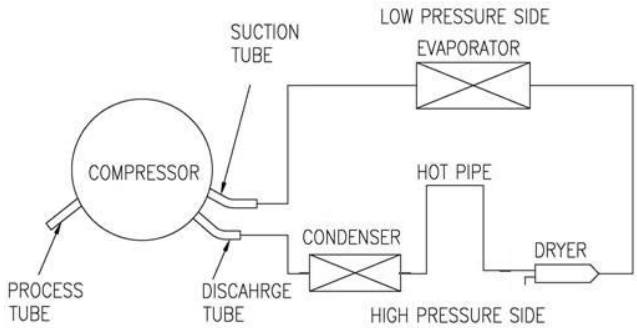
Replacement of dryer.	1) Be sure to replace dryer when repairing pipes and injecting refrigerant.
Nitrogen blowing welding.	1) Weld under nitrogen atmosphere in order to prevent oxidation inside a pipe. (Nitrogen pressure : 0.1~0.2 kg/cm2.)
Others.	1) Nitrogen only should be used when cleaning inside of cycle pipes inside and sealing. 2) Check leakage with an electronic leakage tester. 3) Be sure to use a pipe cutter when cutting pipes. 4) Be careful not the water let intrude into the inside of the cycle.

9-3. Practical Work for Heavy Repair

Items	Precautions
1. Removal of residual refrigerant.	1) Remove residual refrigerant more than 5 minutes later after turning off the refrigerator. (If not, compressor oil may leak inside.) 2) Remove retained refrigerant slowly by cutting first high pressure side (dryer part) with a nipper and then cut low pressure side. 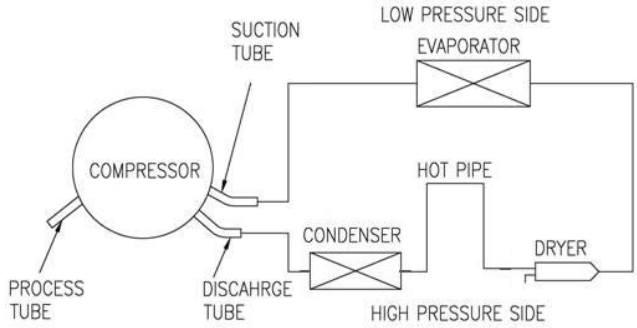
2. Nitrogen blowing welding.	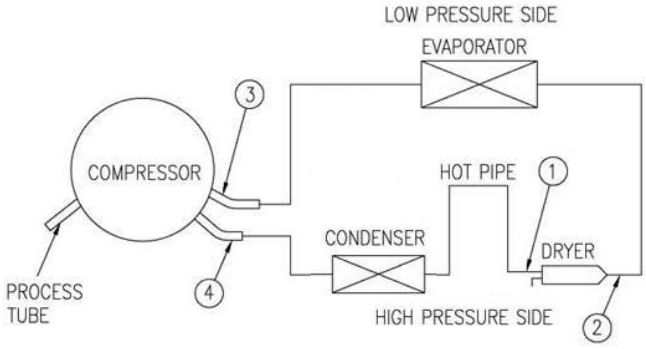 *** When replacing a dryer:** Weld ①and② parts by blowing nitrogen (0.1~0.2kg/cm2) to high pressure side after assembling a dryer. *** When replacing a compressor:** Weld ③and④ parts by blowing nitrogen to the low pressure side. Note) For other parts, nitrogen blowing is not necessary because it does not produce oxidized scales inside pipe because of its short welding time. **※ KEYPOINTING** Welding without nitrogen blowing produces oxidized scales inside a pipe, Which affect on performance and reliability of a product.

Items	Precautions
3.Vacuum degassing.	*** Pipe Connection** Connect a red hose to the high pressure side and a blue hose to the low pressure side. *** Vacuum Sequence** Open ①,② valves and evacuate for 40 minutes. Close valve ①. 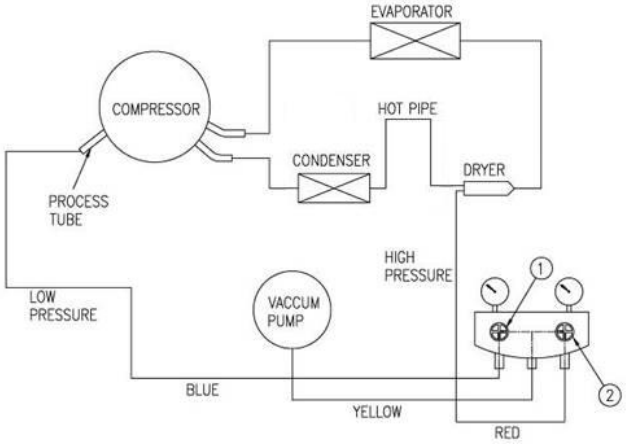 **※ KEYPOINTING** 1) If power is applied during vacuum degassing, vacuum degassing shall be more effective. 2) Operate compressor while charging refrigerant. (It is easier and more certain to do like this.)
4.Refrigerant charging.	*** Charging sequence** 1) Check the amount of refrigerant supplied to each model after completing vacuum degassing. 2) Evacuate bombe with a vacuum pump. 3) Measure the amount of refrigerant charged. - Measure the weight of an evacuated bombe with an electronic scale. - Charge refrigerant into a bombe and measure the weight. Calculate the weight of refrigerant charged into the bombe by subtracting the weight of an evacuated bombe. Indicate the weight of an evacuated bombe 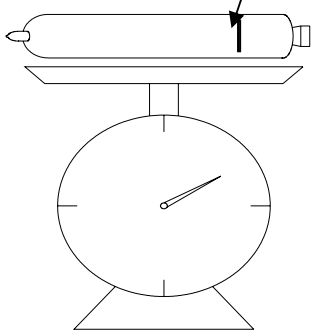 **※ KEYPOINTING** 1) Be sure to charge the refrigerant at around 25˚C. Calculation of amount of refrigerant charged the amount of refrigerant charged = a weight after charging - a weight before charging (a weight of an evacuated cylinder)

Items	Precautions
4.Refrigerant charging.	4) Refrigerant Charging Charge refrigerant while operating a compressor as shown above. 5) Pinch a charging pipe with a pinch-off plier after completion of charging. 6) Braze the end of a pinched charging pipe with copper brazer and take a gas leakage test on the welded parts. 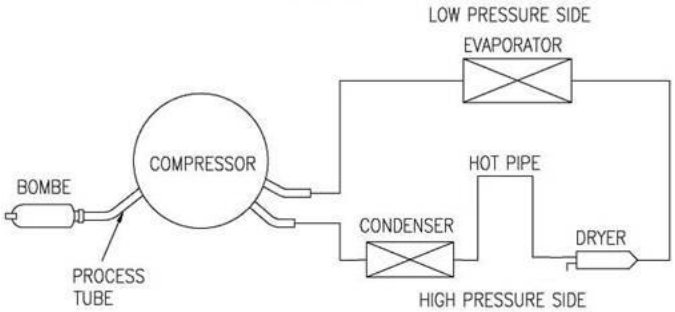
5. Gas-leakage test	* Take a leakage test on the welded or suspicious area with an electronic leakage tester.
6. Pipe arrangement in each cycle	* Check each pipe is placed in its original place before closing a cover back-M/C after completion of work.

9-4. Standard Regulations for Heavy Repair

1) Observe the safety precautions for gas handling.
2) Use JIG (or wet towel) in order to prevent electric wires from burning during welding.
(In order to prevent insulation break and accident.)
3) The inner case shall be melted and insulation material (polyurethane) shall be burnt if not cared during welding inner case parts.
4) The copper pipe shall be oxidized by overheating if not cared during welding.
5) Not allow the aluminum pipes to contact to copper pipes. (In order to prevent corrosion.)
6) Make sure that the inner diameter should not be distorted while cutting a capillary tube.
7) Be sure that a suction pipe and a filling tube should not be substituted each other during welding.
(High efficiency pump.)

9-5. Brazing Reference Drawings.

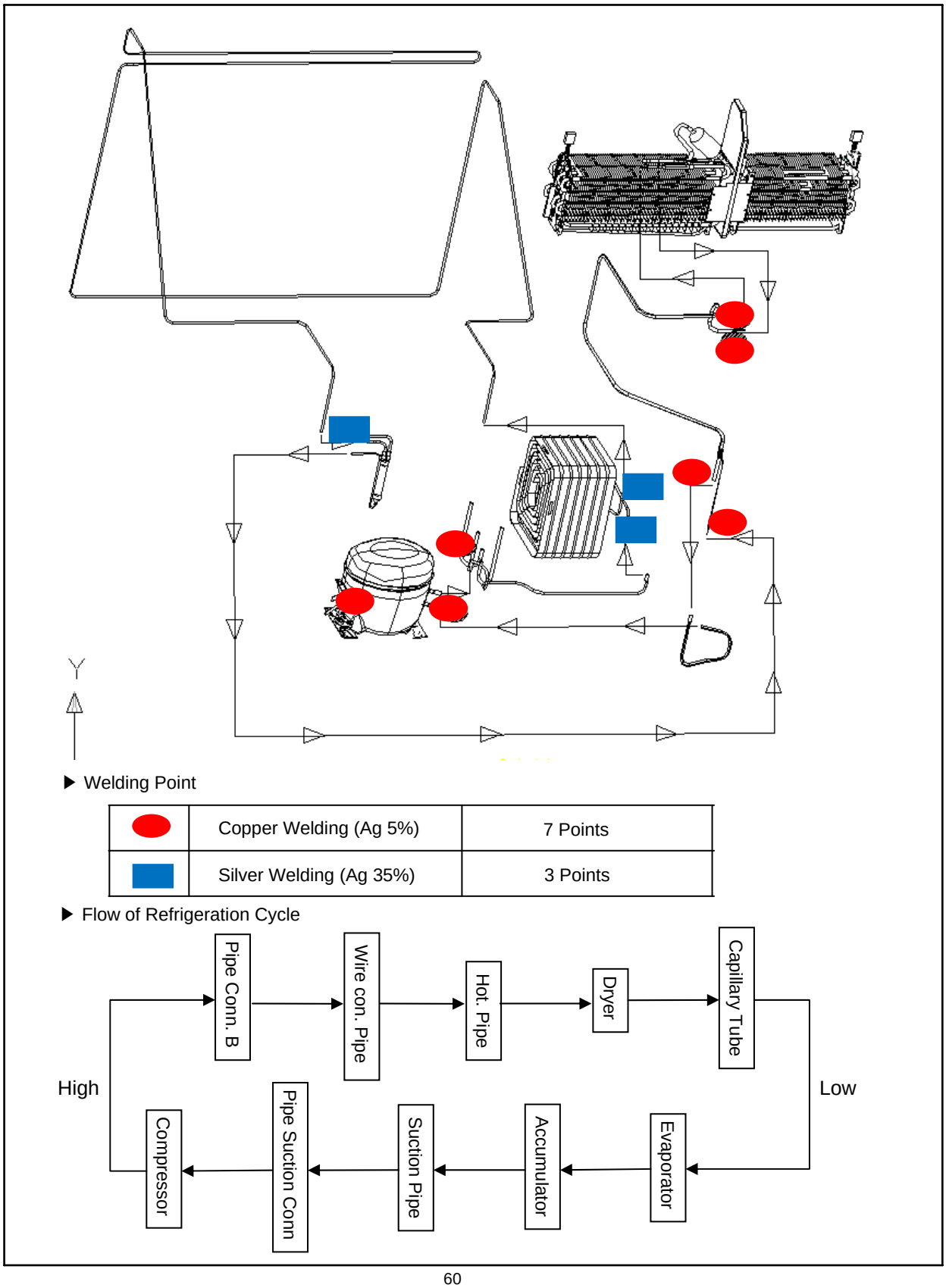

▶ Welding Point

●	Copper Welding (Ag 5%)	7 Points
■	Silver Welding (Ag 35%)	3 Points

▶ Flow of Refrigeration Cycle

9-6. Dispenser Water Flow

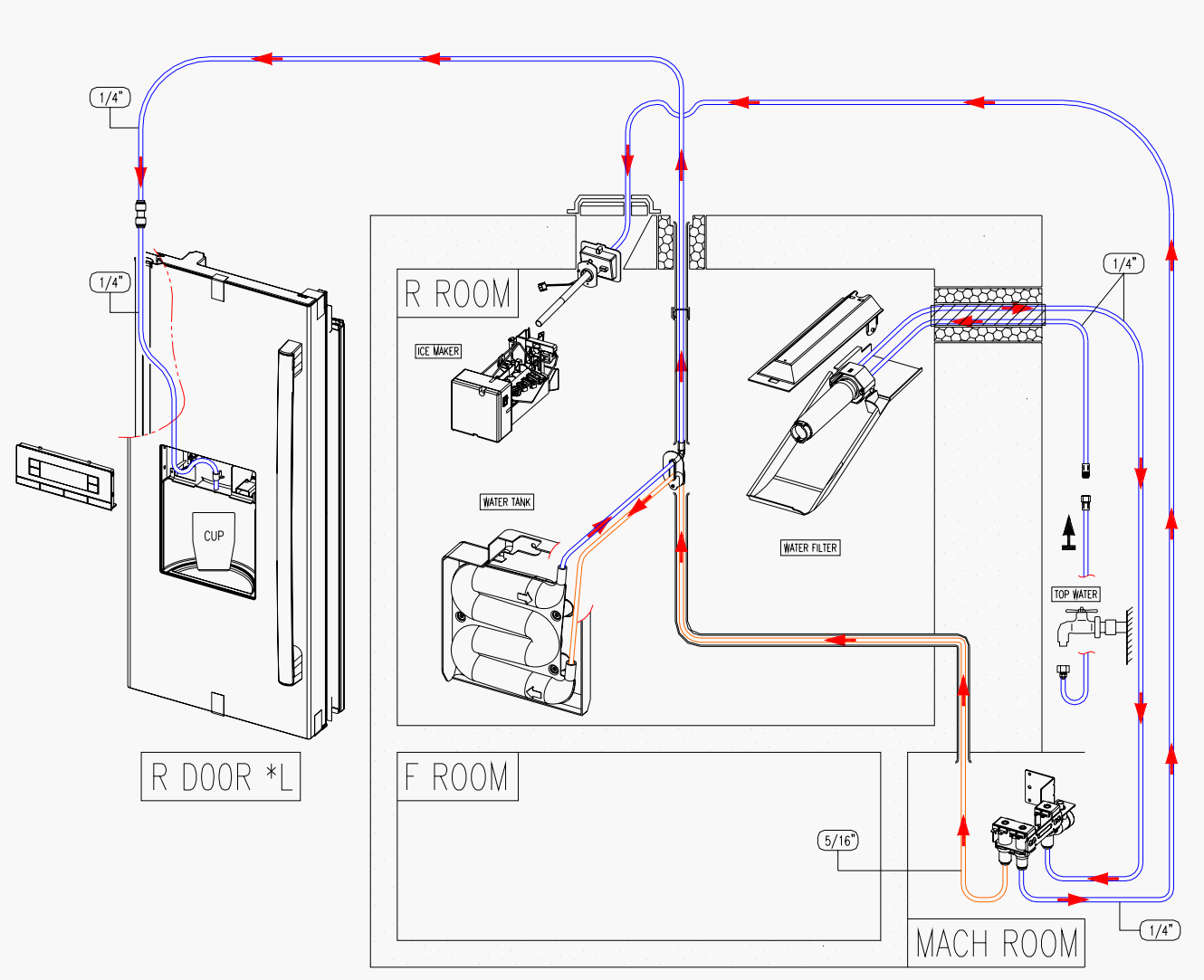

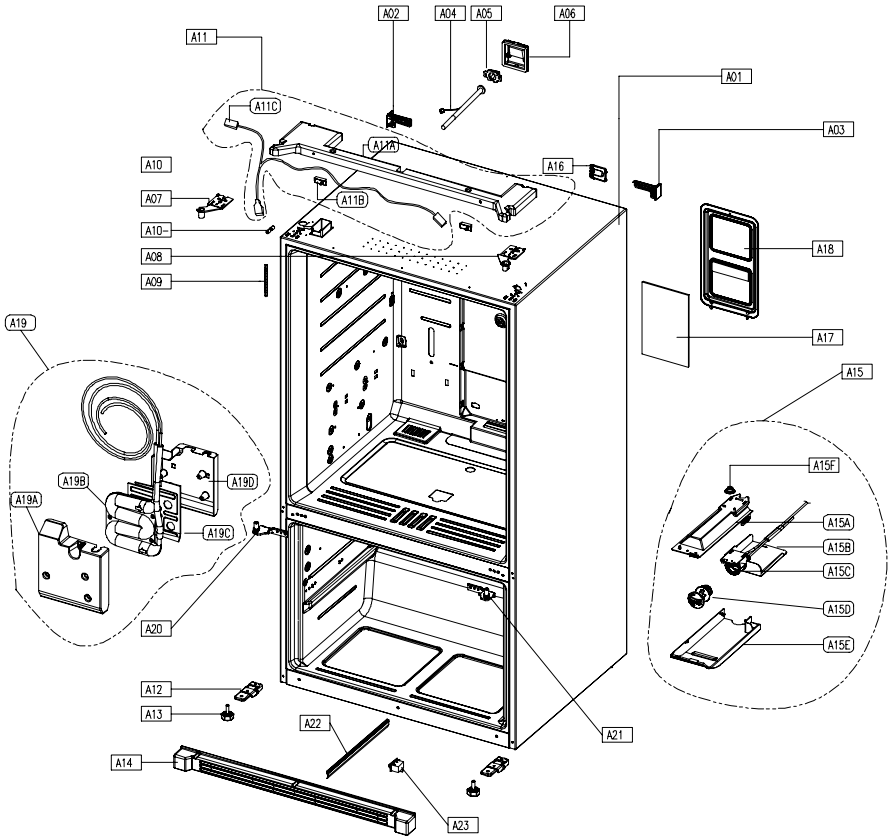

NO		PART-CODE	PART NAME	SPEC.	Q'ty
A01		-	ASSY CAB PRE	RFS-701DTU	1
A02		**3012601201**	HANDLE CAB COVER*L	PP	1
A03		**3012601301**	HANDLE CAB COVER*R	PP	1
A04		**3013226500**	HOSE I/MAKER TUBE AS	RFS-702ETU	1
A05		**3012537400**	GUIDE CAB W/TUBE A AS	L1700(ORANGE)	1
A06		**3001428610**	COVER GUIDE CAB W/TUBE AS	RFS-702ETU	1
A07		**3012931500**	HINGE *T *L AS	RFS-702ETU	1
A08		**3012931600**	HINGE *T *R AS	RFS-702ETU	1
A09		**3015103100**	SPRING GUIDE W/TUBE	SUS304 OD8XL100	1
A10		**3013064220**	HOLDER TUBE A	1/4-1/4 FITTING	1
A11		**3011499C00**	COVER HI *T AS	RFS-702ETU	1
A11	A	**3001423200**	COVER HI *T	PP	1
A11	B	**3018125601**	SWITCH H/BAR DR AS	SP101B-2D1(G) GRAY	2
A11	C	**3012770300**	HARNESS R DR S/W AS	RFS-702ETU	1
A12		**3010670610**	BRACKET ADJ FOOT SAS	RFS-702ETU	2
A13		**3012105700**	FOOT ADJ	PP+BOLT INSERT	2
A14		**3001431200**	COVER CAB BRKT AS	COVER + VINYL	1
A15		**3012232500**	FRAME W/FILT AS	RFS-701DTU	1
A15	A	**3012226000**	FRAME FILT WATER	HIPS	1
A15	B	**3013068600**	HOLDER FILT WATER	HIPS	1
A15	C	**3011902300**	FILTER HEAD MICRO	RFS-701DTU	1
A15	D	**3010984900**	CAP W/FILT	PP	1
A15	E	**3001424400**	COVER FILT WATER	HIPS	1
A16		**3001424100**	COVER GUIDE CAB W/FILT	PP	1
A17		**30143HG060**	PCB MAIN AS	FR-1 252X173-1.6T	1
A18		**3001439100**	COVER M/PCB BOX AS	RFS-702ETU	1
A19		**3018201500**	TANK WATER AS	AC110~127V	1
		3018201510		AC220~240V	
A19	A	**3001437700**	COVER W/TANK *F	PP	1
A19	B	**3018201600**	TANK WATER SAS	RFS-701DTU	1
		3018201110		RFS-702ETU	
A19	C	**3012825200**	HEATER W/TANK AS	AC110~127V,4W	1
		3012825210		AC220~240V,4W	
A19	D	**3001437800**	COVER W/TANK *B	PP	1
A20		**3012931700**	HINGE *M*L AS	RFS-702ETU	1
A21		**3012931800**	HINGE *M*R AS	RFS-702ETU	1
A22		**3012325800**	GASKET CAB BASE	PVC(S+H/2)	1
A23		**3018124000**	SWITCH LAMP *R	SP201R-7DR	1

- Some parts can be chaged for improving their perfomance without notice.

No	DATE	NOTE	REMARK

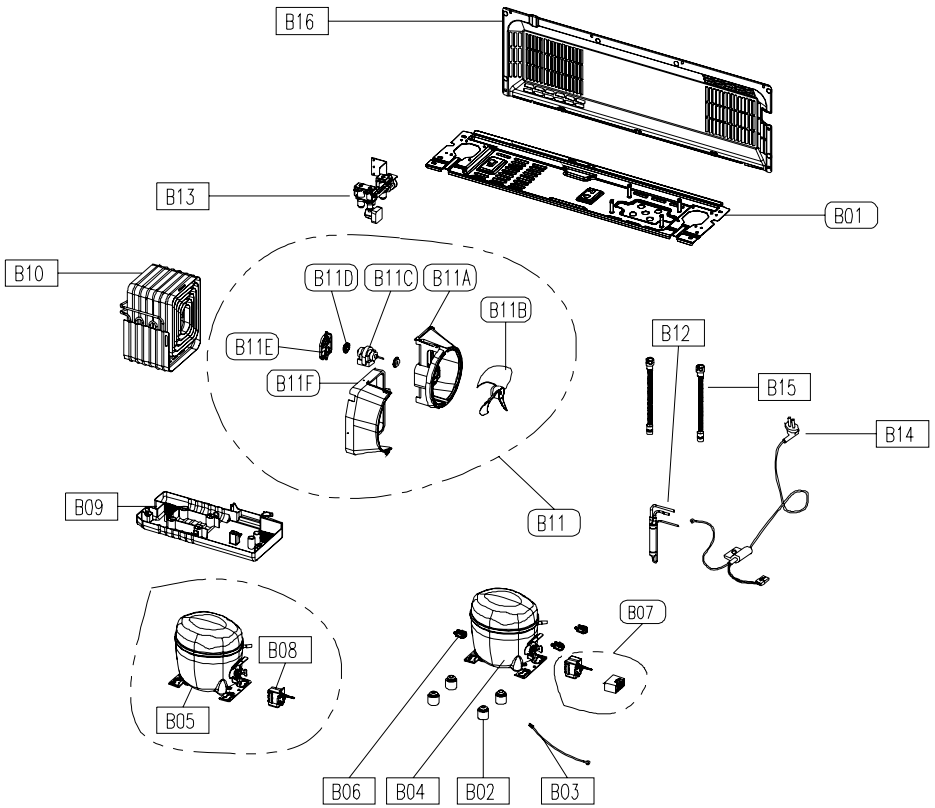

NO		PART-CODE	PART NAME	SPEC.	Q'ty
B01		**3010360500**	BASE COMP AS	RFS-701DTU	1
B02		**3010101600**	ABSORBER COMP	NBR	4
B03		**3012759900**	HARNESS EARTH COMP	FRU-745	1
B04		**3956180910**	COMPPRESSOR	EGX80HLC 115~127V/60Hz	1
B05		**3956186980**		LQ86LAEM 220~240V/50Hz	
B05		**3956169M40**		LQ69LADM 220V 60Hz	
B06		**3016002500**	COMP WASHER	SK-5 T0.8	3
B07		**3018132600**	SWITCH P TSD AS	EGX80HLC ONLY	1
B08		**3018133400**	SWITCH P RELAY AS	LQ86LAEM ONLY	1
		3018134100		LQ69LAEM ONLY	
B09		**3011198800**	CASE VAPORI AS	RFS-702ETU	1
B10		**3014474000**	PIPE WICON AS	RFS-701DTU	1
B11		**3018500600**	M/BELL AS	RFS-702ETU	1
B11	A	**3018500200**	M/BELL	PP	1
B11	B	**3011836300**	FAN	ABS(OD150)	1
B11	C	**3015920000**	MOTOR C FAN	D4612AAA28	1
B11	D	**3010107100**	ABSORBER F MOTR	NBR	2
B11	E	**3012021700**	FIXTURE MOTR	PP	1
B11	G	**3018500300**	M/BELL B	PP	1
B12		**3016808100**	DRYER AS	C1220T-M OD19.05XL135	1
B13		**3015406000**	VALVE WATER AS	110~127V	1
		3015406010		220~240V	
B14		**OPTION**	CORD POWER AS	COUNTRY DEPENDENT	1
B15		**3013201700**	HOSE DRN B	PE FRB-5350NT	2
B16		**3001419000**	COVER MACH RM BSH AS	RFS-702ETU	1

- Some parts can be chaged for improving their perfomance without notice.

No	DATE	NOTE	REMARK

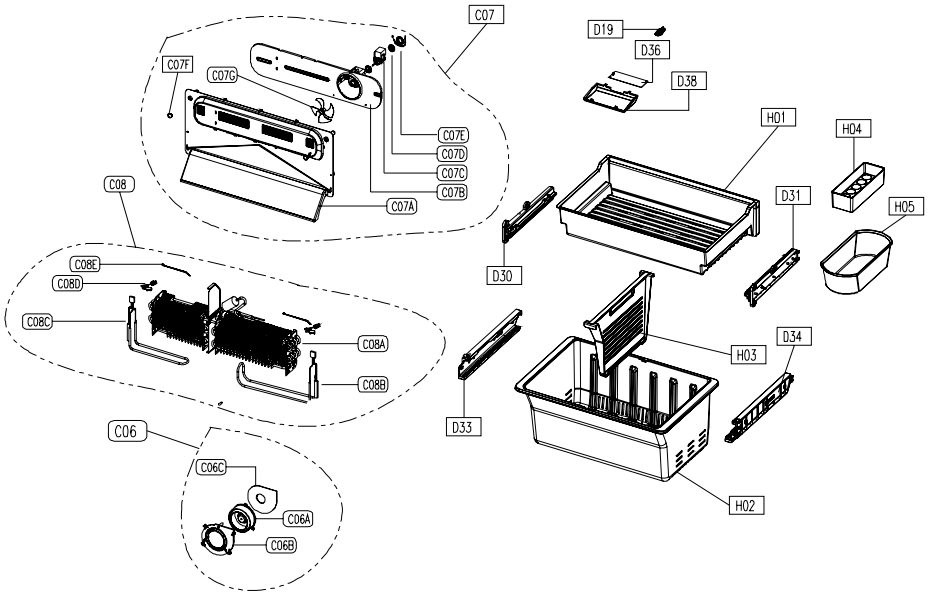

NO		PART-CODE	PART NAME	SPEC.	Q'ty
C06		**3012032600**	FIXTURE R MOTR AS	RFS-702ETU	1
C06	A	**3015920200**	MOTOR R AS	11 OR IMPELLER	1
C06	B	**3012029700**	FIXTURE MOTR R B	PP	1
C06	C	**3012824100**	HEATER R MOTR B AS	AC110~127V,7W	1
		3012824110		AC220~240V,7W	
C07		**3018928100**	LOUVER F AS	RFS-702ETU	1
C07	A	**3018927500**	LOUVER F	HIPS	1
C07	B	**3012029400**	FIXTURE F MOTR A	PP	1
C07	C	**3015920100**	MOTOR F AS	D4612AAA29	1
C07	D	**3010107100**	ABSORBER F MOTR	NBR	2
C07	E	**3012023700**	FIXTURE MTR S3	PP	1
C07	F	**3010924600**	CAP F LOUVER	HIPS T2.3	2
C07	G	**3011835900**	FAN	OD100,SHAFT OD3.17	1
C08		**3017068600**	EVA AS	AC110~127V,7W	1
		3017068620		AC220~240V,7W	
C08	A	**3017068610**	EVA SAS	RFS-702ETU	1
C08	B	**3012823200**	HEATER SHEATH F AS	AC110~127V,200W	1
		3012823210		AC110~127V,200W	
C08	C	**3012823300**	HEATER SHEATH R AS	AC115, 200W	1
		3012823310		AC230V,200W	
C08	D	**3014808900**	SENSOR D AS	PBN-43B	2
C08	E	**4856813100**	CABLE TIE	DA-140	2
D19		**3011442610**	COVER F SENSOR	ABS	1
D30		**3015318400**	SUPPORTER CASE F*L AS	RFS-702ETU	1
D31		**3015318500**	SUPPORTER CASE F*R AS	RFS-702ETU	1
D33		**3015314900**	SUPPORTER F DRAW RAIL*L	ABS	1
D34		**3015315000**	SUPPORTER F DRAW RAIL*R	ABS	1
D36		**30143H7560**	PCB PRE LED AS	6-LED FR-4 165X60-106T	1
D38		**3015514900**	WINDOW F LAMP	ABS	1
H01		**3011199200**	CASE F AS	RFS-702ETU	1
H02		**3011199300**	CASE F DRAW AS	RFS-702ETU	1
H03		**3014582500**	PLATE F DRAW DV	HIPS	1
H04		**3010571400**	BOX EGG AS	RFS-702ETU	1
H05		**3011199800**	CASE F SM AS	RFS-702ETU	1

- Some parts can be chaged for improving their perfomance without notice.

No	DATE	NOTE	REMARK

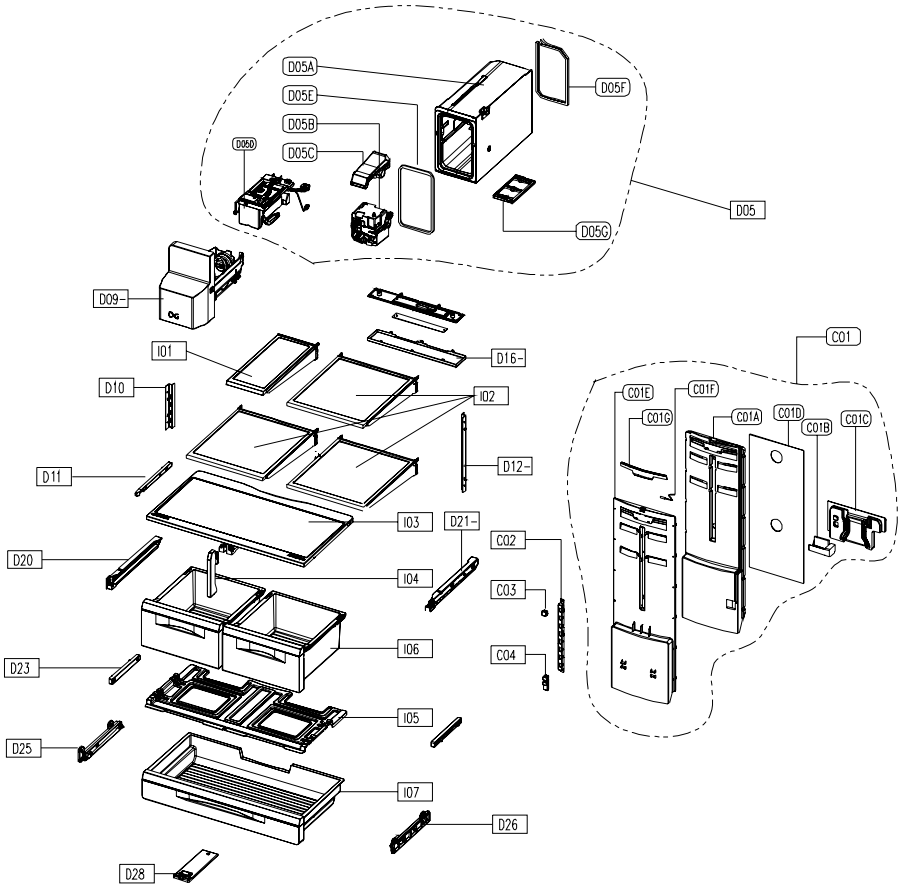

NO		PART-CODE	PART NAME	SPEC.	Q'ty
C01		**3001439200**	COVER MULTI DUCT AS	RFS-701DTU	1
C01	A	**3013379900**	INSU MULTI DUCT A	F-PS	1
C01	B	**3016767200**	DAMPER AS	DU24-113	1
C01	C	**3013380000**	INSU MULTI DUCT B	F-PS	1
C01	D	**3013377300**	INSU MULTI DUCT D	F-PS, T2.5XW273XL640	1
C01	E	**3001437300**	COVER MULTI DUCT	HIPS	1
C01	F	**3014808400**	SENSOR R AS	PBN-34B	1
C01	G	**3011654400**	DECO MULTI DUCT SAS	RFS-701DTU	1
C02		**3015316400**	SUPPORTER SHELF *M AS	RFS-702ETU	1
C03		**3010983800**	CAP SHELF SUPORT *T	HIPS	1
C04		**3010985000**	CAP SHELF SUPORT *U	HIPS	1
D05		**3010574800**	BOX I/MAKER AS	110~127V	1
		3010574810		220~240V/50Hz	
		3010574820		220V/60Hz	
D05	A	**3010568000**	BOX I/MAKER URT AS	RFS-702ETU	1
D05	B	**3012030700**	FIXTURE GEARED MOTR AS	115V/60Hz	1
		3012030710		220~240V/50Hz	
		3012030720		220V/60Hz	
D05	C	**3012536500**	GUIDE ICE AIR AS	GUIDE B+C	1
D05	D	**3011199500**	CASE I/MAKER AS	DIM-AL8A. FOR 120VAC	2
		3011199510		DIM-AL8A. FOR 230VAC	
D05	E	**3012324100**	GASKET I/CRUSHER	SILICON	1
D05	F	**3007705900**	SEAL I/MAKER BOX	EPDM T10XW10XL790	1
D05	G	**3012032200**	FIXTURE R SHELF SM	ABS	1
D09		**3011124800**	CASE I/CRUSHER AS	RFS-701DTU	1
D10		**3015316300**	SUPPORTER SHELF *L AS	RFS-702ETU	1
D11		**3012533000**	GUIDE I/BOX*U	HIPS	1
D12		**3015316500**	SUPPORTER SHELF *R AS	RFS-702ETU	1
D20		**3012540600**	GUIDE V/CASE*L AS	RFS-701DTU	1
D21		**3012540700**	GUIDE V/CASE*R AS		1
D23		**3015320600**	SUPPORTER WIDE CASE COVER	HIPS	2
D25		**3015318600**	SUPPORTER MEAT RAIL*L AS	RFS-702ETU	1
D26		**3015318700**	SUPPORTER MEAT RAIL*R AS	RFS-703ETU	3
D28		**3012537000**	GUIDE MEAT KEEPER AS	RFS-702ETU	1
I01		**3012228710**	FRAME R SHELF SM AS	RFS-702ETU	1
I02		**3012228700**	FRAME R SHELF AS	RFS-702ETU	1
I03		**3001439300**	COVER V/CASE AS	RFS-702ETU	1
I04		**3001437900**	COVER VEGETB GUIDE	HIPS	1
I05		**3001441100**	COVER WIDE CASE AS	RFS-702ETU	1
I06		**3011124500**	CASE VEGETB AS	RFS-702ETU	2
I07		**3011124600**	CASE WIDE AS	RFS-702ETU	2

- Some parts can be chaged for improving their perfomance without notice.

No	DATE	NOTE	REMARK

DOOR F

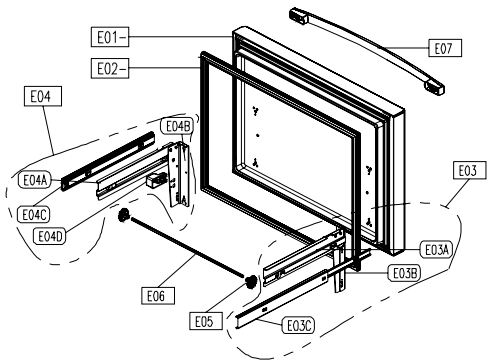

DOOR R*L

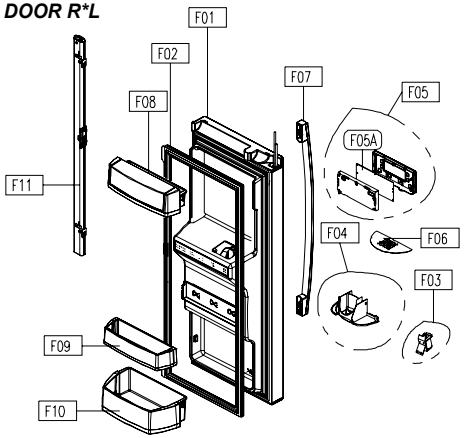

DOOR R*R

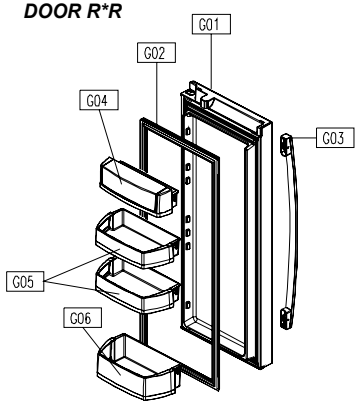

NO		PART-CODE	PART NAME	SPEC.	Q'ty
E01		**3011799C10**	DOOR F PRE AS	RFS-702ETU	1
E02		**3012324700**	GASKET F DR AS	PVC-S	1
E03		**3012228800**	FRAME F DRAW RAIL *L AS	RFS-702ETU	1
E03	A	**3012201400**	FRAME F DRAW RAIL*L SAS	RFS-702ETU	1
E03	B	**3012225100**	FRAME F DRAW DR RAIL*L	SECC+PAINT(WH)	1
E03	C	**3010402100**	BODY F DRAW RAIL*L AS	H53 L508	1
E04		**3012228900**	FRAME F DRAW RAIL *R AS	RFS-702ETU	1
E04	A	**3012201700**	FRAME F DRAW RAIL*R SAS	RFS-702ETU	1
E04	B	**3012225200**	FRAME F DRAW DR RAIL*R	SECC+PAINT(WH)	1
E04	C	**3010402500**	BODY F DRAW RAIL*R AS	H53 L508	1
E04	D	**3016307500**	BUTTON F DR SW	HIPS	1
E05		**3017300700**	GEAR F RAIL*M	POM	2
E06		**3012032700**	FIXTURE F RAIL GEAR	SWCH10A	1
E07		**3016046500**	HANDLE AS	RFS-701DTU	1
F01		**3011799D10**	DOOR R*L PRE AS	RFS-701DTU	1
F02		**3012324800**	GASKET R DR*L AS	PVC-S	1
F03		**3015403210**	VALVE SOL DISPS.	110~127V	1
		3015404100		220~240V/50Hz	
		3015402110		220V/60Hz	
F04		**3010571500**	BOX DISPNS /I SHUT AS	RFS-702ETU	1
F05		**3012232600**	FRAME F PCB AS	RFS-701DTU	1
F05	A	**30143HG160**	PCB FRONT AS	RFS-701DTU	1
F06		**3012407710**	GRILLE DISPNS	SUS304	1
F07		**3012654100**	HANDLE AS	RFS-701DTU	1
F08		**3019059300**	POCKET DAIRY AS	RFS-701DTU	1
F09		**3019059500**	POCKET SM AS	RFS-701DTU	1
F10		**3019059600**	POCKET GALLON AS	RFS-701DTU	1
F11		**3014599B00**	PLATE R DV AS	RFS-702ETU	1
G01		**3011799E10**	DOOR R*R PRE AS	RFS-701DTU	1
G02		**3012327500**	GASKET R DR*R AS	PVC-S	1
G03		**3012654100**	HANDLE AS	RFS-701DTU	1
G04		**3019059300**	POCKET DAIRY AS	RFS-701DTU	1
G05		**3019059400**	POCKET UTILITY AS	RFS-701DTU	1
G06		**3019059600**	POCKET GALLON AS	RFS-701DTU	2

- Some parts can be chaged for improving their perfomance without notice.

No	DATE	NOTE	REMARK