Panasonic®

Peltier Minibar

Operating and Installation Instructions

Model No. NR-A4U1 / AL4U1
NR-AK4U1 / AKL4U1
NR-A6U1 / AL6U1
NR-AK6U1 / AKL6U1

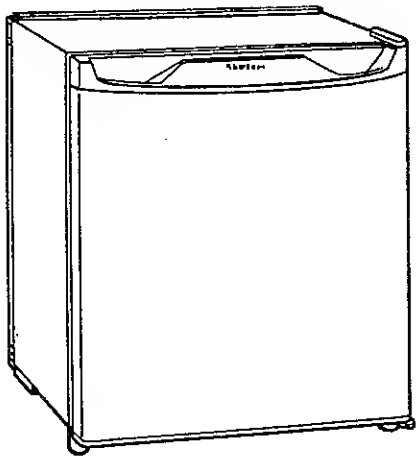

NR-A4U1

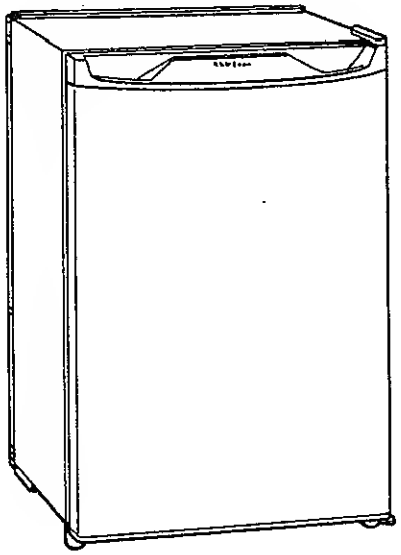

NR-A6U1

⚠WARNING

This technical information is provided for experienced technicians only and is not designed for use by the general public. It dose not contain warnings or cautions to advise non-technical individuals of potential dangers in attempting to service a product. Products powered with electricity should be serviced or repaired only by experienced professional technicians. Any attempt to service or repair the product described herein by anyone else could result in serious injury.

AK—K03070

TABLE OF CONTENTS

SAFETY PRECAUTIONS·····2
INSTALLATION·····3
OPERATION·····5
MAINTENANCE·····5
BEFORE CALLING FOR SERVICE·····6
OBTAINING SERVICE·····7
LIMITED WARRANTY·····7
SPECIFICATIONS·····7

SAFETY PRECAUTIONS

- This appliance dose not contain a compressor and once plugged securely into an active, 120V, 60Hz, grounded power outlet, it will begin the cooling process instantly without producing a noise.
- Make sure there is a sufficient and unobstructed air flow for ventilating purposes. See INSTALLATION guideline on page 3.
- This appliance should not be used as a freezer nor should it be used for storing products that require temperatures lower than 40°F (milk, ice cream, dairy products, raw meat, and some medications).
- Keep flammable materials, liquids or solids, away from this appliance.
- Avoid placing articles on top of this appliance and do not apply excessive force to th door.
- All repairs of this appliance must be performed by qualified personnel only.
- Any unauthorized modification to this appliance will void the warranty and may cause malfunction and/or injury.
- Handle electrical cord with caution and disconnect power before replacing a light bulb.
- Use this appliance in accordance with all applicable codes and regulations.

INSTALLATION

① This appliance may be installed either "free-standing" or "in-cabinet".
② To ensure optimum performance and sufficient air flow, make sure that all clearances shown in figures below are strictly adhered to.
③ Do not install this appliance in a high humidity environment, direct sun, or in close proximity to heat sources.

Free Standing

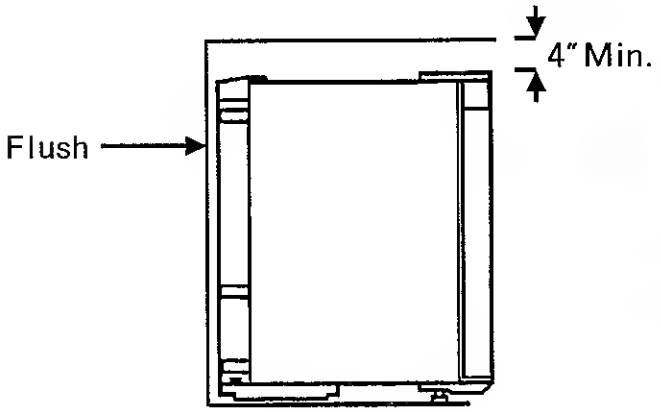

Fig.1

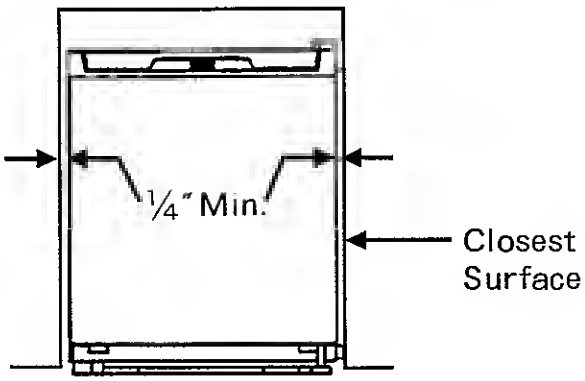

Fig.2

④ Fitting the door slide(In case of Fig.1,Fig.2 on page 3).
(This is an example of a door opening to the right. For openings to the left, follow instructions asymmetrically.)

④ Fitting the door slide(In case of Fig.1,Fig.2 on page 3).
(This is an example of a door opening to the right. For openings to the left, follow instructions asymmetrically.)

In Cabinet (1)

Furniture—1

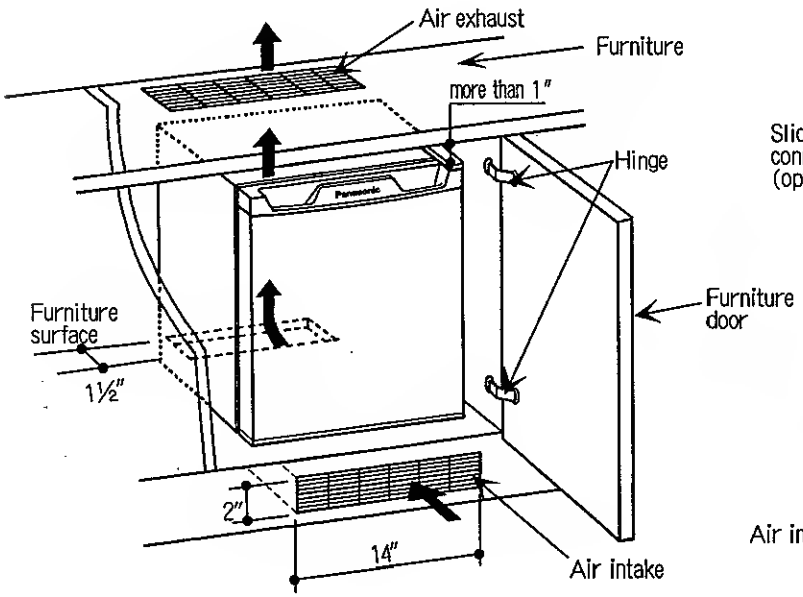

Fig.3

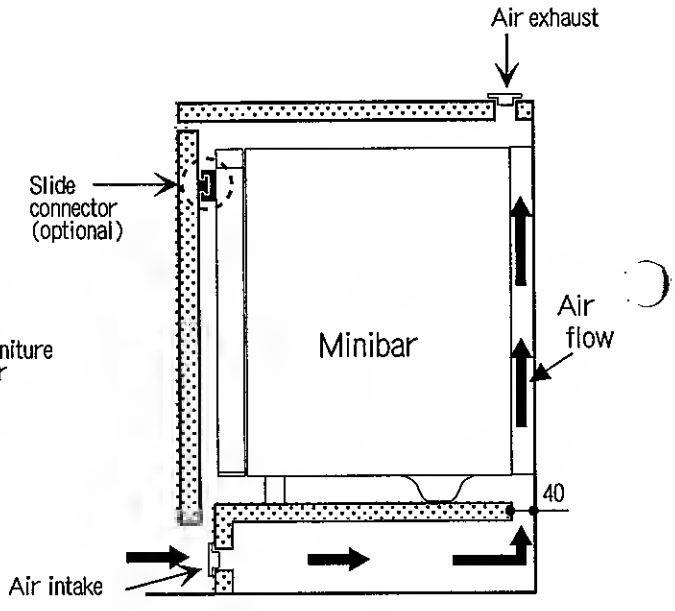

Fig.4

Furniture—2

In Cabinet (2)

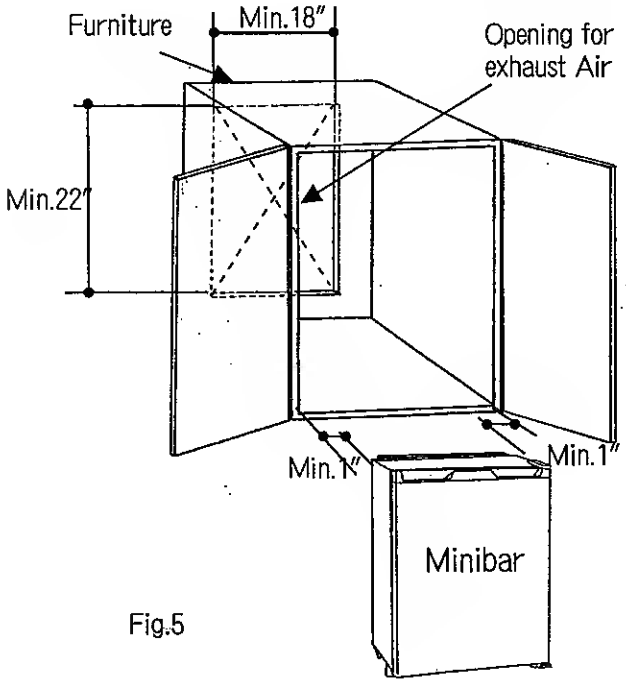

Fig.5

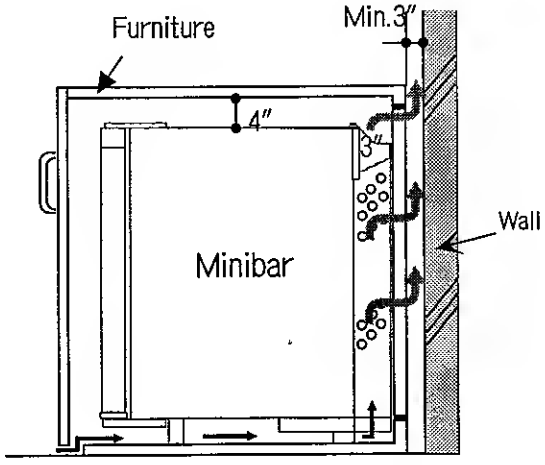

Fig.6

OPERATION

1. Once plugged into an active power outlet, this appliance will begin to operate.
2. The temperature is controlled and maintained automatically.

MAINTENANCE

Light bulb replacement

1. Unplug the AC cord.
2. Using Phillips screwdriver, remove the screw holding the lens (located in the upper right hand corner in the cavity).
3. Remove the lens and replace the light bulb (locally available).
4. Re-attach the lens and plug AC cord into power outlet

Cleaning

1. Wire and door shelves are removable and should be cleaned periodically.
2. Door gasket and the cavity should be kept clean and free of food particles.
3. Use only warm water and mild liquid detergent (dishwasher type) to clean this appliance.
4. Make sure all washed surfaces are wiped dry.

General notes

1. Internal fan will continue to operate as long as the appliance is plugged into power outlet and regardless of whether the door is open or not.
2. Do not use any of the following agents for cleaning this appliance:strong, alkaline, abrasive, or powder detergents, scrubbers, alcohol or petroleum based chemicals.

BEFORE CALLING FOR SERVICE

Symptom	Check Points
Appliance does not operate (no fan, no light, no cooling action)	Make sure that AC cord is not damaged and is plugged into an active power outlet.
Cooling performance unsatisfactory	Excessive amount of food in the cavity Hot or warm food in the cavity Restricted air flow (poor ventilation) Direct sun light or other sources of heat Door being open too frequently
Dew formation	Door not closed completely Hot items in the cavity Door being open too frequently
Noisy operation	Positioned on uneven surface, wobbling

NOTE: The following ARE NOT considered a malfunction:

1. Low level humming sound produced by circulating pump. This low level sound may vary depending on ambient temperature and pump's duty cycle.
2. Dew formation on the outer cabinet.

OBTAINING SERVICE

To locate nearest servicer please:

a) Refer to the enclosed list of Panasonic Factory Service Centers
b) Visit our web at: www.panasonic.com
c) Call toll-free: 1—800—211—PANA
d) Contact Panasonic at address shown below

LIMITED WARRANTY

This appliance is guaranteed for period of one (1) year from the date of original purchase.
For specific terms and conditions of this limited warranty, please refer to the enclosed Warranty Card.

SPECIFICATIONS

	NR-A4U1, NR-AL4U1 NR-AK4U1, NE-AKL4U1	NR-A6U1, NR-AL6U1 NR-AK6U1, NE-AKL6U1
Capacity	1.4cu. Ft. (40 l)	2.0cu. Ft. (56 l)
Weight	33 lbs. (15 kg)	37 lbs. (20 kg)
Width	18 1/8 (460 mm)	18 1/8 (460 mm)
Depth	18 1/2 (470 mm)	18 1/2 (470 mm)
Height	21 3/4 (550 mm)	28 3/4 (730 mm)
Power source	120VAC／60Hz	120VAC／60Hz

Panasonic

Home and Commercial Products Company

Hospitality Products Group
One Panasonic Way. Panazip 4A-4, Secaucus, NJ 07094
www.panasonic.com

AK-K03070