VEDETTE

mérite votre confiance

FR GUIDE D'INSTALLATION ET D'UTILISATION
EN INSTRUCTION FOR USE

Réfrigérateur-Congélateur
Fridge-Freezer



VEDETTE

Dear Customer,

You have just acquired a **fridge-freezer VEDETTE** and we would like to thank you.

We have invested all our dedication and know-how in this appliance so that it would best meet your needs. With innovation and performance, we designed it to be always easy to use.

In the **VEDETTE** product range, you will also find a wide choice of ovens, microwaves, cooking hobs, ventilation hoods, cookers, dishwashers, washing machines, driers, and freezers, that you can coordinate with your new **VEDETTE fridge-freezer**.

Visit our website **www.vedette.com** where you will find all of our products, as well as useful and complementary information.

VEDETTE

As part of our commitment to constantly improving our products, we reserve the right to make changes to them based on technical advances to their technical and functional features and appearance.

⚠ Warning:
Before installing and using your appliance, please carefully read this Guide to Installation and Use, which will allow you to quickly familiarise yourself with its operation.



EN

2 CONTENTS

1 Safety Instructions
• Environmental Protection and saving Energy..... 15

2 Product description 16
• No frost : significance and operation..... 16

3 Installing your appliance
• Installing your appliance..... 17
• Electrical connection..... 17

4 Using the refrigerator compartment
• Manipulating thermostat..... 18
• Setting the temperature..... 18
• Temperature indicator..... 18
• Air cooling system..... 18
• Preparing food for the refrigerator..... 18
• Arranging food in your refrigerator..... 18
• Automatic Defrosting..... 18

5 Using the freezer compartment
• Frozen and deep-frozen food..... 19
• Preparing food for freezing..... 19
• Food freezing guide..... 19
• Arranging food in your freezer..... 20
• Defrosting food..... 20
• Automatic freezer defrosting..... 20

6 Ongoing maintenance
• Cleaning your appliance..... 21
• Changing the light bulb..... 21

7 Operating problems 22

8 After sales service 22

This guide to installing and using your fridge-freezer is applicable to several models. There may be slight differences between your appliance's details and features and those described here.

SAFETY INSTRUCTIONS

This appliance is intended for domestic use only. It has been designed for preserving and freezing food. **The following instructions are for your own safety and should be observed without fail. We can neither be held responsible, nor uphold the guarantee in case of failure to observe these recommendations, which may lead to material damage or physical injury.**

Your appliance must be installed, fixed if necessary and used in compliance with the instructions in this operating and installation instructions manual in order to avoid any damage and /or danger due to any lack of stability or faulty installation.

If the appliance has been delivered to your home in a horizontal position, stand it upright and then wait 2 hours before plugging it in. A small amount of oil may have flowed into the refrigeration circuit, and you must allow time for this to flow back towards the motor before connecting the appliance. Failure to do so may damage the appliance.

If you appliance is fitted with wheels, please remember that they are only designed to assist in small movements. Do not use them for longer journeys.

Carry out an initial cleaning operation (see the section on Installing your appliance) before connecting your appliance to the electrical supply. Disconnect your appliance prior to performing any maintenance operation. Grasp the plug directly, instead of pulling on the power cable.

Do not place bottles or jars containing liquids in the freezer unless they are only two-thirds full, freezing causes liquids to expand, which can cause the container to explode.

Do not use any other method than those we recommend in this manual for speeding up defrosting.
Do not use electrical equipment inside compartments designed for preserving frozen food unless the manufacturer recommends otherwise.
Do not let children play with the appliance and keep your pets well away from it. Worn out appliances must be rendered unusable. Unplug and cut the electric cable flush with the appliance.Render the door catch unusable or, better still, remove the door, so as to ensure that no child or animal risks being shut inside whilst playing.
If a problem arises that you are unable to resolve using the advice given (see the Ongoing maintenance section), please contact an official after-sales service or a qualified professional.

Danger:
Your appliance's refrigeration circuit is filled with isobutane refrigerant (R600a), a natural, non-polluting gas that is, however, inflammable. Ensure that none of the components in your applia nce's refrigeration circuit have been damaged during transport or installation. If you detect any damage, keep your appliance away from flames or any type of source of heat or combustion and ventilate its location.

This appliance is not intended for use by persons (including children) with reduced physical, sensory or mental capabilities, or lack of experience and knowledge, unless they have been given supervision or instruction concerning use of the appliance by a person responsible for their safety.

Children should be supervised to ensure that they do not play with the appliance.

ENVIRONMENTAL PROTECTION

This appliance's packaging material is recyclable. Help recycle it and protect the environment by dropping it off in municipal receptacles provided for this purpose.

Your appliance also contains a great amount of recyclable material. It is marked with this label to indicate the used appliances that should not be mixed with other waste. This way, the appliance recycling organised by your manufacturer will be done under the best possible conditions, in compliance with European Directive 2002/96/EC on Waste Electrical and Electronic Equipment. Contact your town hall or your retailer for the used appliance collection points closest to your home.
We thank you doing your part to protect the environment.

SAVING ENERGY

To reduce your appliance's electrical consuption:
- Install it in a suitable place (see" Installation of your appliance" section).
- Leave the door open as little as possible. Do not place food that is still hot in your refrigerator or freezer, particularly in the case of soups or dishes that release a lot of steam.
- Ensure that you appliance operates optimally by not allowing too much frost to build up in the freezer (defrost it when the frost is more than 5-6 mm thick) and clean its condenser periodically (See the Ongoing maintenance your appliance section).
- Periodically check the door seals and make sure that the doors close firmly. If they do not, please contact our After-sales service.

In compliance with the latest legislation concerning environmental protection, your appliance does not contain any CFC. Instead it uses a gas called R600a. The exact type of refrigerant used in your appliance is also clearly indicated on the identification plate inside your appliance's refrigerator section, low down on the left-hand wall.
R600a is a non-polluting gas that does not harm the ozone layer and whose contribution to the greenhouse effect is virtually zero.

EN 2 PRODUCT DESCRIPTION

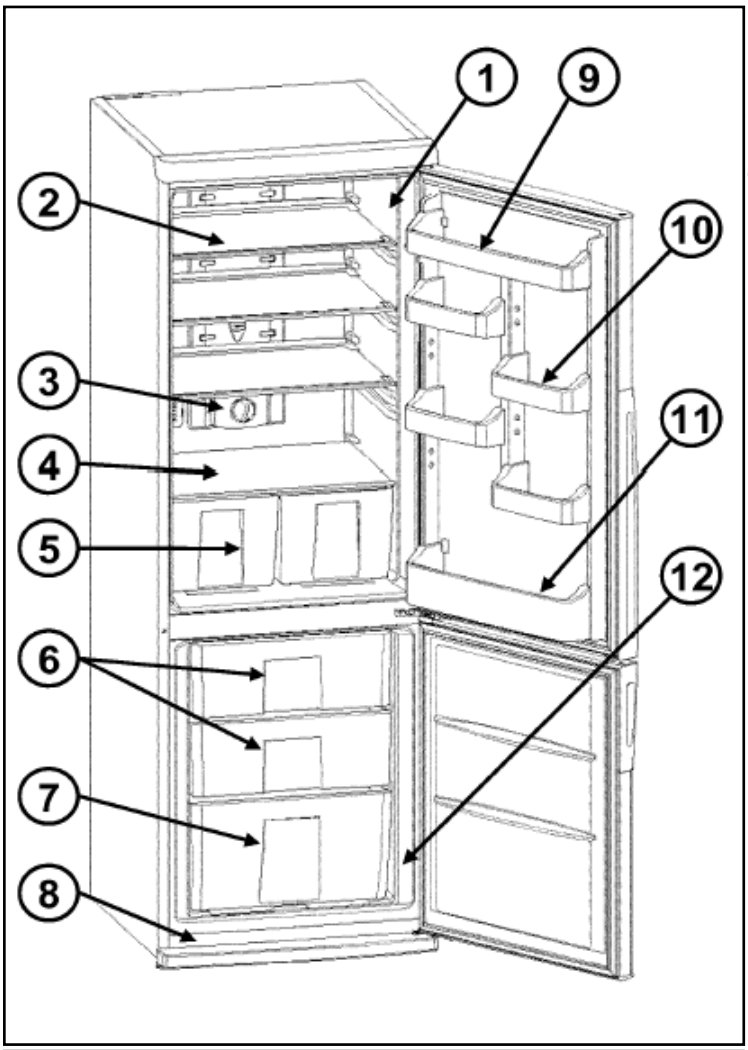

1) Refrigerator Compartment
2) Refrigerator shelves
3) Refrigerator thermostat
4) Vegetable drawer shelf
5) Vegetable drawers
6-7) Freezer drawers
8) Plinth
9-10) balconies
11) Bottle balcony
12) Freezer Compartment

This user manual is applicable to several models. There may be slight diferences between your appliance's details and features and those described here.

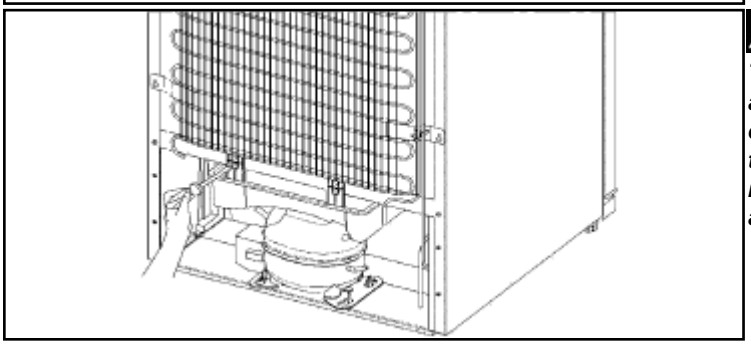

Information: No Frost
This appliance has been designed and manufactured to avoid frost accumulating inside it. A system automatically melts away any frost and the water produced flows through a small pipe into the container provided, where it evaporates away. You do not need to defrost the appliance yourself.

Attention:
Your appliance must be installed in compliance with the instructions given in this "Operating and installation instructions manual" in order to keep your food under optimum conditions and with optimal energy consumption.

INSTALLING

• The appliance should be installed in a dry, well-ventilated room.
• Avoid balconies, verandas, and patios, the excessive heat in summer and the cold in winter could prevent your appliance from functioning properly, or may even damage it.
• Do not place your appliance near a heat source such as an oven or radiator.
• Your appliance has been designed for optimum functioning at a certain ambient temperature; it is designed for a particular climate class. This climate class is clearly indicated on the identification plate situated on the inside of your appliance, low down on the left wall. Outside of this temperature range, the performance of your appliance may be reduced.
• Leave a minimum distance between your refrigerator and your other units of 3 to 5cm at the sides and 10cm at the top, to maximise air circulation around the appliance.
•Position the appliance at a suitable distance from the wall using the spacers provided in the accessories packet. The spacers should be mounted on the back of the appliance.

Climate Classe	Ambient Temperatures
N	+16° to +32°C
ST	+18° to +38°C
T	+18° to +43°C

Advise:
Once you have installed your appliance, adjust its feet so that it is tilting backwards slightly, this helps the door to close correctly.
Before placing any food in your appliance, clean it inside and out with a bicarbonate of soda solution (1 dessertspoon of bicarbonate to 4 litres of water). Do flot use alcohol, scouring powder or detergents, which could damage the surfaces. See the section on "Cleaning your Appliance".

ELECTRICAL CONNECTION

Attention:
For your own safety, you must comply with the instructions given below.
Electrical installation must comply with Standard NF C *15-100, in particular concerning **the Earth.**
Three-core flex 3x2.5 mm2, 230V single-phase connected to:
- 20A single-phase 230V-50Hz supply
- ELCB and an individual fuse (10 or 16A depending on the model)

We cannot be held responsible for any incident caused by faulty electrical installation.

Recommendations for the electrical installation of your appliance:

• Do not use extension leads, adaptors, or socket strips.
• Always make sure your circuit is earthed.
• The socket must always remain accessible, yet be out of the reach of children.

If you have any doubts, contact your installer.

Your appliance is compliant with European Directives CEE/73/23 (low voltage directive), CEE/89/336 (electromagnetic compatibility) and CEE/96/57 (energy efficiency) as well as their modifications.

Attention:
If the appliance has been delivered to your home in a horizontal position, stand it upright and then wait 2 hours before plugging it in. A small amount of oil may have flowed into the refrigeration circuit, and you must allow time for this to flow back towards the motor before connecting the appliance. Failure to do so may damage the appliance. Carry out an initial cleaning operation (see the section on "Installing your appliance") before connecting your appliance to the electrical supply. Disconnect your appliance prior to performing any maintenance operation. Grasp the plug directly, instead of pulling on the power cable.

EN 4 USING THE REFRIGERATOR COMPARTMENT

MANIPULATING THERMOSTAT

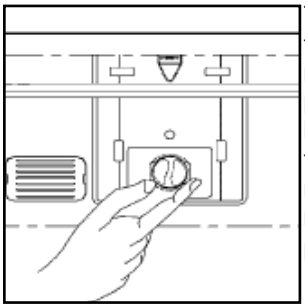

To adjust the temperature, set the thermostat knob on one of the surrounding figures. Position 1 corresponds to the least cold setting, the higher the number, the colder the temperature setting. When the thermostat is in position “0” your refrigerator is off .The appliance is always powered. :

“COLD ZONE” SYMBOLS (Depending on models)

You will find the symbol opposite in your refrigerator. It clearly shows the location of your appliance's coldest zone: the temperature here is + 4°C or less. A temperature indicator here enables you to check that your refrigerator is working correctly:



TEMPERATURE INDICATOR (Depending on models)

● Temperature to set

OK Correct temperature

Attention:

Prolonged opening of the door will cause the internal temperature to rise. You must therefore read the indicator within 30 seconds of the door being opened for the reading to be correct.

Setting the temperature

When putting your appliance into service, set the thermostat to a medium position. Check the temperature indicator 4 hours after putting your appliance into service, or after any change in the thermostat setting, observe the temperature light :

- If the indicator is still black, lower the temperature gradually by selecting a higher number around the thermostat and checking the temperature indicator again after 4 hours. Repeat this operation as many times as necessary.
- If the indicator goes green and "OK" is indicated, the temperature in your refrigerator is correctly set.

Advise:

Your refrigerator's internal temperature is closely linked to the ambient temperature, how frequently the door is opened and the amount and temperature of the food you have put in your refrigerator. You must therefore check the temperature indicator regularly and adjust the setting if necessary, as explained above.

AIR COOLING SYSTEM: Regulated Cold

Your appliance is equipped with a cold air ventilation system.
A distribution column directs the air to every level, providing a very homogeneous temperature and avoiding any condensation forming on the shelves.

PREPARING FOOD FOR THE REFRIGERATOR

Carefully wrap fresh foods: they will then keep their flavour, colour, humidity content and freshness. You also avoid the taste of some foods contaminating the taste of others. Only vegetables, fruit and salad vegetables can be stored in the vegetable compartment without being packed. Let hot dishes and drinks cool down outside the appliance. Remove the cardboard packs from around yoghurt pots. Check the consume-by dates on the products you have bought. You should not exceed these.

ARRANGING FOOD IN YOUR REFRIGERATOR

The temperature inside your refrigerator is not uniform. Some areas are colder than others and you must store your food in the appropriate areas according to their type to ensure that they can be kept safely.

Leave a space between the food items to allow the air to circulate freely and avoid different products contaminating each other. Do not put packages and food in contact with the wall at the back of the appliance, this is a particularly cold and damp area of the appliance and water droplets and frost condense there as part of your refrigerator's normal operation.

The coldest area, indicated by the logo, is designed for delicate, sensitive and highly perishable food: meat, poultry, fish, cooked meats, prepared dishes, ready-made salads, egg or cream-based dishes and pastries, fresh pasta, pastry, pizza/quiches, fresh produce and raw milk cheese, ready-to-use vegetables sold in plastic bags and, more generally, any fresh product whose consume-by date is linked to its storage at a temperature of +4°C or below.

AUTOMATIC DEFROSTING

The refrigerator section of your appliance defrosts fully automatically. The water created by defrosting flows to a collection tank situated over the motor.
The heat the motor releases evaporates the contents of this tank. It is quite normal for droplets of water or frost to appear on the wall at the back of your refrigerator. This is a particularly cold and damp area in your appliance and water droplets and frost condense out as part of your appliance's normal operation. This frost is removed regularly during your refrigerator's automatic defrosting phases.

FROZEN AND DEEP- FROZEN FOOD

Your domestic appliance enables you to freeze food, it lowers its core temperature rapidly and you can therefore keep it longer. Deep-freezing is an industrial process that is quicker and more intense that domestic freezing. The products you purchase from the shops are deep-frozen.

PREPARING FOOD FOR FREEZING

Attention:
Freezing does not sterilise. It is therefore important to observe some simple hygiene rules when preparing your food for freezing: wash your hands before you touch the food and clean the kitchen tools you have just used before using them again.

Only freeze fresh, good quality food. Refer to the table "Food Freezing Guide" to know which products you can freeze and how long youcan keep them.

Blanch fruit and vegetables before freezing them to preserve their colour, smell, taste and vitamins: plunge them in boiling water for few moments.
Divide the food you wish to freeze into small individual portions corresponding to one meal each. Small portions freeze quicker at their core.
Pack the food hermetically so that they do not lose their flavour or dry up. Use plastic bags, polyethylene film, aluminium foil or special freezer containers for this. If you are using plastic bags, compress them to eliminate the air before sealing them hermetically.

Attention:
Do not place bottles or jars containing liquids in the freezer unless they are only two-thirds full: freezing causes liquids to expand, which can cause the container to explode.

Note on each package:
-The freezing date
-The consume-by date
-The type of food contained
-The number of portions contained

If you are purchasing deep-frozen food, pick it up last when you are shopping.
Check that: :
- The packaging isn't damaged
- They are not covered in a layer of frost (which means that they have partially defrosted)

Pack them in an isothermic bag or in newspaper. Transport them quickly and store them immediately. Comply with the maximum storage dates shown on the pack. Your appliance has a **** freezer compartment, this enables you to keep deep-frozen food in an optimal manner.

FOOD FREEZING GUIDE

Fresh Meat

Product	Valid for
Lamb	8 months
Roast pork	5 months
Pork ribs	4 months
Boiled beef, roast beef	10 months
Beef steak, entrecote, veal	8 months
Veal steaks, cutlets	10 months
Minces meat	4 months
Giblets, offal	3 months
Sausages	2 months

Farmyard animals

Prepare them plucked, skinned, gutted, cut into pieces if neccessary, washed and rinsed

Product	Valid for
Duck	4 months
Rabbit	6 months
Boiling fowl	7 months
Goose	4 months
Chicken	10 months
Turkey	6 months
Giblets, offal	3 months

Game

Product	Valid for
Wild duck, woodcock, pheasant	8 months
Hare	6 months
Partridge, quail	8 months

Fish

Product	Valid for
Carp	2 months
Pike	
Turbot	
Salmon	
Mackerel	
Tench	
Trout	
Sea bream	3 months
Sole	

Cooked food

Product	Valid for
Sauce with meat juice	3 months
Tomato sauce	
Minestrone with vegetables	2 months
Lasagne	4 months
Roats	2 months
Calf's leg	1 month
Meat in sauce	3 months
Stewed game	2 months
Boiled fish, grilled or baked fish	2 months
Sweet pepers, aubergines, courgettes stuffed with meat	2 months
Mushrooms with garlic and parsley	2 months
Steamed spinach	2 months
Pizza	6 months

FOOD FREEZING GUIDE

Vegetables

We recommend that you blench the vegetables w ith steam.

Product	Validity
Asparagus	12 months
Cabbage, cauliflow er	6 months
Artichokes	12 months
Beans	
Green beans	
Mushrooms	
Aubergines	
Sw eet peppers	
Peas ,Tomatoes	
Parsley, basil	8 months
Spinach	12 months

Fruits

Fruit must be covered with sugar or syrup, as appropriate. The amount of sugar to use is around 250g for 1 kilo of fruit. Syrups are used in varying percentages; these are prepared by boiling sugared wa- ter. The various concentrations are as follows:
•30% solution, 450g of sugar per litre of water;
•40% solution, 650g of sugar per litre of water;
•50% solution, 800g of sugar per litre of water;
So that the fruit's colour does not change, place it in lemon juice before covering it with sugar or pour lemon juice into the syrup. The receptacles for the fruit to be frozen must remain in the refrigerator for one hour before being re-inserted into the freezer. The fruit must be completely covered in syrup

Product	Validity
Apricots	8 months
Pineapple	10 months
Oranges	
Cherries	
Straw berries	12 months
Melon	
Peaches	8 months
Grapefruit	12 months
Juice from citrus fruit	10 months
Plums	12 months
Grapes	
Bilberries, blackberries, blackcurrants, raspberries red currants	10 months

Bread

This can be kept for 2 months. Defrost in an oven set to 50°C, switching it on after inserting the bread.

Butter and cheese

Freeze butter and cheese by dividing them up into pieces for weekly consumption. Butter and hard cheese (e.g. Parmesan) can be kept for 8 months, other cheese 4 months. They must be defrosted in the refrigerator, keeping an eye on the condensation that forms on these products.

ARRANGING FOOD IN YOUR FREEZER

Do not put fresh food next to food that has already been frozen to avoid causing the frozen food to warm up.

Information:
The maximum weight of food that you can freeze over 24 hours is shown on the information plate (inside your appliance's refrigerator section near the bottom of the left-hand wall) under the heading: "CAPACITE DE CONGELATION/FREEZING CAPACITY (kg/24h)".

DEFROSTING FOOD

You can defrost food in five different ways:
- By putting them in your appliance's refrigerator section for several hours
- By leaving them to defrost gently at ambient temperature
- In a conventional oven at a very low temperature (40/50°C)
- In a microwave oven
- By cooking them immediately

Defrosting them in the refrigerator is the slowest but safest method.

Attention:
Never refreeze food once it has defrosted, even partially, without cooking it first.

We would advise you not to place any items you have just taken out of the freezer straight into your mouth (ice cream, ice cubes, etc.), they will be at a very low temperature and you risk frostbite. Avoid touching frozen or deep-frozen food with wet hands; you may stick to the food. We recommend that you only defrost food for immediate use.

AUTOMATIC FREEZER DEFROSTING

• Defrosting occurs fully automatically during operation; the defrost water is collected by the evaporating tray and evaporates automatically.

• The evaporating tray should be cleaned periodically to prevent the water from collecting on the bottom of the refrigerator. (see section “Product Description”)

CLEANING YOUR APPLIANCE

Attention:
Disconnect your appliance prior to performing any maintenance operation. Grasp the plug directly, instead of pulling on the power cable.

We recommend that you clean and disinfect your appliance regularly for improved hygiene and to keep your food completely safe.

Remove all the food from the freezer. Place it in isothermic bags or wrap it in newspaper and store it in a cool place.

Clean your appliance inside and out with a bicarbonate of soda solution (1 dessertspoon of bicarbonate to 4 litres of water). Do not use alcohol, scouring powder or detergents, which could damage the surfaces.

Danger:
Do not use a high-pressure steam cleaner. The very hot steam could damage the surfaces and the electrical circuits; you would expose yourself to a risk of electrocution.

Don't forget to clean the condenser from time to time: this is at the back of the appliance. Use a dry paintbrush to do this or, better yet, your vacuum cleaner.

The evaporating tray has to be cleaned regularly to avoid the water accumulation.Make sure the appliance is disconnected.
Take out the tray as indicated on the drawing. Clean it with some soap and water.

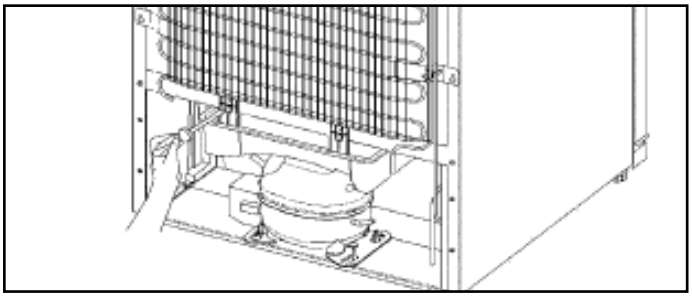

Reconnect your appliance, and adjust the refrigerator's thermostat if necessary, as shown in the section on "Adjusting your refrigerator's temperature Wait 3/4 of an hour before placing the food back in your appliance.

Professional expertise for the general public

To keep your appliance in good working order, we recommend that you use Clearit household products.
Clearit offers you professional products and adapted solutions for the daily upkeep of your household and kitchen appliances. You may find them in conventional retail outlets, along with a complete line of by-products and consumables.

CHANGING THE LIGHT BULB

Attention:
Disconnect your appliance before proceeding.

1. Unplug the appliance from the power supply, and place the refrigerator thermostat on “0”.
2. Remove the refrigerator light cover with a small screw driver, and take out the cover (A).
3. Change the present light bulb with a new one of not more than 15 W (B).
4. Replace the light cover and after waiting 5 minutes plug the unit.
5. Adjust the refrigerator thermostat on a working position.

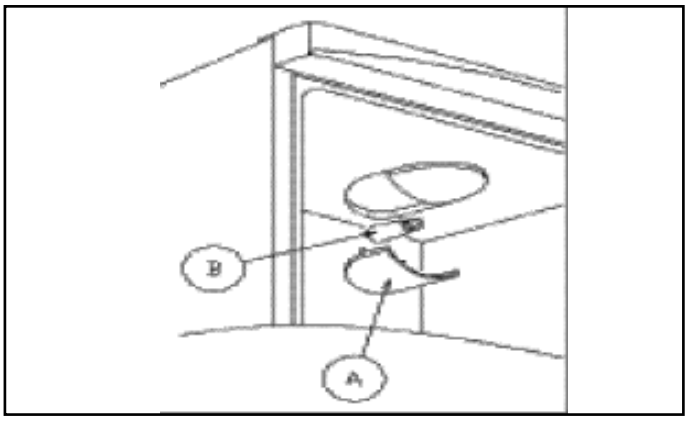

THIS APPLIANCE COMPLIES WITH EEC DIRECTIVES
73/23, 93/68, 89/336, 96/57, 92/31, 94/62

NORMAL OPERATING NOISES

So that the selected temperature remains constant, your appliance regularly switches off its motor. The resultant noises are quite normal operating noises. They reduce automatically as soon as your appliance reaches the desired temperature. These noises are as follows:

NOISE	CAUSE
Buzzing	Coming from the motor.This buzzing may briefly be louder when the motor starts.
Gargling or slight buzzing	Coming from circulation of the refrigerant in your freezer's pipes
Clicks	These can always be heard when the electronic card turns the motor on or off.

INCONVENIENCES OR MINOR BREAKDOWNS

Certain problems may appear when you are using your appliance. Before calling the after-sales service, use the guide below to see if you can resolve the problem yourself:

PROBLEM	ADVICE
Unusual noises	- Check the adjustement of the feet of your appliance and its stability. - Check that it is not touching a wall. - Check that all the movable parts (trays, racks, etc..) are securely in place.
The fridge and freezer does not get cold enough	- Check that the temperature is correctly set as indicated in the section on "Adjusting the temperature". - If you have put a large amount of foor in your fridge or freezer at one time, ensure that you readjust the temperature as shown in the section on "Adjusting the temperature". - Be careful not to open your appliance's door too often, and not to leave it open.
Your appliance does not get cold at all	- Check that your appliance is connected to the electrical supply. -Check that the circuit-breaker for your house has not cut out and that the fuse has not blown or been unscrewed
Frost forms inside your appliance	- Be careful not to open your appliance's door too often and not to leave it open.
Certains foods do not freeze completely	-This is quite normal for food that contains a lot of sugar, fat or alcohol not to freeze completely and to remain partially soft (ice cream, fruit juice,etc.).
Frozen meat has white streaks	- Check that your temperature is correctly set and is not at too low temperature (see the section on "Setting your freezer's temperature"). - Check that you haven't kept this meat too long in the freezer using the table you will find in the "Food Freezing Guide" section.
The door is difficult to open	- It is normal for the door to offer some resistance to being opened, particularly when you have just shut it: a slight underpressure forms in your appliance to ensure the door seals perfectly. All you have to do is wait a few seconds before re-opening.
The light does not work	- check that your appliance is connected to the electrical supply. - check that the circuit-breaker for your house has not cut out and that the fuse has not blown or been unscrewed. - check that the bulb has not burnt out, and refer to the section "changing the light bulb".

TECHNICAL ASSISTANCE DEPARTMENT

If you have already performed the indicated checks and your problem still persists, DO NOT ATTEMPT TO MAKE ANY REPAIRS YOURSELF. Contact your nearest Technical Assistance Department.
Any work on your appliance must be performed by a Brandt-accredited qualified professional. When you call, please mention the complete reference for your machine (model, type, serial number): this information is provided on your guarantee certificate and the information plate on your appliance.

ORIGINAL SPARE PARTS: when any maintenance work is being performed, ask that only certified original spare parts be used.