Commercial Refrigerator Service Manual

Under Counter Table / Series Salad / Dual Table Series

	KUR9-1	KUF9-1	KGR9-1	KHR9-1	KSR9-1
KUR12-2	KUF12-2	KGR12-2	KHR12-2	KSR12-2	KURF12-2
KUR15-2	KUF15-2	KGR15-2	KHR15-2	KSR15-2	KURF15-2
KUR18-3	KUF18-3	KGR18-3	KHR18-3	KSR18-3	KURF18-3

TABLE OF CONTENTS

Section 1 General Information 4

1-1. How to use Power Cord ? 4

1-2. How to disconnect the power cord? 4

Section 2 Installation Instructions 5

2-1. How to remove packing instructions 5

2-2. Location Product 6

Section 3 7

Product Instructions 7

3-1. EXPLODE VIEW 7

3-1-1. KUR 9-1 / KUF9-1/KGR9-1 Explode View 7

3-1-2. KHR 9-1 /KSR9-1 Explode View 8

3-1-3. KUR12-2/ KUF12-2/KGR12-2 Explode View 9

3-1-4. KHR12-2/KSR12-2 Explode View 10

3-1-5. KURF12-2 Explode View 12

3-1-6. KUR15-2/ KUF15-2/KGR15-2 Explode View 13

3-1-7. KHR15-2/KSR15-2 Explode View 14

3-1-8. KURF15-2 Explode View 15

3-1-9. KUR18-3/ KUF18-3/KGR18-3 Explode View 16

3-1-10. KHR18-3/KSR18-3 Explode View 17

3-1-11. KURF18-3Explode View 19

3-2. Wiring Diagram 20

3-2-1 (KUR 9-1, KUR12-2, KUR15-2, KUR18-3 KGR 9-1, KGR12-2, KGR15-2, KGR18-3) 20

3-2-2. Wiring Diagram (KUF 9-1, KUF12-2, KUF15-2, KUF18-3) 20

3-2-3. Wiring Diagram (KHR 9-1, KHR12-2, KHR15-2, KHR18-3 KSR 9-1, KSR12-2, KSR15-2, KSR18-3) 21

3-2-4. Wiring Diagram (KURF12-2, KURF15-2, KURF18-3) 21

3-4. PCB Control Instruction 22

3-3-1. Basic Operation 22
3-4. PCB Function Manual 23
3-4-1.How to set up manual defrost 23
3-4-2. How to remove the manual defrosting 23
3-4-3. How to set up the correction of inside temperature 24
3-4-4. Correction Temperature on Display PCB 24
3-4-5. Change Model 25
3-4-6. Change the defrost cycle 25
3-4-7. Change the deforst temperature 26
3-4-8. Change Temperature showing method 26
3-4-9. Control Eva fan motor 27
3-4-10. Verify Error Code 27
3-5. PCB function instructionDry –type model (REF / FRE) 28
3-6. COMPRESSOR running、starting、stopping 28
3-6-1. COMP running 28
Section 4 Replacement Of Main Components 29
4-1. Mullion Heater replacement 29
4-2. Cabinet Heater replacement 30
4-3. Refrigeration compartment replacement 32
4-4.Remove Counter Top 33
4-5.Remove Evap Motor 34
4-6.Remove Evaporator 35
Section 5 Customer Support 36
5-1. MAIN COMPONENTS 36
5-1-1.COMPRESSOR 36
5-1-2.COMPRESSOR RELAY, OVERLOAD 36
5-1-3.COMPRESSOR CAPACITOR 37

5-1-4.CONDENSER FAN MOTOR 37

5-1-5.EVAPORATOR FAN MOTOR 37

5-2. Filter Dryer 38

5-3. Defrost Heater 38

5-4. Thermal Fuse 38

5-5. Capillary Tube Spec 39

5-6. The cycle pressure of model starting (refrigerant weight) 39

5-7. Service Part list

Section 1　General Information

1-1. How to use Power Cord ?

1-1-1. Be sure not put more plug in the socket. Please use the dedicated outlet.
-Overheated wire, which will cause fire or start malfunction

1-1-2. Wet hands off the power.
- Life is in danger

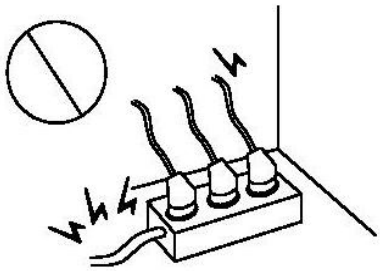
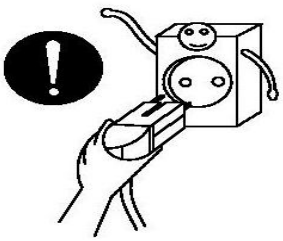
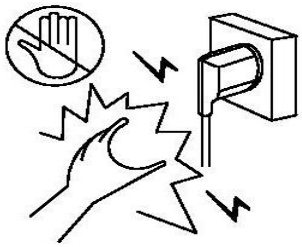

1-2. How to disconnect the power cord?

☞ To prohibit leakage or electric shock, please use the prescript method to connect ground.

1-2-1. If there are grounds connectors for 220v units, units don't need ground while outlet is for AC 220v. (Please make sure that there are grounds in buildings, then units can use AC 220v outlets with grounds connectors.)

1-2-2. The power is 220v without ground connector, use dedicated outlet to ground.

A. Please connect earth wire to copper, which will be covered under moisture ground. (The depth is more than 17cm)

- copper item : thickness : >0.7mm square: >900cm^2

B. Please connect the dedicated ground outlet.

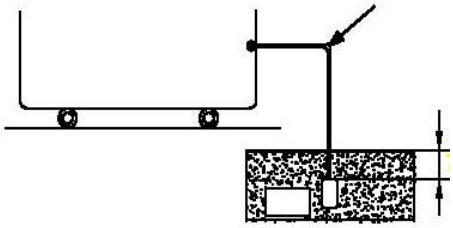
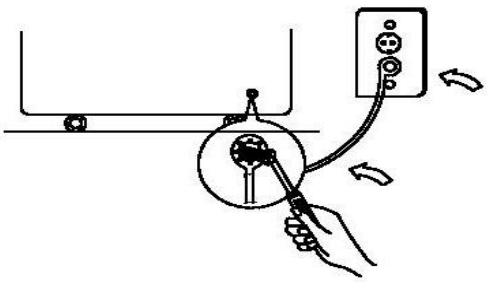

1-2-3. Prohibition ground places


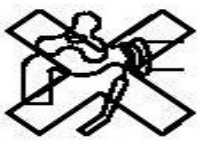
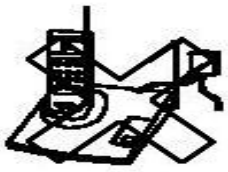

Gas pipe　　**Water-pipe**　　**Telephone lines**

Section 2　Installation Instructions

2-1. How to remove packing instructions

1	Please set doors of products towards the same direction, tie the packing stick with ropes.	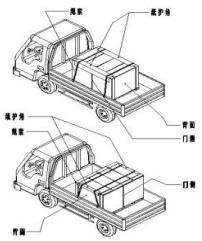
2	Please cut the PE bag, then remove the packing box.	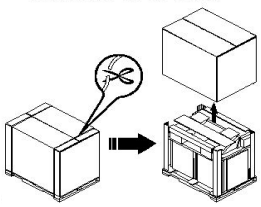
3	Please remove all the packing parts around the products.	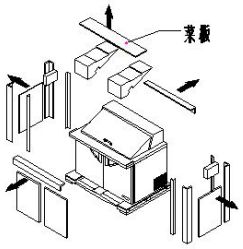
4	Lift up the product, disassemble four screws, then remove the packing base.	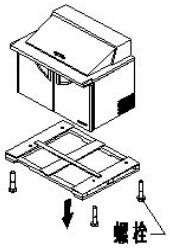
5	Install the fours casters, insert the kitchen board into the slot.	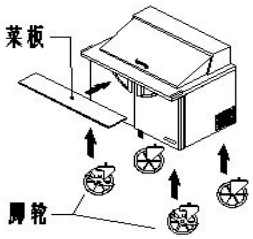
6	Caution: 1> Please use dedicated outlet. 2> Please let the unit is grounded while you work. 3> Please connect the power with leakage protector.	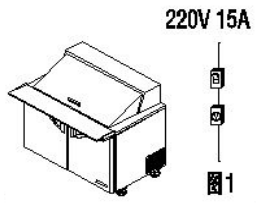

2-2. Location Product

1	Be sure to set the unit in door! To prevent damage, leakage!	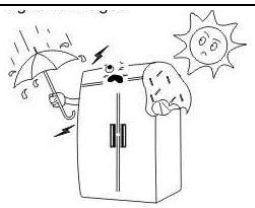
2	Be sure that the location be chosen has a strong enough floor to support total weight of the cabinet and any other contents. The uneven will make noise and shake!	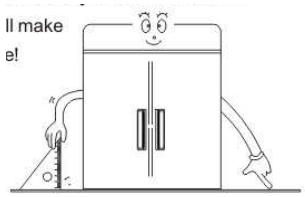
3	Be sure to avoid corrosive environment! It will shorten the life of the unit	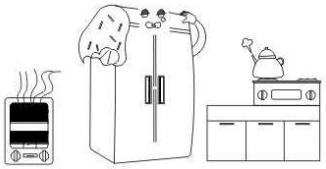
4	Be sure no object is on top of the product! The objects will fall to hit the unit!	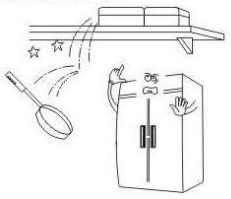
5	Be sure to avoid damp and dusty environment! Electric shock	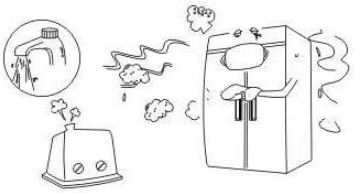
6	Be sure the unit is away from the wall at least 15 ㎝! Good air circulation	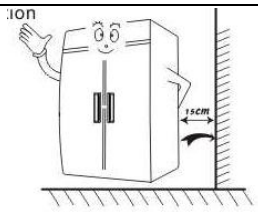
7	Be sure the power cord is connected to the proper voltage! The Product is special for 220V It can't be used with the voltage of 110V Please connect the power with leakage protector!	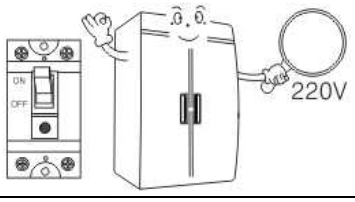
8	Please use the casters or legs.	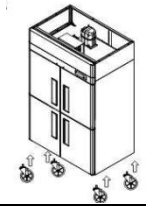

Section 3

Product Instructions

3-1. EXPLODE VIEW

3-1-1. KUR 9-1 / KUF9-1/KGR9-1 Explode View

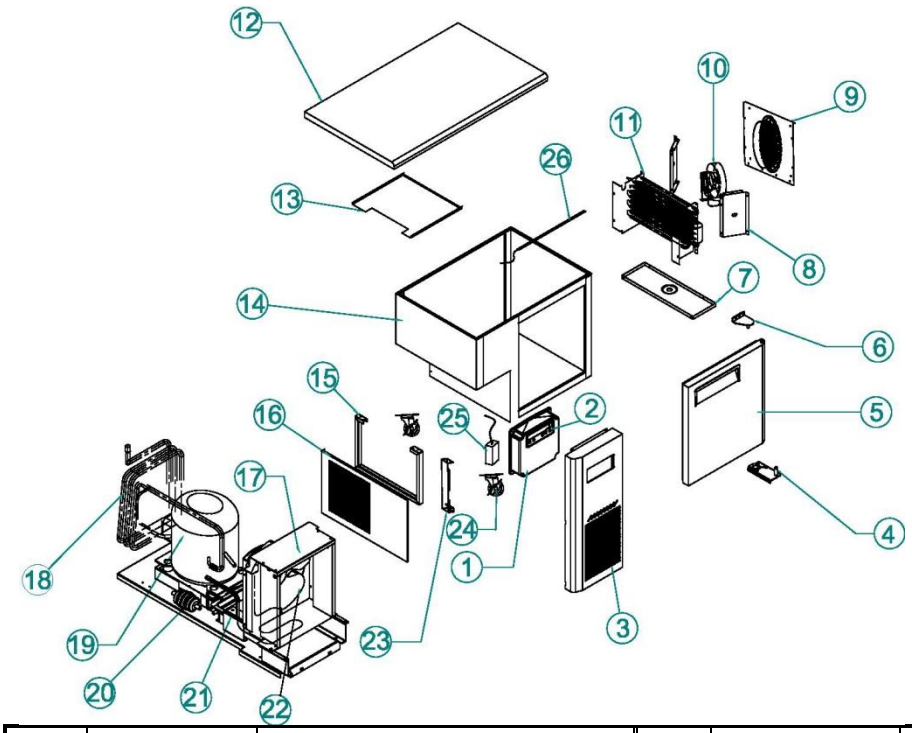

NO	Part Cord	Part Name	No	Part Cord	Part Name
1	KR81410400	MAIN PCB	14	KU91100100	CABINET ASSY
2	KR81410300	FRONT PCB	15	KR92100302	UNIT BRACKET
3	KR81410704	UNIT FRONT COVER	16	KR81900104	UNIT SAID COVER
4	KR89910100	BOTTOM HINGE（R）	17	KF24900105	CONDENSER ASSYREF
	30229M0405	BOTTOM HINGE（R）GLASS			
5	KR5AF00102	DOOR（R）_1500	18	KF84900105	CONDENSER ASSYFRE
	JG5AF00206	ASS'Y GLASS DOOR R		KR94200109	SUCTION PIPE(B)REF
6	KR89910402	TOP HINGE（R）	19	KR84200109	SUCTION PIPE(B)FRE
	M722900108	TOP HINGE（R）GLASS		G2R5700200	COMP REF LX110 REF
7	KR91800201	EVAP DRAIN GUIDE	20	G5R5700200	COMP FRE LX125 FRE
				BR84100100	FILTER DRYER
8	KR91800102	AIR GUIDE(L/R)	21	M729300102	DRAIN PAN
9	KF81700100	EVA DUCT	22	G8F5000200	CONDENSER FAN OTOR
10	G8F5000100	EVA FAN MOTOR	23	KF82100208	UNIT SIDE BRACKET(A)
11	DK9A100103	EVAP-ASSY(공용)	24	K3F3200901	LEVEL FOOT&CASTER
12	KR9FF00100	COUNTER TOP	25	KG81200100	SMPS
13	KF85220305	EVA FAN AIR GUIDE	26	KG99600102	LED LAMP

3-1-2. KHR 9-1 /KSR9-1 Explode View

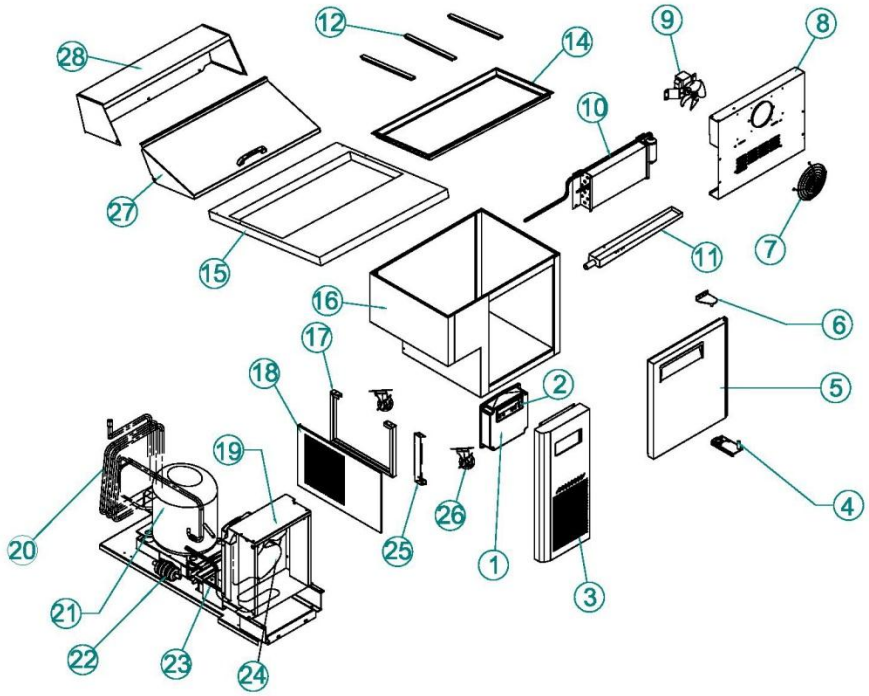

KHR9-1

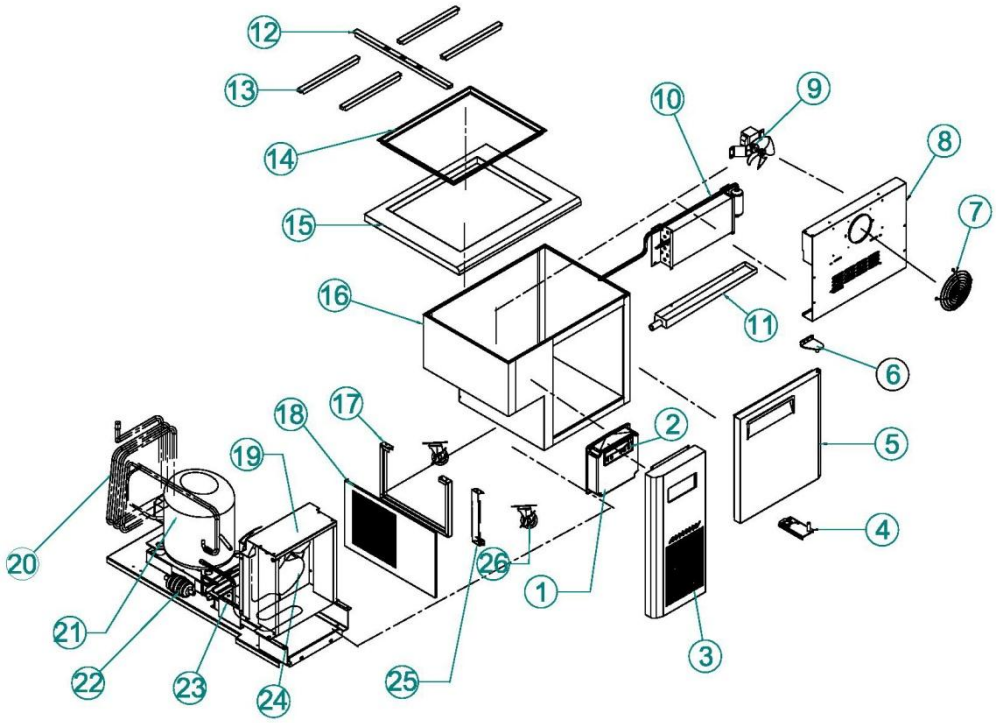

KSR9-1

No	Part Cord	Part Name	No	Part Cord	Part Name
1	KR81410400	MAIN PCB	16	BR9AB00100	CABINET ASSY
2	KR81410300	FRONT PCB	17	KR92100302	UNIT BRACKET
3	KR81410704	UNIT FRONT COVER	18	KR81900104	UNIT SAID COVER
4	KR89910100	BOTTOM HINGE（R）	19	KF24900105	CONDENSER ASSY 9 12 15
5	KR5AF00102	DOOR（R）_1500		KF84900105	CONDENSER ASSY 18
6	KR89910402	TOP HINGE（R）	20	BR94200206	SUCTION PIPE(B)
7	U609000103	FAN COVER	21	G2R5700200	COMP REF LX110 9 12 15
8	BR91H00100	EVA DUCT KHR		G5R5700200	COMP FRE LX125 18
	BR91700106	EVA DUCT KSR	22	BR84100100	FILTER DRYER
9	CM25000101	EVA FAN MOTOR	23	M729300102	DRAIN PAN
10	BR9AD00103	EVAP-ASSY	24	G8F5000200	CONDENSER FAN MOTOR
11	BR91900103	EVA DRAIN GUIDE	25	KF82100208	UNIT SIDE BRACKET(A)
12	S722500104	PAN GUIDE	26	K3F3200901	LEVEL FOOT&CASTER
	BR81800400	PAN GUIDE	27	S728900302	HOOD LID
13	BR81800301	PAN GUIDE	28	S725600501	HOOD
14	BS90900100	PAN SUPPORTER KHR			
	BR91800200	PAN SUPPORTER KSR			
15	BS9FE00100	COUNTER TOP KHR			
	BR9FF00100	COUNTER TOP KSR			

3-1-3. KUR12-2/ KUF12-2/KGR12-2 Explode View

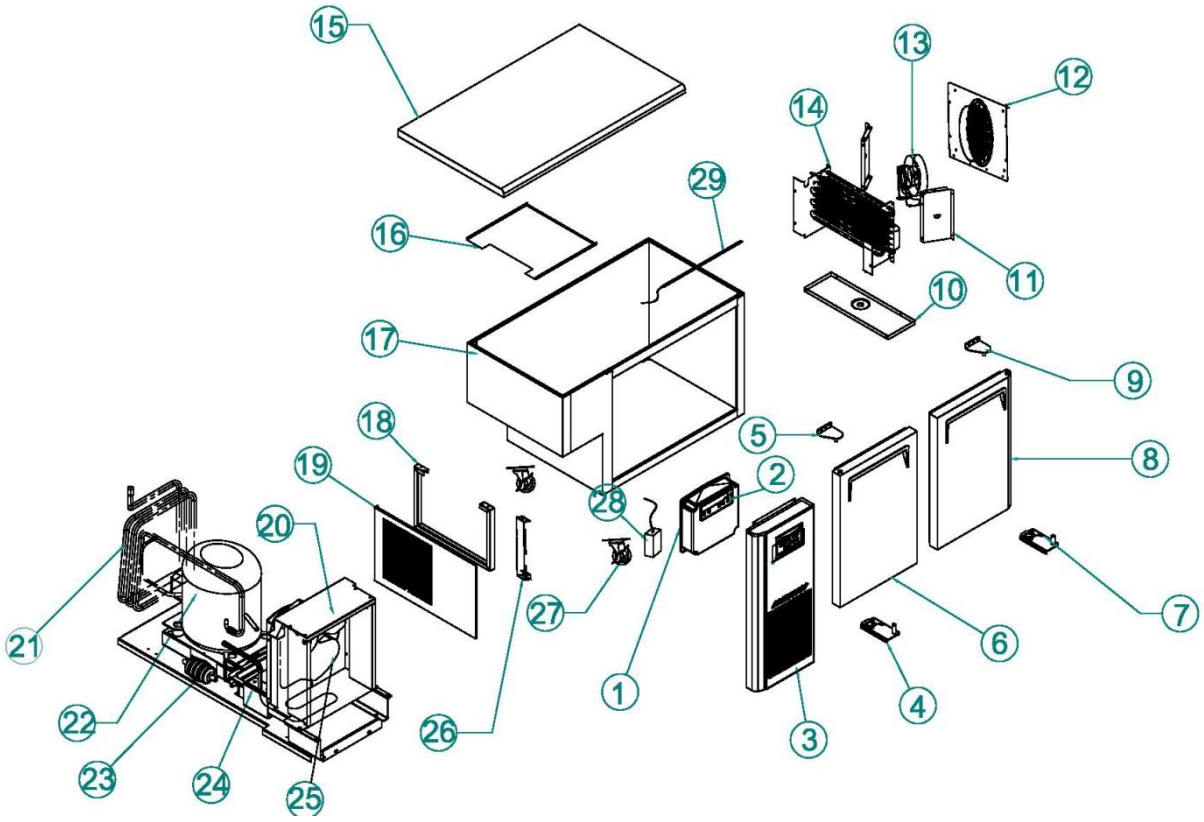

No	Part Cord	Part Name	No	Part Cord	Part Name
1	KR81410400	MAIN PCB	14	DK84400107	EVAP ASSY FRE
2	KR81410300	FRONT PCB	15	KR2FF00100	COUNTER TOP
3	KR81410704	UNIT FRONT COVER	16	KF85220305	EVAP FAN AIR GUIDE
4	KR89940100	BOTTOM HINGE (L)	17	KU21000100	CABINET ASSY
	30229M0305	BOTTOM HINGE (L) GLASS	18	KR92100301	UNIT BRACKET
5	KR89910302	TOP HINGE (L)	19	KR81900104	UNIT SAID COVER
	M722900208	TOP HINGE (L) GLASS	20	KF24900105	CONDENSER ASSY REF
6	KR2AF00202	DOOR (L) _1200		KF84900105	CONDENSER ASSY FRE
	JG2AF00105	ASS'Y GLASS DOOR L	21	KR94200109	SUCTION PIPE(B) REF
7	KR89910100	BOTTOM HINGE (R)		KR84200109	SUCTION PIPE(B) FRE
	30229M0405	BOTTOM HINGE（R）GLASS	22	G2R5700200	COMP LX110 REF
8	KR2AF00102	DOOR (R) _1200		G5R5700200	COMP LX125 FRE
	JG2AF00205	ASS'Y GLASS DOOR R	23	BR84100100	DRYER
9	KR89910402	TOP HINGE (R)	24	M729300102	DRAIN PAN
	M722900108	TOP HINGE（R）GLASS	25	G8F5000200	CONDENSER FAN MOTOR
10	KR91800201	EVAP DRAIN GUIDE	26	KF82100208	UNIT BRACKET(A)
11	KR91800102	AIR GUIDE(L/R)	27	K3F3200901	LEVEL FOOT&CASTER
12	KF81700100	EVA DUCT	28	KG81200100	SMPS
13	G8F5000100	EVA FAN MOTOR	29	KG99600102	LED LAMP
14	DK9A100103	EVAPASSY REF			

3-1-4. KHR12-2/KSR12-2 Explode View

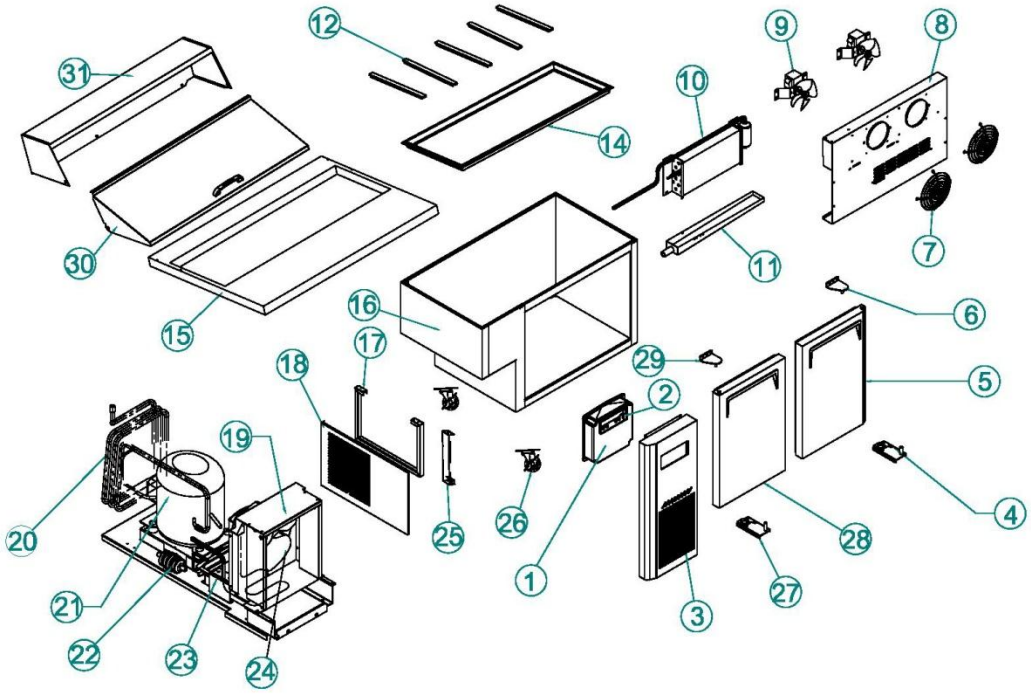

KHR12-2

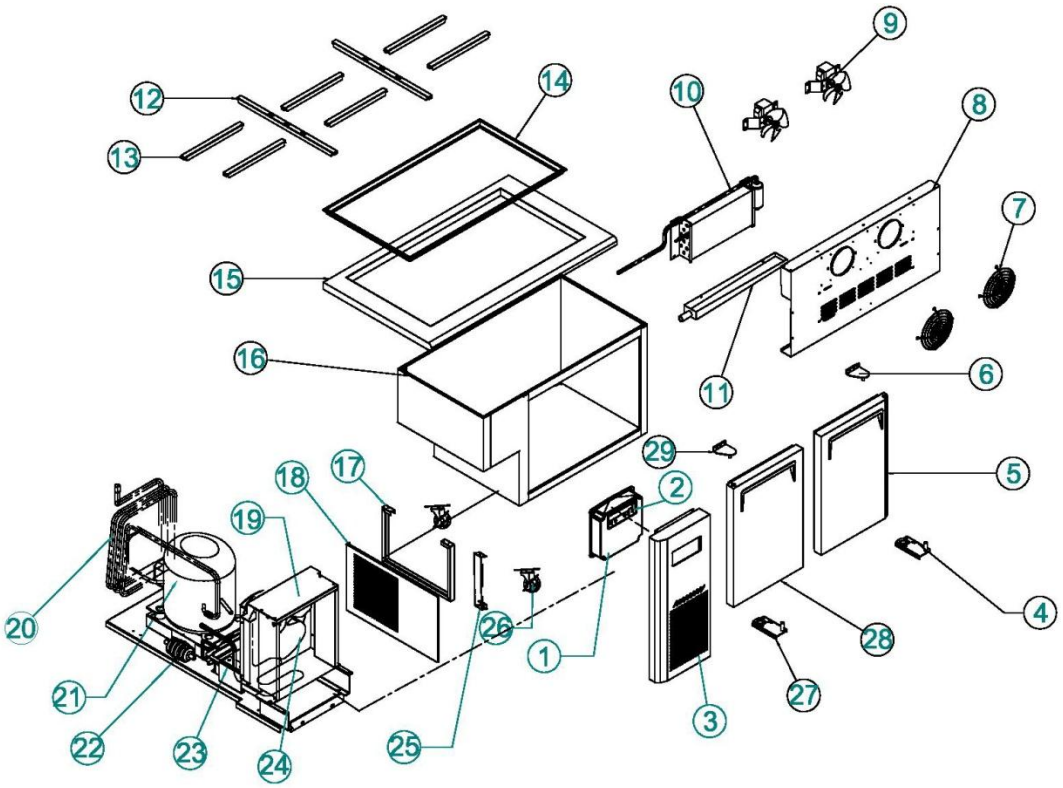

KSR12-2

No	Part Cord	Part Name	No	Part Cord	Part Name
1	KR81410400	MAIN PCB	16	BR2AB00100	CABINET ASSY
2	KR81410300	FRONT PCB	17	KR92100302	UNIT BRACKET
3	KR81410704	UNIT FRONT COVER	18	KR81900104	UNIT SAID COVER
4	KR89910100	BOTTOM HINGE（R）	19	KF24900105	CONDENSER ASSY REF
5	KR2AF00102	DOOR（R）_1200		KF84900105	CONDENSER ASSY FRE
6	KR89910402	TOP HINGE（R）	20	BR24200105	SUCTION PIPE(B) 12 15
7	U609000103	FAN COVER	21	G2R5700200	COMP REF LX110 REF
8	BR21H00100	EVA DUCT KHR		G5R5700200	COMP FRE LX125 FRE
	BR21700107	EVA DUCT KSR	22	BR84100100	FILTER DRYER
9	CM25000101	EVA FAN MOTOR	23	M729300102	DRAIN PAN
10	BR2AD00103	EVAP-ASSY	24	G8F5000200	CONDENSER FAN OTOR
11	BR21900104	EVA DRAIN GUIDE	25	KF82100208	UNIT SIDE BRACKET(A)
12	S722500104	PAN GUIDE	26	K3F3200901	LEVEL FOOT&CASTER
	BR81800400	PAN GUIDE	27	KR89940100	BOTTOM HINGE (L)
13	BR81800301	PAN GUIDE	28	KR2AF00202	DOOR (L) _1200
14	BS20900100	PAN SUPPORTER KHR	29	KR89910302	TOP HINGE (L)
	BR21800200	PAN SUPPORTER KSR	30	S488900302	HOOD LID
15	BS2FE00100	COUNTER TOP KHR	31	S485600202	HOOD
	BR2FF00100	COUNTER TOP KSR			

3-1-5. KURF12-2 Explode View

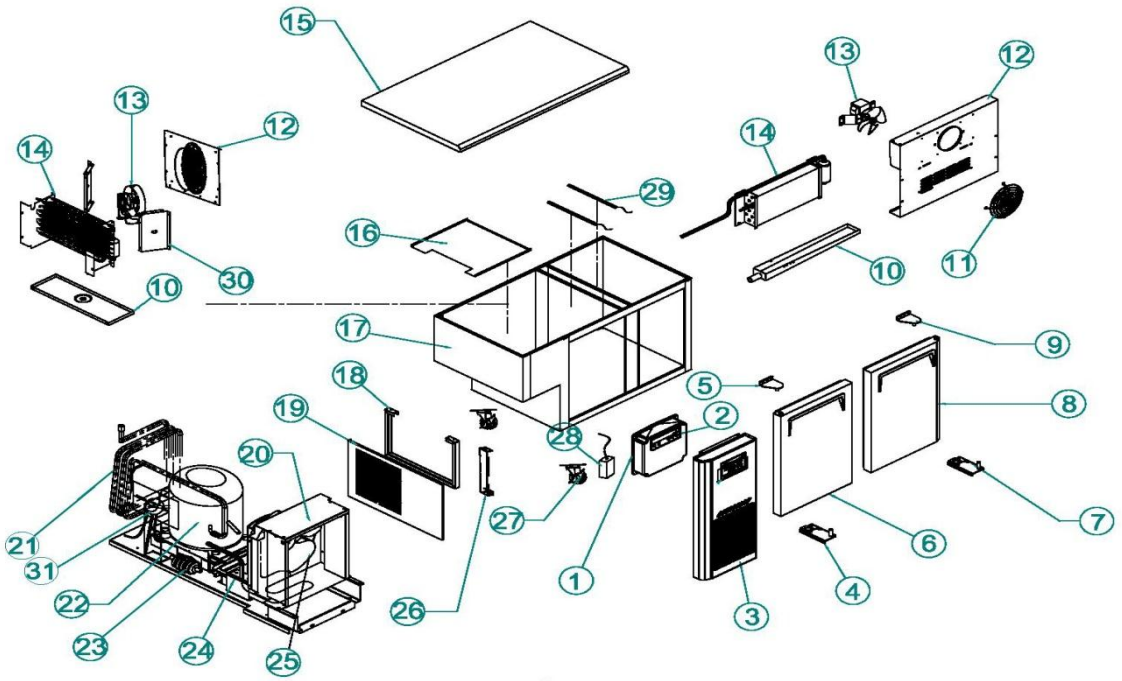

No	Part Cord	Part Name	No	Part Cord	Part Name
1	KRF2500700	MAIN PCB	15	KR2FF00100	COUNTER TOP
2	KRF2500600	FRONT PCB	16	KF85220305	EVAP FAN AIR GUIDE
3	KR81410704	UNIT FRONT COVER	17	KRF2000100	CABINET ASSY
4	KR89940100	BOTTOM HINGE (L)	18	KR92100301	UNIT BRACKET
5	KR89910302	TOP HINGE (L)	19	KR81900104	UNIT SAID COVER
6	KR2AF00202	DOOR (L) _1200	20	KF84900105	CONDENSER ASSY
7	KR89910100	BOTTOM HINGE (R)	21	KRF2600201	SUCTION PIPE(B)
8	KR2AF00102	DOOR (R) _1200	22	G5R5700200	COMP LX125
9	KR89910402	TOP HINGE (R)	23	BR84100100	DRYER
10	KRF2900100	EVA DRAIN GUIDE REF	24	M729300102	DRAIN PAN
	KR91800203	EVA DRAIN GUIDE FRE	25	G8F5000200	CONDENSER FAN MOTOR
11	U609000103	FAN COVER REF	26	KF82100208	UNIT BRACKET(A)
12	KRF2100400	EVAP DUCT REF	27	K3F3200901	LEVEL FOOT&CASTER
	KF81700104	EVAP DUCT FRE	28	KG81200100	SMPS
13	CM25000101	EVA FAN MOTOR REF	29	KG99600102	LED LAMP
	G8F5000100	EVA FAN MOTOR FRE	30	KR91800102	AIR GUIDE(L/R)
14	KRF1222100	EVAP ASSY REF	31	K1D6900100	STRING MOTOR
	DK9AI00104	EVAP ASSY FRE			

3-1-6. KUR15-2/ KUF15-2/KGR15-2 Explode View

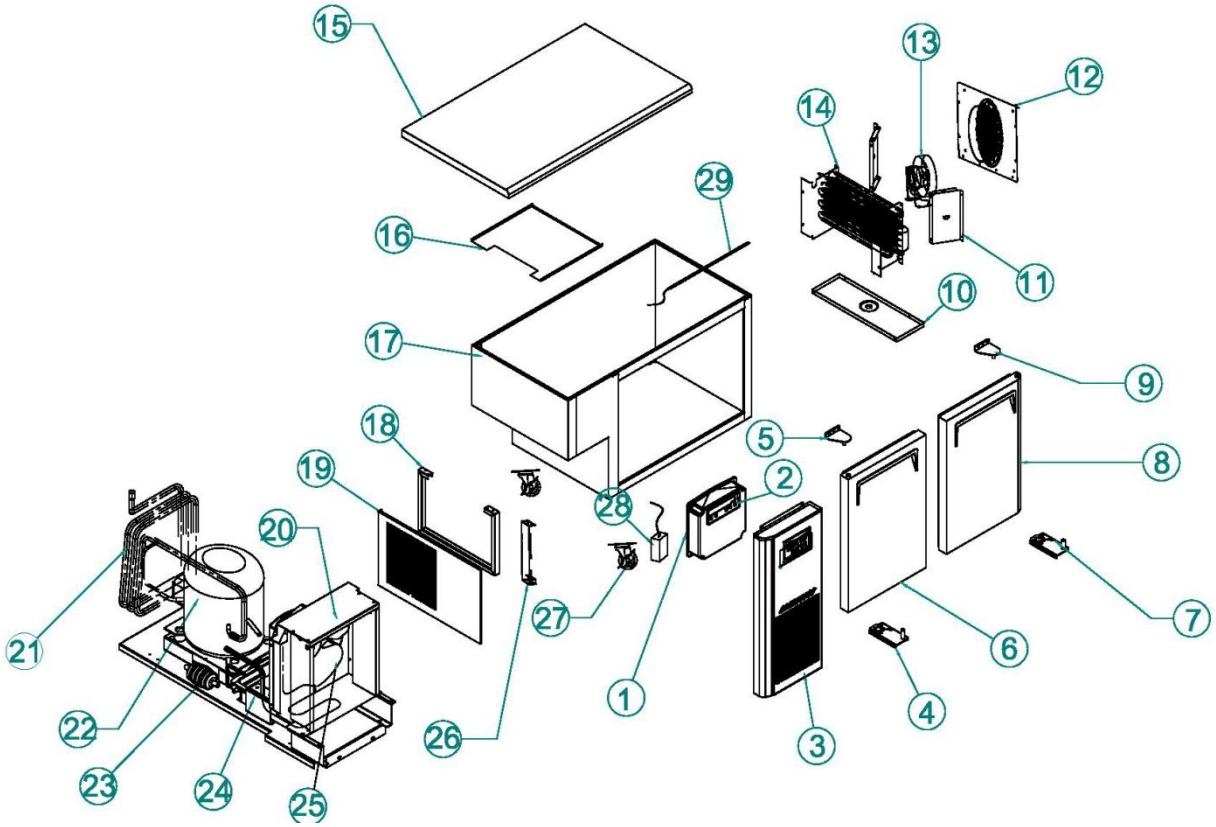

No	Part Cord	Part Name	No	Part Cord	Part Name
1	KR81410400	MAIN PCB	14	DK84400107	EVAP ASSY FRE
2	KR81410300	FRONT PCB	15	KR2FF00100	COUNTER TOP
3	KR81410704	UNIT FRONT COVER	16	KF85220305	EVAP FAN AIR GUIDE
4	KR89940100	BOTTOM HINGE (L)	17	KU21000100	CABINET ASSY
	30229M0305	BOTTOM HINGE (L) GLASS	18	KR92100301	UNIT BRACKET
5	KR89910302	TOP HINGE (L)	19	KR81900104	UNIT SAID COVER
	M722900208	TOP HINGE (L) GLASS	20	KF24900105	CONDENSER ASSY REF
6	KR5AF00202	DOOR (L) _1500		KF84900105	CONDENSER ASSY FRE
	JG5AF00105	ASS'Y GLASS DOOR L	21	KR94200109	SUCTION PIPE(B) REF
7	KR89910100	BOTTOM HINGE (R)		KR84200109	SUCTION PIPE(B) FRE
	30229M0405	BOTTOM HINGE（R）GLASS	22	G2R5700200	COMP LX110 REF
8	KR5AF00102	DOOR (R) _1500		G5R5700200	COMP LX125 FRE
	JG5AF00205	ASS'Y GLASS DOOR R	23	BR84100100	DRYER
9	KR89910402	TOP HINGE (R)	24	M729300102	DRAIN PAN
	M722900108	TOP HINGE（R）GLASS	25	G8F5000200	CONDENSER FAN MOTOR
10	KR91800201	EVAP DRAIN GUIDE	26	KF82100208	UNIT BRACKET(A)
11	KR91800102	AIR GUIDE(L/R)	27	K3F3200901	LEVEL FOOT&CASTER
12	KF81700100	EVA DUCT	28	KG81200100	SMPS
13	G8F5000100	EVA FAN MOTOR	29	KG59600102	LED LAMP
14	DK9A100103	EVAPASSY REF			

3-1-7. KHR15-2/KSR15-2 Explode View

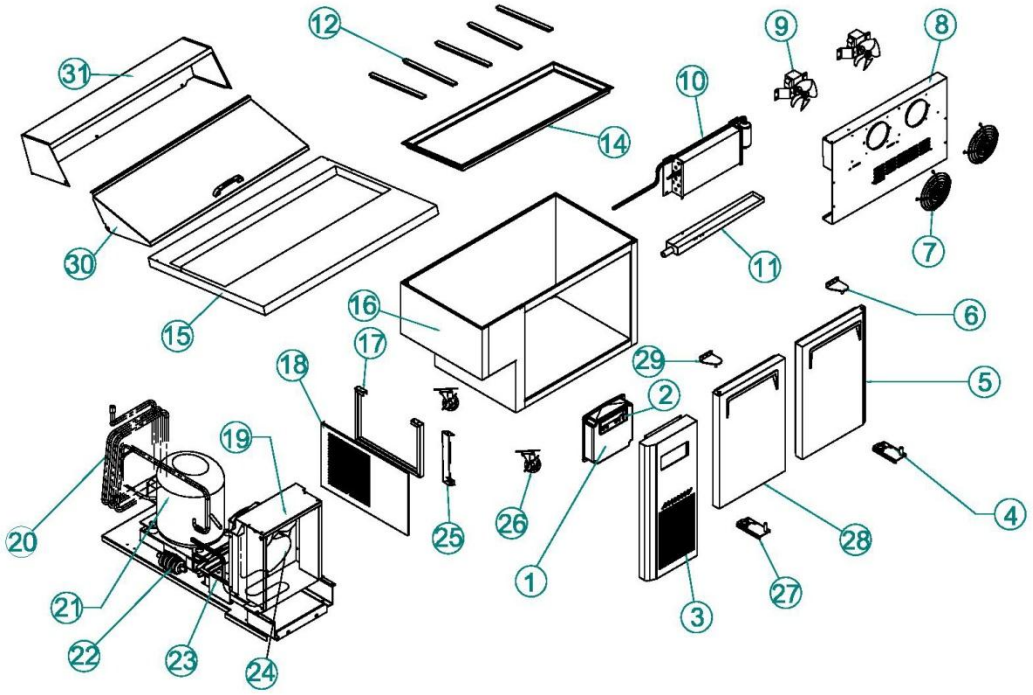

KHR15-2

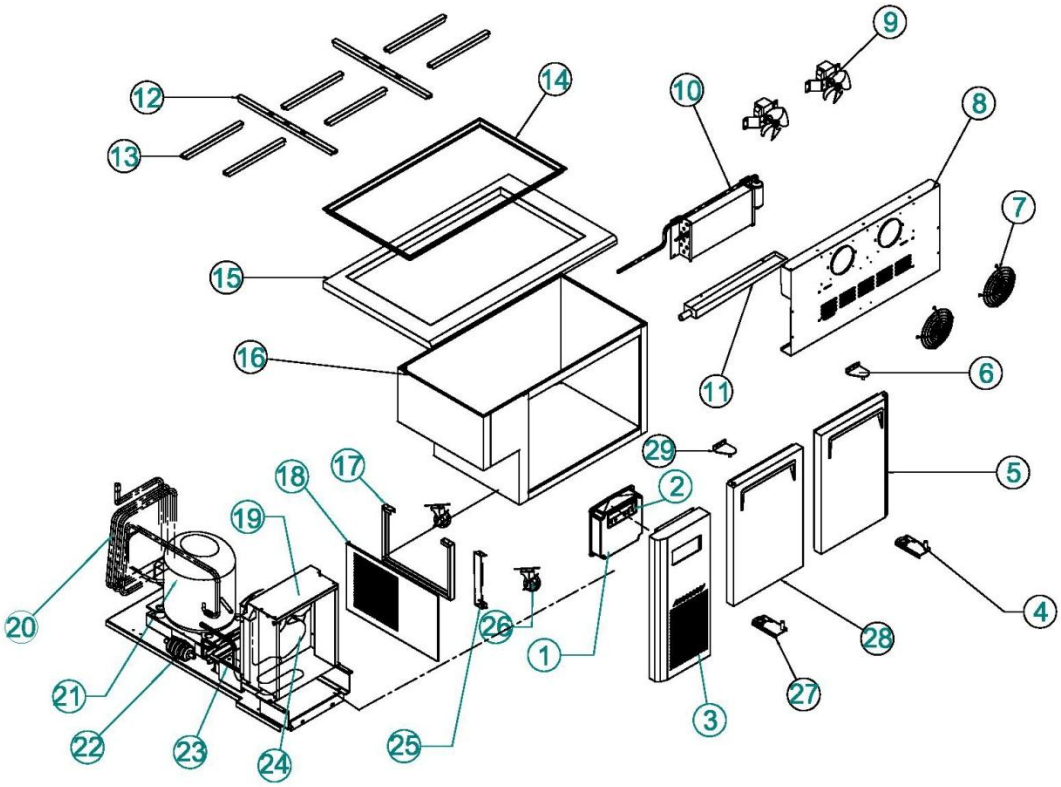

KSR15-2

No	Part Cord	Part Name	No	Part Cord	Part Name
1	KR81410400	MAIN PCB	16	BR5AB00100	CABINET ASSY
2	KR81410300	FRONT PCB	17	KR92100302	UNIT BRACKET
3	KR81410704	UNIT FRONT COVER	18	KR81900104	UNIT SAID COVER
4	KR89910100	BOTTOM HINGE（R）	19	KF24900105	CONDENSER ASSY REF
5	KR5AF00102	DOOR（R）_1500	19	KF84900105	CONDENSER ASSY FRE

6	KR89910402	TOP HINGE（R）	20	BR24200105	SUCTION PIPE(B) 12 15
7	U609000103	FAN COVER	21	G2R5700200	COMP REF LX110 REF
8	BR51H00100	EVA DUCT KHR		G5R5700200	COMP FRE LX125 FRE
	BR51700108	EVA DUCT KSR	22	BR84100100	FILTER DRYER
9	CM25000101	EVA FAN MOTOR	23	M729300102	DRAIN PAN
10	BR2AD00103	EVAP-ASSY	24	G8F5000200	CONDENSER FAN OTOR
11	BR21900104	EVA DRAIN GUIDE	25	KF82100208	UNIT SIDE BRACKET(A)
12	S722500104	PAN GUIDE	26	K3F3200901	LEVEL FOOT&CASTER
	BR81800400	PAN GUIDE	27	KR89940100	BOTTOM HINGE (L)
13	BR81800301	PAN GUIDE	28	KR5AF00202	DOOR (L) _1500
14	BS50900100	PAN SUPPORTER KHR	29	KR89910302	TOP HINGE (L)
	BR51800200	PAN SUPPORTER KSR	30	BS50200100	HOOD LID
15	BS5FE00100	COUNTER TOP KHR	31	BS50100100	HOOD
	BR5FF00100	COUNTER TOP KSR			

3-1-8. KURF15-2 Explode View

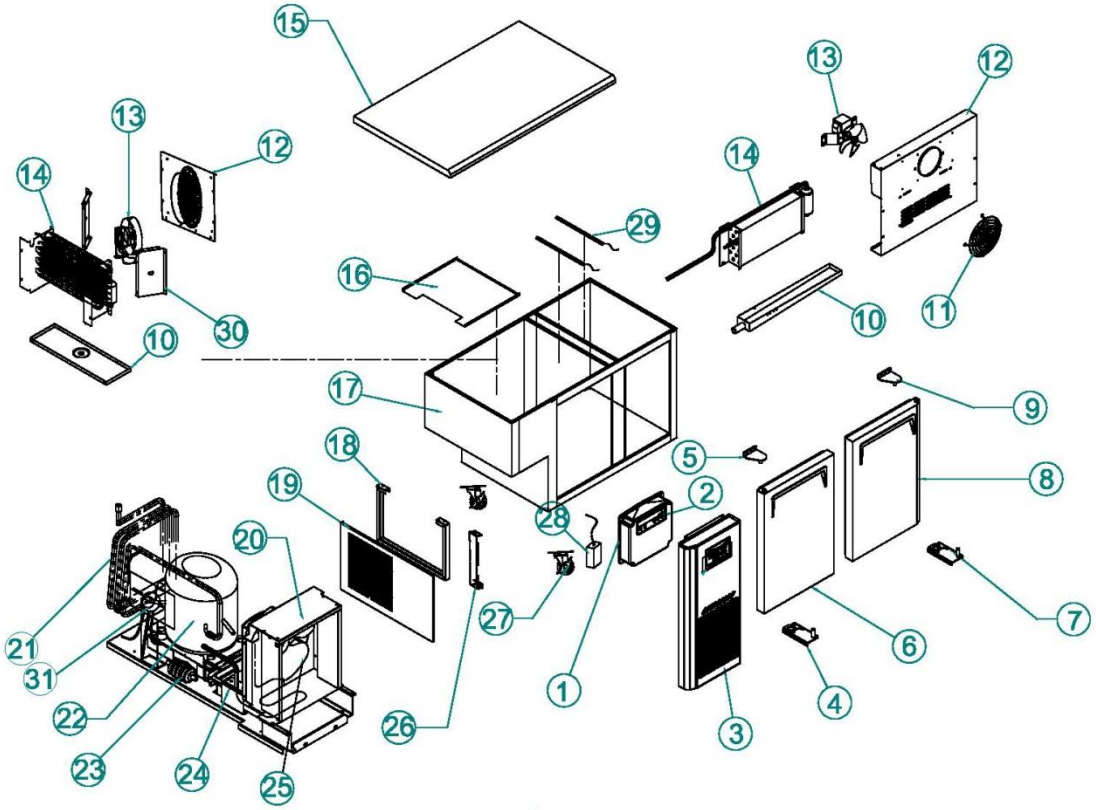

No	Part Cord	Part Name	No	Part Cord	Part Name
1	KRF2500700	MAIN PCB	15	KR5FF00100	COUNTER TOP
2	KRF2500600	FRONT PCB	16	KF85220305	EVAP FAN AIR GUIDE
3	KR81410704	UNIT FRONT COVER	17	KRF5000100	CABINET ASSY
4	KR89940100	BOTTOM HINGE (L)	18	KR92100301	UNIT BRACKET
5	KR89910302	TOP HINGE (L)	19	KR81900104	UNIT SAID COVER

6	KR5AF00202	DOOR (L) _1500	20	KF84900105	CONDENSER ASSY
7	KR89910100	BOTTOM HINGE (R)	21	KRF2600201	SUCTION PIPE(B)
8	KR5AF00102	DOOR (R) _1500	22		NEK2150GK
9	KR89910402	TOP HINGE (R)	23	BR84100100	DRYER
10	KRF5900100	EVA DRAIN GUIDE REF	24	M729300102	DRAIN PAN
	KR91800203	EVA DRAIN GUIDE FRE	25	G8F5000200	CONDENSER FAN MOTOR
11	U609000103	FAN COVER REF	26	KF82100208	UNIT BRACKET(A)
12	KRF5200400	EVAP DUCT REF	27	K3F3200901	LEVEL FOOT&CASTER
	KF81700104	EVAP DUCT FRE	28	KG81200100	SMPS
13	CM25000101	EVA FAN MOTOR REF	29	KG99600102	LED LAMP
	G8F5000100	EVA FAN MOTOR FRE	30	KR91800102	AIR GUIDE(L/R)
14	KRF1522100	EVAP ASSY REF	31	K1D6900100	STRING MOTOR
	DK9AI00104	EVAP ASSY FRE			

3-1-9. KUR18-3/ KUF18-3/KGR18-3 Explode View

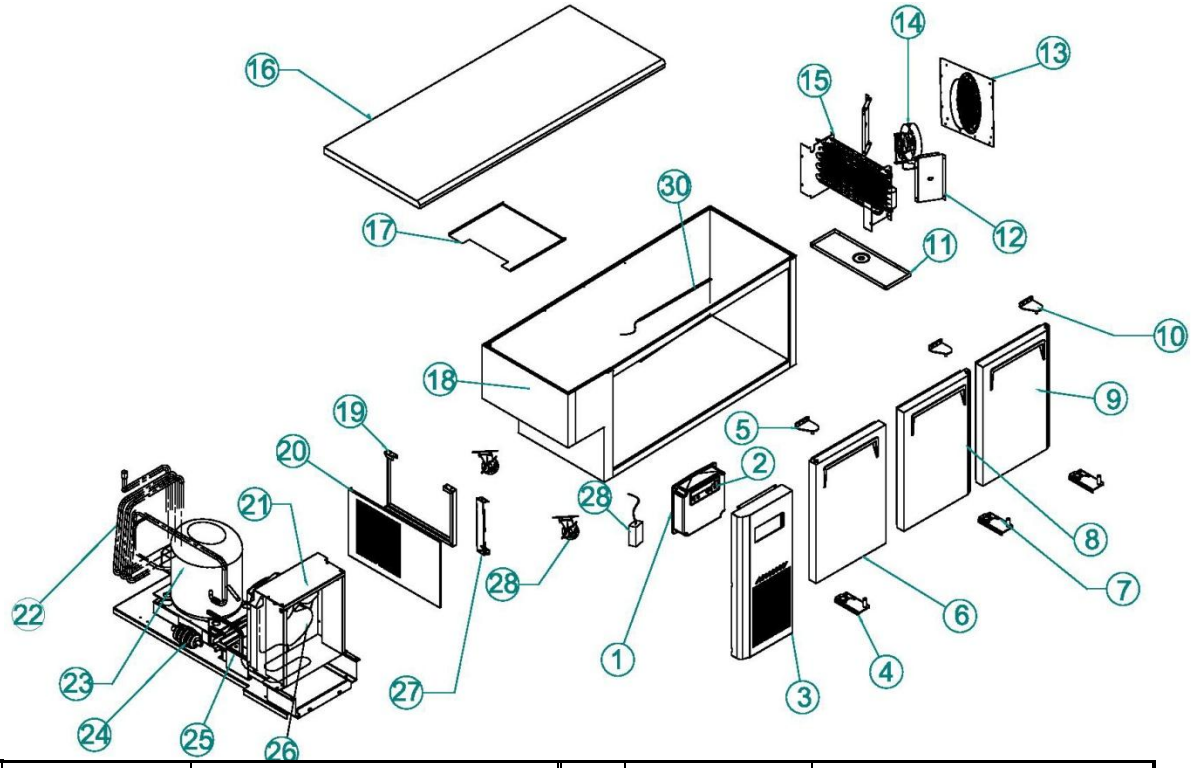

No	Part Cord	Part Name	No	Part Cord	Part Name
1	KR81410400	MAIN PCB	15	DK84400107	EVAP ASSY FRE
2	KR81410300	FRONT PCB	16	KR8FF00100	COUNTER TOP
3	KR81410704	UNIT FRONT COVER	17	KF85220305	EVAP FAN AIR GUIDE
4	KR89940100	BOTTOM HINGE (L)	18	KU81000100	CABINET ASSY
	30229M0305	BOTTOM HINGE (L) GLASS	19	KR92100301	UNIT BRACKET
5	KR89910302	TOP HINGE (L)	20	KR81900104	UNIT SAID COVER
	M722900208	TOP HINGE (L) GLASS	21	KF84900104	CONDENSER ASSY
6	KR8AF00202	DOOR（L）_1800	22	KR94200109	SUCTION PIPE(B) REF
	JG8AF00105	ASS'Y GLASS DOOR L		KR74200103	SUCTION PIPE(B) FRE
7	KR89910100	BOTTOM HINGE (R)	23	G5R5700200	COMP LX125 REF

	30229M0405	BOTTOM HINGE（R）GLASS			COMP NEK2150GK FRE
8	KR8AF00302	DOOR_1800（M）	24	BR84100100	DRYER
	JG8AF00205	ASS'Y GLASS DOOR R	25	M729300102	DRAIN PAN
9	M722900106	DOOR_1800（R）	26	G8F5000200	CONDENSER FAN MOTOR
	JG8AF00205	ASS'Y GLASS DOOR R	27	KF82100208	UNIT BRACKET(A)
10	KR89910402	TOP HINGE (R)	28	K3F3200901	LEVEL FOOT&CASTER
	M722900108	TOP HINGE（R）GLASS	29	KG81200100	SMPS
11	KR91800201	EVAP DRAIN GUIDE	30	KG89600102	LED LAMP
12	KR91800102	AIR GUIDE(L/R)			
13	KF81700100	EVA DUCT			
14	G8F5000100	EVA FAN MOTOR			
15	DK8A100104	EVAP ASSY REF			

3-1-10. KHR18-3/KSR18-3 Explode View

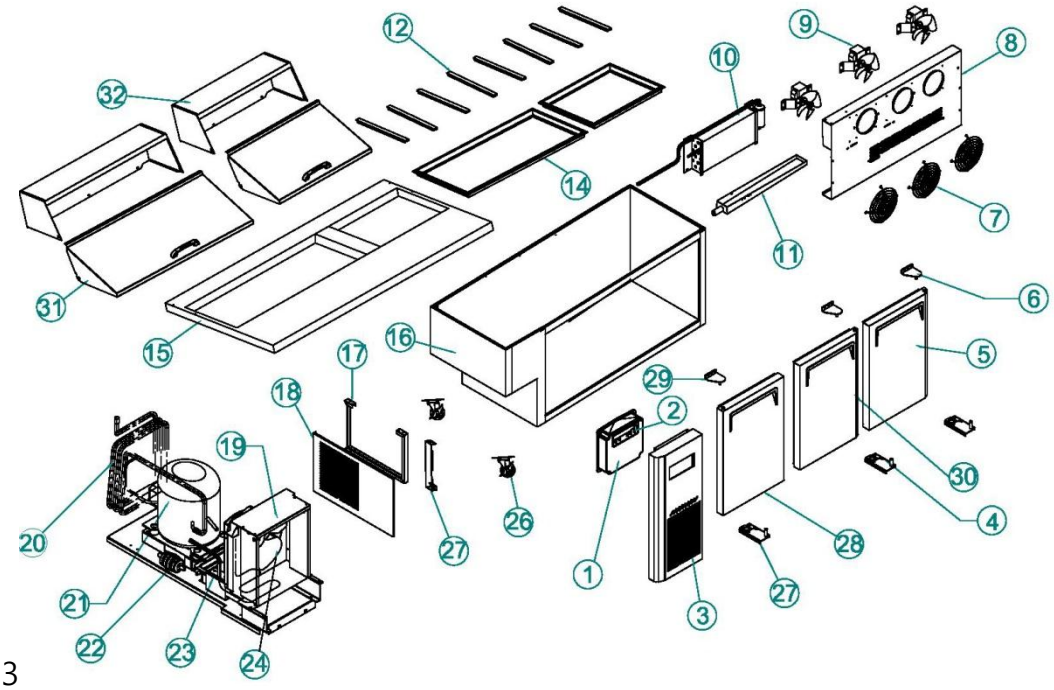

KHR18-3

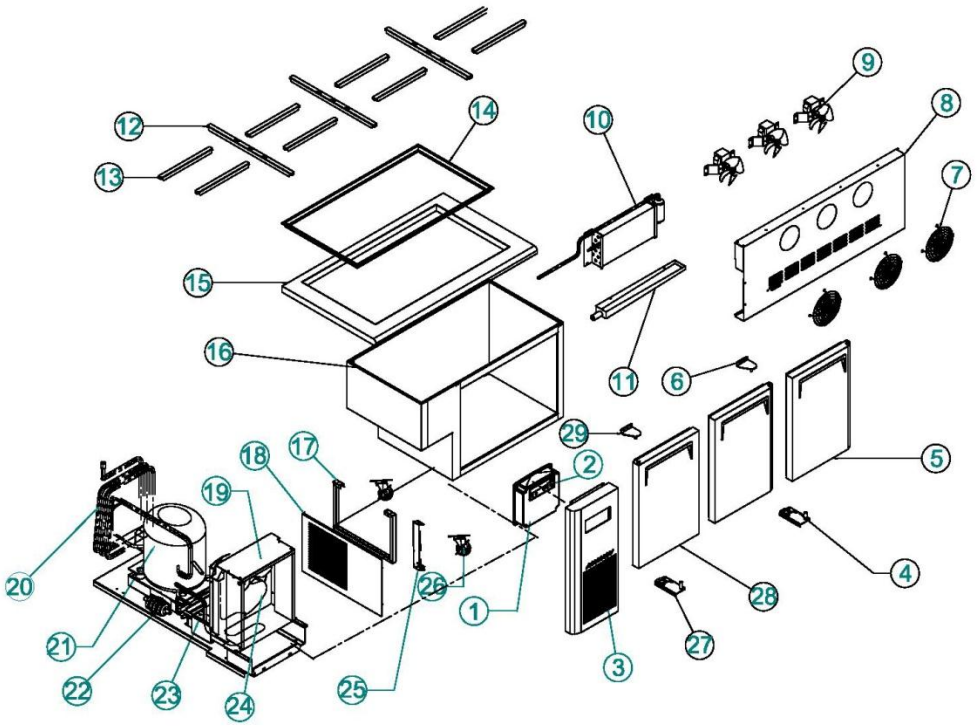

KSR18-3

No	Part Cord	Part Name	No	Part Cord	Part Name
1	KR81410400	MAIN PCB	16	BR8AB00100	CABINET ASSY
2	KR81410300	FRONT PCB	17	KR92100302	UNIT BRACKET
3	KR81410704	UNIT FRONT COVER	18	KR81900104	UNIT SAID COVER
4	KR89910100	BOTTOM HINGE（R）	19	KF24900105	CONDENSER ASSY REF
5	KR8AF00102	DOOR（R）_1200		KF84900105	CONDENSER ASSY FRE
6	KR89910402	TOP HINGE（R）	20	BR84200105	SUCTION PIPE(B) 18
7	U609000103	FAN COVER	21	G2R5700200	COMP REF LX110 REF
8	BR81H00100	EVA DUCT KHR		G5R5700200	COMP FRE LX125 FRE
	BR81700106	EVA DUCT KSR	22	BR84100100	FILTER DRYER
9	CM25000101	EVA FAN MOTOR	23	M729300102	DRAIN PAN
10	BR8AD00103	EVAP-ASSY	24	G8F5000200	CONDENSER FAN OTOR
11	BR81900103	EVA DRAIN GUIDE	25	KF82100208	UNIT SIDE BRACKET(A)
12	S722500104	PAN GUIDE	26	K3F3200901	LEVEL FOOT&CASTER
	BR81800400	PAN GUIDE	27	KR89940100	BOTTOM HINGE (L)
13	BR81800301	PAN GUIDE	28	KR8AF00202	DOOR (L) _1800
14	BS80900100	PAN SUPPORTER KHR	29	KR89910302	TOP HINGE (L)
	BR81800200	PAN SUPPORTER KSR	30	KR8AF00302	DOOR (M) _1800
15	BS8FE00100	COUNTER TOP KHR	31	S488900302	HOOD LID
				S728900302	HOOD LID
	BR8FF00100	COUNTER TOP KSR	32	S485600202	HOOD
				S725600501	HOOD

3-1-11. KURF18-3Explode View

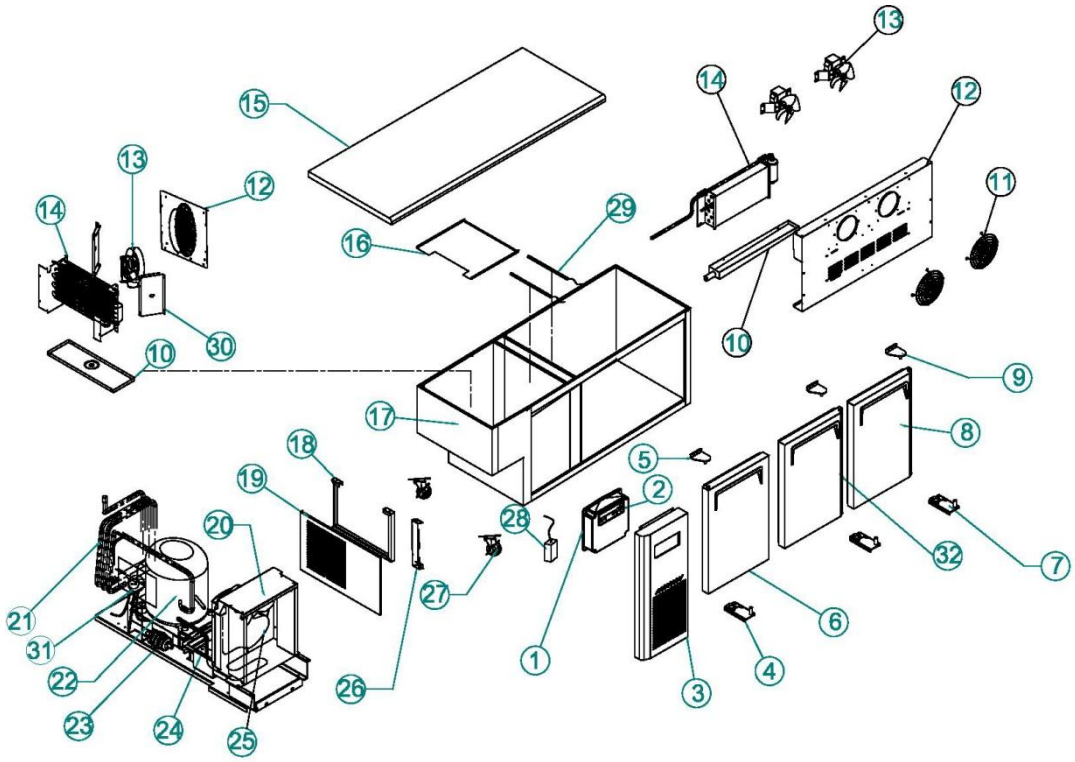

No	Part Cord	Part Name	No	Part Cord	Part Name
1	KRF2500700	MAIN PCB	16	KF85220305	EVAP FAN AIR GUIDE
2	KRF2500600	FRONT PCB	17	KRF8000100	CABINET ASSY
3	KR81410704	UNIT FRONT COVER	18	KR92100301	UNIT BRACKET
4	KR89940100	BOTTOM HINGE (L)	19	KR81900104	UNIT SAID COVER
5	KR89910302	TOP HINGE (L)	20	KF84900105	CONDENSER ASSY
6	KR8AF00202	DOOR (L) _1800	21	KRF2600201	SUCTION PIPE(B)
7	KR89910100	BOTTOM HINGE (R)	22		NEK2150GK
8	KR8AF00102	DOOR (R) _1800	23	BR84100100	DRYER
9	KR89910402	TOP HINGE (R)	24	M729300102	DRAIN PAN
10	BR91900101	EVA DRAIN GUIDE REF	25	G8F5000200	CONDENSER FAN MOTOR
	KR91800203	EVA DRAIN GUIDE FRE	26	KF82100208	UNIT BRACKET(A)
11	U609000103	FAN COVER REF	27	K3F3200901	LEVEL FOOT&CASTER
12	KRF8100600	EVAP DUCT REF	28	KG81200100	SMPS
	KF81700104	EVAP DUCT FRE	29	KG99600102	LED LAMP FRE
13	CM25000101	EVA FAN MOTOR REF		KG59600102	LED LAMP REF
	G8F5000100	EVA FAN MOTOR FRE	30	KR91800102	AIR GUIDE(L/R)
14	KRF1822100	EVAP ASSY REF	31	K1D6900100	STRING MOTOR
	DK9AI00104	EVAP ASSY FRE	32	KR8AF00302	DOOR (M) _1800
15	KR8FF00100	COUNTER TOP			

3-2. Wiring Diagram

3-2-1 (KUR 9-1, KUR12-2, KUR15-2, KUR18-3 KGR 9-1, KGR12-2, KGR15-2, KGR18-3)

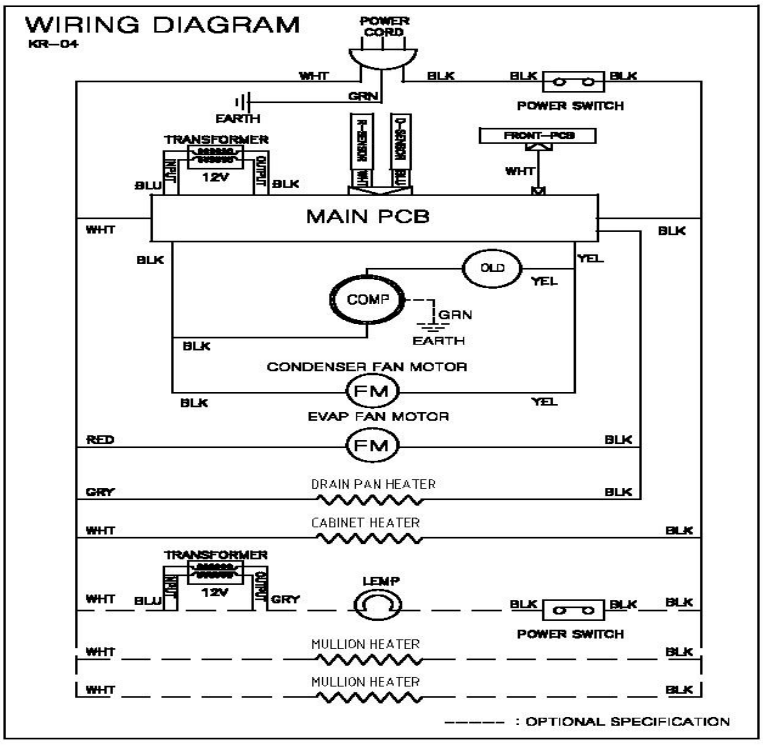

3-2-2. Wiring Diagram (KUF 9-1, KUF12-2, KUF15-2, KUF18-3)

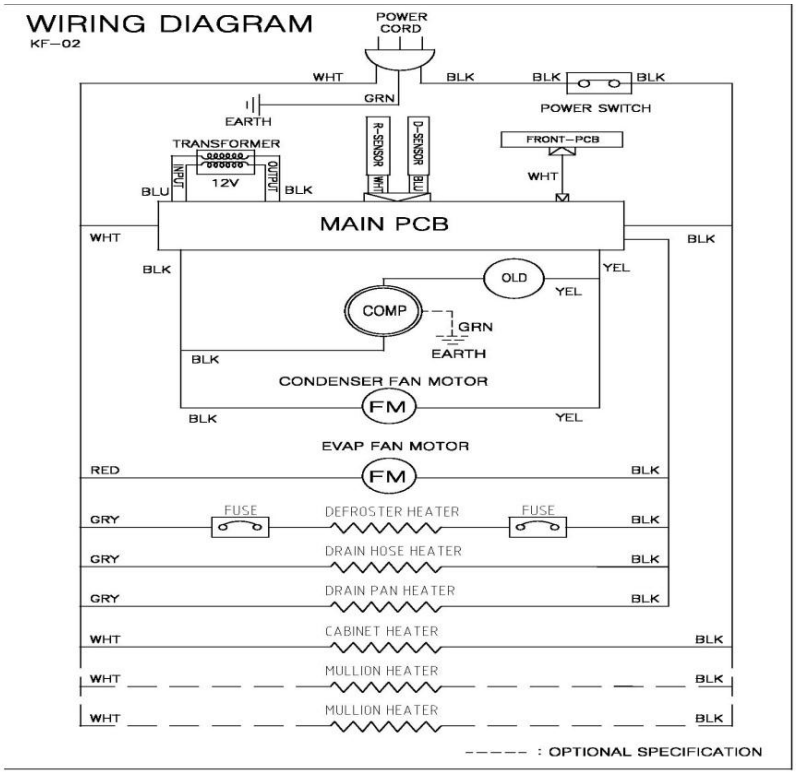

3-2-3. Wiring Diagram (KHR 9-1, KHR12-2, KHR15-2, KHR18-3 KSR 9-1, KSR12-2, KSR15-2, KSR18-3)

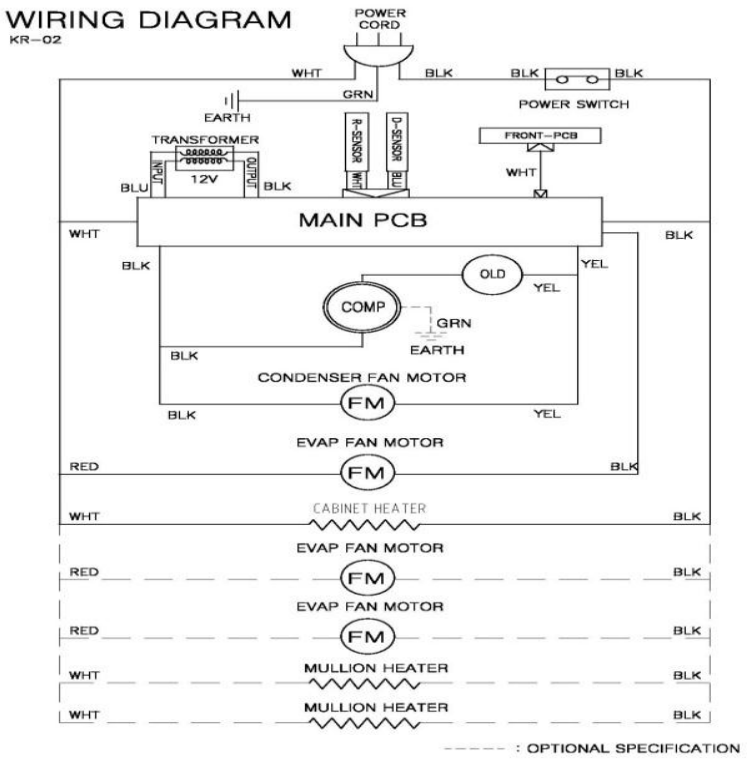

3-2-4. Wiring Diagram (KURF12-2, KURF15-2, KURF18-3)

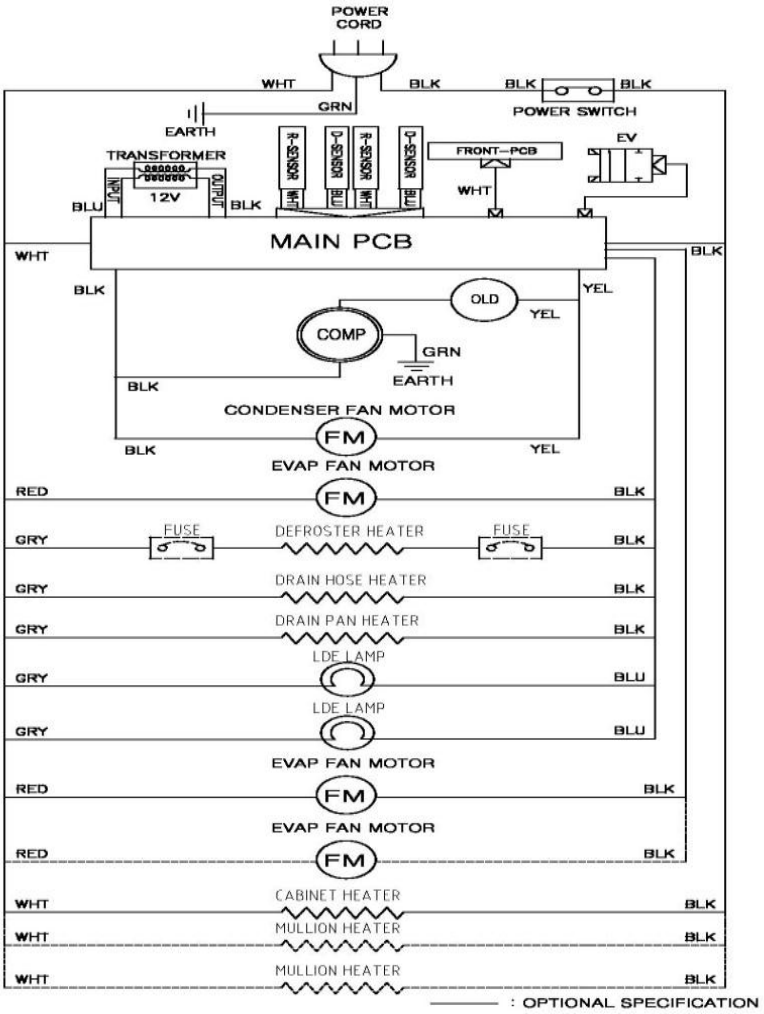

3-4. PCB Control Instruction

3-3-1. Basic Operation

1) Plug in and the Display panel will be lighted and make a beep sound.
   The compressor will begin to run.
2) The compressor is automatically cycled by the electronic controller (PCB).
3) The Defrost cycle is automatically controlled by the PCB.
4) Good Air Flow in refrigerator unit is critical.
   Be careful to load product so that it neither presses against the back wall, nor reaches within four inches from the evaporator compartment.

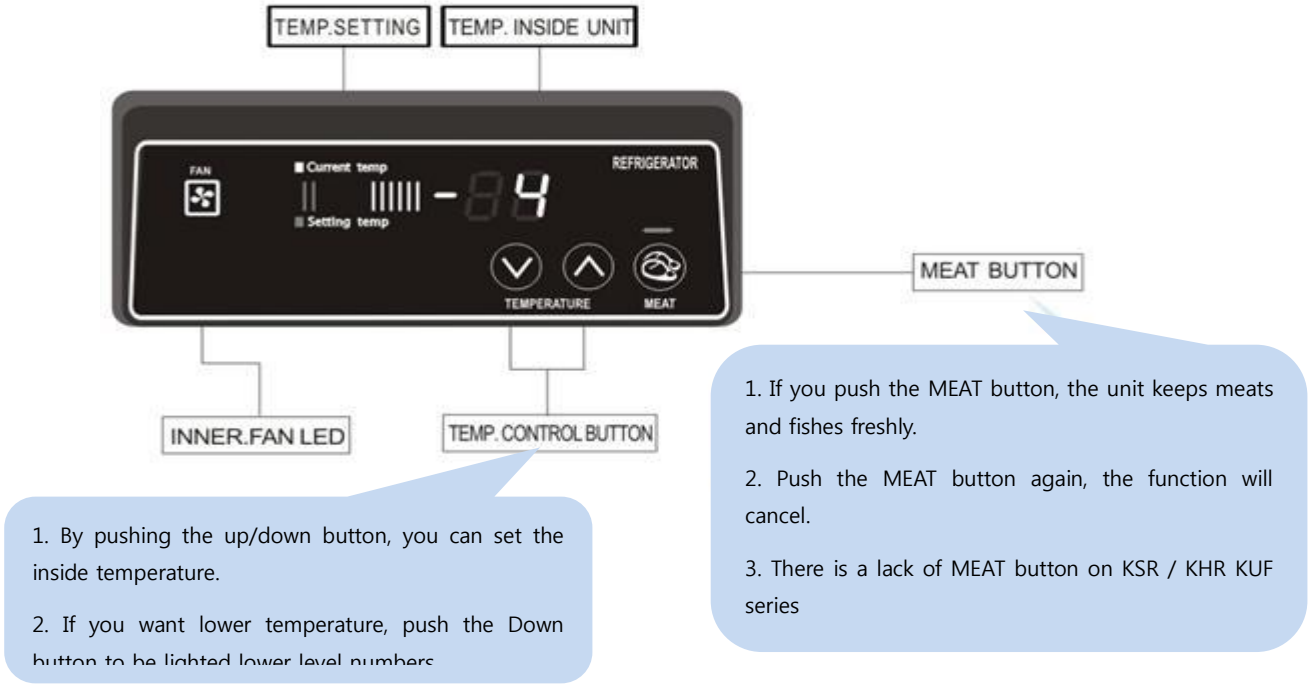

5) When the inside temperature is lower than -45℃, the panel will display "LO".



6)Higher than +18℃, the panel will display "HI".



3-4. PCB Function Manual

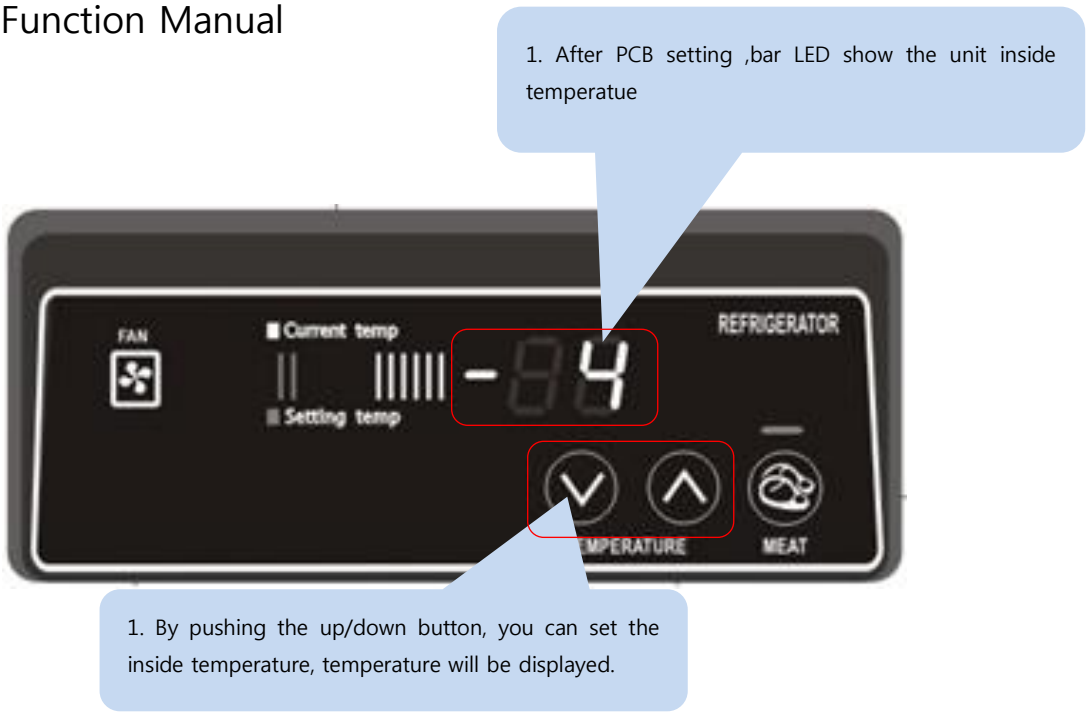

3-4-1.How to set up manual defrost

Cancel the frosting function of evaporator.

STEP	OPERATION	DISPLAY	RESULT
Step 1	Push the ▼ ▲ button Five seconds.	SL	
Step 2	Push the ▼button once	dS	
Step 3	Push the ▼button once	dF	Start manual defrost

The shortest defrosting time is twenty minutes, the longest defrosting time is 40 minutes.

3-4-2. How to remove the manual defrosting

STEP	OPERATION	DISPLAY	RESULT
Step 1	Push the ▼ ▲ button Five seconds.	SL	
Step 2	Push the ▼button once	dS	
Step 3	Push the ▼button once	2	It will indicated the current inner temperature.

3-4-3. How to set up the correction of inside temperature

STEP	OPERATION	DISPLAY	RESULT
Step 1	Push the ▼ ▲ button Five seconds.		
Step 2	Push the ▼button twice time.		
			Now is the setting value.
Step 3	Push the ▲ button When changed	Setting value	Reference Table1

Table 1

Display	Description	Display	Description	Memo
"00"	**unchangeable**	" 50"	5.0℃ ↑	
"- 5"	0.5℃ ↓	" 45"	4.5℃ ↑	
"-10"	1.0℃ ↓	" 40"	4.0℃ ↑	
"-15"	1.5℃ ↓	" 35"	3.5℃ ↑	
"-20"	2.0℃ ↓	" 30"	3.0℃ ↑	
"-25"	2.5℃ ↓	" 25"	2.5℃ ↑	
"-30"	3.0℃ ↓	" 20"	2.0℃ ↑	
"-35"	3.5℃ ↓	" 15"	1.5℃ ↑	
"-40"	4.0℃ ↓	" 10"	1.0℃ ↑	
"-45"	4.5℃ ↓	" 5"	0.5℃ ↑	
"-50"	5.0℃ ↓	**"00"**	**Non**	

3-4-4. Correction Temperature on Display PCB

STEP	OPERATION	DISPLAY	RESULT
Step 1	Push the ▼ ▲ button Five seconds.		
Step 2	Push the ▼button two time.		
Step 3	Push the ▼button four time.		OF->Od->dF->dt->CA Revised
		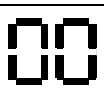	Now is the setting value.
Step 3	Push the ▲ button When changed	Setting value	Reference Table 2

Table 2

Display	Description	Display	Description	Memo
"00"	**unchangeable**	" 50"	5.0℃ ↑	
"-10"	1.0℃ ↓	" 40"	4.0℃ ↑	
"-20"	2.0℃ ↓	" 30"	3.0℃ ↑	
"-30"	3.0℃ ↓	" 20"	2.0℃ ↑	
"-40"	4.0℃ ↓	" 10"	1.0℃ ↑	
"-50"	5.0℃ ↓	"00"	Non	

3-4-5. Change Model

STEP	OPERATION	DISPLAY	RESULT
Step 1	Push the ▼ ▲ button Five seconds.		
Step 2	Push the ▼button fivetime.		Now is the setting value.
Step 3	Push the ▼ button When changed	Setting value	Reference Table 3

Table 3

Display	Description	applicable Model
"0"	R	KUR Series
"1"	F	KUF Series
"2"	RF	K-Series Dual
"3"	constant temperature	K-Series constant temperature

3-4-6. Change the defrost cycle

STEP	OPERATION	DISPLAY	RESULT
Step 1	Push the ▼ ▲ button Five seconds.		
Step 2	Push the ▼button twotime.		
Step 3	Push the ▼button twotime.		OF->Od->dF modified
			Now is the setting value.
Step 4	Push the ▲ button When changed	Setting value	Reference Table 4

Table 4

Freezer Model	Ref Model	
Changeable from 4 to 12 hours	Changeable from 4 to 60 hours	
Default "6"	Default "10"	

3-4-7. Change the deforst temperature

STEP	OPERATION	DISPLAY	RESULT
Step 1	Push the ▼ ▲ button Five seconds.		
Step 2	Push the ▼button twotime.		
Step 3	Push the ▼button threetime.		OF->Od->dF->dt modified
			Now is the setting value.
Step 4	Push the ▲ button When changed	Setting value	Reference Table 5

Table 5

Freezer Model	Ref Model	
Changeable from 0 to20℃	Changeable from 0 to20℃	
Default "10"	Default "8"	

3-4-8. Change Temperature showing method

STEP	OPERATION	DISPLAY	RESULT
Step 1	Push the ▼ ▲ button Five seconds.		
Step 2	Push the ▼button sixtime.		Now is the setting value.
Step 3	Push the ▼ button When changed	Setting value	Reference Table 6

Table 6

Setting value	description	Memo
℃	Set up ℃ temp	
℉	Set up ℉ temp	

3-4-9. Control Eva fan motor

STEP	OPERATION	DISPLAY	RESULT
Step 1	Push the ▼ ▲ button Five seconds.		
Step 2	Push the ▼button ninetime.		
			Now is the setting value.
Step 3	Push the ▼ button When changed	Setting value	Reference Table 7

Table 7

Setting value	description	Memo
"o"	Eva motor is running with setting mode on Comp Off	
"n"	Eva motor is keeping running even if Comp Off	

3-4-10. Verify Error Code

STEP	OPERATION	DISPLAY	RESULT
Step 1	Push the ▼ ▲ button Five seconds.		
Step 2	Push the ▼button fourtime.		If Bar LED will not display error, it will indicate no
Step 3	Push the ▼ button When changed	Error value	If there are lots of error, bar LED will display error sequently.

☞ Verify Error Code

No	Function	Display	Malfunction description	Memo
1	F-SENSOR		- When sensor is short, or the temperature is above 65℃	ERROR running
			- When sensor is open, or the temperature is lesser than -50℃.	
2	D1-SENSOR		- When sensor is short, or the temperature is above 65℃	Normal running
			- When sensor is open, or the temperature is lesser than -50℃.	
3	RT-SENSOR (outer sensor)		- When sensor is short, or the temperature is above 65℃	Normal running
			- When sensor is open, or the temperature is lesser than -50℃.	
4	defrost 1 ERROR		- (defrost 1) It will automatically stop after 80 minutes.	Normal running

5	E²ROM ERROR		- E²ROM 이 read 및 write 가되지 않는 경우	Normal running
6	Refrigerator defrosting ERROR		- When the refrigerator defrost 40 minutes, it will automatically stop.	Normal running
7	Cycle ERROR		- The COMP continuously run 30 minutes. The temperature of D-SENSOR doesn't reach 0℃	Normal running (freezer)

3-5. PCB function instructionDry –type model (REF / FRE)

Model	Sensor		Compressor		HTR	Front PCB		Memo
	R-Sensor	D-Sensor	1Comp	2Comp		R/F	DUAL	
KUR/F 9-1	O	O	O		O	O		
KGR9-1								
KUR/F12-2	O	O	O		O	O		
KGR12-2								
KUR/F15-2	O	O	O		O	O		
KGR15-2								
KUR/F18-3	O	O	O		O	O		
KGR18-3								
KHR9-1	O	O	O		O	O		
KGR9-1								
KHR12-2	O	O	O		O	O		
KSR12-2								
KHR15-2	O	O	O		O	O		
KSR15-2								
KHR18-3	O	O	O		O	O		
KSR18-3								

3-6. COMPRESSOR running、starting、stopping

3-6-1. COMP running

- COMP will stop for 4 minutes. (When the comp stopped, comp will be banned running during the 4 minutes.)

Section 4　Replacement Of Main Components

4-1. Mullion Heater replacement

A. Unscrew the four screws from mullion .

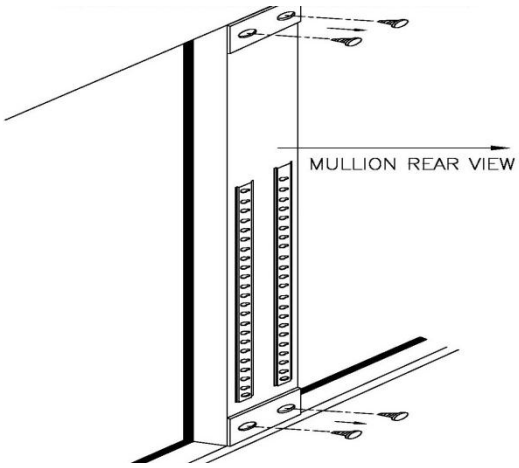

B.　Disconnect the connectors from Mullion Heater top.

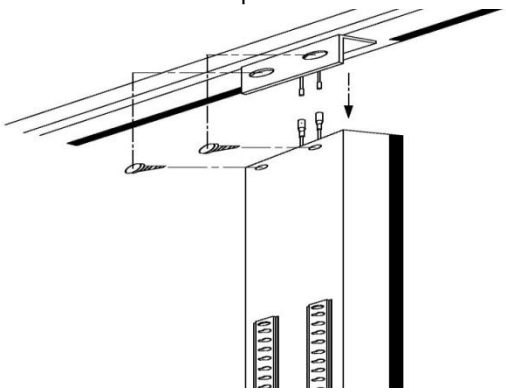

C. Take apart mullion front cover from mullion.

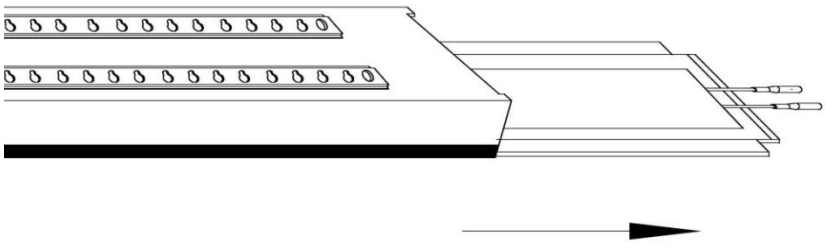

D. Pull out the heater from the inlet.

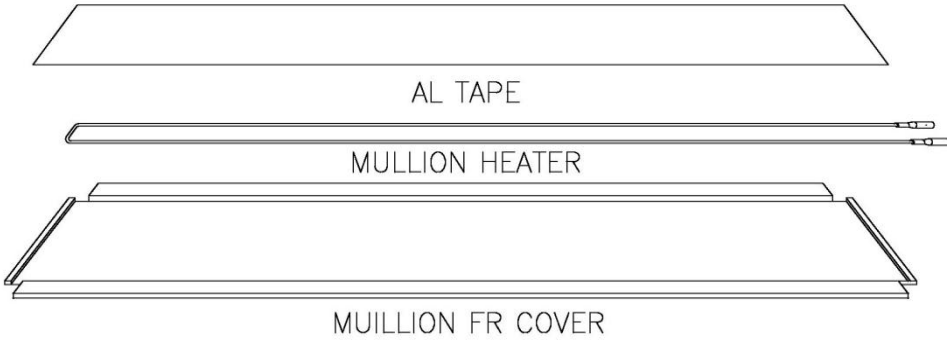

E. Reinstall the new mullion heater, do reversed in order.

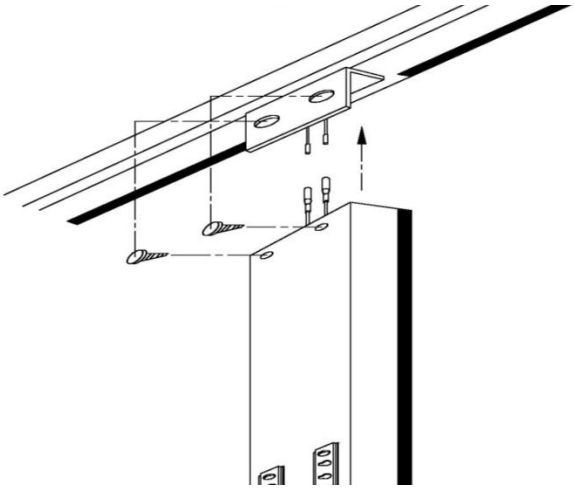

F. Seal gaps with silicon after installation.

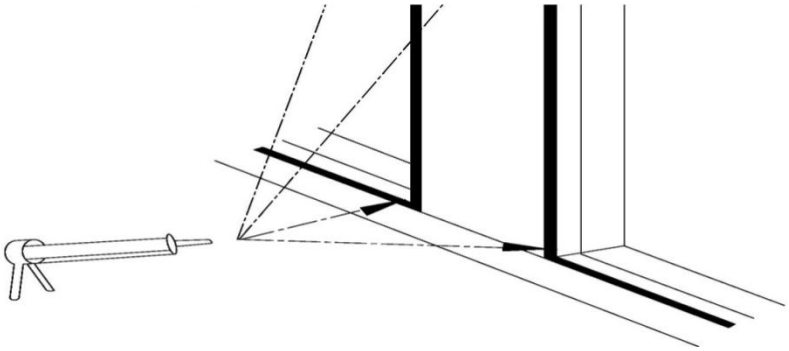

4-2. Cabinet Heater replacement

A. Disassemble Unit Front Cover.

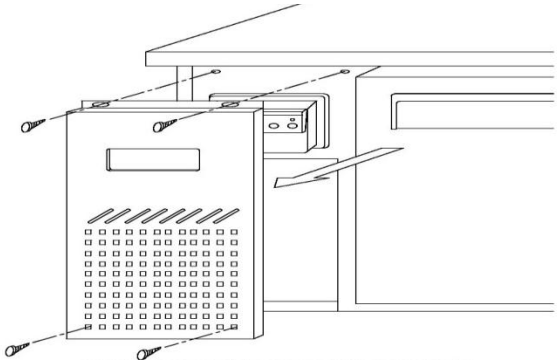

B. Disconnect housing connector.

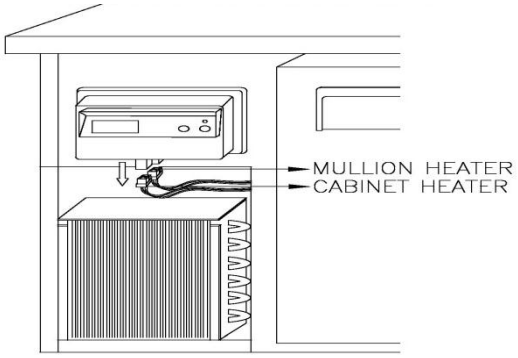

.

C. Unscrew the top hinge.

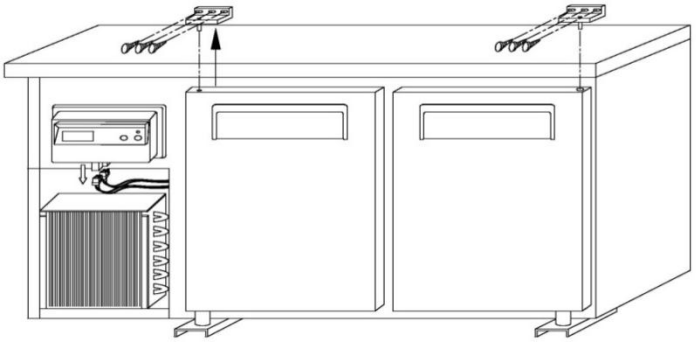

D. Lift the door and pull out the door.

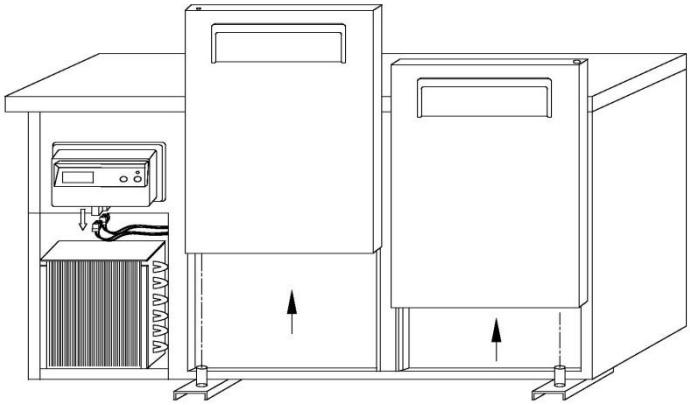

E. Insert the and edge of "-"type screw driver into the gap between the frame and frame cover, take apart the frame.

Pull out the heater from the inlet.

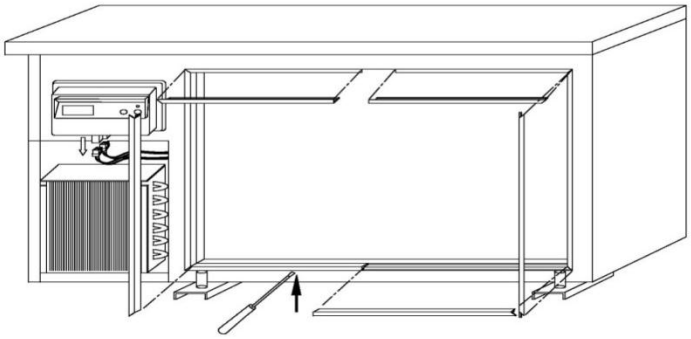

F. Insert new cabinet heater to the inlet.

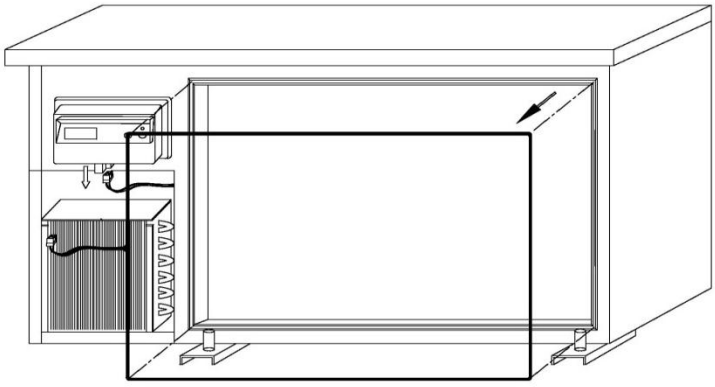

4-3. Refrigeration compartment replacement

A. Disassemble Unit Front Cover..

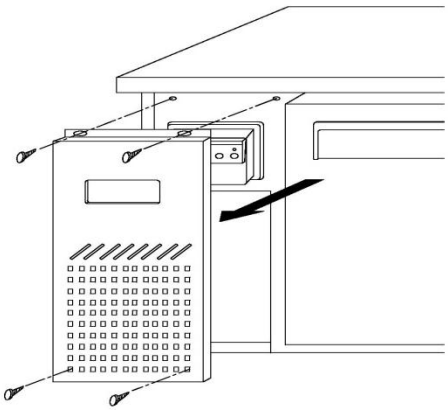

B. Unscrew unit Side Cover.

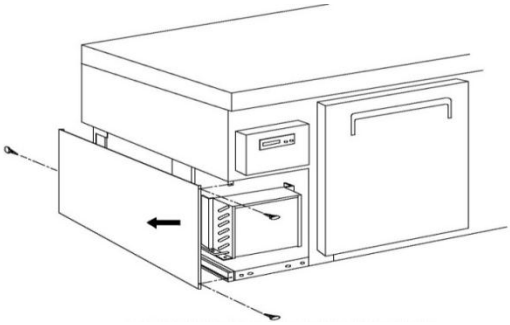

C. Unscrew the comp base.

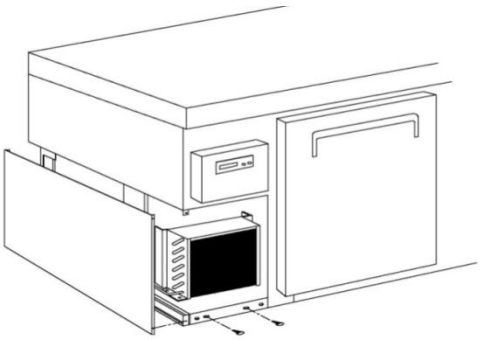

D. ull out the condensing unit.

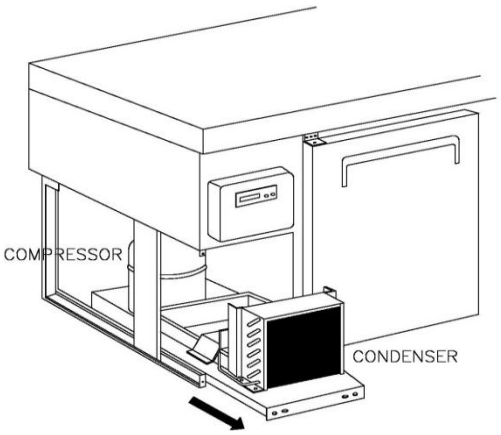

E. Refrigeration compartment

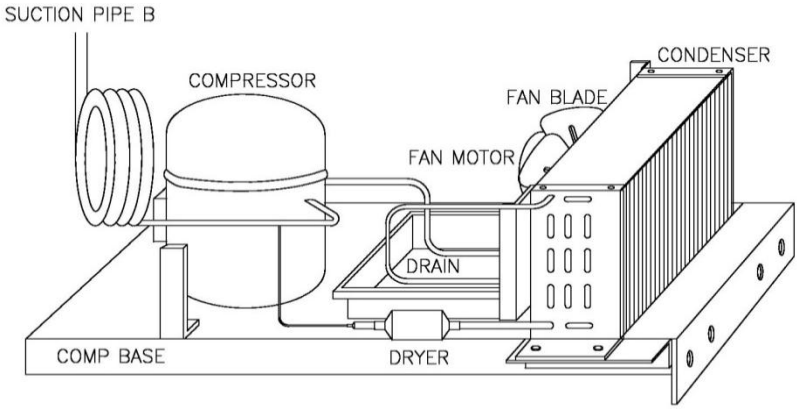

4-4.Remove Counter Top

A.Unscrew the cabinet Reinforce.

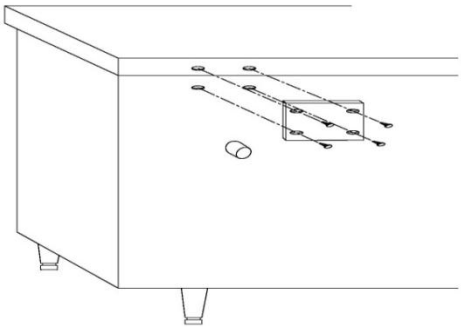

B.Unscrew the counter top bracket(Right).

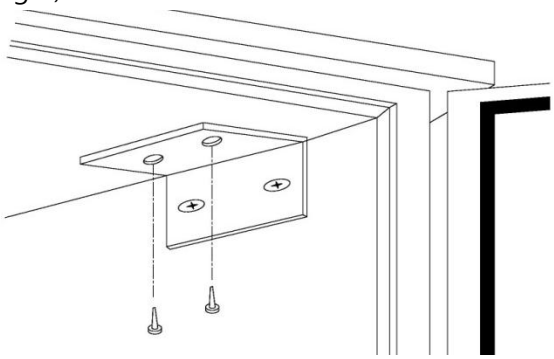

C.Unscrew the counter top bracket(Left).

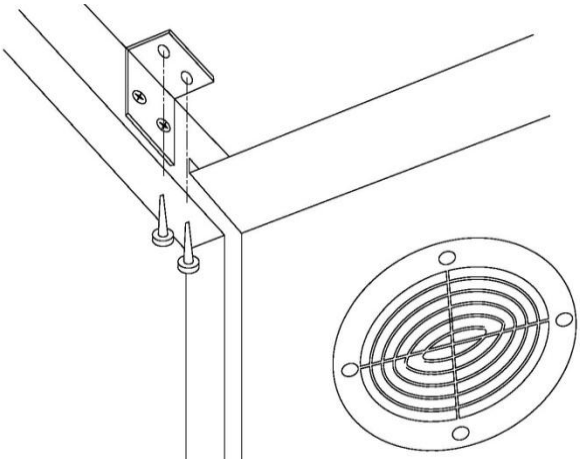

D. Cut the counter top out of cabinet as below.

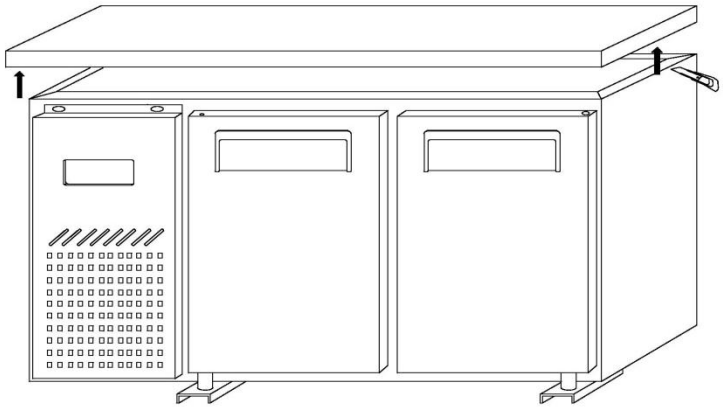

4-5.Remove Evap Motor

A. Disassemble counter top and do as below.

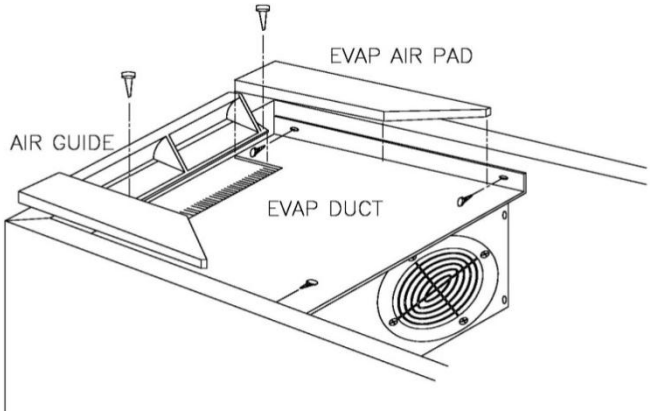

B. Unscrew evap cover.

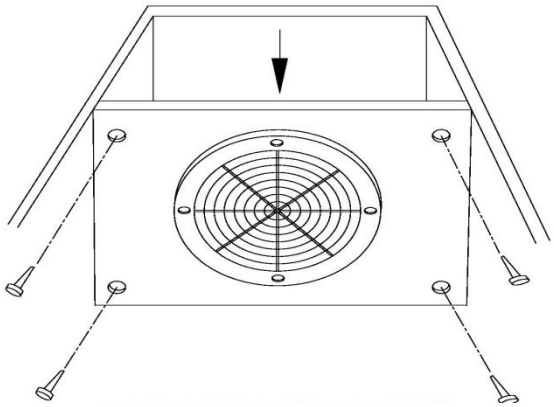

Take apart Evap Motor Housing.

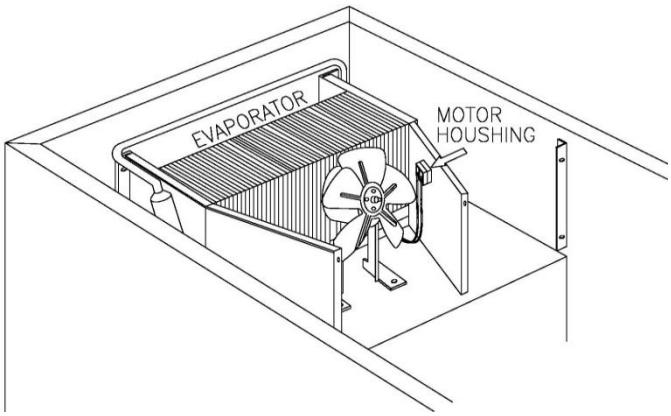

Unscrew Evap Motor Bracket.

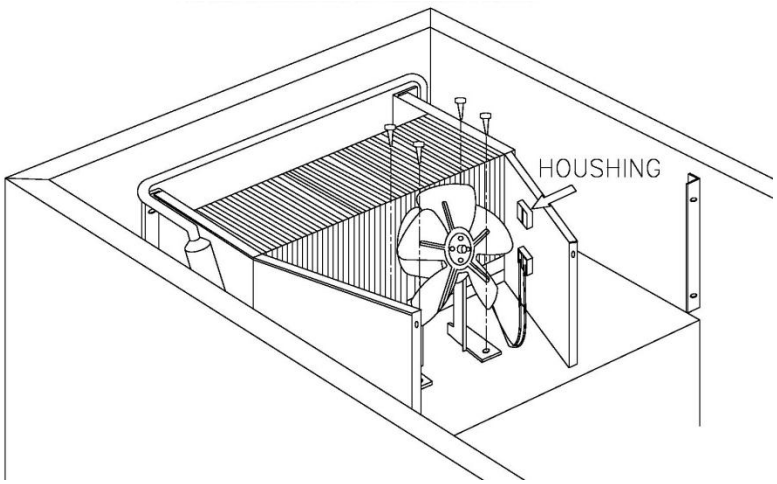

Remove Evap.

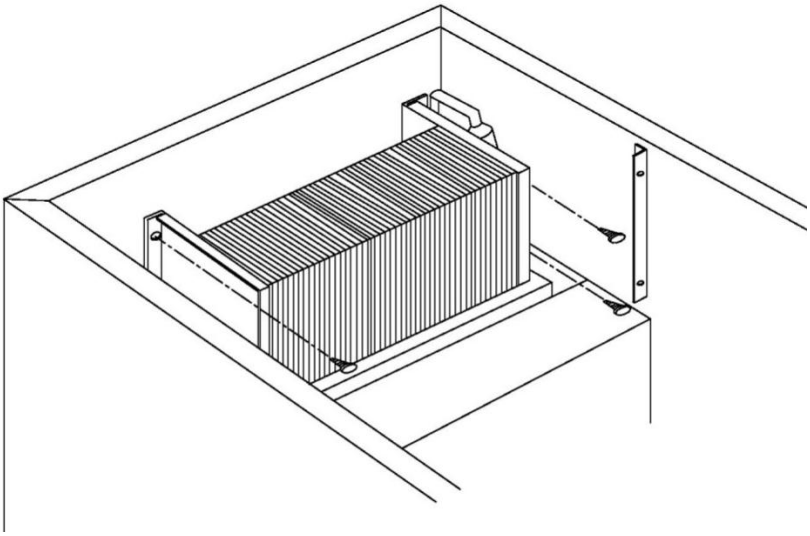

4-6.Remove Evaporator

Disassemble Counter Top and Evap Motor, then do as below.

Unscrew Air Guide, disconnect sensor connector, take apart Air Guide.

- Reforgerator

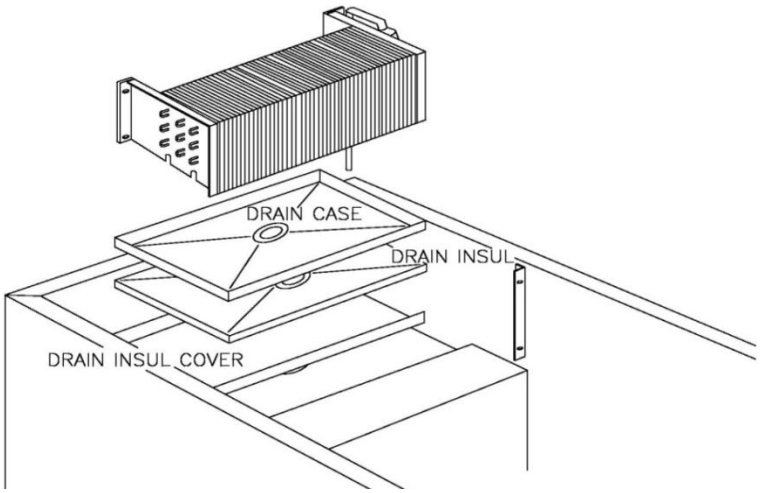

- Freezer

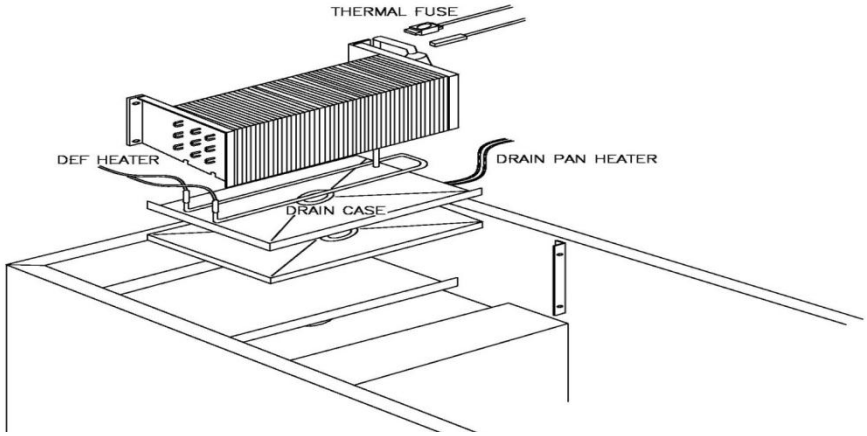

.

Section 5 Customer Support

5-1. MAIN COMPONENTS

5-1-1.COMPRESSOR

MODEL	PART NAME	PART NO.	HP	TYPE OF	INPUT	REFRIGERANT
KUR/KGR9-1 / 12-2 / 15-2	LX110LAJM	G2R5700200	1/4HP	RSCR	220V 50Hz	R-134a
KUR / KGR18-3	LX125LAJM	G5R5700200	1/3HP	RSCR	220V 50Hz	R-134a
KUF9-1 / 12-2 / 15-2	LX125LAJM	G5R5700200	1/3HP	RSCR	220V 50Hz	R-134a
KUF18-3	NEK2150GK	K3F5700200	3/4HP	CSIR	220V 50Hz	R-404a
KHR/KSR9-1 / 12-2 / 15-2	LX110LAJM	G2R5700200	1/4HP	RSCR	220V 50Hz	R-134a
KHR/KSR18-3	LX125LAJM	G5R5700200	1/3HP	RSCR	220V 50Hz	R-134a
KURF12-2	LX125LAJM	G5R5700200	1/3HP	RSCR	220V 50Hz	R-134a
KURF15-2/KURF18-3	NEK2150GK	K3F5700200	3/4HP	CSIR	220V 50Hz	R-404a

5-1-2.COMPRESSOR RELAY, OVERLOAD

MODEL	RELAY	OVERLOAD	NOTE
KUR/KGR9-1 / 12-2 / 15-2	P470MD/47±20$Ω	4TM314TFB	
KUR / KGR18-3	P470MD/47±20$Ω	4TM412RFB	
KUF9-1 / 12-2 / 15-2	P470MD/47±20$Ω	4TM314TFB	
KUF18-3	0012-65 248 2334112	T06341G6	
KHR/KSR9-1 / 12-2 / 15-2	P470MD/47±20$Ω	4TM314TFB	
KHR/KSR18-3	P470MD/47±20$Ω	4TM412RFB	
KURF12-2	P470MD/47±20$Ω	4TM314TFB	
KURF15-2/KURF18-3	0012-65 248 2334112	T06341G6	

5-1-3.COMPRESSOR CAPACITOR

MODEL	STARTING	RUNNING	MAKER	NOTE
KUR/KGR9-1 / 12-2 / 15-2	-	400V/5 μF	-	-
KUR / KGR18-3	-	400V/5 μF	-	-
KUF9-1 / 12-2 / 15-2	-	400V/5 μF	-	-
KUF18-3	330V/72~88ЧF		-	-
KHR/KSR9-1 / 12-2 / 15-2	-	400V/5 μF	-	-
KHR/KSR18-3	-	400V/5 μF	-	-
KURF12-2	-		-	-
KURF15-2/KURF18-3	330V/72~88ЧF	400V/5 μF	-	-

5-1-4.CONDENSER FAN MOTOR

MODEL	PART NAME	PART NO.	POLE	INPUT	TYPE	BLADE	MAKER
KUR/KGR9-1 / 12-2 / 15-2	IS-4420QTBC	G8F5000200	4P	220V,50Hz	SHADED POLE INDUCTION	AL3	
KUR / KGR18-3							
KUF9-1 / 12-2 / 15-2							
KUF18-3							
KHR/KSR9-1 / 12-2 / 15-2							
KHR/KSR18-3							
KURF12-2							
KURF15-2/KURF18-3							

5-1-5.EVAPORATOR FAN MOTOR

MODEL	PART NAME	PART NO.	POLE	INPUT	TYPE	BLADE	MAKER
KUR/KGR9-1 / 12-2 / 15-2	IS-4420QTBD	G8F5000100	4P	220V,50Hz	SHADED POLE INDUCTION	AL4	-
KUR / KGR18-3							
KUF9-1 / 12-2 / 15-2							
KUF18-3							
KHR/KSR9-1 / 12-2 / 15-2	IS-27213QTBE	CM25000101	2P				
KHR/KSR18-3							
KURF12-2 / KURF15-2	IS-4420QTBD	G8F5000100	4P				
KURF18-3	IS-27213QTBE	CM25000101	2P			PA-66 4	

5-2. Filter Dryer

MODEL	PART NO.	REFRIFERANT	SPEC	NOTE
KUR/KGR9-1 / 12-2 / 15-2	BR84100101	R-134a	C-052-5	-
KUR / KGR18-3				
KUF9-1 / 12-2 / 15-2				
KUF18-3				
KHR/KSR9-1 / 12-2 / 15-2				
KHR/KSR18-3				
KURF12-2				
KURF15-2/KURF18-3				

5-3. Defrost Heater

MODEL	PART NO.	SPEC	NOTE
KUF9-1	KF95300101	220V 300W	
KUF12-2/15-2/18-3	KF25300101	220V 450W	
KURF12-2/15-2/18-3	KF95300101	220V 300W	

5-4. Thermal Fuse

MODEL	PART NO.	SPEC	NOTE
KUF9-1 / 12-2	UF46200100	N50	
KUF15-2/18-3	G8F6200500	N77	
KURF12-2 / 15-2	UF46200100	N50	
KURF18-3	G8F6200500	N77	

5-5. Capillary Tube Spec

Model	Suction Pipe A			Suction Pipe B		
	Tube I.D	Length		Tube I.D	Length	
KUR9-1 KGR9-1	Φ2.4XΦ1.2	600mm		Φ2.4XΦ1.2	2500mm	
KUR12-2 KGR12-2	Φ2.4XΦ1.2	600mm		Φ2.4XΦ1.2	2500mm	
KUR15-2 KGR15-2	Φ2.4XΦ1.2	600mm		Φ2.4XΦ1.2	2500mm	
KUR18-3 KGR18-3	Φ2.4XΦ1.2	600mm		Φ2.4XΦ1.2	3000mm	
KUF9-1	Φ2.4XΦ1.2	600mm		Φ2.4XΦ1.2	3000mm	
KUF12-2	Φ2.4XΦ1.2	600mm		Φ2.4XΦ1.2	3000mm	
KUF15-2	Φ2.4XΦ1.2	600mm		Φ2.4XΦ1.2	3000mm	
KUF18-3	Φ2.4XΦ1.2	600mm		Φ2.4XΦ1.2	3400mm	
KHR9-1 KSR9-1	Φ2.4XΦ1.2	530mm		Φ2.4XΦ1.2	2000mm	
KHR12-2 KSR12-2	Φ2.4XΦ1.2	530mm		Φ2.4XΦ1.2	2500mm	
KHR15-2 KSR15-2	Φ2.4XΦ1.2	530mm		Φ2.4XΦ1.2	2500mm	
KHR18-3 KSR18-3	Φ2.4XΦ1.2	530mm		Φ2.4XΦ1.2	3000mm	
Model	Suction Pipe A			Suction Pipe B		
	Tube I.D	Length		Tube I.D	Length	
KURF12-2	Φ2.4XΦ1.2	1650mm	600mm	Φ2.4XΦ1.2	850mm	3500mm
KURF15-2	Φ2.4XΦ1.2	1650mm	600mm	Φ2.4XΦ1.2	850mm	3500mm
KURF18-3	Φ2.4XΦ1.2	1650mm	600mm	Φ2.4XΦ1.2	850mm	3500mm

5-6. The cycle pressure of model starting (refrigerant weight)

MODEL	COMP model	refrigerant		High pressure(Psi)	Low pressure(Psi)	Memo
		refrigerant	Refrigerant charge			
KUR9-1	LX110LAJM	R134a	240gr			
KUR12-2	LX110LAJM	R134a	240gr	125	6	
KUR15-2	LX110LAJM	R134a	240gr			
KUR18-3	LX125LAJM	R134a	340gr	110	5	
KGR9-1	LX110LAJM	R134a	240gr			
KGR12-2	LX110LAJM	R134a	240gr	125	6	
KGR15-2	LX110LAJM	R134a	240gr			
KGR18-3	LX125LAJM	R134a	340gr	110	5	
KUF9-1	LX125LAJM	R134a	330gr			
KUF12-2	LX125LAJM	R134a	380gr			
KUF15-2	LX125LAJM	R134a	380gr			
KUF18-3	NEK2150GK	R404a	370gr			
KHR9-1	LX110LAJM	R134a	240gr			

KHR12-2	LX110LAJM	R134a	240gr	125	6	
KHR15-2	LX110LAJM	R134a	240gr			
KHR18-3	LX125LAJM	R134a	300gr	110	5	
KSR9-1	LX110LAJM	R134a	240gr			
KSR12-2	LX110LAJM	R134a	240gr	125	6	
KSR15-2	LX110LAJM	R134a	240gr			
KSR18-3	LX125LAJM	R134a	300gr	110	5	
KURF12-2	LX125LAJM	R134a	290gr			
KURF15-2	NEK2150GK	R404a	310gr			
KURF18-3	NEK2150GK	R404a	320gr			