REFRIGERATOR

EN



DRC1754DA
DRC1755DA

EN

DEAR CUSTOMER,

You have just purchased a De Dietrich appliance. This choice reflects your high standards as well as your taste for the French art of living.
With over 300 years of heritage, our creations embody the perfect blend of design, authenticity and technology at the service of the culinary arts.

De Dietrich cultivates a constant quest for excellence, perpetuating exceptional craftsmanship in the creation of impeccably finished products. These are made with the finest materials and finished to the highest standards.
.
We hope you find great satisfaction in using your new appliance and eagerly anticipate any suggestions or questions you may have. De Dietrich's Customer Service is available to address your inquiries and feedback, ensuring that we consistently meet your needs.

We are honoured to become your new partner in your home and sincerely appreciate your trust.

www.de-dietrich.com

De Dietrich
CRÉATEUR D'ÉMOTIONS DEPUIS 1684

SAFETY

This appliance complies with the European directives.

SAFETY GUIDELINES

For your safety and to use your appliance correctly, carefully read these instructions (including the warnings and useful advice), before installation and first use.

To avoid damaging the appliance and unnecessary injury, it is important that the persons who use the appliance fully understand how it works and the safety instructions.

Always keep these instructions close to the appliance so that they can accompany it in the event of resale or a change of house. In this way, the appliance will continue to function optimally, and any risk of injury will be avoided.

The manufacturer shall not be held liable in the event of misuse of the appliance.

GENERAL SAFETY AND WARNINGS

This appliance is exclusively intended for domestic use in private households. It may only be used in a roofed, enclosed, and heated environment such as a kitchen or any other room fulfilling these conditions. Its use on shared or professional premises such as in an office or workshop break room, a camp site building, or a hotel, etc., does not comply with the use defined by the manufacturer.



WARNING! Keep your appliance away from any source of flame during installation, servicing, and use. The symbol in the margin, which is found on the rear of your appliance, means that there are inflammable materials in this area.

The refrigerating and insulating agents used in this appliance contain inflammable gases.

When transporting, installing, and servicing the appliance, make sure that none of the components of the cooling circuit are damaged. If the cooling circuit is damaged :

- ✓ Avoid naked flames and all sources of inflammation.
- ✓ Ventilate the room in which the appliance is installed.

Installation safety

- Your appliance must be installed and, if necessary, secured and used in accordance with the instructions in this manual to avoid any risks due to poor installation.
- Maintain clear of obstruction ventilation openings in the appliance enclosure or in the built-in structure.
- It is dangerous to change the composition of this model in any way whatsoever.
- Ensure that the power cord is not trapped or damaged when you position your appliance.
- Any damage to the power cord may result in a short circuit and/or electrocution.
- If the power cord is damaged, it should be replaced by the manufacturer, its after- sales service department or a similarly qualified person, so as to avoid danger.
- Do not place multiple plugs or portable power supply units behind the appliance.
- For models fitted with a water dispenser or an ice compartment, only fill or connect using a supply of drinking water.

Safety of vulnerable persons

- This appliance may be used by children aged 8 years or more and by people with physical, sensual or metal deficits and lacking experience or knowledge of the device provided that they are correctly supervised or have been provided with instructions regarding the safe use of the appliance and provided that the risks present have been fully understood.
- Children must not play with the appliance.
- Children must not clean and maintain the appliance without supervision.
- Children aged 3 to 8 are allowed to load and unload refrigeration appliances.
- Keep all the packaging materials out of the reach of children, as they can cause suffocation.

⚠ Safety of use

- Do not damage the refrigerating circuit.
- Do not use any mechanical or other means, other than those recommended by the manufacturer, to speed up the defrosting process.
- Do not use any electric appliances inside the compartment for food, unless they are of a type recommended by the manufacturer.
- Do not store any explosive substances, such as aerosols containing inflammable propellant gases, inside the appliance.

⚠ Food safety

To avoid contaminating food, follow the instructions below:

- Leaving the door open for long periods of time may significantly raise the temperature in the appliance compartments.
- Regularly clean any surfaces that may come into contact with food and accessible drain systems.
- Clean water containers if they have not been used for 48 hours. Properly rinse the water distribution system connected to a freshwater network if no water has been drawn off for five days.
- Store raw meat and fish in the appropriate refrigerator compartments so that the latter products are not in contact with other food and do not drip onto other food.
- The "two star" compartments for frozen foods are suitable for storing food that is already frozen, for storing or making ice cream and ice cubes.
- The "one, two and three star" compartments are not suitable for freezing fresh foods.
- If the refrigerator remains empty for an extended period of time, switch it off, defrost it, clean it, dry it and leave the door open to prevent any mould from forming inside the appliance.

DISPOSAL



This symbol indicates that this product should not be treated as household waste.

Only dispose of the appliance in certified collection centres.

Your appliance contains a large amount of recyclable material. It is marked with this label to indicate the used appliances must be disposed of in certified collection points.

This appliance’s packing materials are also recyclable. Help recycle it and protect the environment by dropping it off in the municipal receptacles provided for this purpose.

In accordance with the most recent legislative provisions applying to the protection and respect for the environment, your appliance does not contain any CFCs, but a refrigerant called R600a. The exact type of cool and gas used in your appliance is clearly shown on the ID plate inside the fridge part of your appliance, at the foot of the left- hand side panel. R600a is a non-polluting gas that does not harm the ozone layer and hardly contributes to the greenhouse effect at all.

Used appliances must be immediately made unusable.

Disconnect the power cord and cut it as close to the appliance as possible. Inhibit the closing mechanism of the door or, even better, detach the door, so that children or pets cannot remain enclosed inside the appliance when playing.

DESIGN

Layout and presentation of your appliance

- Your appliance was designed and tested to optimise its energy use.
- The proposed layout represents the ideal solution for achieving ideal energy consumption and optimum food storage.

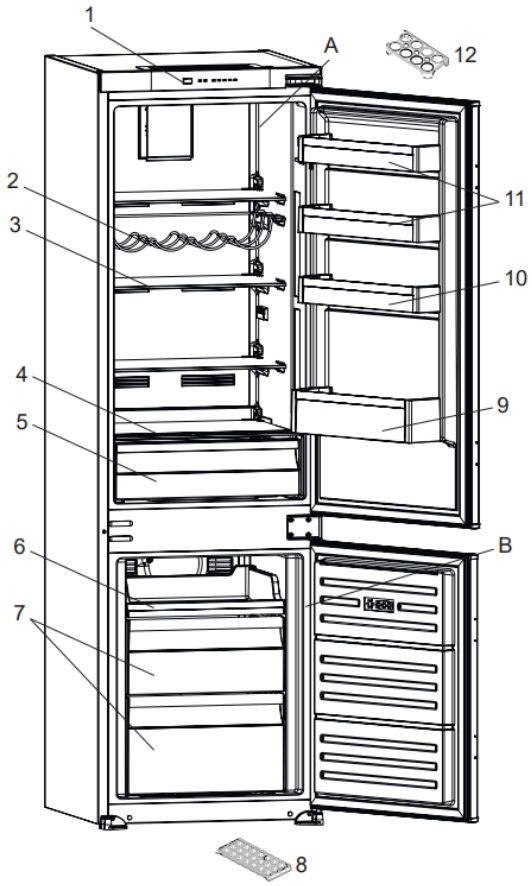

. .
A) Refrigerator compartment
B) Freezer compartment
1) Control panel
2) Wine Rack*
3) Refrigerator shelves
4) Crisper cover
5) Crisper
6) Freezer Sliding Tray*
7) Freezer drawers
8) Ice box tray
9) Bottle shelf
10) Adjustable door shelf * / Door shelf
11) Door shelves
12) Egg holder

** In some models*

This illustration is only for hinting, the detail please check your appliance.

You can only keep your food in good condition and optimize your energy consumption by following the instructions in this installation and user guide.

Energy-saving measures

To reduce the power consumption of your appliance:

1. Install the appliance in a cool, wellventilated room, but not in direct sunlight and not near a heat source (such as a radiator or oven) otherwise an insulating plate should be used.
2. Allow warm food and drinks to cool before placing them inside the appliance.
3. Place thawing food in the refrigerator compartment if available. The low temperature of the frozen food will help cool the refrigerator compartment while the food is thawing. This will save energy. Frozen food left to thaw outside of the appliance will result in a waste of energy.
4. Drinks or other liquids should be covered when inside the appliance. If left uncovered, the humidity inside the appliance will increase, therefore the appliance uses more energy. Keeping drinks and other liquids covered helps preserve their smell and taste.
5. Avoid keeping the doors open for long periods and opening the doors too frequently as warm air will enter the appliance and cause the compressor to switch on unnecessarily often.
6. Keep the covers of the different temperature compartments (such as the crisper and chiller if available) closed.
7. The door gasket must be clean and pliable. In case of wear, replace the gasket.

Storing food

Here are some rules you should follow:

- Maintain the cold chain and select "Booster" mode at least 6 hours before coming home with groceries (if your model has it).
- Clean the refrigerator part at least once a month (see Care and cleaning)
- Keep home-made food in the refrigerator after first taking care to leave it to cool.
- Make sure that your appliance is set to the recommended temperatures shown below. The temperatures for every compartment are recommended to optimise storing food and avoid any waste.

Fresh food compartments	Fresh food compartment (refrigerator)	**+4°C**
Frozen food compartments	0-star compartment (depending on model)	**0°C**
	1 star compartment (depending on model)	**-6°C**
	2-star compartment (depending on model)	**-12°C**
	3-star compartment (depending on model)	**-18°C**
	4-star freezer drawers/shelves (depending on model)	**-18°C**

- Place the food in the locations recommended in the tables below.

Fresh food compartments

Refrigerator compartments	Type of food
Refrigerator Door and door racks	Jams, drinks, eggs, condiments. Do not place perishable fresh food in these areas
Crisper	Lettuce, fruit, vegetables, herbs Do not put bananas, onions, potatoes or garlic in the refrigerator.
Lower shelf	Raw meat, fish, highly perishable food.
Intermediate shelf	Milk products
Top shelf	Cold cuts, prepared meals, meals to reheat

Frozen food compartments (compartments available depending on model)

Freezer compartments	Logos & Markings	Type of food
0 star compartment		To store sorbet for a few hours and make ice cubes. This compartment is not suitable for freezing fresh food.
1 star compartment		To store frozen products for a few hours and make icecubes. This compartment is not suitable for freezing fresh food.
2 star compartment		To store frozen products for a few days, make ice creamand ice cubes. This compartment is not suitable for freezing fresh food.
3 star compartment		To store frozen products for a few weeks/months andmake ice cubes. This compartment is not suitable for freezing fresh food.
4 stars freezer drawers/shelves		To freeze food and store: - Meat, fish (lower drawer/shelf). - Vegetables, chips (intermediate drawer/shelf). - Ice cream, fruit, ready-made dishes (upperdrawer/shelf)

Care before installation

Before installing the appliance and connecting it to the power, wash the interior and all internal accessories with lukewarm water and some neutral soap so as to remove the typical smell of a brand-new product, then dry thoroughly.

ⓘ **Never use detergents or abrasive cleaners, they will damage the inside coating.**

When using the appliance for the first time or after a period of non-use, before putting the food in the compartment let the appliance run at least two hours on the higher settings.

Location

⚠**Warning! Never expose the appliance to a naked flame.**

- Install the appliance in a dry and well-ventilated place.
- The appliance should be located far from heat sources like radiators, boilers, sunlight, etc.
- Your appliance is designed to function optimally at a given ambient temperature. In this case, itis said to be designed for a particular "climate class". The climate class is clearly shown on theID plate (see the "Contact" chapter). The refrigerator may not maintain satisfactory inside temperatures if it operates outside of the temperature limits set for the "climate class" it is designed for. Ensure that the chosen location is compliant with these temperature limits:

Class	Ambient temperature
SN	This refrigeration appliance is designed for use at ambient temperatures **between 10°C and 32°C**
SN-ST	This refrigeration appliance is designed for use at ambient temperatures **between 10°C and 38°C**
SN-T	This refrigeration appliance is designed for use at ambient temperatures **between 10°C and 43°C**
N	This refrigeration appliance is designed for use at ambient temperatures **between 16°C and 32°C**
ST	This refrigeration appliance is designed for use at ambient temperatures **between 16°C and 38°C**
T	This refrigeration appliance is designed for use at ambient temperatures **between 16°C and 43°C.**

- Based on the above, avoid locating your appliance on balconies, verandas, terraces, in garages, etc. Excessively high temperature in summer and excessively low temperatures in winter can prevent it from functioning properly and therefore properly conserving food.

- Appliance levelling is achieved by adjusting one or more adjustable feet located under the unit (refer to the "Levelling the appliance" section).

ⓘ If your appliance is fitted with casters, then remember that they should only be used for short movements. Do not move the appliance over long distances on its casters.

Dimensions

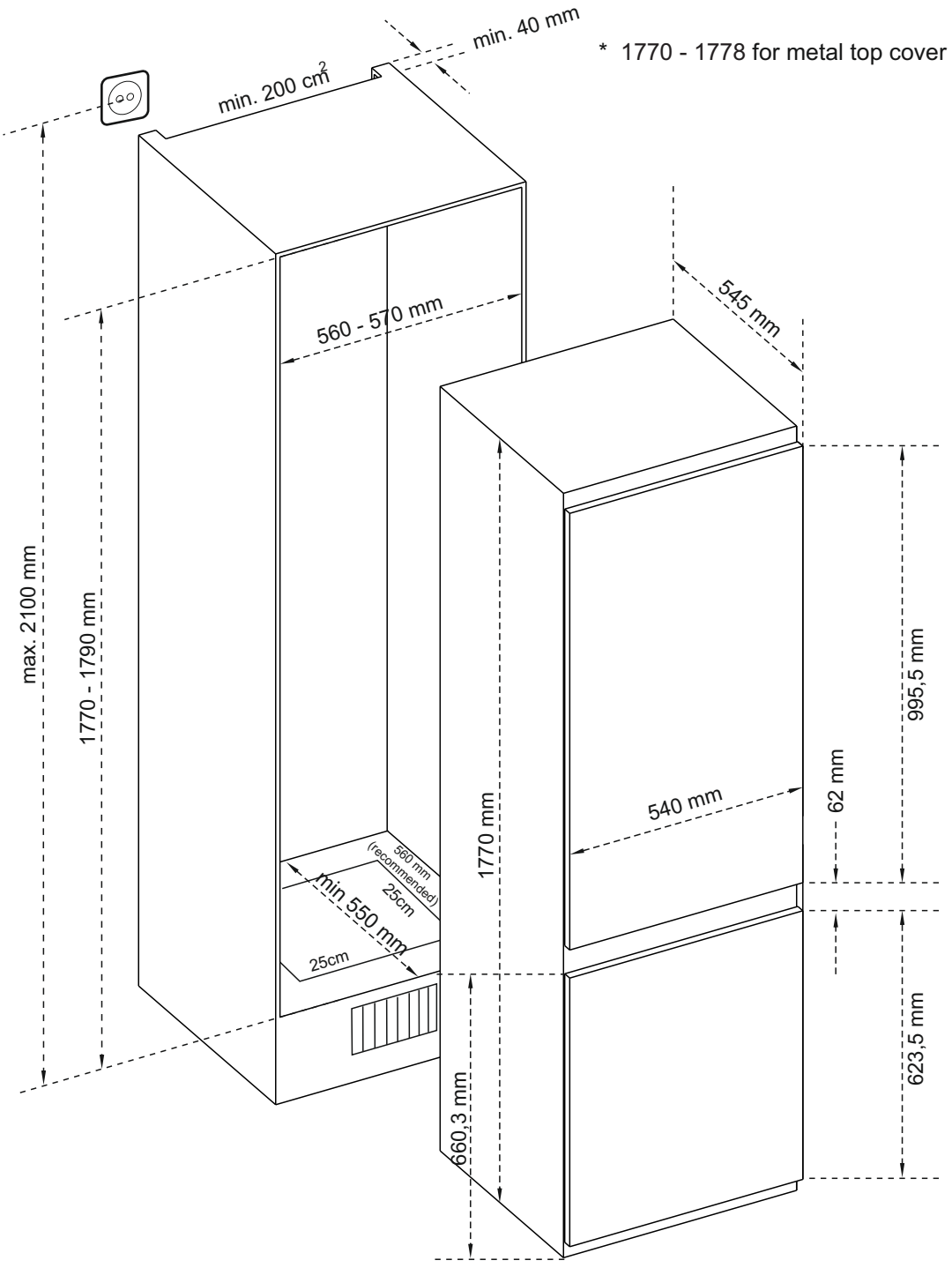
* 1770 - 1778 for metal top cover
min. 40 mm
min. 200 cm²
560 - 570 mm
545 mm
max. 2100 mm
1770 - 1790 mm
1770 mm
540 mm
62 mm
995,5 mm
623,5 mm
660,3 mm
560 mm (recommended)
25cm
min 550 mm
25cm

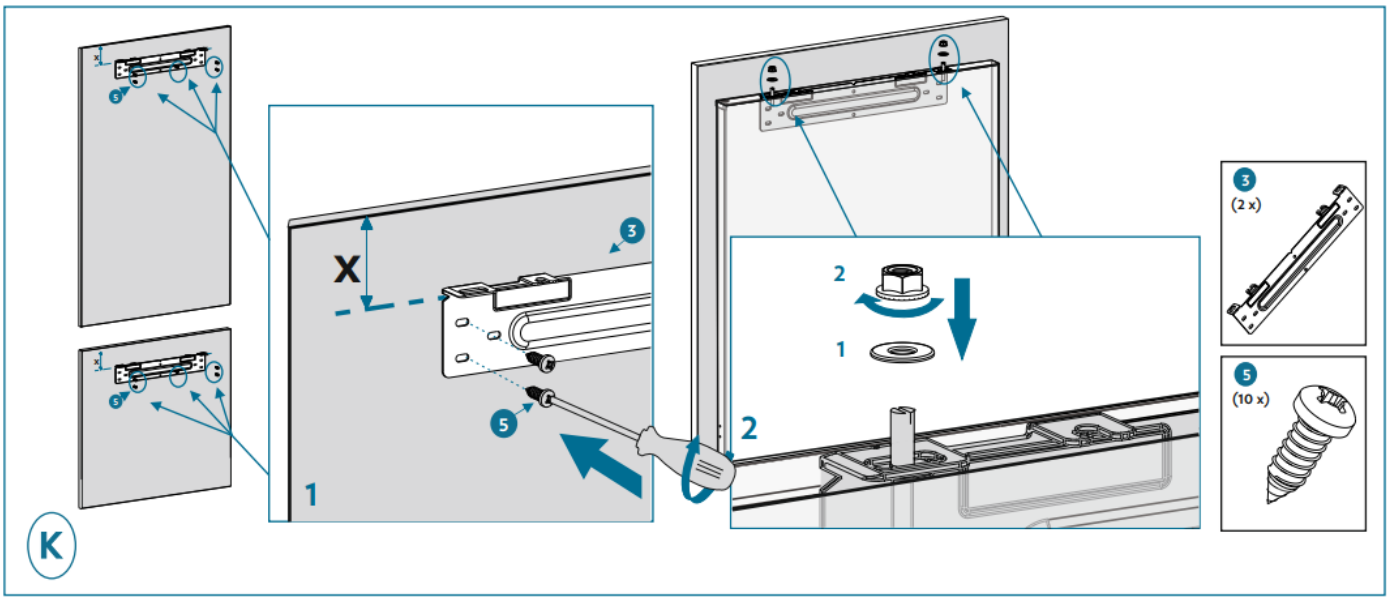
K
X
1
2
3
5
(2 x)
(10 x)

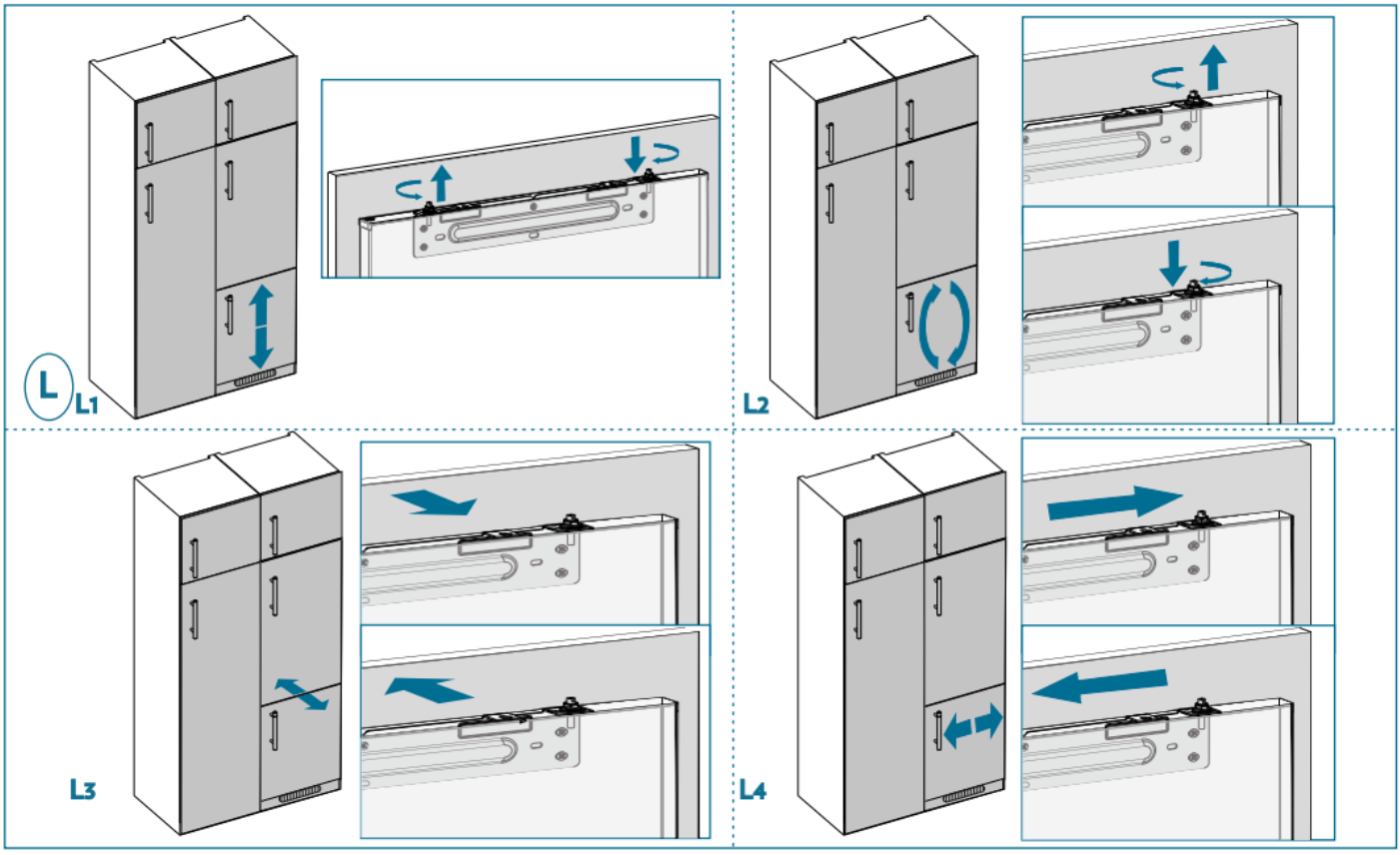
L
L1
L2
L3
L4

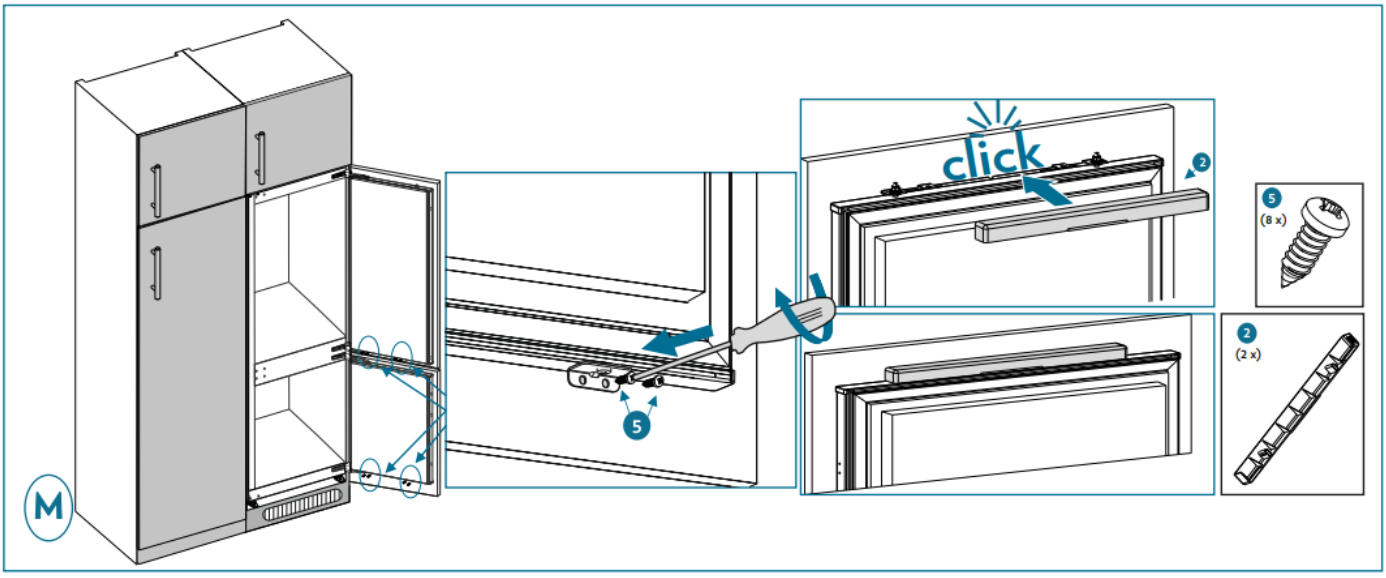
M
click
2
5
(8 x)
(2 x)

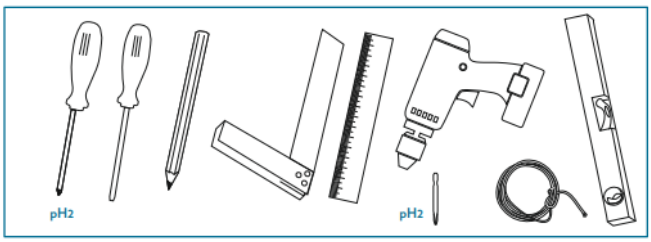

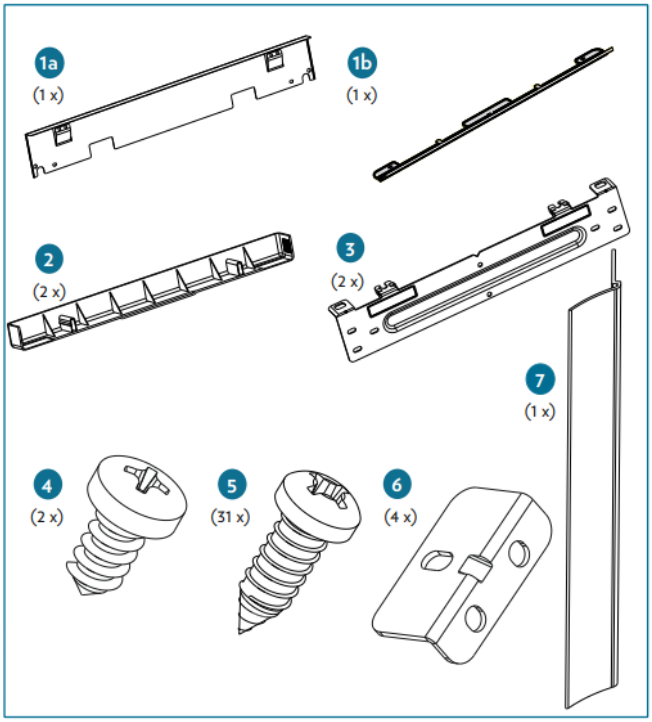

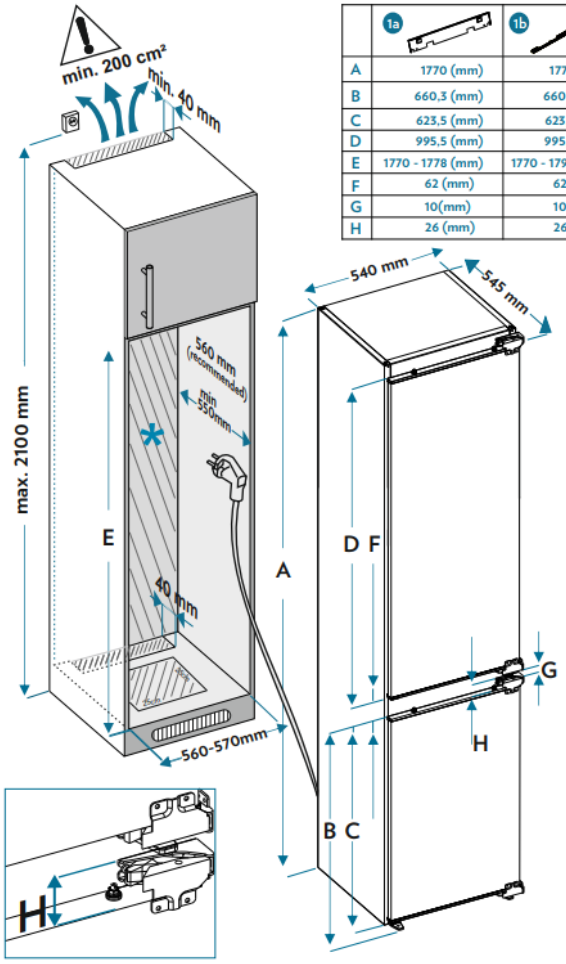

	1a	1b
A	1770 (mm)	1770 (mm)
B	660,3 (mm)	660,3 (mm)
C	623,5 (mm)	623,5 (mm)
D	995,5 (mm)	995,5 (mm)
E	1770 - 1778 (mm)	1770 - 1790 (mm)
F	62 (mm)	62 (mm)
G	10(mm)	10 (mm)
H	26 (mm)	26 (mm)

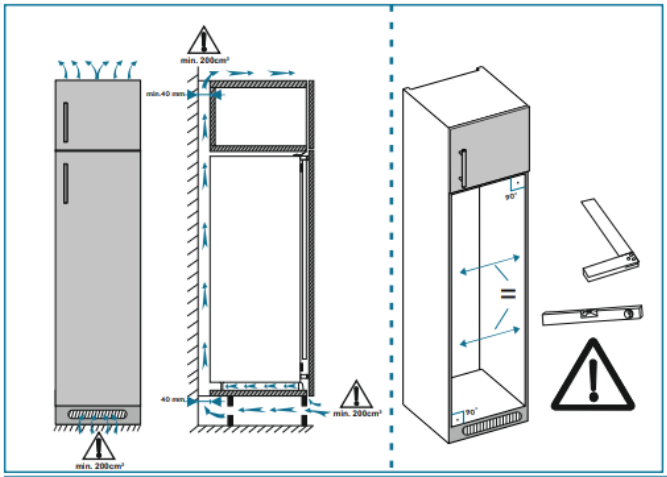

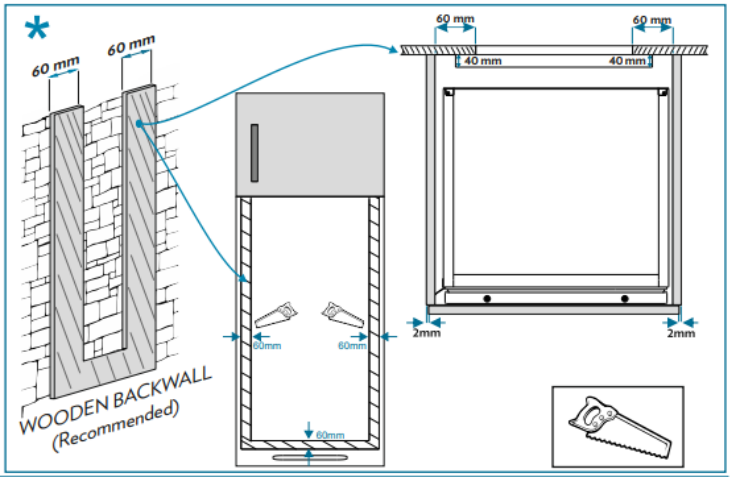

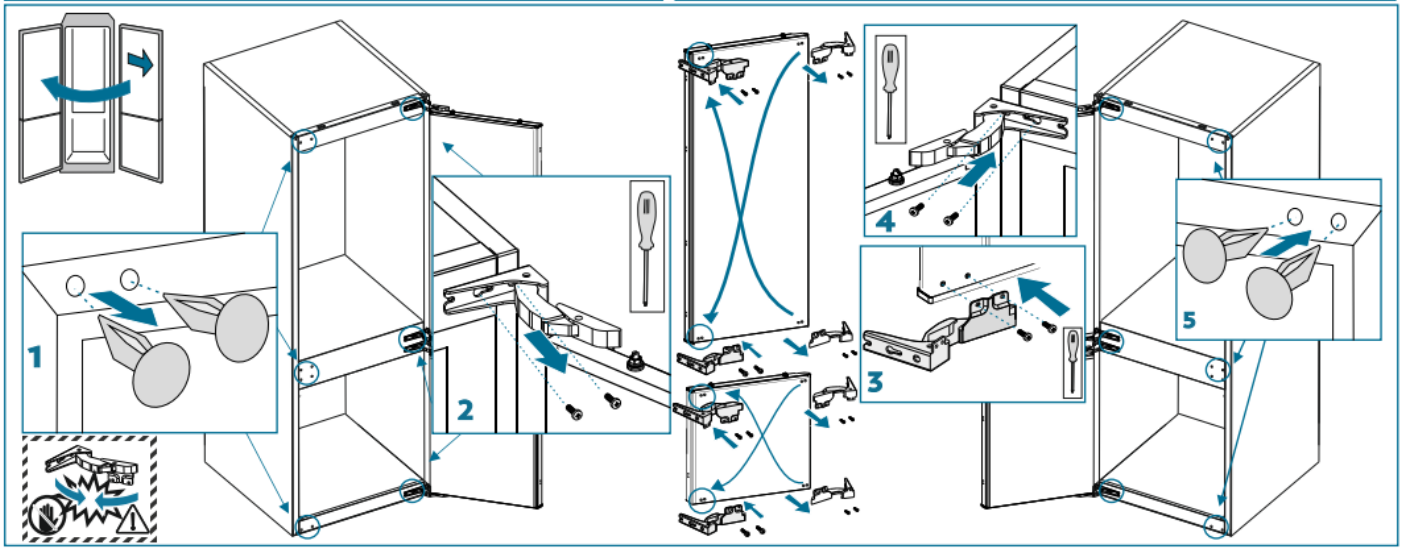

524978O8

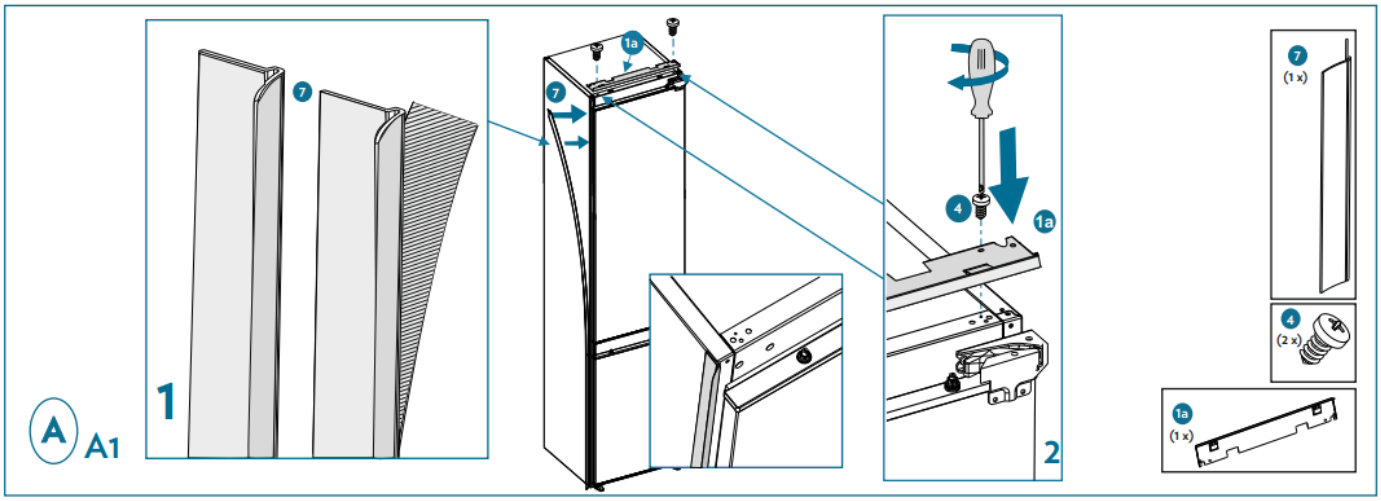
A
A1
1
2
7
1a
4
(1 x)
(2 x)

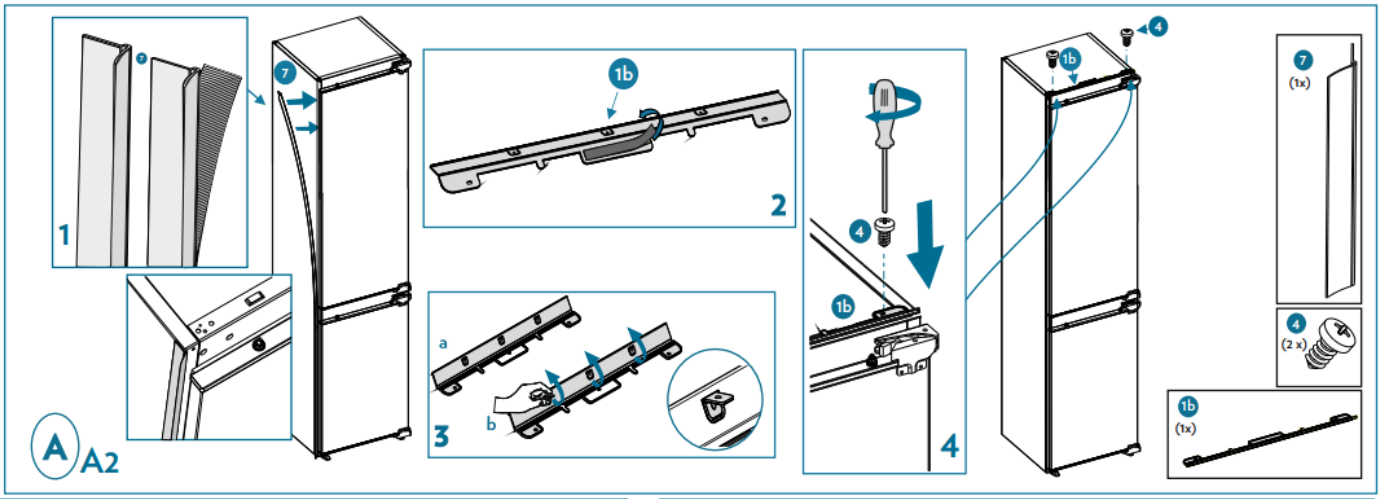
A
A2
1
2
3
4
a
b
7
1b
4
(1x)
(2 x)

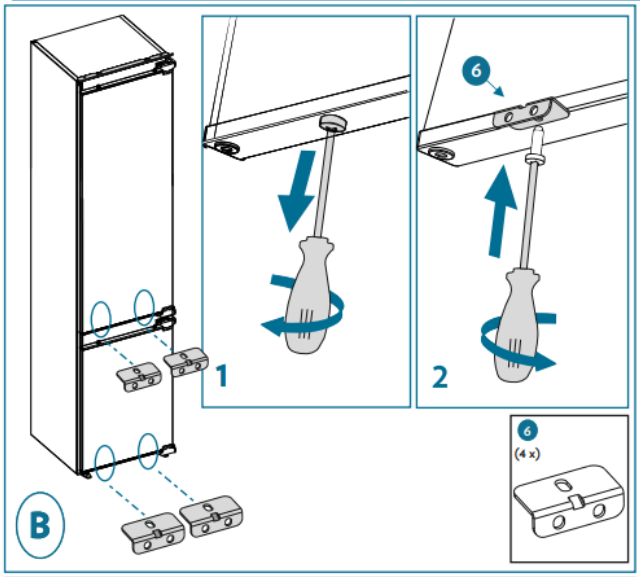
B
1
2
6
(4 x)

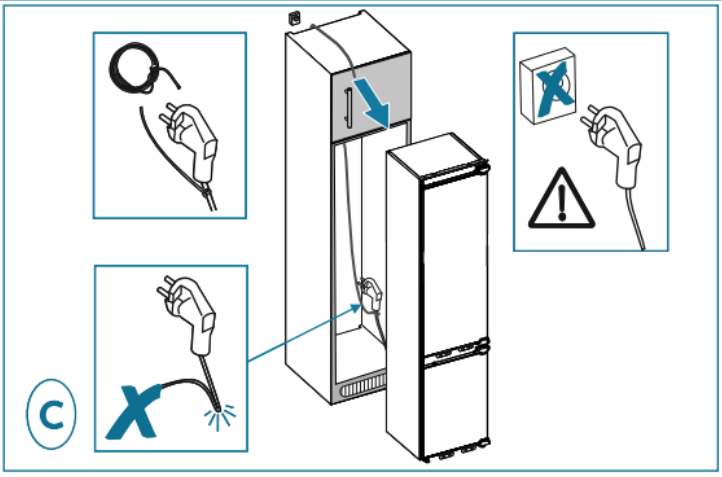
C

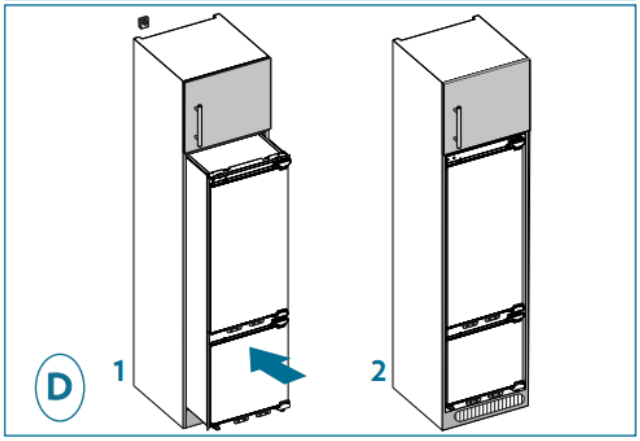
D
1
2

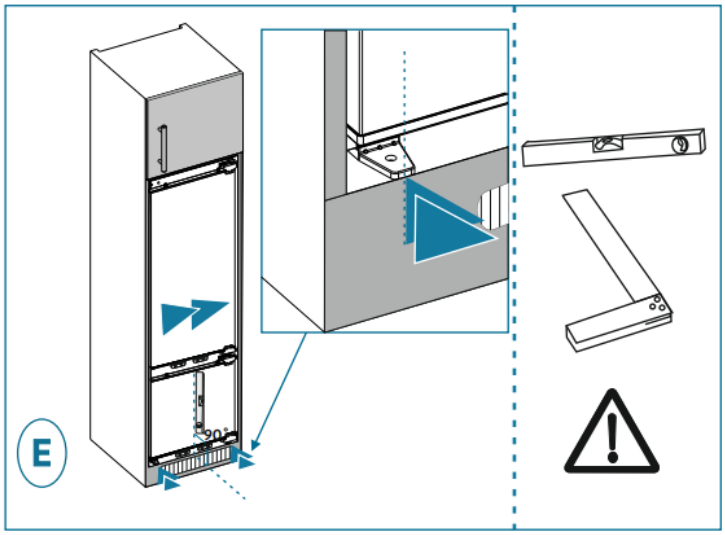
E

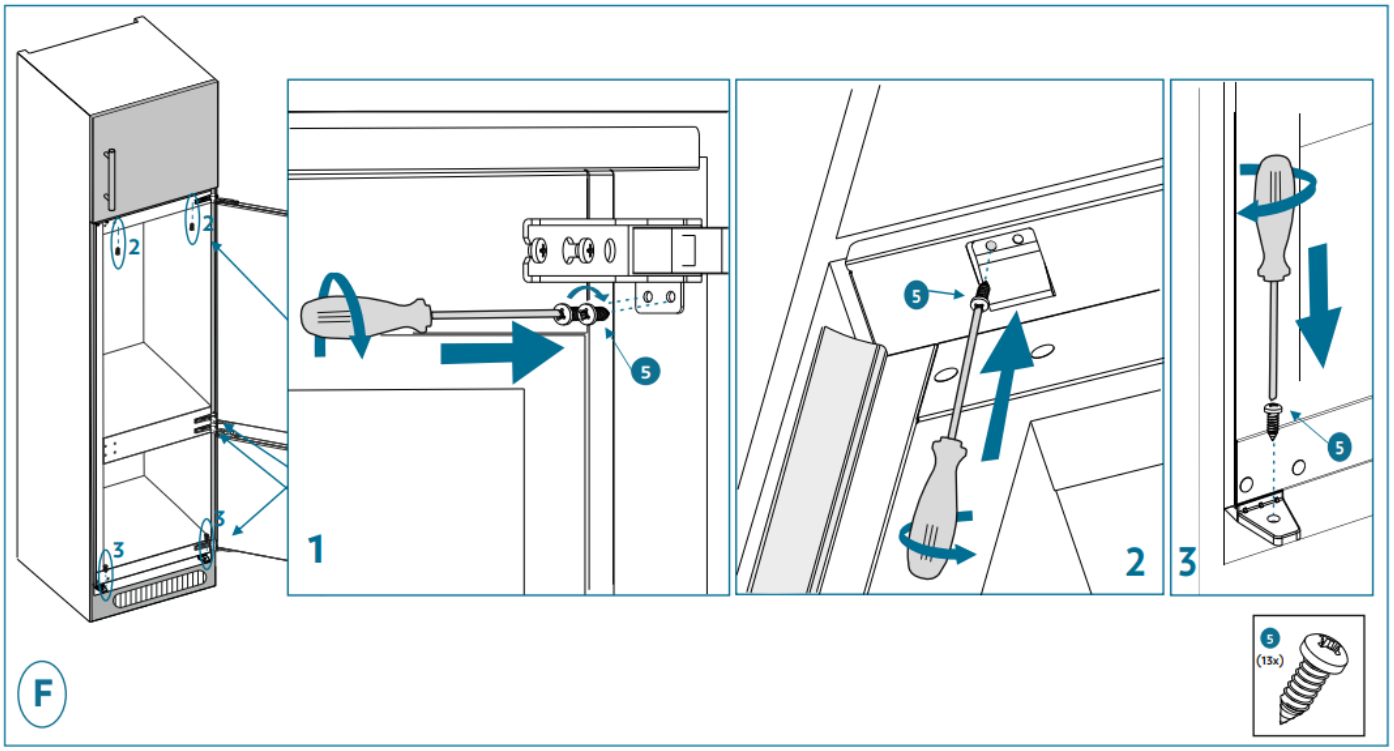
2
2
3
3
1
5
2
5
3
5
(13x)
F

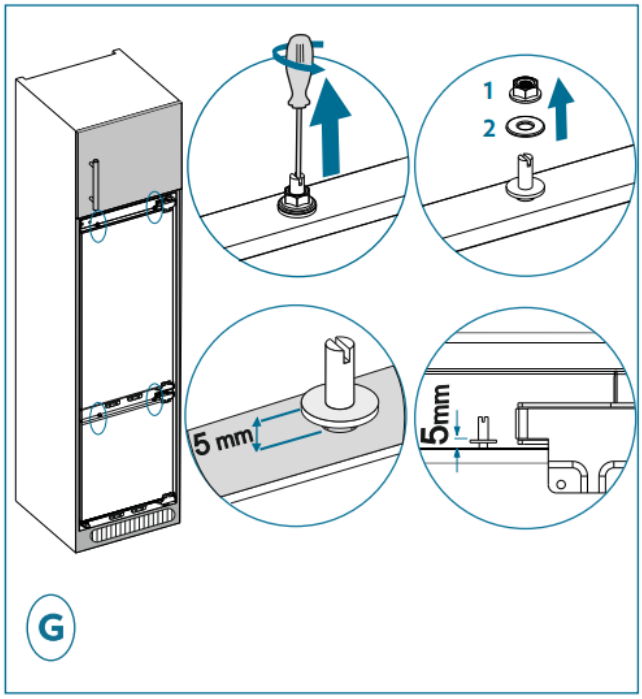
1
2
5 mm
5mm
G

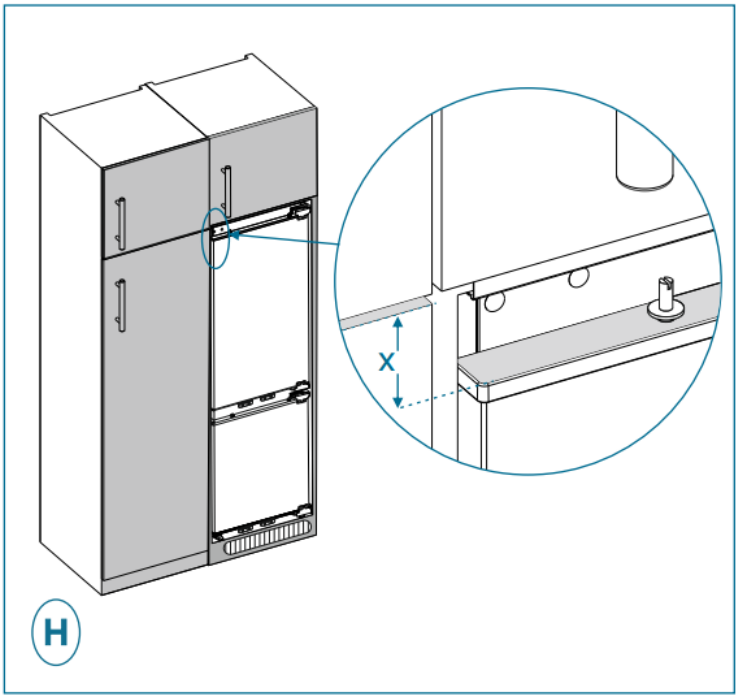
X
H

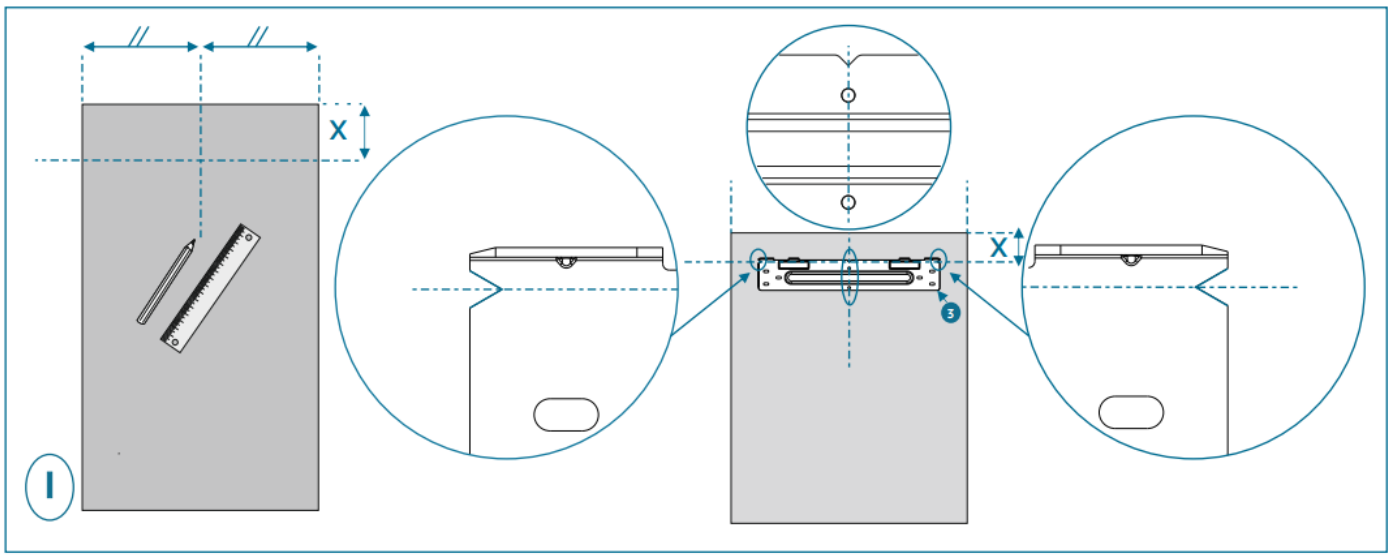
X
X
3
I

USE & TIPS

New generation cooling technology

Fridges with new-generation cooling technology have a different operating system to static fridges. Other (static) fridges may experience a build up of ice in the freezer compartment due to door openings and humidity in the food. In such fridges, regular defrosting is required; the fridge must be switched off, the frozen food moved to a suitable container and the ice which has formed in the freezer compartment removed.
In fridges with new-generation cooling technology, a fan blows dry cold air evenly throughout the fridge and freezer compartments. The cold air cools your food evenly and uniformly, preventing humidity and ice build-up.
In the refrigerator compartment, air blown by the fan, located at the top of the refrigerator compartment, is cooled while passing through the gap behind the air duct. At the same time, the air is blown out through the holes in the air duct, evenly spreading cool air throughout the refrigerator compartment.
There is no air passage between the freezer and refrigerator compartments, therefore preventing the mixing of odours.
As a result, your fridge, with new generation cooling technology, provides you with ease of use as well as a huge volume and aesthetic appearance.

Display and Control Panel

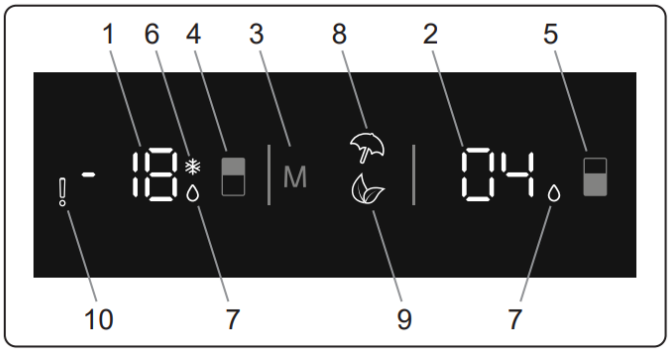

Using the Control Panel

1. Freezer set value screen
2. Cooler set value screen
3. Mode button. It enables the modes (economy, holiday, etc.) to be activated if desired.
4. Freezer set button. Enables the setting of the freezer to be modified and super freeze mode to be activated if desired. The freezer may be set to -16, -18, -20, -22, or -24 °C.
5. Cooler set button. Enables the setting of the cooler to be modified and super cool mode to be activated if desired. The cooler may be set to 8, 6, 5, 4, or 2 °C.
6. Super freeze indicator.
7. Super cool indicator.
8. Holiday mode symbol.
9. Economy mode symbol.
10. Alarm symbol.

Operating your fridge

If your product has lighting

When the product is plugged in for the first time, the interior lights may turn on 1 minute late due to opening tests.

Super Freeze Mode

- To freeze a large quantity of food that cannot fit on the fast freeze shelf.
- To freeze prepared foods.
- To freeze food more quickly.
- To store fresh food and vegetables.

Press freezer set button until Super freeze symbol will be seen on the screen. Buzzer will sound beep beep. Mode will be set

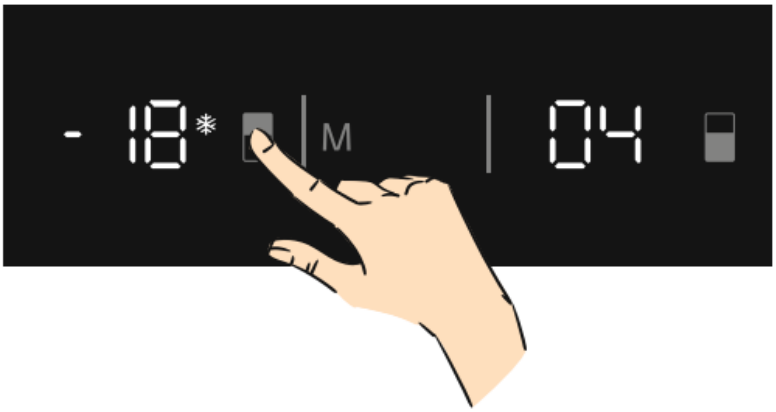

During this mode

- Temperature of cooler and super cool mode may be adjusted. In this case super freeze mode continues.
- Economy and Holiday mode can not be selected.
- Super freeze mode can be cancelled by the same operation of selecting.

Notes: : This option shall be turned on 24 hours before placing the fresh food to the freezer. After 54h, it returns to the normal set value.

Super Cool mode:

- To cool and store a large quantity of food in the fridge compartment.
- To quickly cool drinks.

Press cooler set button until super cool symbol will be seen on the screen. Buzzer will sound beep beep. Mode will be set

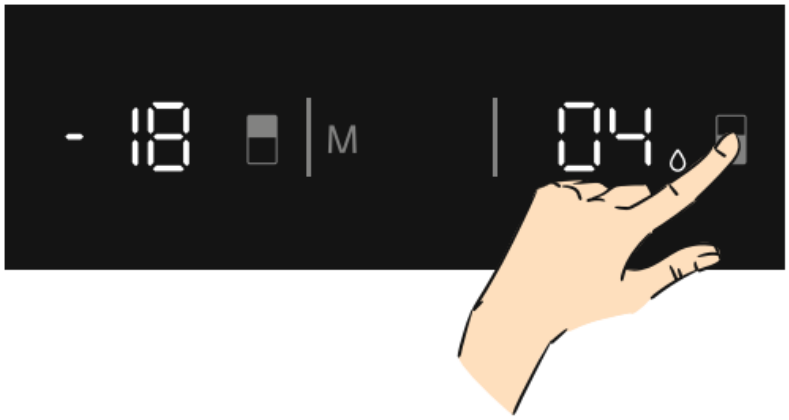

During this mode

- Temperature of freezer and super freeze mode may be adjusted. In this case super cool mode continues.
- Economy and holiday mode can not be selected
- Super cool mode can be cancelled by the same operation of selecting.

Economy Mode

- Push "MODE" button until eco symbol appears.
- If no button is pressed for 1 second. Mode will be set. Eco symbol will blink 3 times. When mode is set, buzzer will sound beep beep.
- Freezer and refrigerator temperature segments will show "E".
- Economy symbol and E will light till mode finishes

Energy savings. During periods of less frequent use (door opening) or absence from home, such as a holiday, Eco program can provide optimum temperature whilst saving power.

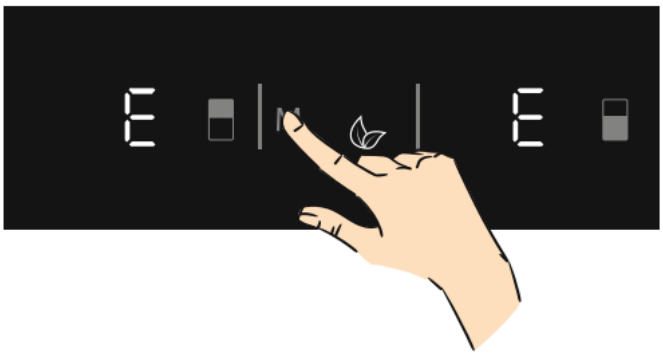

During this mode

- Freezer may be adjusted. When economy mode will be cancelled, the selected setting values will proceed.
- Cooler may be adjusted. When economy mode will be cancelled, the selected setting values will proceed.

- Super cool and super freeze modes can be selected. Economy mode is automatically cancelled and the selected mode is activated.
- Holiday mode can be selected after cancelling the economy mode. Then the selected mode is activated.
- To cancel, you will just need to press on mode button.

Holiday mode

- Push "MODE" button until holiday symbol appears.
- If no button is pressed for 1 second. Mode will be set. Holiday symbol will blink 3 times. When mode is set, buzzer will sound beep beep.
- Cooler temperature segment will show "--".

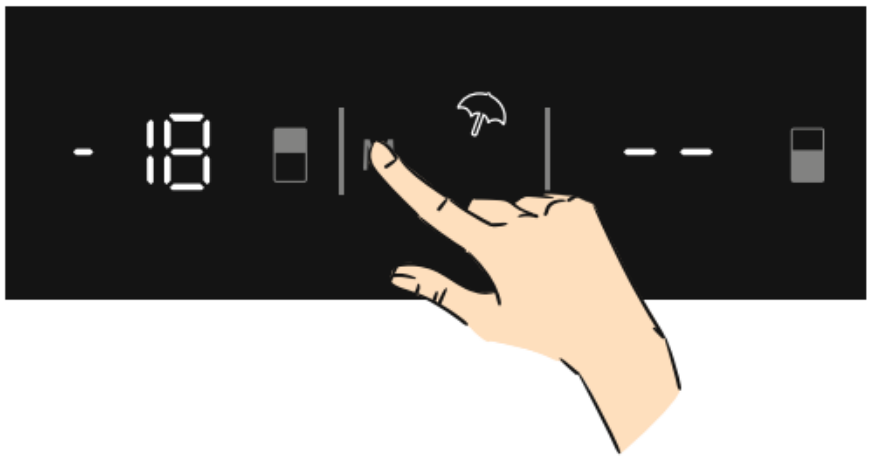

During this mode

- Freezer may be adjusted. When holiday mode will be cancelled, the selected setting values will proceed.
- Cooler may be adjusted. When holiday mode will be cancelled, the selected setting values will proceed.
- Super cool and super freeze modes can be selected. Holiday mode is automatically cancelled and the selected mode is activated.
- Economy mode can be selected after cancelling the holiday mode. Then the selected mode is activated.
- To cancel, you will just need to press on mode button.

Drink Cool mode

This mode is used to cool drinks within an adjustable time.

- Press the freezer button for 3 seconds.
- "dc" will show on the freezer screen and "05" will blink on the cooler screen. • Press the cooler button to adjust the time (05, 10, 15, 20, 25, or 30 minutes).
- When the time has been selected, the numbers will blink 3 times on the screen and the buzzer will sound twice.
- If no button is pressed for 2 seconds, the time will be set.

- The countdown will start from the adjusted time minute by minute.
- The remaining time will blink on the screen. To cancel this mode, press the freezer set button for 3 seconds.
- To cancel this mode, press the freezer set button for 3 seconds.

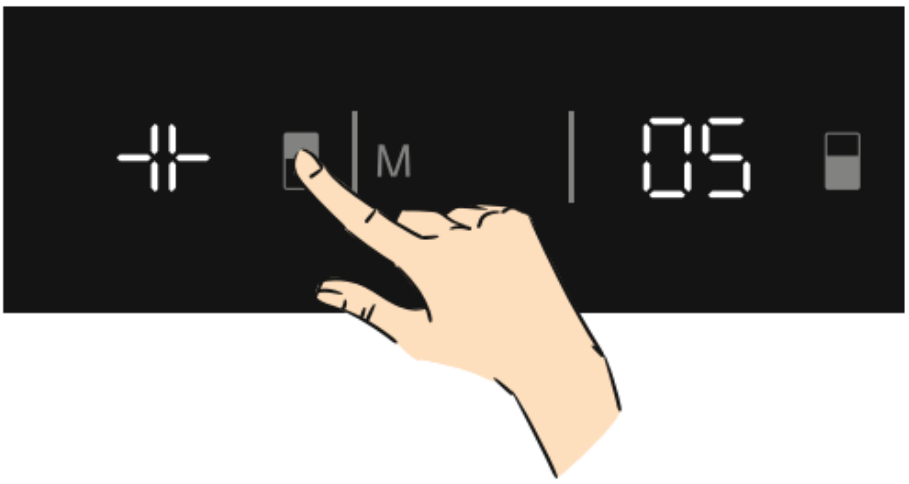

Screen saver mode

This mode saves energy by switching off all control panel lighting when the panel is left inactive.

- Screen saver mode will be activated automatically after 30 seconds.
- If you press any key while the lighting of the control panel is off, the current machine settings will reappear on the display to let you make any change you wish.
- If you do not cancel the screen saving mode or press any key for 30 seconds, control panel will remain off. To deactivate the screen saving mode,
- To cancel the screen saving mode, first of all, you need to press any key to activate the keys and then press and hold the Mode button for 3 seconds.
- To reactivate screen saving mode, press and hold the mode button for 3 seconds.

To desactivate the screen saving mode.

- To cancel the screen saving mode, first of all, you need to press any key to activate the keys and then press and hold the Mode button for 3 seconds.
- To reactivate screen saving mode, press and hold the mode button for 3 seconds.

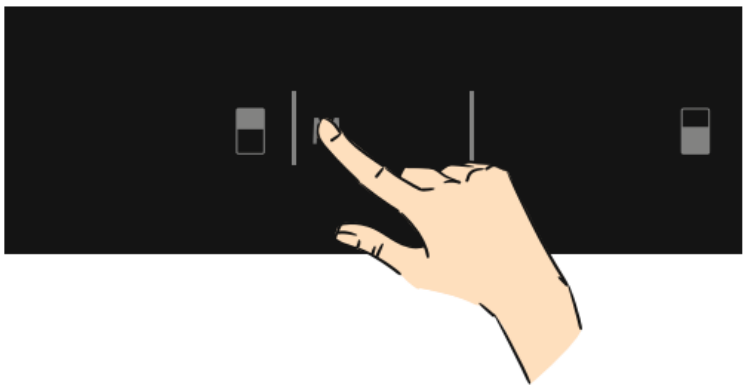

Freezer Temperature Settings

- The initial temperature value for the freezer setting indicator is -18°C.
- Press the set freezer button once.
- When you first push this button, the last set value will blink on the screen.
- Whenever you press this button, a lower temperature will be set (-16 °C, -18 °C, -20 °C, -22 °C, -24 °C, super freeze).
- When you push the set freezer button until the super freeze symbol appears, and if you do not push any other button within 1 second, super freeze will flash.
- If you continue to press it, it will restart from -16 °C.
- The temperature value selected before holiday, super freeze, super cool or economy mode is activated, will remain the same when the mode is complete or cancelled. The appliance will continue to operate at this temperature value.

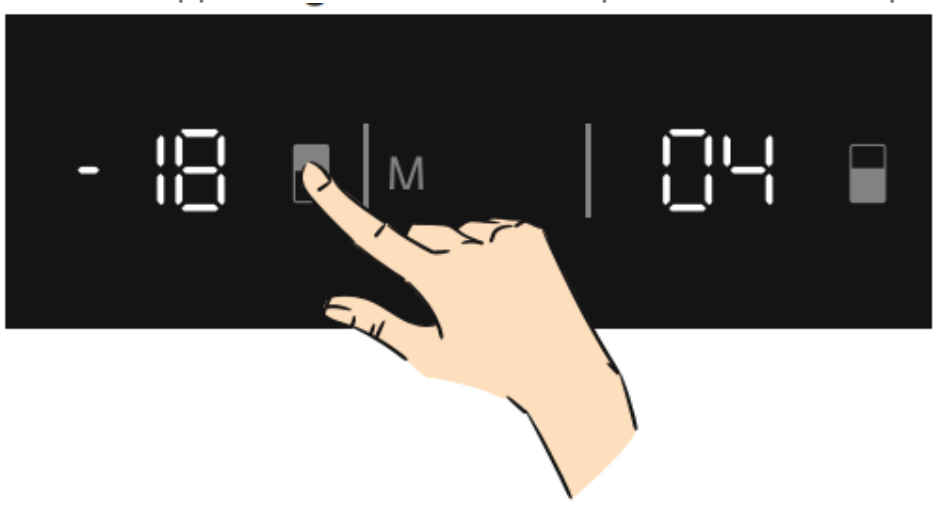

Cooler Temperature Settings

- The initial temperature value for the cooler setting indicator is +4 °C.
- Press the cooler button once.
- When you first push this button, the last value will appear on the cooler setting indicator.
- Whenever you press the button, a lower temperature will be set (+8 °C, +6 °C, +5 °C, +4 °C, or +2 °C, or Super cool).
- If you press the cooler set button until the super cool symbol appears on the cooler setting indicator, and do not press any buttons for 1 second, super cool will flash.
- If you continue to press the button, it will restart from +8 °C.
- The temperature value selected before holiday, super freeze, super cool or economy mode is activated, will remain the same when the mode is complete or cancelled. The appliance will continue to operate at this temperature value.

Recommended Settings for the Freezer and Cooler Compartment Temperature

Freezer Compartment	Cooler Compartment	Remarks
-18 °C	4 °C	For regular use and best performance.
-20 °C, -22 °C or -24 °C	4 °C	Recommended when environmental temperature exceeds 30 °C.
SF	4 °C	Must be used when you wish to freeze food in a short period of time.
-18 °C, -20 °C, -22 °C or -24 °C	2 °C	These temperature settings must be used when the environmental temperature is high or if you think the refrigerator compartment is not cool enough becuse the door is being opened frequently.
-18 °C, -20 °C, -22 °C or -24 °C	SC	Must be used when the refrigerator compartment is overloaded with food or when food needs to be cooled quickly.

Note: Some built-in appliances may have a stand-by mode

Stand-By Mode

This mode can be used to save energy when you go on vacation.

- Select “8” set value.
- Push mode and cooler Set Button for 5 seconds
- Display will show “St” “bY” on the screen

During this mode

In stand-by mode; all components will be disabled.

If you push the display button, display will show “St” “bY” on the screen to show stand-by mode is active.

To cancel; push mode and cooler set button for 5 seconds.

After the mode is deactivated, an error code may light on the display because the product maybe not cool enough. The error code will turn off when the product reaches normal temperature

Door Open Alarm Function

If fridge door is opened more than 2 minutes, appliance sounds ‘beep beep’.

Accessories

Visual and text description in the accessories section may vary according to the model of your appliance.

Ice Tray

- Fill the ice tray with water and place in the freezer compartment.
- After the water has completely frozen, you can twist the tray as shown below to remove the ice cubes**.**



The bottle holder (in some models)

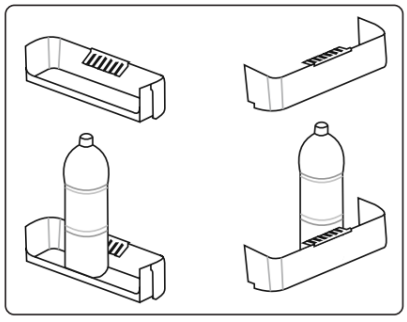

- Use the bottle holder to prevent bottles from slipping or falling over.
- Hold the left end of the lever and set the ice-tray on the icebox

The chill drawer (in some models)

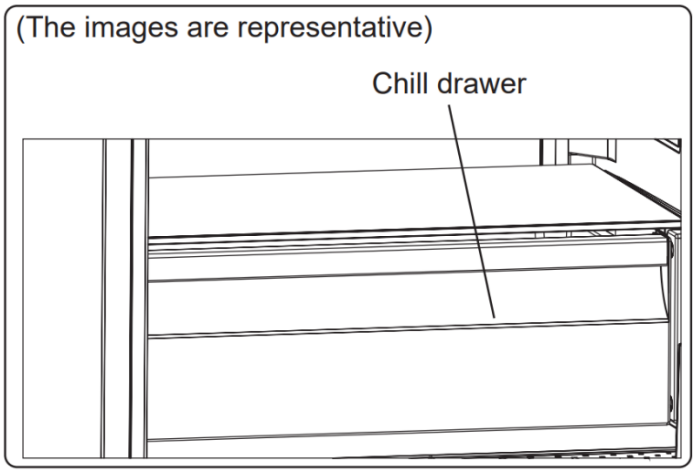

Keeping food in the chill drawer, instead of the freezer or refrigerator compartments, allows food to retain freshness and flavour for longer, while preserving its fresh appearance. When the chill drawer tray becomes dirty, remove it and wash with water.

(Water freezes at 0°C, but food containing salt or sugar freezes at temperatures lower than this).

The chill drawer is usually used for storing foods such as raw fish, lightly pickled food, rice, and so on.

⚠ **Do not put food you want to freeze or ice trays (to make ice) in the chill drawer.**

To remove the chill drawer :

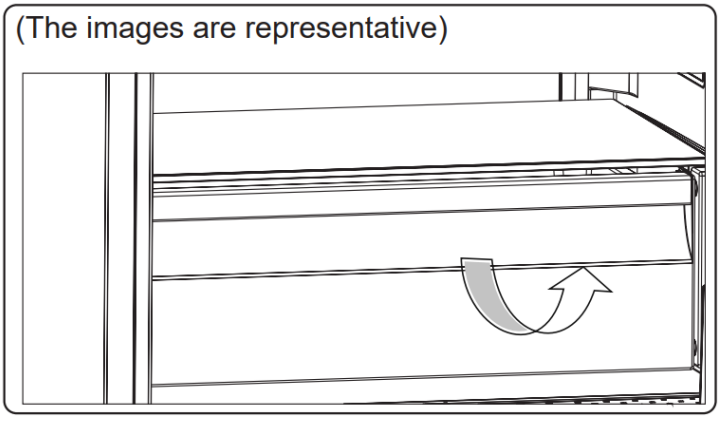

- Pull the chill drawer towards you by sliding it on the rails.
- Pull the chill drawer up from the rail and remove it from the fridge.

The Fresh Dial (in some models)

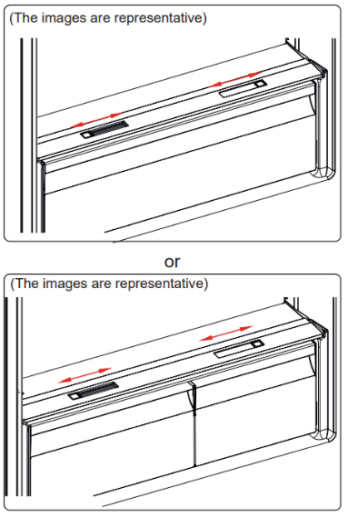

If the crisper is full, the fresh dial located in front of the crisper should be opened. This allows the air in the crisper and the humidity rate to be controlled, to increase the life of food within. The dial, located behind the shelf, must be opened if any condensation is seen on the glass shelf.

Note: Do not load any foodstuff on the fresh dial.

Adjustable door shelf

Six different height adjustments can be made to provide storage areas that you need by adjustable door shelf. To change the position of adjustable door shelf ; Hold the bottom of the shelf and pull the buttons on the side of the door shelf direction of arrow. (Fig.1)

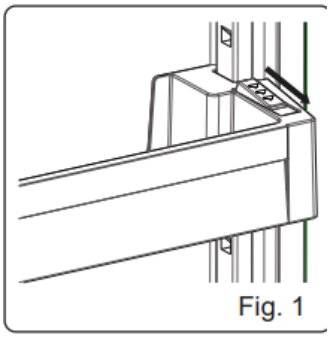
Fig. 1

Position door shelf the height you need by moving up and down. After you get the position that you want the door shelf, release the buttons on the side of the door shelf (Fig.2) Before releasing the door shelf, move up down and make sure the door shelf is fixed.

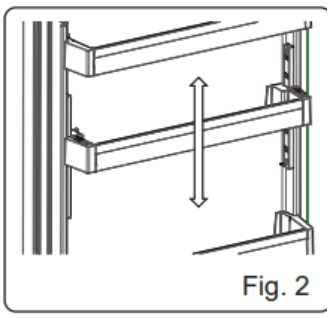
Fig. 2

NOTE : Before moving door shelf is loaded, you must hold the shelf by supporting the bottom. Otherwise, door shelf could fall off the rails due to the weight. So damage may occur on the door shelf or rails.

VitaMod (If available)

VitaMod is able to promote retaining vitamin C content and keep fruit and vegetables fresh due to having a special LED that more closely matches the spectrum of natural sunlight.

Ultrafresh (if available)

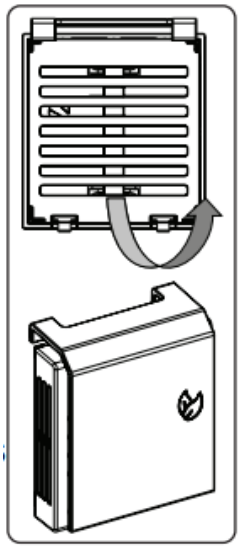

Ultrafresh technology helps to remove ethylene gas (a volatile organic compound released naturally from fresh foods) and unpleasant odors from the crisper. In this way, food stays fresh for a longer time.

- Ultrafresh must be cleaned once in a year. The filter should be waited for 2 hours at 65°C in a oven.
- To clean the filter, please remove the back cover of the filter box by pulling it in the direction of the arrow.
- The filter should not be washed with water or any detergent.

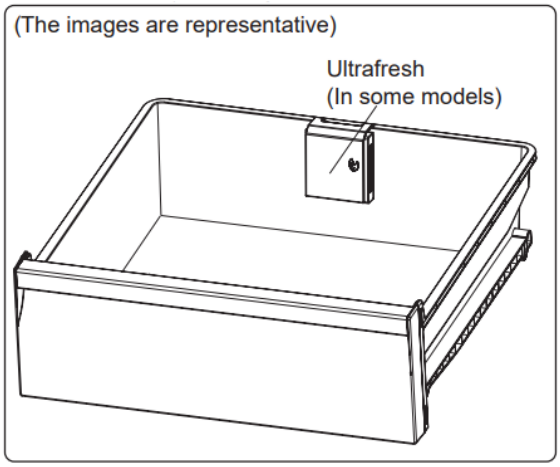

Refrigerator Comparment

For normal operating conditions, set the temperature of the cooler compartment to +4 or +6 o C.

- To reduce humidity and avoid the EN - 21 consequent formation of frost, always store liquids in sealed containers in the refrigerator. Frost tends to concentrate in the coldest parts of the evaporating liquid and, in time, your appliance will require more frequent defrosting.
- Cooked dishes must remain covered when they are kept in the fridge.Do not place warm foods in fridge.Place them when they are cool, otherwise the temperature/humidity inside the fridge will increases, reducing the fridge's efficiency.
- Make sure no items are in direct contact with the rear wall of the appliance as frost will develop and packaging will stick to it. Do not open the refrigerator door frequently.
- We recommend that meat and clean fish are loosely wrapped and stored on the glass shelf just above the vegetable bin where the air is cooler, as this provides the best storage conditions.
- Store loose fruit and vegetable items in the crisper containers.
- Storing fruit and vegetables separately helps prevent ethylene-sensitive

vegetables (green leaves, broccoli, carrot, etc.) being affected by ethylenereleaser fruits (banana, peach, apricot, fig etc.).

- Do not put wet vegetables into the refrigerator.
- Storage time for all food products depends on the initial quality of the food and an uninterrupted refrigeration cycle before refrigerator storage.
- Water leaking from meat may contaminate other products in the refrigerator. You should package meat products and clean any leakages on the shelves.
- Do not put food in front of the air flow passage.
- Consume packaged foods before the recommended expiry date.

  Do not allow food to come into contact with the temperature sensor, which is located in the refrigerator compartment, in order to keep the refrigerator compartment at optimum temperature. • For normal working conditions, it will be sufficient to adjust the temperature setting of your refrigerator to +4 °C.
- For normal working conditions, it will be sufficient to adjust the temperature setting of your refrigerator to +4 °C.
- The temperature of the fridge compartment should be in the range of 0-8 °C, fresh foods below 0 °C are iced and rotted, bacterial load increases above 8 °C, and spoils.
- Do not put hot food in the refrigerator immediately, wait for the temperature to pass outside. Hot foods increase the degree of your refrigerator and cause food poisoning and unnecessary spoiling of the food.
- Meat, fish, etc. should be store in the chiller compartment of the food, and the vegetable compartment is preferred for vegetables. (if available).
- To prevent cross contamination, meat products and fruit vegetables are not stored together.
- Foods should be placed in the refrigerator in closed containers or covered to prevent moisture and odors

The table below is a quick guide to show you the most efficient way to store the major food groups in you refrigerator comparment.

Food	Maximum storage time	How and where to store
Vegetables and fruits	1 week	Vegetable bin
Meat and fish	2 - 3 days	Wrap in plastic foil, bags, or in a meat container and store on the glass shelf
Fresh cheese	3 - 4 days	On the designated door shelf
Butter and margarine	1 week	On the designated door shelf
Bottled products e.g. milk and yoghurt	Until the expiry date recommended by the producer	On the designated door shelf
Eggs	1 month	On the designated egg shelf
Cooked food	2 days	All shelves

Freezer Compartment

For normal operating conditions, set the temperature of the freezer compartment to -18 or -20 o C.

- The freezer is used for storing frozen food, freezing fresh food, and making ice cubes.
- Food in liquid form should be frozen in plastic cups and other food should be frozen in plastic folios or bags.For freezing fresh food; wrap and seal fresh food properly, that is the packaging should be air tight and shouldn’t leak. Special freezer bags, aluminum foil polythene bags and plastic containers are ideal.
- Do not store fresh food next to frozen food as it can thaw the frozen food.
- Before freezing fresh food, divide it into portions that can be consumed in one sitting.
- Consume thawed frozen food within a short period of time after defrosting • Always follow the manufacturer's instructions on food packaging when storing frozen food. If no information is provided food, should not be stored for more than 3 months from the date of purchase.
- When purchasing frozen food, make sure that it has been stored under appropriate conditions and that the packaging is not damaged.
- Frozen food should be transported in appropriate containers and placed in the freezer as soon as possible.
- Do not purchase frozen food if the packaging shows signs of humidity and

abnormal swelling. It is probable that it has been stored at an unsuitable temperature and that the contents have deteriorated.

- The storage life of frozen food depends on the room temperature, the thermostat setting, how often the door is opened, the type of food, and the length of time required to transport the product from the shop to your home. Always follow the instructions printed on the packaging and never exceed the maximum storage life indicated.
- If the freezer door has been left open for a long time or not closed properly, frost will form and can prevent efficient air circulation. To resolve this, unplug the freezer and wait for it to defrost. Clean the freezer once it has fully defrosted.
- The freezer volume stated on the label is the volume without baskets, covers, and so on.
- Do not refreeze thawed food. It may pose a danger to your health and cause problems such as food poisoning.

NOTE : if you attempt to open the freezer door immediately after closing it, you will find that it will not open easily. This is normal. Once equilibrium has been reached, the door will open easily. Use the fast freezing shelf to freeze home cooking (and any other food which needs to be frozen quickly) more quickly because of the freezing shelf’s greater freezing power. Fast freezing shelf is the upper shelf of the freezer compartment.

The table below is a quick guide to show you the most efficient way to store the major food groups in your freezer compartment.

Meat and fish	Preparation	Maximum storage time (months)
Steak	Wrap in foil	6 - 8
Lamb meat	Wrap in foil	6 - 8
Veal roast	Wrap in foil	6 - 8
Veal cubes	In small pieces	6 - 8
Lamb cubes	In pieces	4 - 8
Minced meat	In packaging without using spices	1 - 3
Giblets (pieces)	In pieces	1 - 3
Bologna sausage/salami	Should be kept packaged even if it has a membrane	1 - 3
Chicken and turkey	Wrap in foil	4 - 6
Goose and duck	Wrap in foil	4 - 6
Deer, rabbit, wild boar	In 2.5 kg portions or as fillets	6 - 8
Freshwater fish (Salmon, Carp, Crane, Catfish)	After cleaning the bowels and scales of the fish, wash and dry it. If necessary, remove the tail and head.	2
Lean fish (Bass, Turbot, Flounder)		4
Fatty fishes (Tuna, Mackerel, Bluefish, Anchovy)		2 - 4
Shellfish	Clean and in a bag	4 - 6
Caviar	In its packaging, or in an aluminium or plastic container	2 - 3
Snails	In salty water, or in an aluminium or plastic container	3
NOTE: Thawed frozen meat should be cooked as fresh meat. If the meat is not cooked after defrosting, it must not be re-frozen.		

Vegetables and Fruits	Preparation	Maximum storage time (months)
String beans and beans	Wash, cut into small pieces and boil in water	10 - 13
Beans	Hull, wash and boil in water	12
Cabbage	Clean and boil in water	6 - 8
Carrot	Clean, cut into slices and boil in water	12
Pepper	Cut the stem, cut into two pieces, remove the core and boil in water	8 - 10
Spinach	Wash and boil in water	6 - 9
Cauliflower	Remove the leaves, cut the heart into pieces and leave it in water with a little lemon juice for a while	10 - 12
Eggplant	Cut into pieces of 2cm after washing	10 - 12
Corn	Clean and pack with its stem or as sweet corn	12
Apple and pear	Peel and slice	8 - 10
Apricot and Peach	Cut into two pieces and remove the stone	4 - 6

Vegetables and Fruits	Preparation	Maximum storage time (months)
Strawberry and Blackberry	Wash and hull	8 - 12
Cooked fruits	Add 10 % of sugar to the container	12
Plum, cherry, sourberry	Wash and hull the stems	8 - 12

	Maximum storage time (months)	Thawing time at room temperature (hours)	Thawing time in oven (minutes)
Bread	4 - 6	2 - 3	4-5 (220-225 °C)
Biscuits	3 - 6	1 - 1,5	5-8 (190-200 °C)
Pastry	1 - 3	2 - 3	5-10 (200-225 °C)
Pie	1 - 1,5	3 - 4	5-8 (190-200 °C)
Phyllo dough	2 - 3	1 - 1,5	5-8 (190-200 °C)
Pizza	2 - 3	2 - 4	15-20 (200 °C)

Dairy products	Preparation	Maximum storage time (months)	Storage conditions
Packet (Homogenized) Milk	In its own packet	2 - 3	Pure Milk – in its own packet
Cheese - excluding white cheese	In slices	6 - 8	Original packaging may be used for short-term storage. Keep wrapped in foil for longer periods.
Butter, margarine	In its packaging	6	

CARE & CLEANING

Cleaning

Disconnect the unit from the power supply before cleaning.
Do not wash your appliance by pouring water on it.
Do not use abrasive products, detergents or soaps for cleaning the appliance. After washing, rinse with clean water and dry carefully. When you have finished cleaning, reconnect the plug to the mains supply with dry hands.

- Make sure that no water enters the lamp housing and other electrical components.
- The appliance should be cleaned regularly using a solution of bicarbonate of soda and lukewarm water.
- Clean the accessories separately by hand with soap and water. Do not wash accessories in a dish washer.
- Clean the condenser with a brush at least twice a year. This will help you to save on energy costs and increase productivity.

The power supply must be disconnected during cleaning.

Defrosting

- Your appliance performs automatic defrosting. The water formed as a result of defrosting passes through the water collection spout, flows into the water tray behind your appliance and evaporates there.
- Make sure you have disconnected the plug of your appliance before cleaning the water tray.
- Remove the water tray from its position by removing the screws (if it has screws)

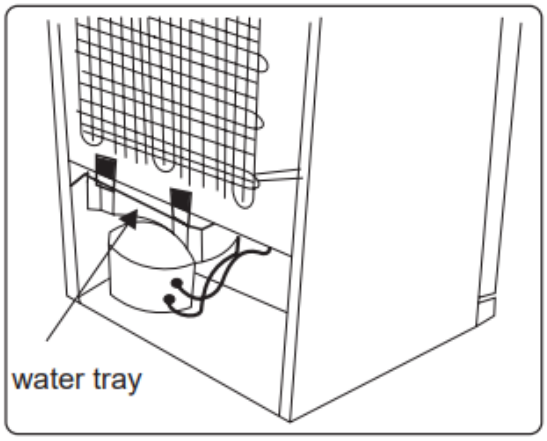

Replacing LED Lighting

To replace any of the LEDs, please contact the nearest Authorised Service Centre.
The product is equipped with **LED Strip(s) or LED card(s).**
This product contains a light source of energy efficiency class **<F>**.

NOTE: The numbers and location of the LED strips may change according to the mode.

BEFORE CALLING AFTER-SALES SERVICE

Error

Your fridge will warn you if the temperatures for the cooler and freezer are at improper levels or if a problem occurs with the appliance. Warning codes are displayed in the freezer and cooler indicators.

ERROR TYPE	MEANING	WHY	WHAT TO DO
E01	Sensor warning		Call Service for assistance as soon as possible.
E02	Sensor warning		Call Service for assistance as soon as possible.
E03	Sensor warning		Call Service for assistance as soon as possible.
E06	Sensor warning		Call Service for assistance as soon as possible.
E07	Sensor warning		Call Service for assistance as soon as possible.
E08	Low Voltage Warning	Power supply to the device has dropped to below 170 V.	- This is not a device failure, this error helps to prevent damages to the compressor. - The voltage needs to be increased back to required levels If this warning continues an authorised technician needs to be contacted.
E09	Freezer compartment is not cold enough	Likely to occur after long term power failure.	4. Set the freezer temperature to a colder value or set Super Freeze. This should remove the error code once the required temperature has been reached. Keep doors closed to improve time taken to reach the correct temperature. 5. Remove any products which have thawed/defrosted during this error. They can be used within a short period of time. 6. Do not add any fresh produce to the freezer compartment until the correct temperature has been reached and the error is no longer. If this warning continues an authorised technician needs to be contacted.

ERROR TYPE	MEANING	WHY	WHAT TO DO
E10	Fridge compartment is not cold enough	**Likely to occur after:** - Long term power failure. - Hot food has been left in the fridge.	1. Set the fridge temperature to a colder value or set Super Cool. This should remove the error code once the required temperature has been reached. Keep doors closed to improve time taken to reach the correct temperature. 2. Please empty the location at the front area of air duct channel holes and avoid putting food close to the sensor. If this warning continues an authorised technician needs to be contacted.
E11	Fridge compartment is too cold	Various	1. Check is Super Cool mode is activated 2. Reduce the fridge compartment temperature 3. Check to see if vents are clear and not clogged If this warning continues an authorised technician needs to be contacted.

If you are experiencing a problem with your appliance, please check the following before contacting the after-sales service.

You rappliance is not operating.

Check if :

- There is power
- The plug fuse or the mains fuse has blown.
- The socket is defective. To check this, plug another working appliance into the same pocket.

The appliance performs poorly

Check if :

- The appliance is overloaded
- The appliance door is closed properly
- There is any dust on the condenser
- There is enough space near the rear and side walls.

Your appliance is operating noisily

Normal noises

Cracking noise occurs :

- During automatic defrosting
- When the appliance is cooled or warmed (due to expansion of appliance material)

Short cracking noise occurs: When the thermostat switches the compressor on/off.

Motor noise: Indicates the compressor is operating normally. The compressor may cause more noise for a short time when it is first activated.

Bubbling noise and splash occurs: Due to the flow of the refrigerant in the tubes of the system.

Water flowing noise occurs: Due to water flowing to the evaporation container. This noise is normal during defrosting.

Air blowing noise occurs: In some models during normal operation of the system due to the circulation of air.fridge will warn you if the temperatures for the cooler and freezer are at improper levels or if a problem occurs with the appliance. Warning codes are displayed in the freezer and cooler indicators.

The edges of the appliance in contact with the door joint are warm.
Especially during summer (warm seasons), the surfaces in contact with the door joint may become warmer during the operation of the compressor, this is normal.
There is a build-up of humidity inside the appliance.
Check if:

- All food is packed properly. Containers must be dry before being placed in the **appliance.**
- The **appliance** door is opened frequently. Humidity of the room enters the appliance when the doors are opened. Humidity increases faster when the doors are opened more frequently, especially if the humidity of the room is high.

The door does not open or close properly.
Check if :

- There is food or packaging preventing the door from closing
- The door joints are broken or torn
- Your appliance is on a level surface.
- The compressor can run loudly or the noise of the compressor/refrigerator may increase in some models during operating in some conditions such that the product is plugged in for the first time, depending on change in the ambient temperature or change of usage. That is normal; when the refrigerator reaches the required temperature, the noise decreases automatically.

Recommendations

- If the appliance is switched off or unplugged, wait at least 5 minutes before plugging the appliance in or restarting it in order to prevent damage to the compressor.
- If you will not use your appliance for a long time (e.g. in summer holidays) unplug it. Clean your appliance according to chapter cleaning and leave the door open to prevent humidity and smell.
- If a problem persists after you have followed all the above instructions, please consult the nearest authorised service centre.
- The appliance you have purchased is designed for domestic use only. It is not suitable for commercial or common use. If the consumer uses the appliance in a way that does not comply with this, we emphasise that the manufacturer and the dealer will not be responsible for any repair and failure within the guarantee period.

Technical data

The technical information is situated in the rating plate on the internal side of the appliance and on the energy label. Keep the energy label for reference together with the user manual and all other documents provided with this appliance.

Original replacement parts

During servicing, ask for only original spare parts to be used.

The minimum length of time for making available spare parts listed in European Regulation 2019-2019-EU and accessible especially to the appliance user is 10 years under the terms set out in the above regulation.

Guarantee

Please contact your reseller to benefit from the guarantee. The manufacturer does not offer any commercial guarantee for the refrigeration appliance.