Westinghouse

USER MANUAL

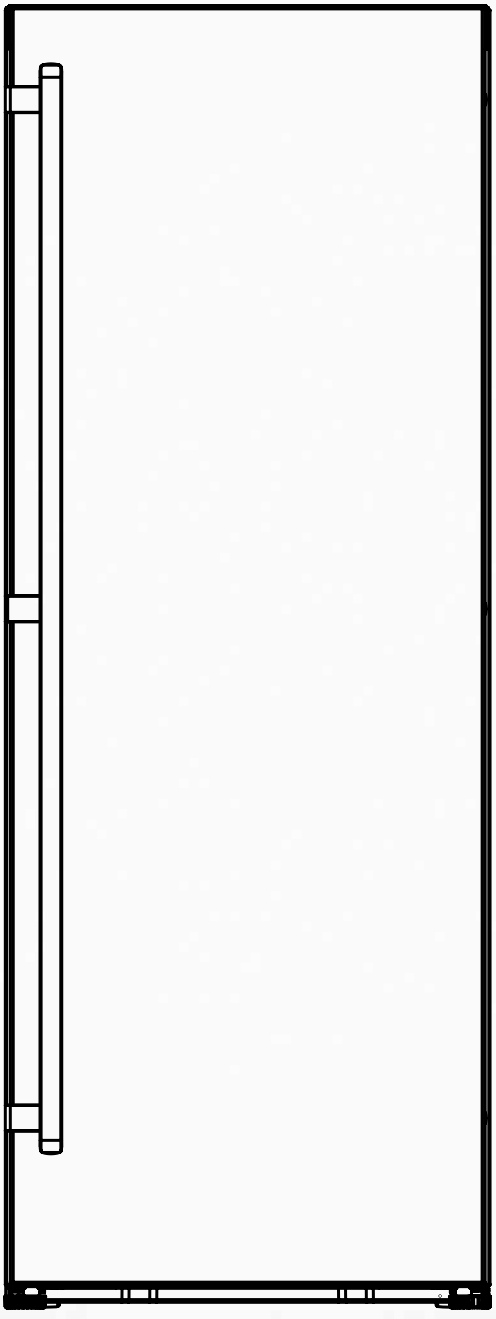

SINGLE DOOR REFRIGERATOR

WRB3504S, WRB3504W

CONGRATULATIONS

Dear customer,

Congratulations on the purchase of your new refrigerator.

Before you use the refrigerator, we recommend that you read through the whole user manual which provides the description of the microwave and its functions.

To avoid the risks that are always present when you use an electrical appliance, it is important that the refrigerator is installed correctly and that you read the safety instructions carefully to avoid misuse and hazards.

We recommend that you keep this instruction booklet for future reference and pass it on to any future owners.

After unpacking the appliance, please check it is not damaged. If in doubt, do not use the appliance but contact your local Customer Care Centre.

For contact details, refer to the last page of this user manual.

Conditions of use

This appliance is designed and intended to be used in normal domestic applications only.

Please ensure you read the instruction manual fully before you call for service, or a full service fee could be applicable.

Record model and serial number here:

Model number:.....

Serial number:.....

PNC:.....

CONTENTS

General warnings....3
Important safety instructions....4
Product description....5
Installing your refrigerator....6
Reversing the door....8
Initial start up....10
Electronic controls....11
Features of your refrigerator....12
Care and maintenance....13
Food storage tips....14
Troubleshooting....15
Notes....17
Warranty....19

Please read the user manual carefully and store in a handy place for later reference.

The symbols you will see in this booklet have these meanings:

WARNING
This symbol indicates information concerning your personal safety.

CAUTION
This symbol indicates information on how to avoid damaging the appliance.

IMPORTANT
This symbol indicates tips and information about use of the appliance.

ENVIRONMENT
This symbol indicates tips and information about economical and ecological use of the appliance.

GENERAL WARNINGS

Please read the user manual carefully and store in a handy place for later reference. Pass the user manual on to possible new owners of the appliance.

Read the following carefully to avoid damage or injury.

Note! **You must read these warnings carefully before installing or using the appliance. If you need assistance, contact your Customer Care Department. The manufacturer will not accept liability, should these instructions or any other safety instructions incorporated in this book be ignored.**

R600A REFRIGERANT WARNING

- This appliance may contain flammable R600a refrigerant. Avoid safety hazards by carefully installing, handling, servicing and disposing of this appliance. If your appliance contains R600a it will be indicated on the rating plate inside the appliance.
- Ensure that the tubing of the refrigerant circuit is not damaged during transportation and installation.
- In the event any damage accidentally occurs, keep the appliance away from open fires and any devices that produce sparks or arcs and luminaries during normal or abnormal operation, and unplug the appliance at the power point. Call authorised service for necessary action and advice.
- Leaking refrigerant may ignite vent area if leak occurs.
- The room for installing appliance must be at least 1m3 per 8g of refrigerant. The amount and type of refrigerant in the appliance can be found on the rating plate inside the appliance.
- Do not damage the refrigerant circuit.
- Do not use electrical appliances inside the food storage compartments of the appliance, unless they are of the type recommended by the manufacturer.

WARNING

It is hazardous for anyone other than an authorised service person to service this appliance. In Queensland the authorised service person MUST hold a gas work authorisation for hydrocarbon refrigerants to carry out servicing or repairs which involve the removal of covers.

WARNING

Risk of suffocation, injury or permanent disability.

- When you dispose of your old refrigerators and freezers, remove any doors. Children can suffocate if they get trapped inside.
- This appliance is not intended for use by persons (including children) with reduced physical, sensory or mental capabilities, or lack of experience and knowledge, unless they have been given supervision or instruction concerning use of the appliance by a person responsible for their safety. Children should be supervised to ensure that they do not play with the appliance.
- Don't use a steam cleaner. If live components come into contact with condensing steam, they may short-circuit or cause an electric shock.
- Do not use mechanical devices or other means to accelerate the defrosting process other than those recommended by the manufacturer
- This appliance contains insulation formed with flammable blowing gases. Avoid safety hazards by carefully disposing of this appliance'.
- If pressurised aerosol containers bear the word 'flammable' and/or a small flame symbol, do not store them inside any refrigerator or freezer. If you do so you may cause an explosion.



WARNING

Risk of fire and electrical shock.

- All electrical connections should be made by a qualified electrician.
- The appliance must be earthed.
- Make sure that the electrical information on the rating plate agrees with the power supply. If not, contact an electrician.
- Connect the mains plug to the mains socket only at the end of the installation. Make sure that there is access to the mains plug after the installation.
- Make sure not to cause damage to the mains plug and to the mains cable. Contact the Service Centre or an electrician to change a damaged mains cable.

GENERAL WARNINGS

Read the following carefully to avoid damage or injury

It is important to use your refrigerator safely. Check these safety points before using your refrigerator.

- The appliance must be plugged into its own dedicated 220-240V, 50Hz AC electrical outlet.
- The plug must be accessible when the refrigerator is in position.
- It is essential the power point is properly earthed to ground. Consult a qualified electrician if you are unsure.
- Don't use extension cords or adapter plugs with this refrigerator.
- If the power cord is damaged, it must be replaced by the manufacturer, its service agent or similarly qualified persons in order to avoid a hazard.
- Unplug the appliance before cleaning and before changing the light bulb to avoid electric shock.
- Never unplug the refrigerator by pulling the electrical cord as this may damage it. Grip the plug firmly and pull straight out.
- Choose a location for your refrigerator that isn't too cold. The ambient room temperature should be above 10°C.
- Stand your refrigerator in a dry place – avoid areas of high moisture or humidity.
- Don't put the refrigerator in frosty or unprotected areas like a garage or on the verandah.
- Don't plug your refrigerator into a timer fitted to the power point.
- Do not put the refrigerator in direct sunlight, near stoves, fires or heaters.
- Do not put the refrigerator on an uneven surface.
- Do not store explosive substances such as aerosol cans with a flammable propellant in this appliance.
- Never store fizzy drinks in the freezer compartment.
- Never try to repair the refrigerator yourself, only use a qualified or authorised service person for repairs.
- Never use electric heaters or dryers to defrost the freezer because you can receive an electric shock.
- When transporting and installing the refrigerator, care should be taken to ensure that no parts of the refrigerating circuit are damaged.
- Keep ventilation openings in the appliance enclosure or in the built-in structure clear of obstruction.
- When installed correctly, your refrigerator should:
  - Have adequate space at the back and sides for air circulation (refer to page 5).
  - Be vertically aligned to the surrounding cupboards.
  - Have doors that will self-close from a partially open position.

Note! You must read these warnings carefully before installing or using the refrigerator. If you need assistance, contact your Customer Care Department. The manufacturer will not accept liability, should these instructions or any other safety instructions incorporated in this book be ignored.

Care and cleaning

⚠ WARNING

Risk of injury, fire or damage to the appliance.

- Before maintenance, deactivate the appliance and disconnect the mains plug from the mains socket.
- Regularly clean the appliance to prevent the deterioration of the surface material.
- Do not allow food spills or cleaner residue to accumulate on door sealing surfaces.
- Remaining fat or food in the appliance can cause smoke/fire, particularly on the grill element.
- Clean the appliance with a moist soft cloth. Only use neutral detergents. Do not use abrasive products, abrasive cleaning pads, solvents or metal objects.

Disposal

⚠ WARNING

Risk of injury or suffocation through misuse of packaging and/or discarded product.

- Disconnect the appliance from the mains supply.
- Cut off the mains cable and discard it.

PRODUCT DESCRIPTION

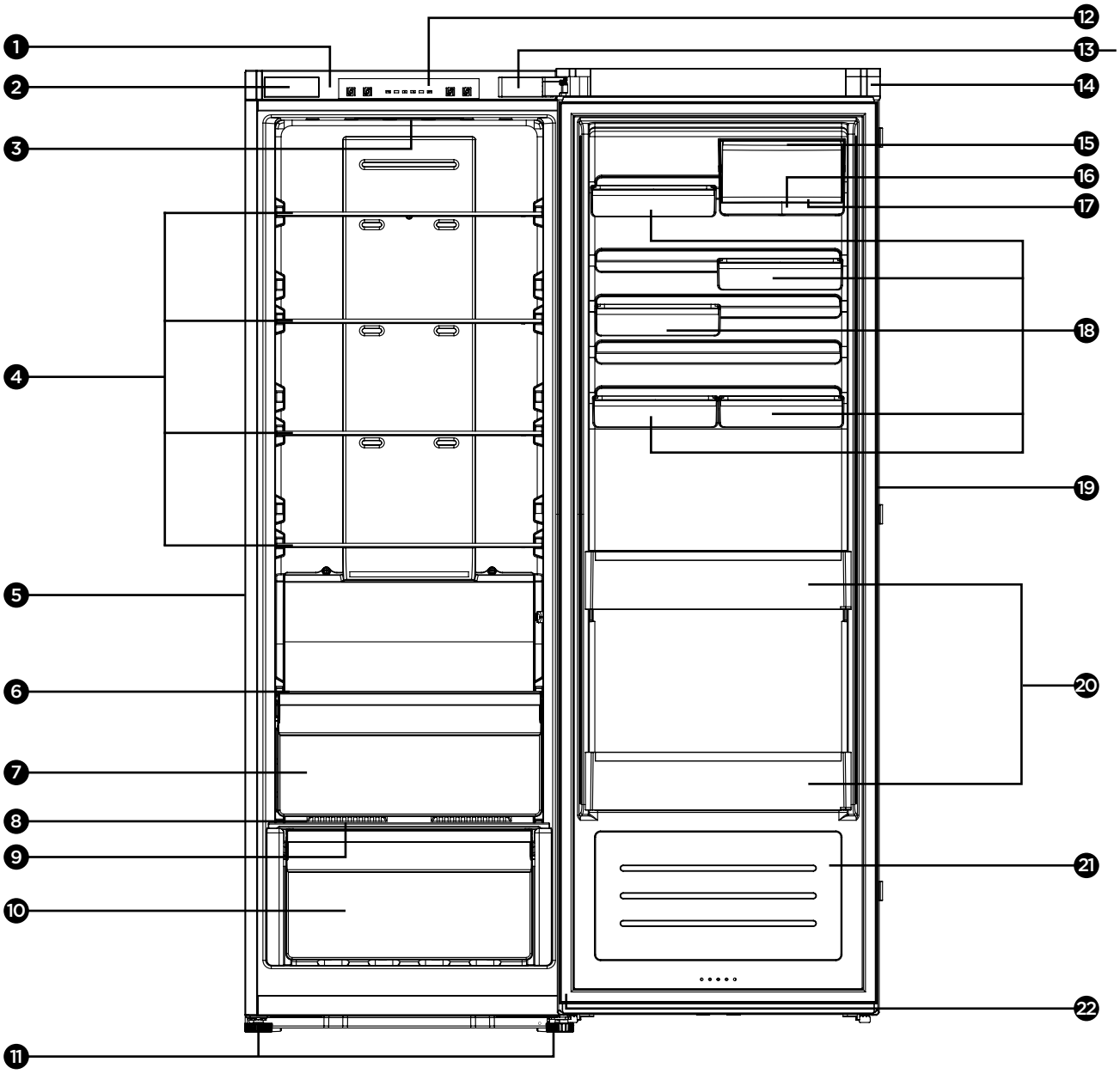

1. Upper cover
2. Block cover
3. LED light
4. Glass shelf
5. Cabinet
6. Small glass shelf
7. Crisper box
8. Crisper cover
9. Humitidity control slider
10. Moisture fresh crisper
11. Adjustable bottom feet
12. Control panel
13. Hinge cover
14. Corner cover
15. Dairy lid
16. Dairy body
17. Egg tray (inside)
18. Small door bin
19. Handle
20. Lower door bin
21. Fridge door
22. Gasket

Note! Your refrigerator may differ slightly from this illustration but the functions and operation will remain the same.

Note: To achieve the optimum energy efficiency from this product, please place all shelves, drawers and baskets in their original position as per the illustration above.

INSTALLING YOUR REFRIGERATOR

Adequate ventilation around your refrigerator.

The diagram below shows the recommended airspace to allow for ventilation of your refrigerator.

If you don't have a cupboard with a rear gap, the recommended clearance area on top increases from 50mm to 90mm (x) and from 32mm to 72mm (y). When positioned in a corner area, spacing of at least 350mm on the hinge side will allow the doors to open enough to enable the removal of bins and shelves.

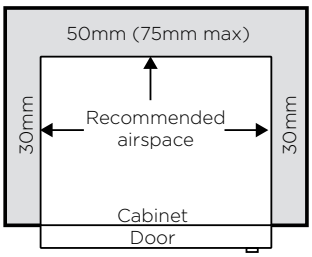

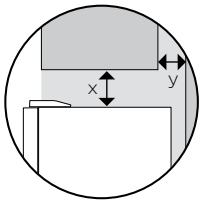

Note: Doors are designed to sit proud of cabinetry (not flush).

The clearances shown above are the recommended minimum clearances. The clearance at the rear must not exceed 75mm.

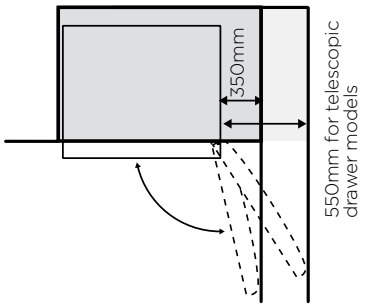

Your new refrigerator should arrive with the front adjustable rollers wound down, to tilt the top backwards by about 10mm from upright. This will allow your refrigerator door to self-close, providing a consistent closed seal.

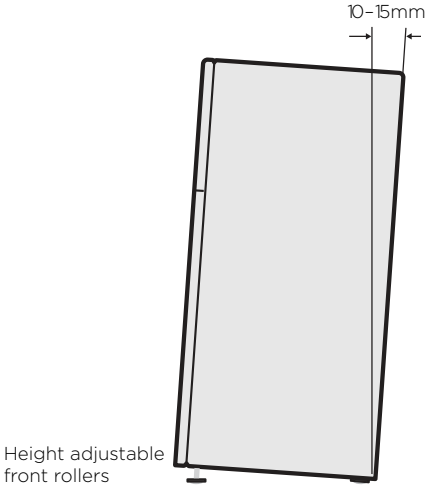

The stability foot should also be wound fully up so it will not interfere with the operation of the rollers.

CAUTION

The rollers are designed for forward or backward movement only. They are not castors. Moving the refrigerator sideways may damage your floor and the rollers.

1. Roll the refrigerator into place.
2. The top of the refrigerator should be tilted back by 10mm (see diagram on left). This will allow the doors to self-close providing a consistent door seal.
3. If the refrigerator isn't tilted back, you can adjust the two front rollers by turning the large, plastic roller nut (see diagram below). One turn of the nut increases the height of the refrigerator by 10mm. If you have difficulty turning the roller nut, have someone tilt the refrigerator back, so you have better access. Alternatively, you can access the rollers from the side, using a flat screwdriver (see diagram below).

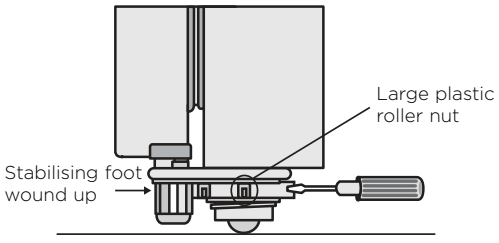

INSTALLING YOUR REFRIGERATOR

4. Check the alignment of the refrigerator to the surrounding cupboards to see if it is level. You can adjust the level with the rollers as detailed in step 3.

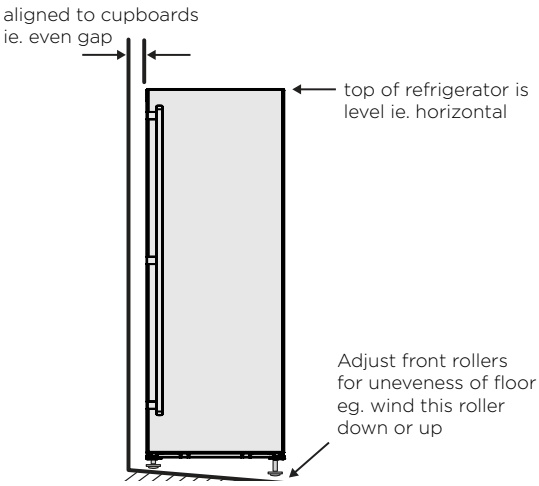

5. If you find your refrigerator rocks from corner to corner, it means your floor is uneven. Find a piece of plastic or hardboard etc. and pack it firmly under the roller.

6. On certain floor surfaces the refrigerator may roll forward during operation. Where provided a "Roller Stop" can be placed under the front rollers. If Roller Stop is required, contact customer service on 1300 363 640.

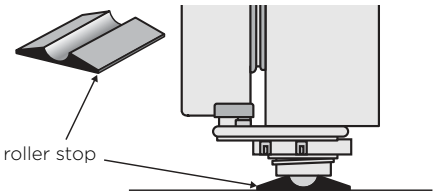

7. You may now need to fine-tune the installation by repeating Steps 3, 4 and 5.

8. When you have the appliance in its final position, it needs to be stablisied. Wind the stability foot down to the floor until it just makes contact with the floor. Lift the front of the appliance to take the weight off the stability foot, then turn it ¼ turn further to ensure firm contact with the floor. Whenever you need to move the appliance, be sure to wind the foot back up so that the appliance can roll freely and be sure to reset it when reinstalling.

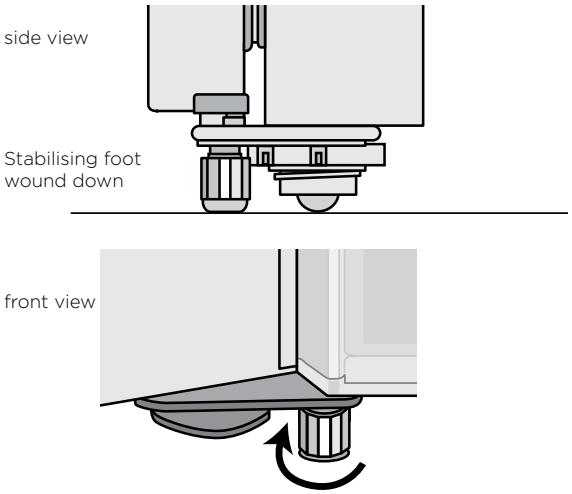

9. Clean your refrigerator thoroughly following the instructions on page 16 and wipe off any dust that has accumulated during shipping.

10. Plug your refrigerator straight into its own powerpoint and never use a double adapter. If you need to roll the refrigerator to get to the plug, remember to raise the stability foot first.

11. Before you put any food in your refrigerator, it's recommended you leave it on for 2 or 3 hours to check it is running properly.

Congratulations! You have successfully installed your new refrigerator.

REVERSING THE DOOR

If the position your fridge occupies would be better suited to a reverse opening arrangement, carefully follow these diagrams and instructions. The reversing of doors or replacement of light bulbs is not covered by warranty.

Tools you will need:

- 8mm socket driver
- Cross-shaped screwdriver
- Putty knife or thin-blade screwdriver
- 3mm allen key

Precautions

- Turn off the appliance
- Unplug the power cable

1. Remove the hinge cover and the block cover from the refrigerator body, then remove the cover plate from the door. Using the 8mm wrench, remove the special flange self tapping screws and the hinge.

Note: Please hold on to the refrigerator door to prevent door dropping.

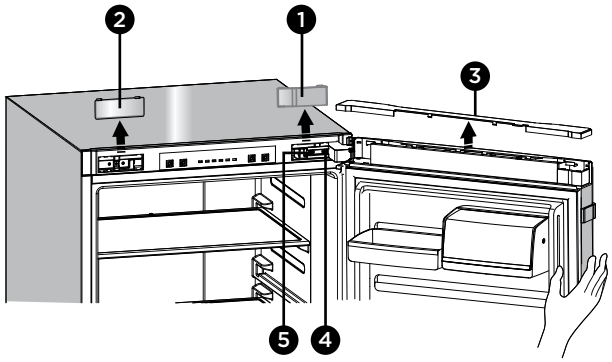

1. Hinge cover
2. Block cover
3. Cover plate
4. Special flange self tapping screw
5. Upper hinge

2. Remove the door and place it carefully on a smooth surface with the door panel facing upwards.

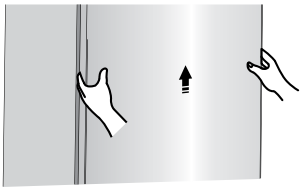

3. Using the 8mm wrench, unscrew and remove the hinge axis.

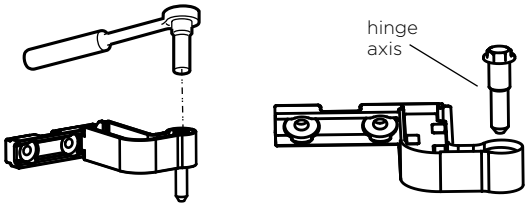

4. Flip the upper hinge over as shown below.



5. Replace the hinge axis and washer.

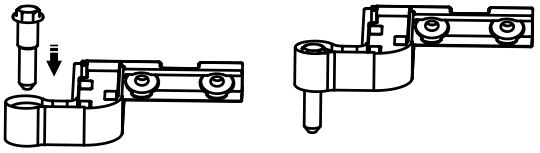

6. Gently lever off the handle covers and remove the screws. Remove the handle and set beside the refrigerator door.

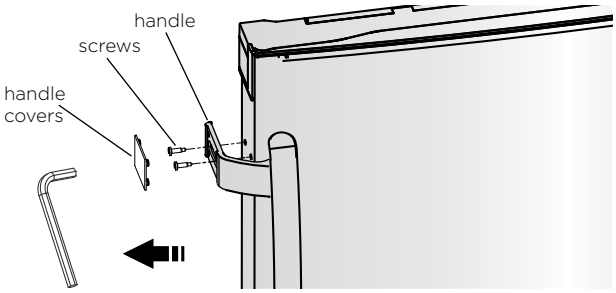

7. Remove the screw hole covers from the opposite side of the door and use them to cover the holes left by the removed screws.

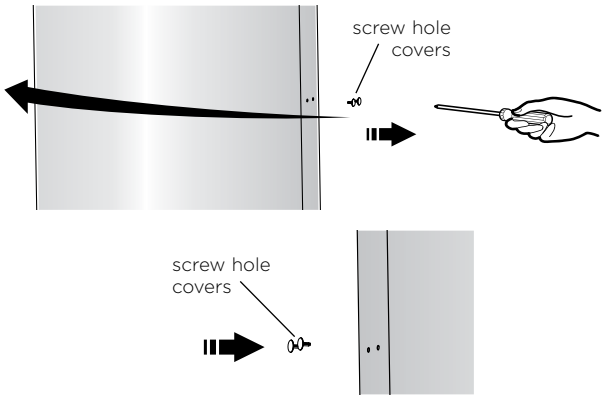

REVERSING THE DOOR (CONTINUED)

8. Change handle to the desired side and reinstall it as shown below.

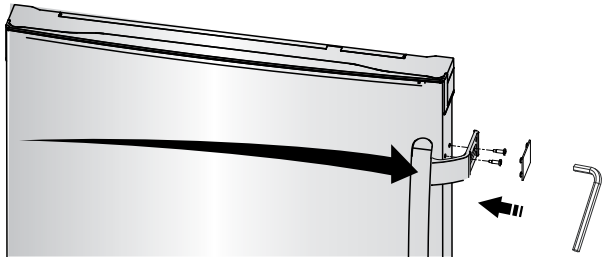

9. Detach door stopper and limit block as shown and reinstall on the opposite side of the door.

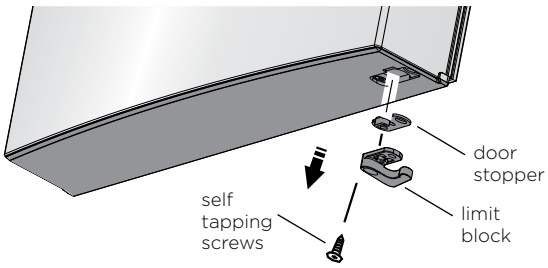

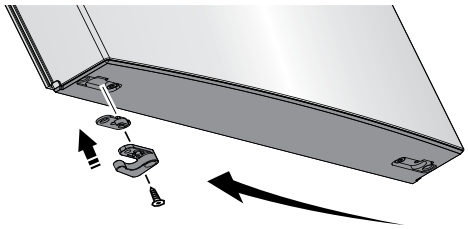

9. You will need to access the bottom of the refrigerator for this part of the installation. Remove the adjustable bottom feet and unscrew the special flange self tapping screws. Unscrew and remove the front foot fixed board and the right lower hinge.

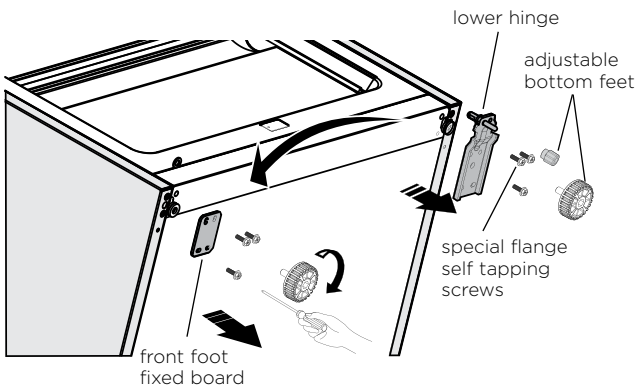

10. Unscrew the washers and remove the lower hinge axis from the far hole and screw it into the near hole as per the picture below. Replace the washer.

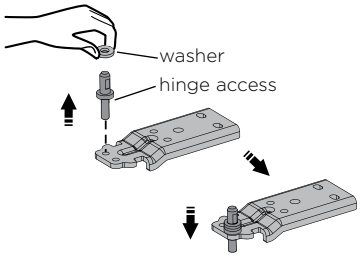

11. Swap the positions of the the front foot fixed board and the right lower hinge and re-attach. Screw in the special flange self tapping screws and replace the adjustable bottom feet.

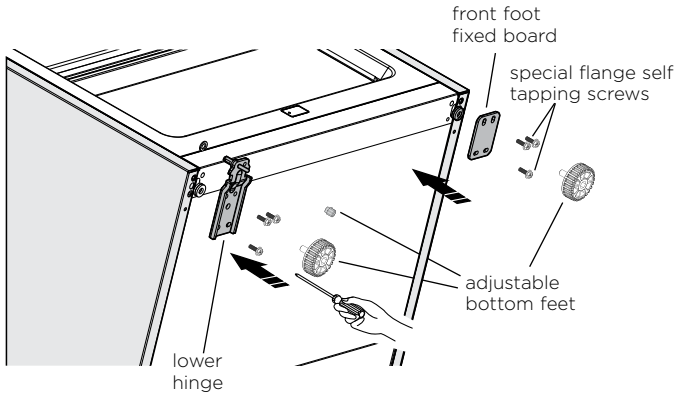

12. Remove the corner cover from the refrigerator door place it to one side.

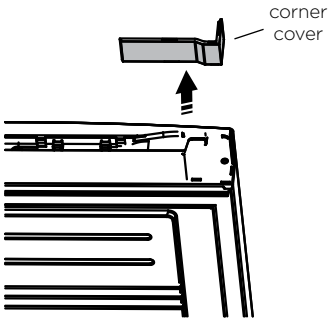

REVERSING THE DOOR

13. Move the refrigerator door to the correct position next to the cabinet and attach with the upper hinge. Screw the hinge into place then fix with the left hinge cover (supplied).

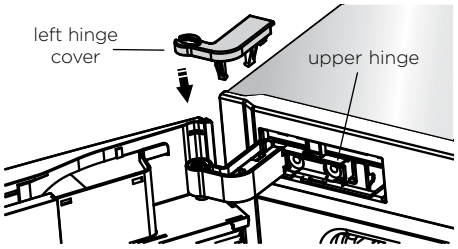

14. Flip the corner cover by 180°and install it onto the left corner of the door as shown.

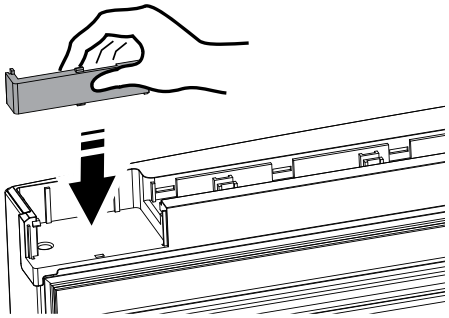

15. Replace the door cover plate removed in Step 1, then re-attach the upper hinge cover and the top cover block to refrigerator body.

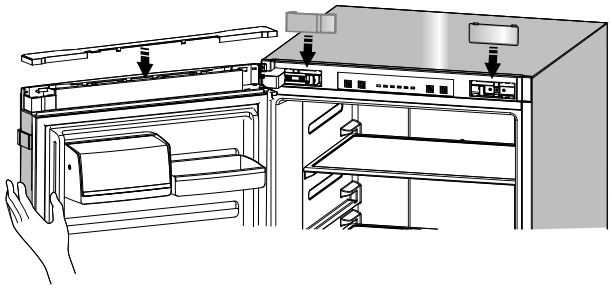

16. The door reversal is now complete.

INITIAL START-UP

Refrigerators work by transferring heat from the food inside to the outside air. This operation makes the back and sides of the refrigerator (particularly at start-up) feel warm – which is normal.

A cooling coil is located behind the rear wall of the freezer section. This coil cools and removes moisture from the air inside.

Avoid placing food against the air vents in the refrigerator, as it affects the efficient circulation. If the door is opened frequently, a light frosting will occasionally occur on the freezer's interior. This is normal and will clear after a few days. If the freezer door is accidentally kept open, a heavy frost will coat the inside walls and should be removed.

Your new refrigerator uses a variable-speed compressor, along with other energy-efficient components, which may make unusual sounds. These sounds simply indicate your refrigerator is working how it should. They include:

- Compressor running noises;
- Air movement noise from the small fan motor;
- A gurgling sound, similar to water boiling;
- A popping noise, heard during automatic defrosting; and
- A clicking noise, prior to compressor start-up.

ELECTRONIC CONTROLS

All functions and controls of the unit are accessible from a control panel conveniently located on the roof of the cabinet. A display circuit board allows easy configuration of features and settings in a simple and intuitive manner.

IMPORTANT

When the refrigerator is energized, all the pilot lights will turn on for 3 sec and you will also hear a long “beep”. The display board consists of four buttons and eight pilot lights. You will hear a short “beep” when you press the button. The electronic controls are located on the inside top section of the cabinet.

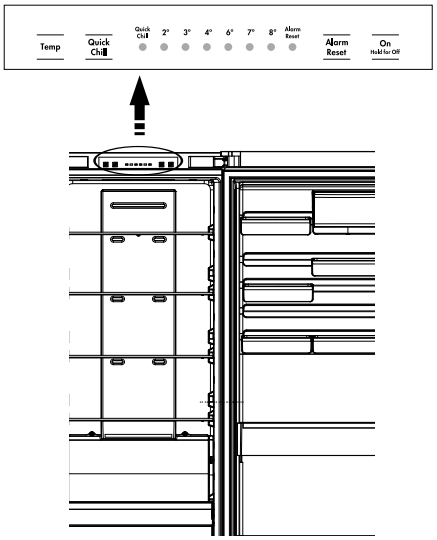

The display panel consists of four buttons and eight display lights. When the refrigerator is turned on all the display lights will turn on for 3 seconds and the refrigerator will emit a long “beep”. A short sound of “beep” will subsequently be heard when pressing any of the buttons after initial start-up.

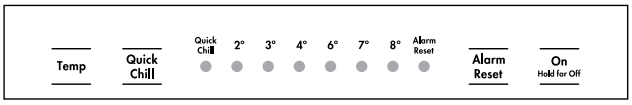

On/Hold for Off

Start the refrigerator by pressing the **On** button. To turn the refrigerator off, press and hold the **On** button. Pressing the **On** button after the refrigerator has been turned off will return the refrigerator to it’s previous setting.

Controlling the temperature

We recommend that when you start your refrigerator for the first time, the temperature for the refrigerator is set to 3°C. If you want to change the temperature, follow the instructions below. Make only small adjustments and wait 24 hours to see if it’s correct.

Checking the coldness of water kept in the refrigerator is a good way of checking the temperature of the food compartment.

NOTE: When you set a temperature, you set an average temperature for the whole refrigerator cabinet.

Temperatures inside each compartment may vary, depending on how much food you store and where you place it. High or low room temperature may also affect the actual temperature inside the refrigerator.

If no button has been pressed for some time there may be a delay of up to 2 seconds before the display responds, this is normal and is a part of the display design to reduce the chance of accidental changes.

To set the fridge temperature, press the **Temp** button until the desired temperature between 8°C and 2°C is illuminated. The light of the corresponding temperature will be lit corresponding values according to the following sequence.

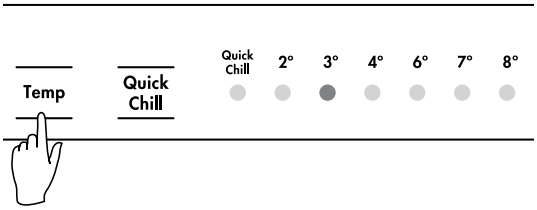

Quick Chill

Use the Quick Chill function when you add a large amount of food to the refrigerator or you need to chill food or drinks quickly. To use this function, press the **Quick Chill** button once. The button will light up and the fridge temperature indicator will display 2°C.

Quick Chill will automatically switch off after 6 hours. You can switch the Quick Chill function off manually by pressing the **Quick Chill** or **Temp** button once.

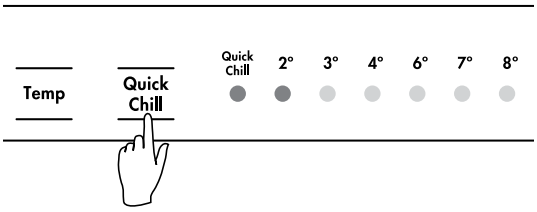

Door alarm

If the refrigerator door is left open for longer than 2 minutes, a buzzer will sound The buzzer will beep 3 times per minute for 10 minutes. Closing the door cancels the door alarm.

To save energy, please avoid keeping the door open for a long time when using the refrigerator.

Alarm Reset

If the alarm sounds, the **Alarm Reset** icon will light up and a buzzing sound will start. Press the **Alarm Reset** button to stop the alarm.

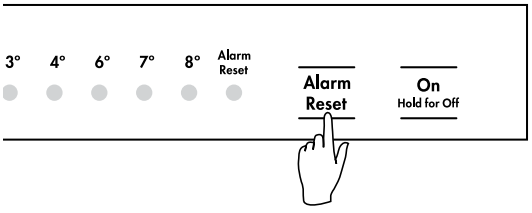

FEATURES OF YOUR REFRIGERATOR

Features

This section tells you how to make the most of the many useful features - cleaning instructions can be found on page 15.

SpillSafe™ glass shelves

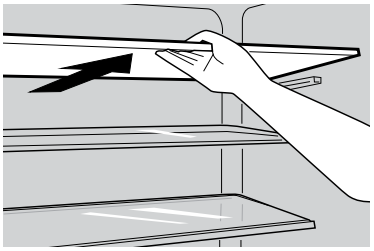

Spillsafe™ glass shelves keep spills on the shelf. A shelf retaining system minimises accidental movement of shelves and they can be adjusted to various heights. Spillsafe™ glass shelves are not to be used as slide out shelves. To remove the shelves, gently pull them forward until the shelf comes out.

Door storage bins

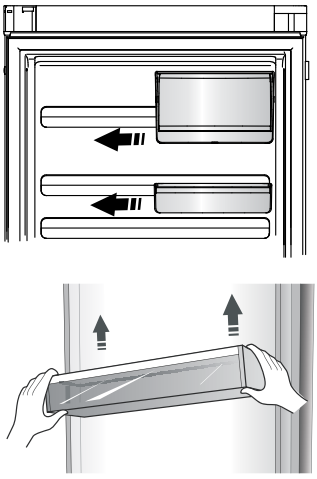

The door storage bins can be adjusted to meet different storage needs. All the door bins are completely removable for cleaning. If you want to remove or adjust a bin, lift it over the support lugs on the inner door panel. To replace, push the bin down over the support lugs to lock it in place.

Crisper bin

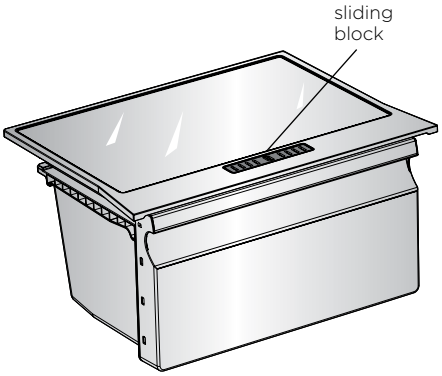

Storing fruit and vegetables

Store fruit and vegetables in the crisper bin for optimal freshness.

NOTE: Crisper temperature can be adjusted by opening or closing the vent using the sliding block. Close the vents if the vegetable temperature is too cold.

CARE AND MAINTENANCE

LED lighting

CAUTION

Your refrigerator is fitted with long life LED lighting. In the unlikely event the LED lights should fail, then the LED lights should be serviced by the manufacturer, it's service agent or similarly qualified technician. Refer to the warranty page for contact details.

When the door is left open for 15 minutes, the LED light will dim to 50% brightness to conserve energy and prolong the life of the LED. If the door is left open for a further 15 minutes, the light will automatically turn off. Close and reopen the door again to turn the light back on.

Cleaning the appliance

WARNING

Before cleaning: Turn appliance off at the power point, then remove power cord from socket. This will make sure there is no chance of getting an electric shock.

- Doors – stainless steel

  This stainless steel has a special advanced protective coating that eases the removal of marks such as finger prints and water spots. To keep your stainless steel appliance looking at its best, you should clean it regularly. You should only clean the stainless steel doors with luke-warm soapy water and a soft cloth, rinsing with clean water and then wipe the surface with clean water and a soft clean cloth to remove soap residue.

- Doors - cabinet & painted doors

  An occasional wipe over with a clean, damp cloth will help remove finger marks. You should only clean the doors with lukewarm, soapy water and a soft cloth. Rinse with clean water and then wipe the surface with a soft, clean cloth to remove any soapy residue.

NOTE: Only wash plastic parts or decorative trim with warm (not hot) water using an unscented detergent.

CAUTION

Do not use stainless steel cleaners, abrasive pads or other cleaners as they are likely to scratch the surface. Damage to this product after delivery is not covered by your warranty.

- Interior

  You should clean the appliance interior regularly. It will be easiest to clean when the food supply is low. Wash the interior with a soft cloth and use an unscented mild soap with lukewarm water. Thoroughly dry all surfaces and removable parts. Avoid getting water on appliance controls. If you have taken out any removable parts, replace them and switch the power on before re-stocking the appliance with food. Naturally, you should keep the interior of your appliance hygienic by promptly and thoroughly wiping up any food spills.

  Do not use a steam cleaner. If live components come into contact with condensing steam, they may short-circuit or cause an electric shock.

- Door seals

  Take care to keep door seals clean. Sticky food and drink can cause seals to stick to the cabinet and tear when you open the door. Wash seal with a mild detergent and warm water. Rinse thoroughly and dry.

CAUTION

Never use hot water, solvents, commercial kitchen cleaners, aerosol cleaners, metal polishes, caustic or abrasive cleaners, or scourers to clean this appliance, as they will damage it. Many commercially available cleaning products and detergents contain solvents that will damage your refrigerator. When cleaning, use only a soft cloth with an unscented mild soap and lukewarm water.

FOOD STORAGE TIPS

Storing food

Refrigeration reduces the rate of food spoilage. To maximise the shelf life of perishable food products, ensure that the food is of the freshest possible quality. The following is a general guide to help promote longer food storage.

Fruit and vegetables



To minimise moisture loss, fruit and vegetables should be loosely enclosed in a plastic material (e.g. wrap, bags) and placed in the Vegetable crisper or the Chilled compartment. Those fruits and vegetables with thick skins do not require wrapping.

Dairy products and eggs

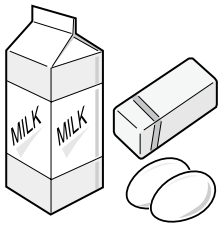

- Most dairy products have a use by date on the outer packaging which indicates the recommended temperature and expected life of the product.
- Eggs should be stored in the egg tray.

Meat, fish and poultry

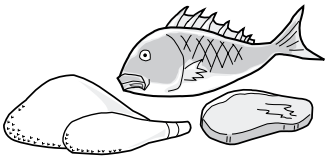

- Place on a plate or dish and cover with paper or plastic wrap.
- For larger cuts of meat, fish or poultry, place to the rear of the shelves.
- Ensure all cooked food is wrapped securely or placed in an airtight container.

NOTES: Evenly place the food on the shelves to allow the cooling air to circulate efficiently.

Hot foods should be cooled before storing. Storing hot foods increases the temperature in the unit and increases the risk of food spoilage.

Do not block the outlet and inlet of the cool air circulating circuit with foods or containers; otherwise the foods will not be evenly cooled throughout the refrigerator.

Do not place food directly in front of the cold air outlet. This may lead to the food freezing.

TROUBLESHOOTING

If you think something may be wrong with your refrigerator, you can carry out some easy checks before calling for service. You may locate the problem, sparing yourself from inconvenience, saving time and money.

PROBLEM	SOLUTION
Refrigerator is not operating	• Check that the power cord is plugged into the power outlet properly and that the outlet is switched 'ON'.
	• Try running another appliance from the power outlet. If no power is coming from the outlet you may have blown a fuse or tripped a circuit of your household power supply.
	• Try adjusting the temperature control to a slightly "colder" position.
	• It is normal for the freezer fan NOT to operate during the automatic defrost cycle, or for a short time after the appliance is switched on.
When there is refrigerator noise	Modern refrigerators with increased storage capacity use high speed compressors. These can provide a seemingly high level of sound which is quite normal. Normal operational sounds include: • Occasional gurgling, similar to water boiling. • Air flow noise (air circulates because of a small fan). • A popping noise heard during automatic defrost. • A clicking noise heard just before the compressor starts (this is just the automatic switching action of the temperature control, turning the compressor on or off). Other strange sounds may mean that you need to check and take action. For example, noises may mean that: • The cabinet is not level. • The floor is uneven or weak. • Bottles are badly placed and rattling. • There are vibrations from an object on top of or behind or beside the refrigerator. • The back of the refrigerator cabinet is touching the wall. Remember it is quite normal for noise to seem louder when the refrigerator starts operating, or during quieter periods such as night time.
If there are odours inside the refrigerator	• The interior may need cleaning.
	• Some foods produce odours.
	• Some containers and wrapping can cause odours.
	• Ask yourself if the odour started about the same time you started storing something unusual.
When the motor seems to run more than expected	Your new refrigerator has a large fridge and freezer section to keep cool. So it is normal to frequently hear the sound of the motor. However, to keep operation to a minimum check the following: • Are doors kept open too long or too often? • Are controls set too cold? See 'Controlling the temperature' on pages 11. • Have large amounts of warm food just recently been stored? Summer, festive seasons and holidays usually mean a lot more work for your refrigerator. • If the day is hot or the room is very warm, the refrigerator will need to run more than normal. • The refrigerator will run more that normal just after you install it or when it has been turned off for a long time.

TROUBLESHOOTING

If the temperature in the refrigerator is too warm	• Check that the appliance has enough clearance at the sides, back and top. Refer to the installation instructions on page 7.
	• Refer to 'Controlling the temperature' on pages 11.
	• You may have kept the door open too long or too frequently.
	• Food containers or packaging may be holding a door open.
If the temperature in the refrigerator is too cold	• Refer to 'Controlling the temperature' on page 11.
	• Increase the temperature to avoid high energy consumption.
If water drips on the floor	The defrost water tray, (located at the back or underneath of the cabinet) may not be properly positioned, or the drain tube may not be properly positioned to direct water into this tray. You may need to pull the refrigerator away from the wall to check the tray and tube.
If the doors will not close	• Check whether the top of the refrigerator is tilted back 10-15mm to allow the doors to self close.
	• Check whether something is holding the door open.
	It is normal for the french doors to momentarily open and re-close when the food storage compartment door is closed. If the french doors stay open, the refrigerator needs to be tilted backwards a little further. If you call a service person to solve this problem you will be charged for the cost of the service call, this is not a warranty fault.
	Check bins are positioned correctly on slides after cleaning.
When temperature is hot/ warm on the outside and rear side of the refrigerator	In normal operation, the refrigerator transfers heat from inside to outside of the cabinet. It is normal for the side and rear of the refrigerator to feel warm/hot while operating. This will be more noticeable during start up and hot ambient conditions.

If you still require service

If you have a problem, and the problem persists after you have made the checks mentioned above, contact your nearest Electrolux approved Service Centre or the dealer you bought the refrigerator from. Be ready to quote the model number, 9-digit PNC and 8-digit serial number, which is stated on the label inside the refrigerator compartment.

NOTES

NOTES

Electrolux Warranty

FOR SALES IN AUSTRALIA AND NEW ZEALAND
APPLIANCE: REFRIGERATION

This document sets out the terms and conditions of the product warranties for Electrolux Appliances. It is an important document. Please keep it with your proof of purchase documents in a safe place for future reference should you require service for your Appliance.

1. In this warranty:
   (a) 'acceptable quality' as referred to in clause 10 of this warranty has the same meaning referred to in the ACL;
   (b) 'ACL' means Schedule 2 to the Competition and Consumer Act 2010;
   (c) 'Appliance' means any Electrolux product purchased by you and accompanied by this document;
   (d) 'ASC' means Electrolux authorised service centres;
   (e) 'Electrolux' means Electrolux Home Products Pty Ltd of 163 O'Riordan Street, Mascot NSW 2020, ABN 51 004 762 341 in respect of Appliances purchased in Australia and Electrolux (NZ) Limited (collectively 'Electrolux') of 3-5 Niall Burgess Road, Mount Wellington, in respect of Appliances purchased in New Zealand;
   (f) 'major failure' as referred to in clause 10 of this warranty has the same meaning referred to in the ACL and includes a situation when an Appliance cannot be repaired or it is uneconomic for Electrolux, at its discretion, to repair an Appliance during the Warranty Period;
   (g) 'Warranty Period' means the Appliance is warranted against manufacturing defects in Australia and New Zealand for 24 months and for the Appliance's compressor, condenser, evaporator and drier, an additional 36 months parts only warranty applies, following the date of original purchase of the Appliance;
   (h) 'you' means the purchaser of the Appliance not having purchased the Appliance for re-sale, and 'your' has a corresponding meaning.
2. This warranty only applies to Appliances purchased and used in Australia or New Zealand and used in normal domestic applications and is in addition to (and does not exclude, restrict, or modify in any way) any non-excludable statutory warranties in Australia or New Zealand.
3. During the Warranty Period Electrolux or its ASC will, at no extra charge if your Appliance is readily accessible for service, without special equipment and subject to these terms and conditions, repair or replace any parts which it considers to be defective. Electrolux or its ASC may use remanufactured parts to repair your Appliance. You agree that any replaced Appliances or parts become the property of Electrolux. This warranty does not apply to light globes, batteries, filters or similar perishable parts.
4. Parts and Appliances not supplied by Electrolux are not covered by this warranty.
5. To the extent permitted by law, you will bear the cost of transportation, travel and delivery of the Appliance to and from Electrolux or its ASC. If you reside outside of the service area, you will bear the cost of:
   (a) travel of an authorised representative;
   (b) transportation and delivery of the Appliance to and from Electrolux or its ASC.

   In all instances, unless the Appliance is transported by Electrolux or an Electrolux authorised representative, the Appliance is transported at the owner's cost and risk while in transit to and from Electrolux or its ASC.
6. Proof of purchase is required before you can make a claim under this warranty.
7. You may not make a claim under this warranty unless the defect claimed is due to faulty or defective parts or workmanship. Electrolux is not liable in the following situations (which are not exhaustive):
   (a) the Appliance is damaged by:
      (i) accident
      (ii) misuse or abuse, including failure to properly maintain or service
      (iii) normal wear and tear
      (iv) power surges, electrical storm damage or incorrect power supply
      (v) incomplete or improper installation
      (vi) incorrect, improper or inappropriate operation
      (vii) insect or vermin infestation
      (viii) failure to comply with any additional instructions supplied with the Appliance;
   (b) the Appliance is modified without authority from Electrolux in writing;
   (c) the Appliance's serial number or warranty seal has been removed or defaced;
   (d) the Appliance was serviced or repaired by anyone other than Electrolux, an authorised repairer or ASC.
8. This warranty, the contract to which it relates and the relationship between you and Electrolux are governed by the law applicable where the Appliance was purchased. Where the Appliance was purchased in New Zealand for commercial purposes the Consumer Guarantee Act does not apply.
9. To the extent permitted by law and subject to your non-excludable statutory rights and warranties, Electrolux excludes all warranties and liabilities (other than as contained in this document) including liability for any loss or damage whether direct or indirect arising from your purchase, use or non use of the Appliance.
10. For Appliances and services provided by Electrolux in Australia, the Appliances come with a guarantee by Electrolux that cannot be excluded under the ACL. You are entitled to a replacement or refund for a major failure and for compensation for any other reasonably foreseeable loss or damage. You are also entitled to have the Appliance repaired or replaced if the Appliance fails to be of acceptable quality and the failure does not amount to a major failure.
    The benefits to you given by this warranty are in addition to your other rights and remedies under a law in relation to the Appliances or services to which the warranty relates.
11. At all times during the Warranty Period, Electrolux shall, at its discretion, determine whether repair, replacement or refund will apply if an Appliance has a valid warranty claim applicable to it.
12. For Appliances and services provided by Electrolux in New Zealand, the Appliances come with a guarantee by Electrolux pursuant to the provisions of the Consumer Guarantees Act, the Sale of Goods Act and the Fair Trading Act.
13. To enquire about claiming under this warranty, please follow these steps:
    (a) carefully check the operating instructions, user manual and the terms of this warranty;
    (b) have the model and serial number of the Appliance available;
    (c) have the proof of purchase (e.g. an invoice) available;
    (d) telephone the numbers shown below.
14. You accept that if you make a warranty claim, Electrolux and its ASC may exchange information in relation to you to enable Electrolux to meet its obligations under this warranty.

Important Notice

Before calling for service, please ensure that the steps listed in clause 13 above have been followed.

FOR SERVICE or to find the address of your nearest state service centre in Australia **PLEASE CALL 13 13 49** For the cost of a local call (Australia only)	**SERVICE AUSTRALIA** Electrolux ELECTROLUX HOME PRODUCTS electrolux.com.au	**FOR SPARE PARTS** or to find the address of your nearest state spare parts centre in Australia **PLEASE CALL 13 13 50** For the cost of a local call (Australia only)
FOR SERVICE or to find the address of your nearest authorised service centre in New Zealand **FREE CALL 0800 10 66 10** (New Zealand only)	**SERVICE NEW ZEALAND** Electrolux ELECTROLUX (NZ) Limited electrolux.co.nz	**FOR SPARE PARTS** or to find the address of your nearest state spare parts centre in New Zealand **FREE CALL 0800 10 66 20** (New Zealand only)

GFR_Warr_Aug13

For more information on all Westinghouse appliances, or for dimension and installation information, call into your retailer, phone or email our customer care team or visit our website:

AUSTRALIA
phone: 1300 363 640
fax: 1800 350 067
email: customercare@electrolux.com.au
web: westinghouse.com.au

NEW ZEALAND
phone: 0800 436 245
fax: 0800 225 088
email: customercare@electrolux.co.nz
web: westinghouse.co.nz



TOP SERVICE
Top Service encompasses the after sales service provided by The Electrolux Group to consumers including delivery, home service and spare parts.

Westinghouse. We are part of the Electrolux family.
Share more of our thinking at electrolux.com.au

Ⓦ and WESTINGHOUSE are trademarks of Westinghouse Electric Corporation. Used under license. All Rights Reserved.

© 2015 Electrolux Home Products Pty Ltd.

ABN 51 004 762 341
WMAN_AFRI_AUG15