# FROST FREE COMBI REFRIGERATOR

## Fridge - Freezer

Instruction Booklet

# TF55178

# Index


**BEFORE USING THE APPLIANCE ..... 3**
- General warnings ..... 3
- Old and out-of-order fridges or freezers ..... 5
- Safety warnings ..... 5
- Installing and operating your fridge freezer ..... 6
- Before Using your fridge freezer ..... 7
- Information on the Frost Free Technology ..... 8

**USER INFORMATION ..... 9**
- Thermostat setting ..... 9
- Warnings about temperature adjustments ..... 9
- Accessories ..... 10
  - Ice tray ..... 10
  - Bottle holder ..... 10

**FOOD PLACEMENT ..... 11**
- Cooling compartment ..... 11
- The deep freeze compartment ..... 11

**CLEANING AND MAINTENANCE ..... 16**
- Defrosting ..... 17
- Replacing the light bulb ..... 17

**TRANSPORTATION AND CHANGING OF ..... 18**

**INSTALLATION POSITION ..... 18**
- Transportation and changing of installation position ..... 18
- Repositioning the door ..... 18

**BEFORE CALLING FOR AFTER SALES SERVICE ..... 18**
- Tips For Saving Energy ..... 20

**THE PARTS OF THE APPLIANCE AND THE COMPARTMENTS ..... 21**

## PART 1. BEFORE USING THE APPLIANCE

## General warnings

**WARNING:** Keep ventilation openings, in the appliance enclosure or in the built-in structure, clear of obstruction.

**WARNING:** Do not use mechanical devices or other means to accelerate the defrosting process, other than those recommended by the manufacturer.

**WARNING:** Do not use electrical appliances inside the food storage compartments of the appliance, unless they are of the type recommended by the manufacturer.

**WARNING:** Do not damage the refrigerant circuit.

**WARNING:** To avoid a hazard due to the instability of the appliance, it must be fixed in accordance with the instructions.

- If your appliance uses R600a as a refrigerant (this information will be provided on the label of the cooler) you should take care during transportation and installation to prevent the cooler elements from being damaged. R600a is an environmentally friendly and natural gas, but it is explosive. In the event of a leak due to damage of the cooler elements, move your fridge away from open flames or heat sources and ventilate the room where the appliance is located for a few minutes.
- While carrying and positioning the fridge, do not damage the cooler gas circuit.
- Do not store explosive substances such as aerosol cans with a flammable propellant in this appliance.
- This appliance is intended to be used in household and domestic applications.

- If the socket does not match the refrigerator plug, it must be replaced by the manufacturer, a service agent or similarly qualified persons in order to avoid a hazard.
- A specially grounded plug has been connected to the power cable of your refrigerator. This plug should be used with a specially grounded socket of 1 amperes. If there is no such socket in your house, please have one installed by an authorised electrician.
- This appliance can be used by children aged from 8 years and above and persons with reduced physical, sensory or mental capabilities or lack of experience and knowledge if they have been given supervision or instruction concerning use of the appliance in a safe way and understand the hazards involved. Children shall not play with the appliance. Cleaning and user maintenance shall not be made by children without supervision.
- If the supply cord is damaged, it must be replaced by the manufacturer, an authorised service agent or similar qualified persons, in order to avoid a hazard.
- This appliance is not intended for use at altitudes exceeding 2000 m.

## Old and out-of-order fridges or freezers

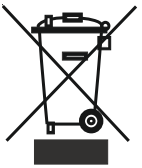

- If your old fridge has a lock, break or remove the lock before discarding it, because children may get trapped inside it and may cause an accident.
- Old fridges and freezers may contain isolation material and refrigerant with CFC or HFC. Therefore, take care not to harm environment when you are discarding your old fridges.

  Please ask your municipal authority about the disposal of the WEEE reuse, recycle and recovery purposes.

**Notes:**

- Please read the instruction manual carefully before installing and using your appliance. ***We are not responsible for the damage occurred due to misuse.***
- Follow all instructions on your appliance and instruction manual, and keep this manual in a safe place to resolve the problems that may occur in the future.
- This appliance is produced to be used in homes and it can only be used in domestic environments and for the specified purposes. It is not suitable for commercial or common use. Such use will cause the guarantee of the appliance to be cancelled and our company will not be responsible for losses incurred.
- This appliance is produced to be used in houses and it is only suitable for cooling / storing food. It is not suitable for commercial or common use and/or for storing substances except for food. Our company is not responsible for losses to be incurred in the contrary case.

## Safety warnings

- Do not connect your Fridge Freezer to the mains electricity supply using an extension lead.
- Do not plug in damaged, torn or old plugs.
- Do not pull, bend or damage the cord.





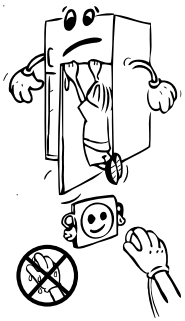

- This appliance is designed for use by adults, do not allow hildren to play with the appliance or let them hang off the door.
- Never touch the power cord/plug with wet hands as this could cause a short circuit or electric shock.
- Do not use any metal or sharp objects to accelerate the defrosting process.
- Do not place glass bottles or beverage cans in the ice-making compartment as they can burst as the contents freeze.
- Do not place explosive or flammable material in your fridge. Place drinks with high alcohol content vertically in the fridge compartment and make sure that their tops are tightly closed.





- When removing ice from the ice-making compartment, do not touch it. Ice may cause frost burns and/or cuts.
- Do not touch frozen goods with wet hands. Do not eat ice-cream or ice cubes immediately after you have taken them out of the ice-making compartment.
- Do not re-freeze frozen goods after they have melted. This may cause health issues such as food poisoning.
- Do not cover the body or top of fridge with lace. This affects the performance of your fridge.
- Secure any accessories in the fridge during transportation to prevent damage to the accessories.

## Installing and operating your fridge freezer

*Before using your fridge freezer, you should pay attention to the following points:*

- The operating voltage for your fridge freezer is 220-240 V at 50Hz.
- We do not accept responsibility for any damages that occur due to ungrounded usage.
- Place your fridge freezer where it will not be exposed to direct sunlight.
- Your appliance should be at least 50 cm away from stoves, gas ovens and heater cores, and at least 5 cm away from electrical ovens.
- Your fridge freezer should never be used outdoors or exposed to rain.
- our fridge free er is not suitable for use in an out house, shed, garage or room in which the temperature can go below the recommended climate.
- When your fridge freezer is placed next to a deep freezer, there should be at least 2 cm between them to prevent humidity forming on the outer surface.
- Do not place anything on your fridge freezer, and install your fridge freezer in a suitable place so that at least 15 cm of free space is available above it.




- Do not place heavy items on the appliance.
- Use the adjustable front legs to make sure your appliance is level and stable. You can adjust the legs by turning them in either direction. This should be done before placing food in the fridge freezer.
- Before using your fridge freezer, wipe all parts with a solution of warm water and a teaspoon of sodium bicarbonate, then rinse with clean water and dry.
  Place all parts in the fridge after cleaning.
- Install the plastic distance guide (the part with black vanes at the rear) by turning it 90° (as shown in the figure) to prevent the condenser from touching the wall.

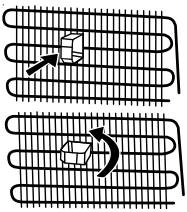

## Before Using your fridge freezer

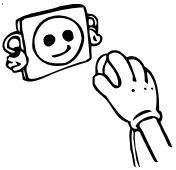

- When using your fridge for the first time, or after transportation, keep it in an upright position for at least 3 hours before plugging into the mains. This allows efficient operation and prevents damage to the compressor.
- Your fridge may have a smell when it is operated for the first time. This is normal and the smell will fade away when your fridge starts to cool.

## Information on the Frost Free Technology

The Frost Free refrigerators are different from the other static refrigerators in terms of their operational system.

In normal fridges, the humidity entering the fridge due to opening the door and the humidity inherent in the food causes freezing in the freezer department. To defrost the frost and ice in the freezer compartment, you are periodically required to turn off the fridge, place the food that needs to be kept frozen in a separately cooled container and remove the ice gathered in the freezer department.

The situation is completely different in no-frost fridges. Dry and cold air is blown into the fridge and freezer compartments homogeneously and evenly from several points via a blower fan. Cold air dispersed homogeneously and evenly between the shelves cools all of your food equally and uniformly, thus preventing humidity and freezing.

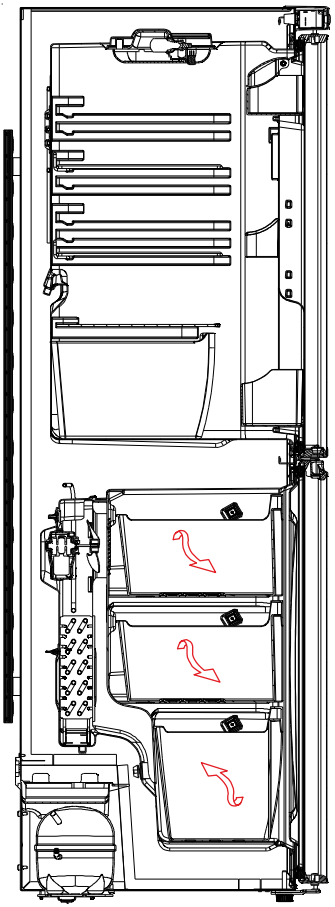

# PART 2. USER INFORMATION

## Thermostat setting

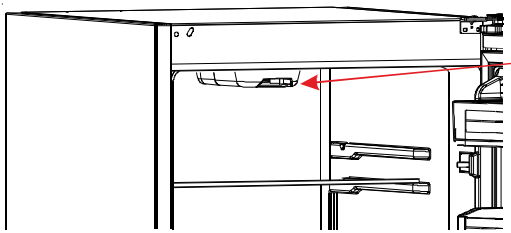


The fridge freezer thermostat automatically regulates the inside temperature of the compartments. By rotating the knob from position 1 to 5, colder temperatures can be obtained.

**Thermostat setting;**

To reduce the temperature inside of the appliance, turn the thermostat towards 5 maximum.

To increase the temperature inside of the appliance, turn the thermostat towards 1 minimum.

Depending on the ambient temperature of the room the appliance is in, you will need to adjust the thermostat accordingly.

In summer months the thermostat may need to be set at a lower temperature.

## Warnings about temperature adjustments

- Temperature adjustments should be made according to the frequency of door openings and the quantity of food kept inside the fridge freezer.
- When you first switch on the appliance, you should ideally try to run it without any food in for 24 hours and not open the door. If you need to use it straight away, try not to put a large quantity of food inside.
- A 5 minute delay function is included to prevent damage to the compressor of your fridge freezer, when you unplug it and then plug it in again to operate it, or when an energy breakdown occurs. Your fridge freezer will start to operate normally after 5 minutes.

- Your fridge freezer is designed to operate in the ambient temperature intervals stated in the standards, according to the climate class stated in the information label. It is not recommended that your fridge freezer is operated in the environments which are out of the stated temperature intervals. This will reduce the cooling efficiency of the fridge free er.

- This appliance is designed for use at an ambient temperature within the 16°C - 32°C range.

| Climate Class | Ambient Temperature (°C) |
|---|---|
| **T** | Between 16 and 43 (°C) |
| **ST** | Between 16 and 38 (°C) |
| **N** | Between 16 and 32 (°C) |
| **SN** | Between 10 and 32 (°C) |

## Accessories

***Ice tray***

- Fill the ice tray with water and place in the freezer compartment.
- After the water has completely turned into ice, you can twist the tray as shown below to remove the ice cubes.

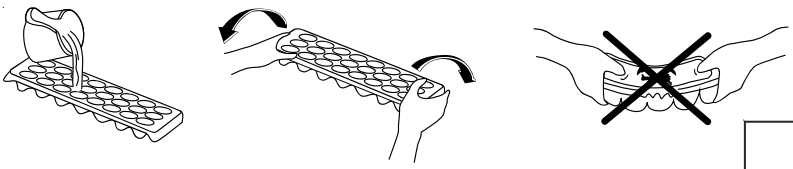

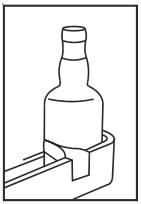

***Bottle holder*** ***(Only some models)***

In order to prevent bottles from slipping or falling over, you can use the bottle holder. This will also help to prevent the noise made by bottles when opening or closing the door.

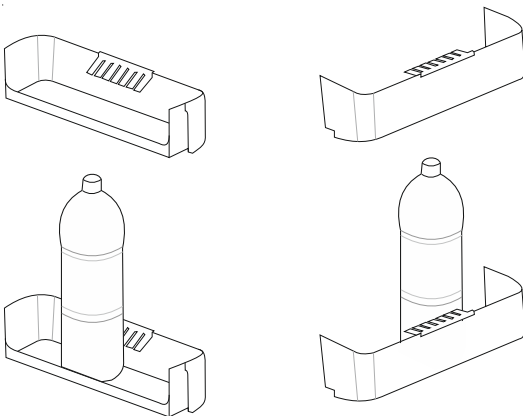

***All written and visual descriptions in the accessories may vary according to the appliance model.***

# PART 3. FOOD PLACEMENT

## Cooling compartment

- The refrigerator compartment is used for storing fresh food for a few days.
- Do not place food in direct contact with the rear wall of the refrigerator compartment. Leave some space around food to allow the circulation of air.
- Do not place hot food or evaporating liquid in the refrigerator.
- Always store food wrapped, or in closed containers.
- To reduce humidity and avoid formation of frost, never place liquids in unsealed containers in the refrigerator.
- We recommend meat is loosely wrapped and placed on the glass shelf just above the vegetable bin, where the air is colder.
- Store fruit and vegetable items loose in the crisper containers.
- To avoid cold air escaping, try not to open the door too often, and do not leave the door open for a long time.

**NOTE:** Potatoes, onions and garlic should not be stored in the refrigerator. Meat should never be frozen after it has thawed (if it has not been cooked).

***Some recommendations have been specified below for the placement and storage of your food in the cooling compartment.***

| Food | Maximum Storing time | Where to place in the fridge department |
|---|---|---|
| **Vegetables and fruits** | 1 week | Vegetable bin |
| **Meat and fish** | 2 - 3 Days | Wrapped in plastic foil or bags or in a meat container (on the glass shelf) |
| **Fresh cheese** | 3 - 4 Days | In the special door shelf |
| **Butter and margarine** | 1 week | In the special door shelf |
| **Bottled products milk and yoghurt** | Until the expiry date recommended by the producer | In the special door shelf |
| **Eggs** | 1 month | In the egg shelf |
| **Cooked food** | | All shelves |

## The deep freeze compartment

- Use the deep freeze compartment of your refrigerator for storing frozen food for a long time and producing ice.
- Place the food you would like to freeze initially in the upper basket of the freezer. Please do not place food near the already frozen food. You may place your food next to the other frozen food once it has frozen (for at least 24 hours).

- You should freeze your food (meat, minced meat, fish, etc.) by dividing them into portions in such a way that they can be consumed in portions.
- Please do not refreeze frozen food once it is thawed. It may pose a danger for your health.
- Do not place hot meals in your deep freeze before they are cold.
- When buying frozen food ensure that it has been frozen at a suitable temperature and that the packing is intact.
- When storing frozen food; the instructions shown on frozen food packaging should always be followed carefully and if no information is provided, food should not be stored for more than 3 months from the purchase date.
- Frozen food should be transported in appropriate containers and placed in the freezer as soon as possible. Do not use door shelves for freezing.
- The storage duration of frozen food changes depending on the environment temperature, the frequent opening and closing of the doors, thermostat settings, food type and the length of period that has elapsed from the time the food was bought to the time it entered the freezer. Always follow the instructions on the packaging and never exceed the storage duration.
- During long lasting power cuts, do not open any compartment for 1 hours. Your fridge free er. will preserve your frozen food in the environmental condition of 25°C for about 12 hours. This value falls in high environmental temperatures. During longer lasting power cuts, do not refreeze your food, and consume it as soon as possible.

Some recommendations have been specified on pages 13, 14 and 15 for the placement and storage of your food in the deep freeze compartment.

| Meat and fish | Preparation | Maximum Storing time (month) |
|---|---|---|
| **Steak** | Wrapping in a foil | 6 - 8 |
| **Lamb meat** | Wrapping in a foil | 6 - 8 |
| **Veal roast** | Wrapping in a foil | 6 - 8 |
| **Veal cubes** | In small pieces | 6 - 8 |
| **Lamb cubes** | In pieces | 4 - 8 |
| **Minced meat** | In packages without using spices | 1 - 3 |
| **Giblets (pieces)** | In pieces | 1 - 3 |
| **Bologna sausage/salami** | Should be packaged even if it has membrane | |
| **Chicken and turkey** | Wrapping in a foil | 4 - 6 |
| **Goose and Duck** | Wrapping in a foil | 4 - 6 |
| **Deer, Rabbit, Wild Boar** | In 2.5 kg portions and as fillets | 6 - 8 |
| **Fresshwater fishes (Salmon, Carp, Crane, Siluroidea)** | After cleaning the bowels and scales of the fish, wash and dry it; and if necessary, cut off the tail and head. | 2 |
| **Lean fish; bass, turbot, flounder** | | 4 |
| **Fatty fishes (Tunny, Mackarel, bluefish, anchovy)** | | 2 - 4 |
| **Shellfish** | Cleaned and in bags | 4 - 6 |
| **Caviar** | In its package, aluminium or plastic container | 2 - 3 |
| **Snails** | In salty water, aluminum or plastic container | 3 |

**Note:** *Frozen meat should be cooked as fresh meat after being thawed. If the meat is not cooked after being thawed, it must not be re-frozen.*

| Vegetables and Fruits | Preparation | Maximum Storing time (months) |
|---|---|---|
| **String beans and beans** | Wash and cut into small pieces and boil in water | 10 - 13 |
| **Beans** | Hull and wash and boil in water | 12 |
| **Cabbage** | Cleaned and boil in water | 6 - 8 |
| **Carrot** | Clean and cut to slices and boil in water | 12 |
| **Pepper** | Cut the stem, cut into two pieces, remove the core and boil in water | 8 - 10 |
| **Spinach** | Washed and boil in water | 6 - 9 |
| **Cauliflower** | Take the leaves apart, cut the heart into pieces, and leave it in water with a little lemon juice for a while | 10 - 12 |
| **Eggplant** | Cut to pieces of 2cm after washing | 10 - 12 |
| **Corn** | Clean and pack with its stem or as sweet corn | 12 |
| **Apple and pear** | Peel and slice | 8 - 10 |
| **Apricot and Peach** | Cut into two pieces and remove the stone | 4 - 6 |
| **Strawberry and Blackberry** | Wash and hull | 8 - 12 |
| **Cooked fruits** | Adding 10 % of sugar in the container | 12 |
| **Plum, cherry, sourberry** | Wash and hull the stems | 8 - 12 |

| Dairy Products | Preparation | Maximum Storing time (months) | Storing Conditions |
|---|---|---|---|
| **Packet (Homogenize) Milk** | In its own packet | 2-3 | Pure Milk – In its own packet |
| **Cheese-excluding white cheese** | In slices | 6-8 | Original package may be used for short storing period. It should be wrapped in foil for longer periods. |
| **Butter, margarine** | In its package | 6 | |

** It should not be frozen with its shells. The white and yolk of the egg should be frozen separately or as having been well mixed.*

## PART 4. CLEANING AND MAINTENANCE

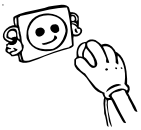

- **Disconnect the unit from the power supply before cleaning.**

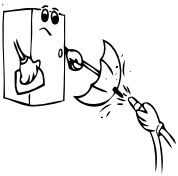

- Do not clean the appliance by pouring water.
- Make sure that no water enters the lamp housing and other electrical components.

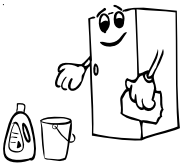

- The fridge freezer should be cleaned periodically using a solution of bicarbonate of soda and lukewarm water.

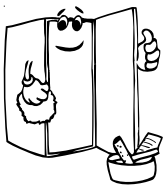

- Clean the accessories separately with soap and water. Do not clean them in the dishwasher.



- Do not use abrasive products, detergents or soaps. After washing, rinse with clean water and dry carefully. When you have finished cleaning, reconnect the plugto the mains supply with dry hands.

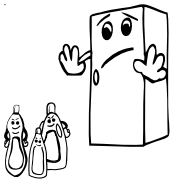

- Clean the condenser with a broom at least twice a year. This will help you to save on energy costs and increase productivity.

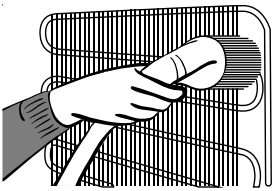

**THE POWER SUPPLY MUST BE DISCONNECTED.**

## Defrosting

Your refrigerator has fully automatic defrosting. The water formed as a result of defrosting passes through the water collection spout, flows into the vaporisation container below the condenser and evaporates there.

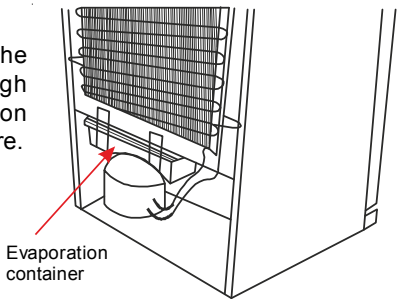


## Replacing the light bulb

To replace the bulb in the fridge compartments;

Unplug your fridge.

Using a screwdriver, carefully remove the light cover from the top panel. (A) se the screwdri er to unhoo the catch which affix the light co er into place.

Replace with a 15 watt bulb. (B)

Reinstall the light cover. (A)

Wait for 5 minutes before re-plugging the fridge in and restore the thermostat to its original position.

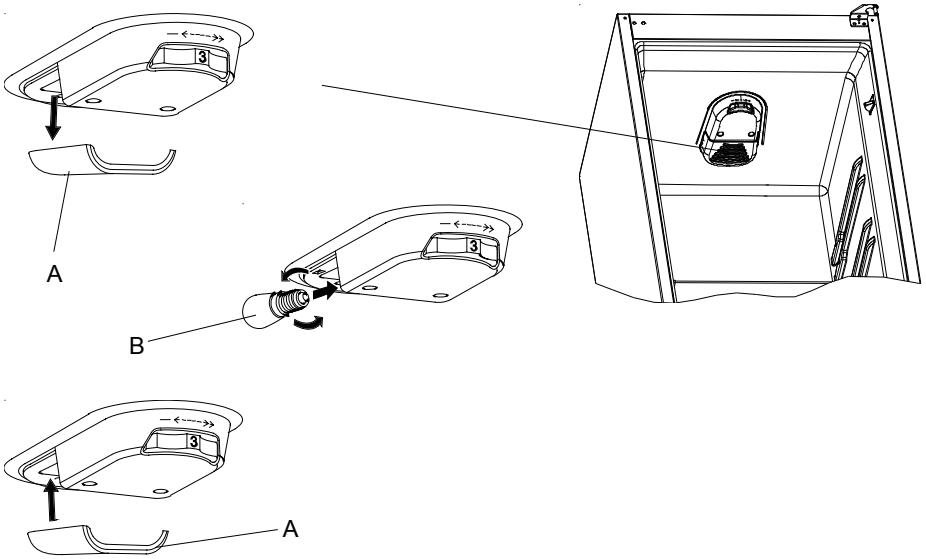


### Replacing LED lighting

If your refrigerator has LED lighting contact the help desk as this should be changed by authorized personnel only.

## PART- 5. TRANSPORTATION AND CHANGING OF INSTALLATION POSITION

### Transportation and changing of installation position

- The original packages and foamed polystyrene (PS) can be retained if required.
- During transportation, the appliance should be secured with a wide string or a strong rope. The instructions written on the corrugated box must be followed while transporting.
- Before transporting or changing the installation position, all the moving objects (ie,shelves,crisper…) should be taken out or fixed with bands in order to prevent them from getting damaged.

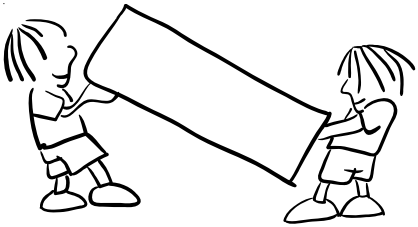

***Carry your fridge freezer in the upright position.***

### Repositioning the door

- It is possible to change the opening direction of the door. Please refer to Part 8 for detailed instructions.
- If the door opening direction of your refrigerator may be changed, you should contact the nearest authorised service agent to have the opening direction changed.

## PART 6. BEFORE CALLING FOR AFTER SALES SERVICE

If your fridge freezer is not working properly, it may be a minor problem, therefore to save time and money, check the following, before calling a er ice ngineer.

**What to do if your appliance does not operate**
**Check that:**

- There is no power,
- The general switch in your home is disconnected,
- The socket is not faulty. To check this, plug the appliance in to another socket which you know is working.

**What to do if your appliance performs poorly**
**Check that:**

- You have overloaded the appliance,
- The thermostat setting is on position “1” (if so set the thermostat dial to a suitable value).
- The doors are closed properly,
- There is no dust on the condenser,
- There is enough space at the rear and side walls.

**If your fridge is operating too loudly**

**Normal Noises**

**Cracking (Ice cracking) Noise:**

- During automatic defrosting.
- When the appliance is cooled or warmed (due to expansion of appliance material).
- Heard when the thermostat switches the compressor on/off.

**Compressor noise**

- Normal motor noise. This noise means that the compressor operates normally
- Compressor may cause more noise for a short time when it starts.

**Bubbling noise and splash:**

- This noise is caused by the flow of the refrigerant in the tubes of the system.

**Water flow noise:**

- Normal flow noise of water flowing to the evaporation container during defrosting. This noise can be heard during defrosting.

**Air Blow Noise:**

- Normal fan noise. This noise can be heard in No-Frost fridges during normal operation of the system due to the circulation of air.
- If you hear any other sounds, check that:
  - The appliance is level
  - Nothing is touching the rear of the appliance
  - Items on the appliance are vibrating.

**If there is water in the lower part of the refrigerator,**
**Check that:**

- The drain hole for the water is not clogged (use the defrost drain plug to clean the drain hole).

**Recommendations**

- If you do not intend to use the appliance for long time (for example during the summer holidays) unplug and clean the appliance and leave the door open to prevent the formation of mildew and smells.
- To stop the appliance completely, unplug it from the main socket (for cleaning and when the doors are left open).
- If a problem persists after you have followed all the instructions above, please consult the nearest Authorised Service Centre.

## Tips For Saving Energy

1. Install the appliance in a cool, well ventilated room , but not in direct sunlight and not near a heat source (radiator, cooker.. etc). Otherwise use an insulating plate.
2. Allow warm food and drinks to cool down outside the appliance.
3. When thawing frozen food, place it in the refrigerator compartment. The low temperature of the frozen food will help to cool the refrigerator compartment when it is thawing. This will help to save energy. If the frozen food is put out, it results in a waste of energy.
4. Cover drinks or other liquids when placing them in the appliance Otherwise humidity increases in the appliance. Therefore, the working time gets longer. Also covering drinks and other liquids helps to preserve smell and taste.
5. Try to avoid keeping the doors open for long periods or opening the doors too frequently as warm air will enter the cabinet and cause the compressor to switch on unnecessarily often.
6. Keep the covers of the different temperature compartments (crisper, chiller ...etc ) closed
7. Door gasket must be clean and pliable. Replace gaskets if worn.

**PART- 7.**

# THE PARTS OF THE APPLIANCE AND THE COMPARTMENTS

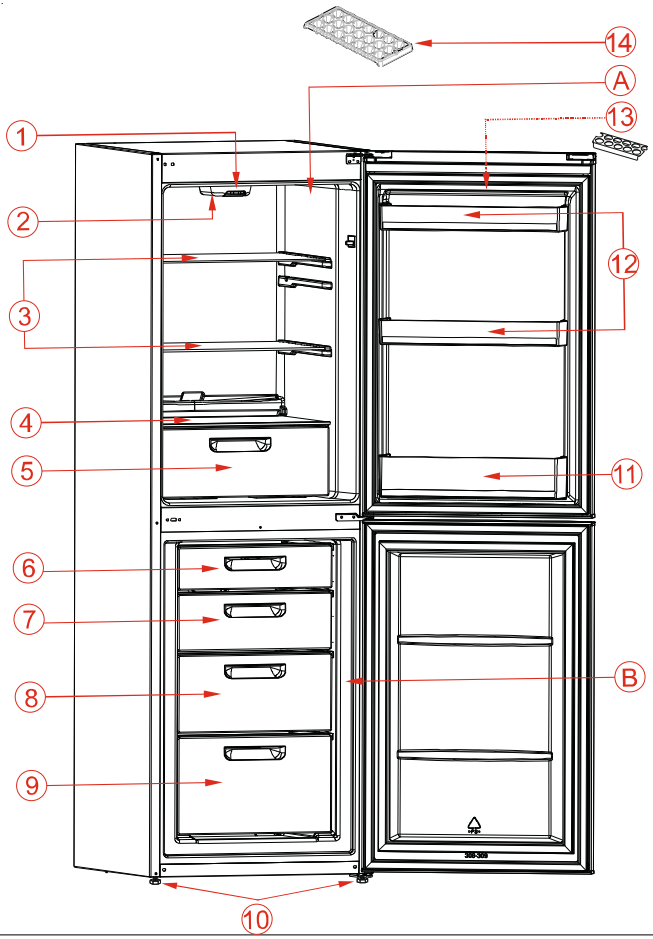


This presentation is only for information about the parts of the appliance. Parts may vary according to the appliance model.

**A)** Fridge compartment
**B)** Freezing compartment

**1)** Thermostat control
**2)** Fridge lamp & cover
**3)** Fridge shelves
**4)** Crisper cover
**5)** Crisper
**6)** Freezer upper flap / drawer
**7)** Freezer lower flap / drawer
**8)** Freezer upper drawer
**9)** Freezer bottom drawer
**10)** Levelling feet
**11)** Bottle shelf
**12)** Door shelves
**13)** Egg holder
**14)** Ice tray

# ELECTRICAL CONNECTION (FOR UK TYPE PLUG)

For your safety please read the following information

**Warning: This appliance must be earthed.**

This appliance operates from 220-240 volts and should be protected by a 13 amp fuse in the plug.

The appliance is supplied with a standard 13 amp 3-pin mains plug fitted with a 13-amp fuse. Should the fuse require replacement, it must be replaced with a fuse rated at 13 amp and approved to BS1362.

If the mains plug which is fitted is unsuitable for the socket outlet in your home or is removed for any other reason, please follow the instructions below on how to wire a 13 amp 3 pin plug..

**How to wire a 13 amp plug.**

Important

The wires in the mains lead on this appliance are coloured in accordance with the following code:

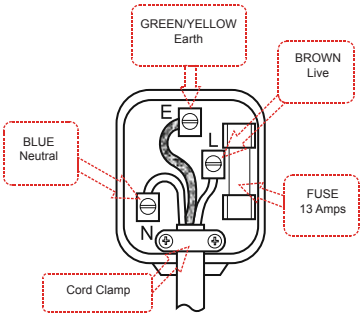


Green and Yellow - Earth

Blue – Neutral

Brown – Live

As the colours may not correspond with the markings identifying the terminals in your plug proceed as follows.

The green and yellow wire must be connected to the terminal in the plug which is marked with the letter E or with the earth symbol ⏚ or coloured green and yellow.

The blue wire must be connected to the terminal marked N.

The brown wire must be connected to the terminal marked L.

You must make sure the lead is firmly secured under the cord clamp.

**PART- 8.**

# DOOR REVERSAL INSTRUCTIONS

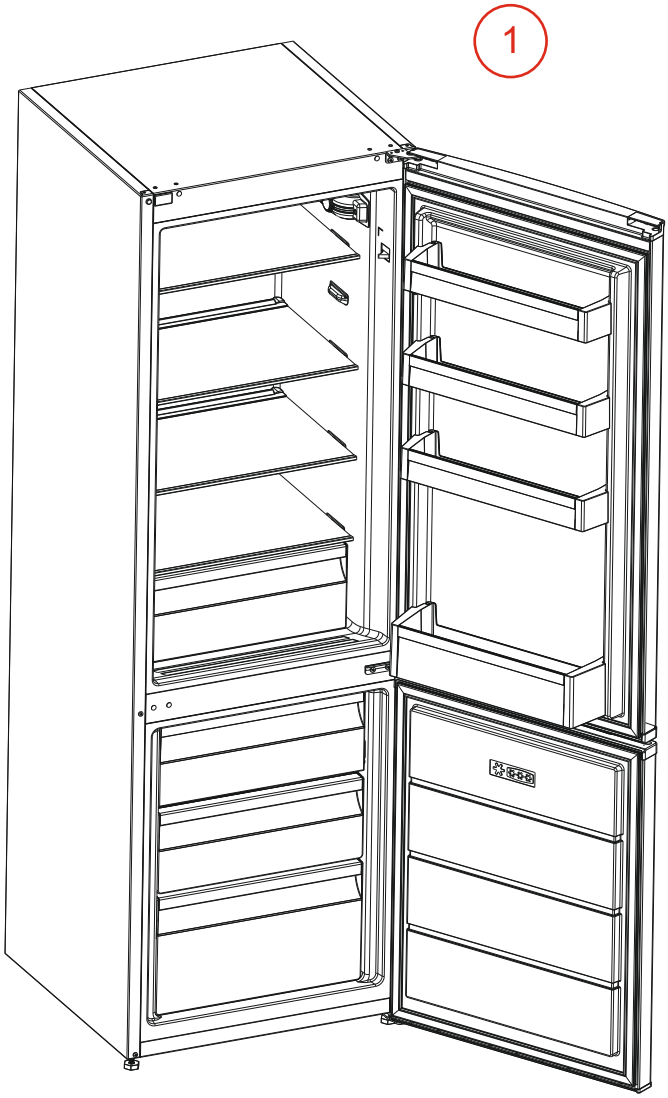

2

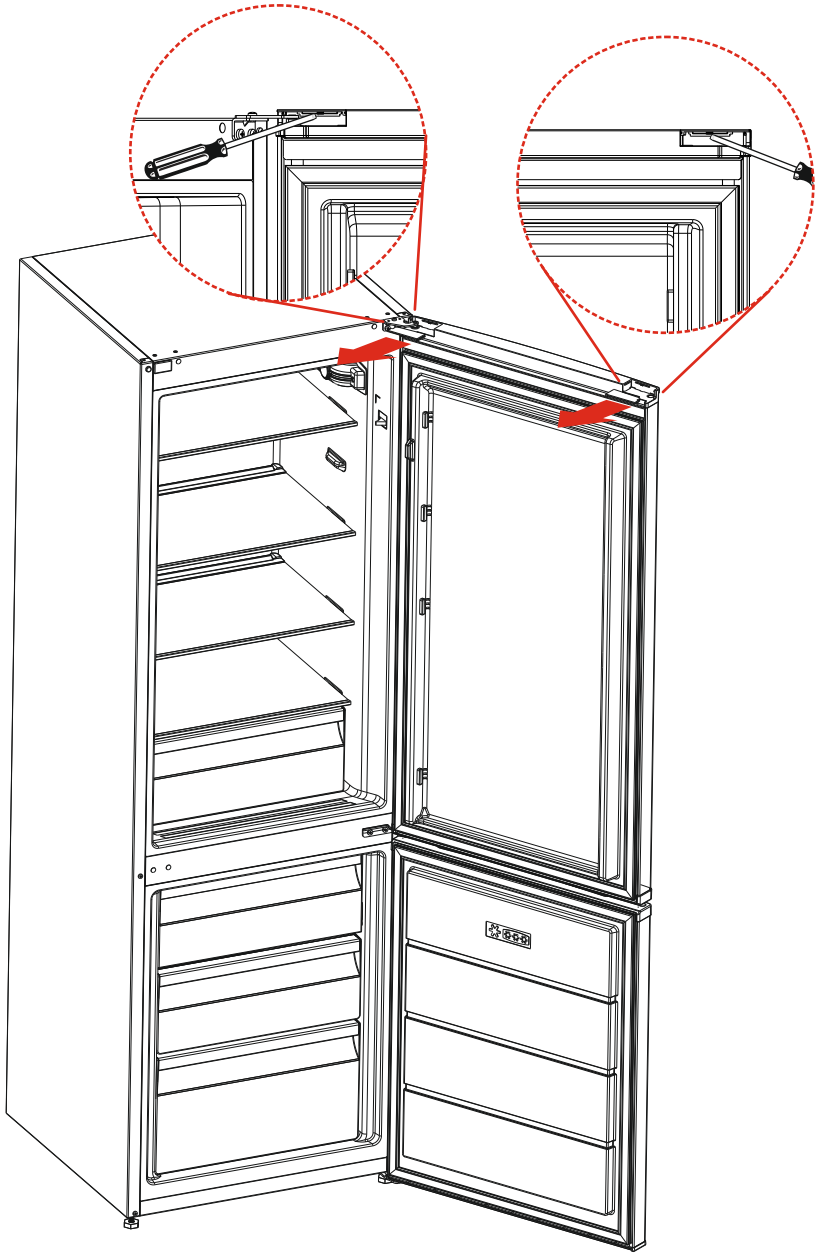

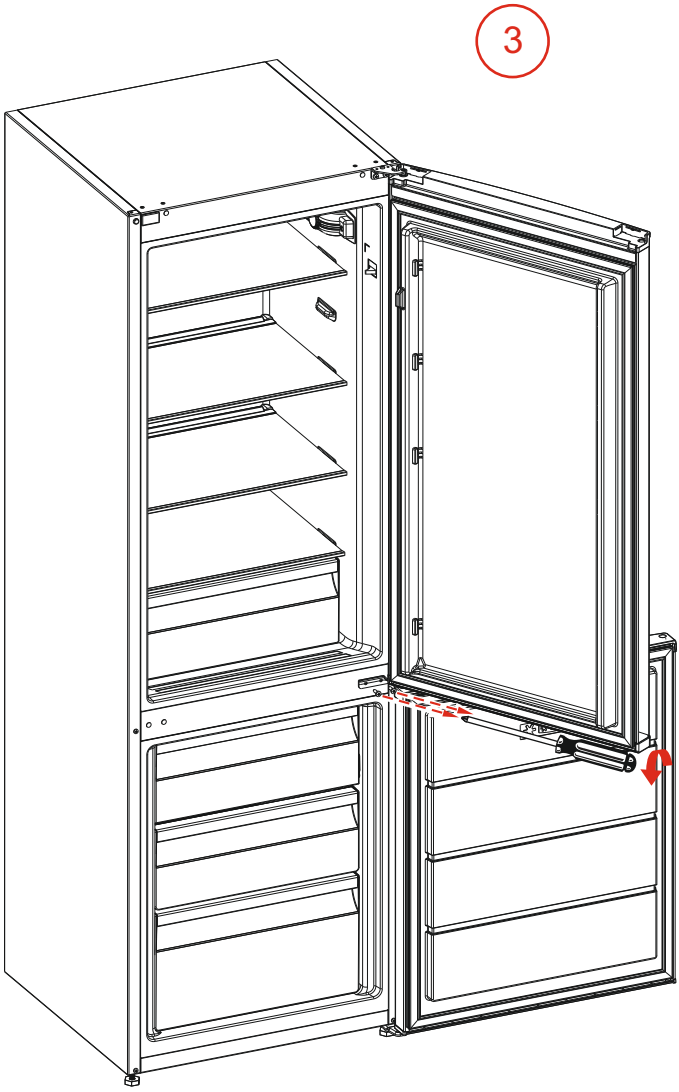
3

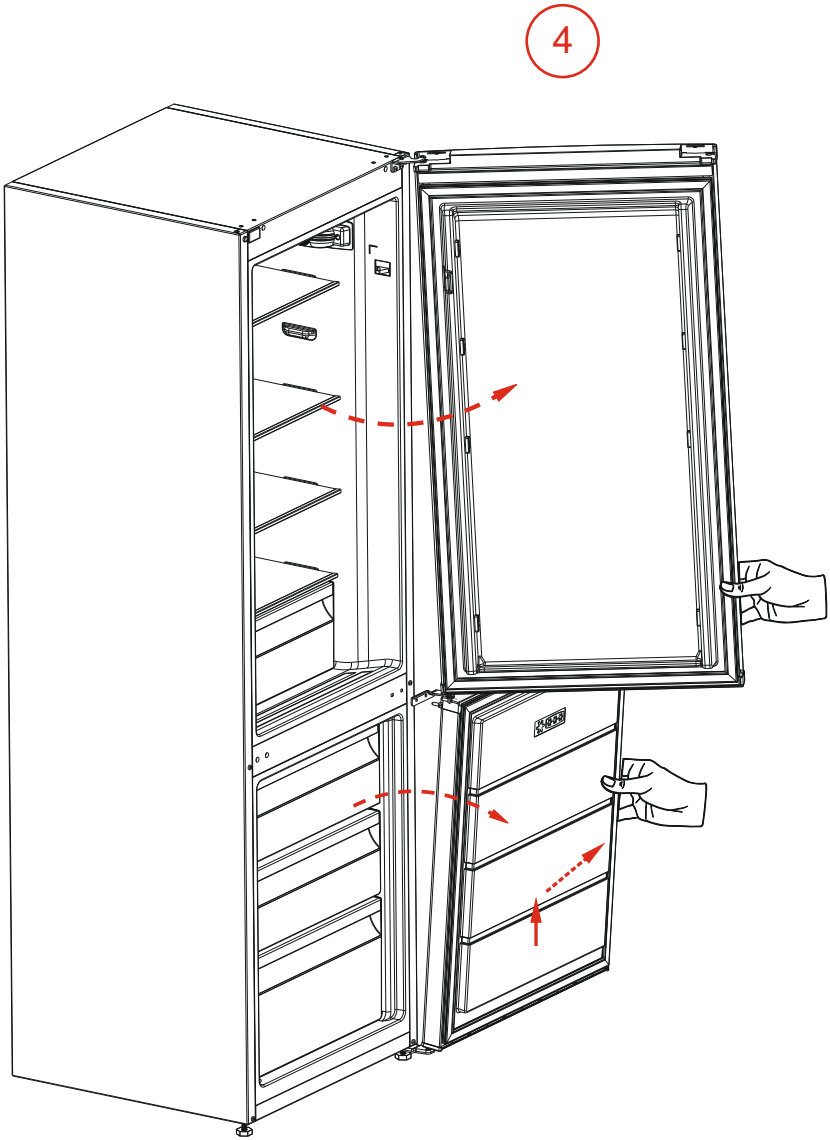
4

5

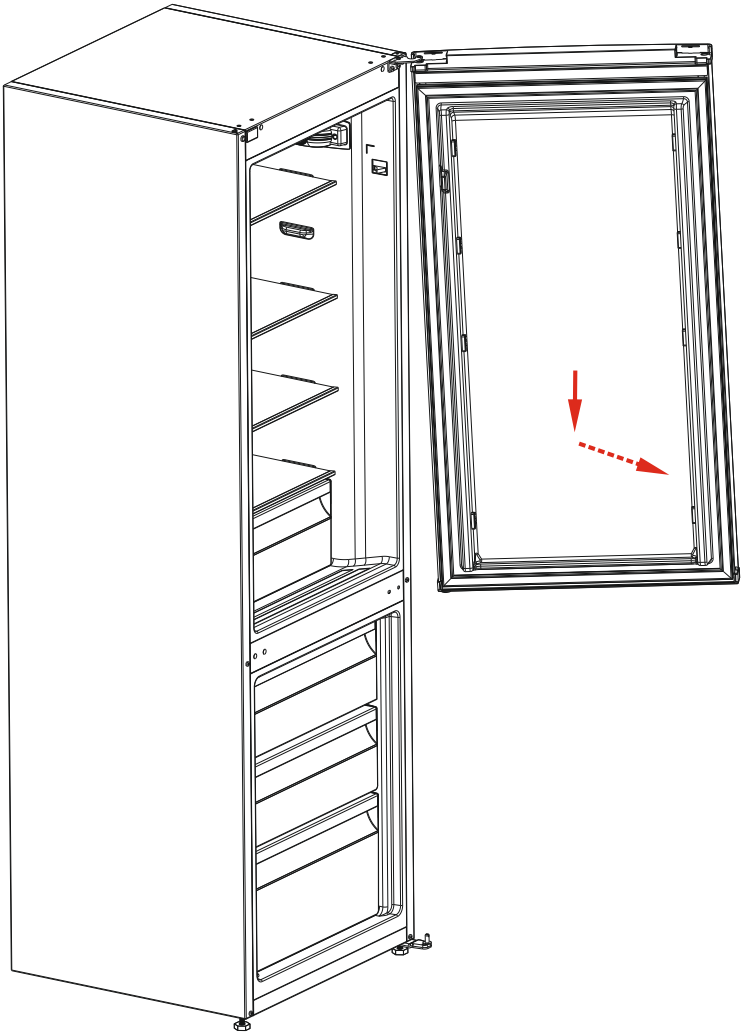

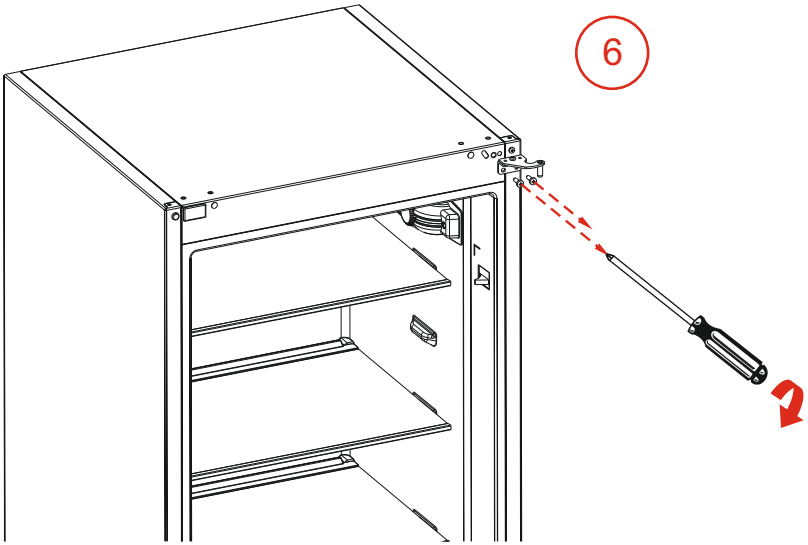
6

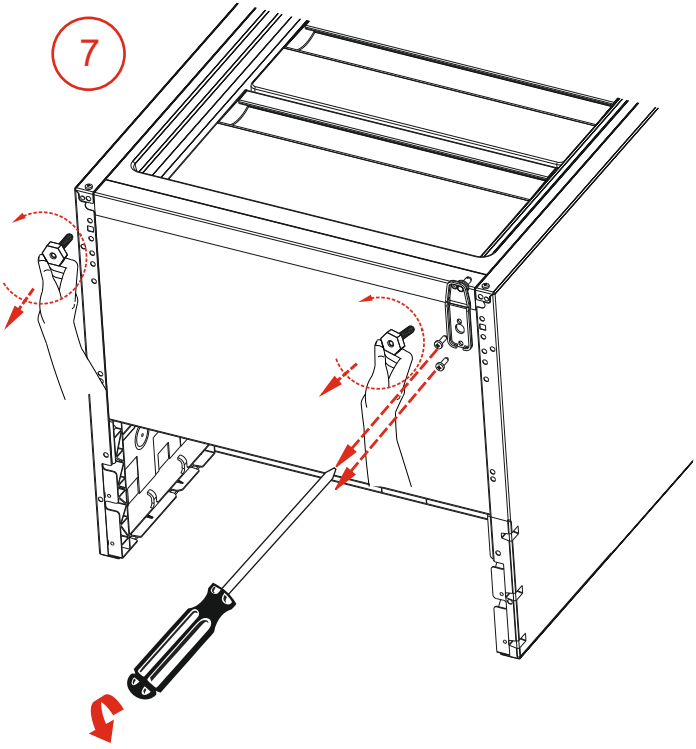
7

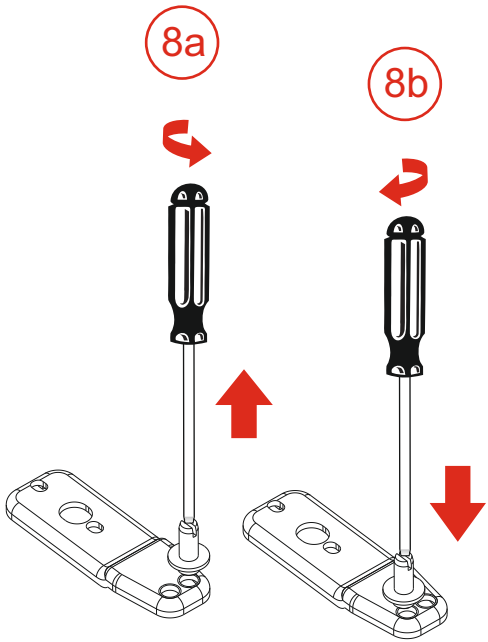
8a
8b

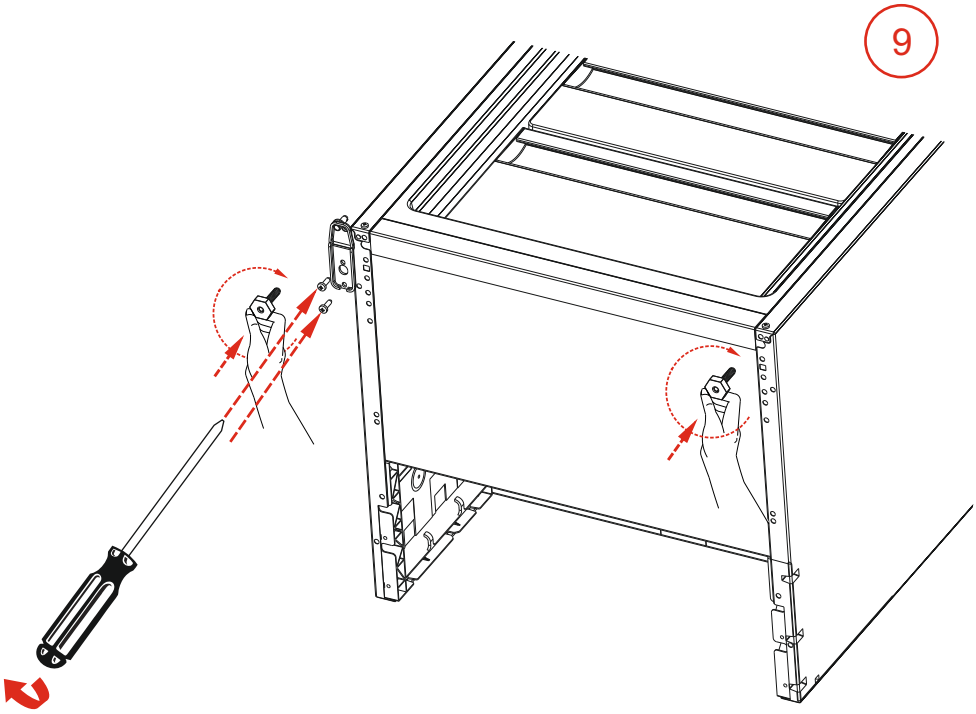
9

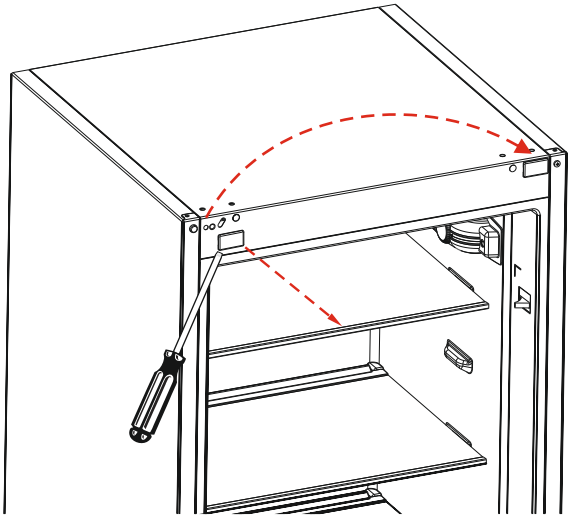
10

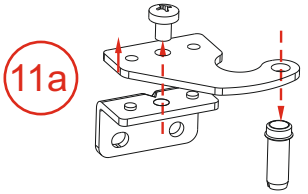
11a

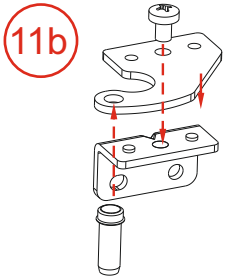
11b

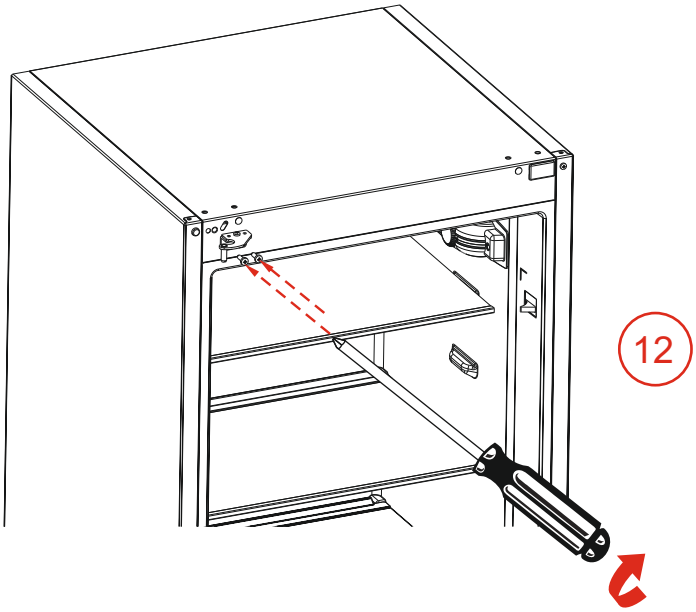
12

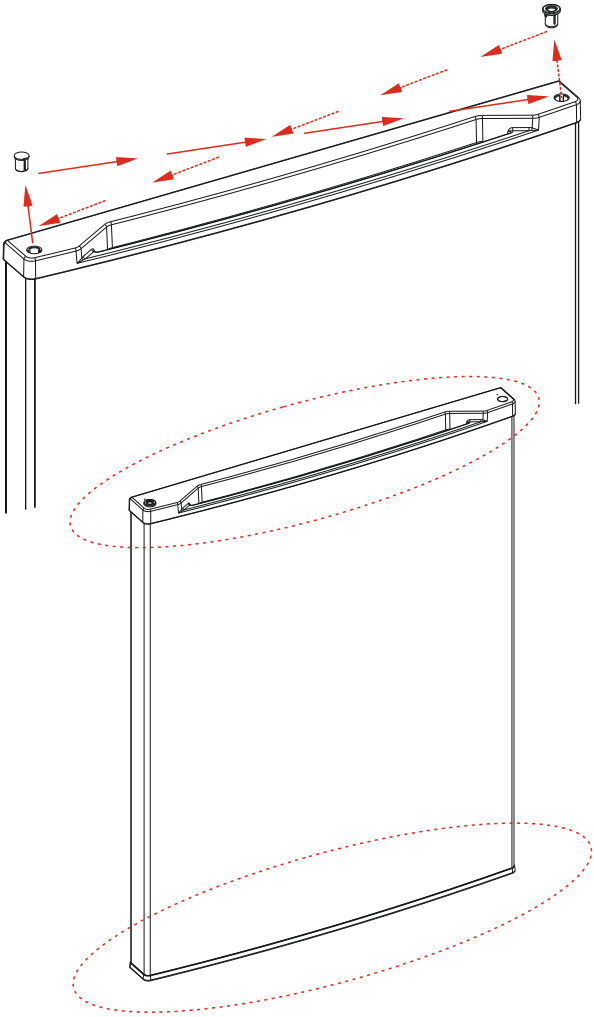
13

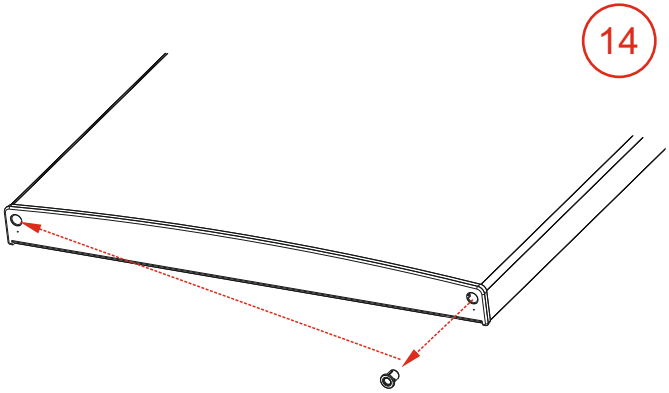
14

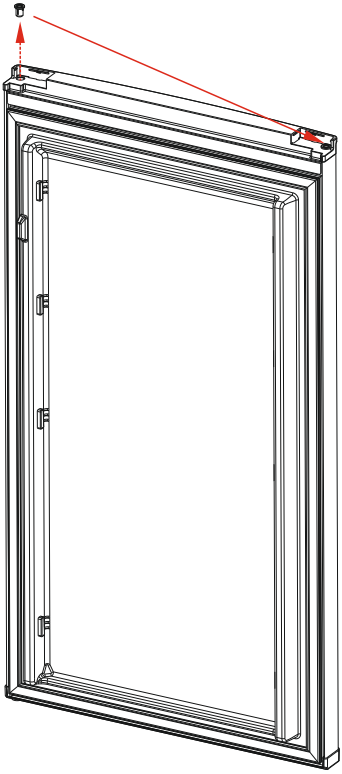

15

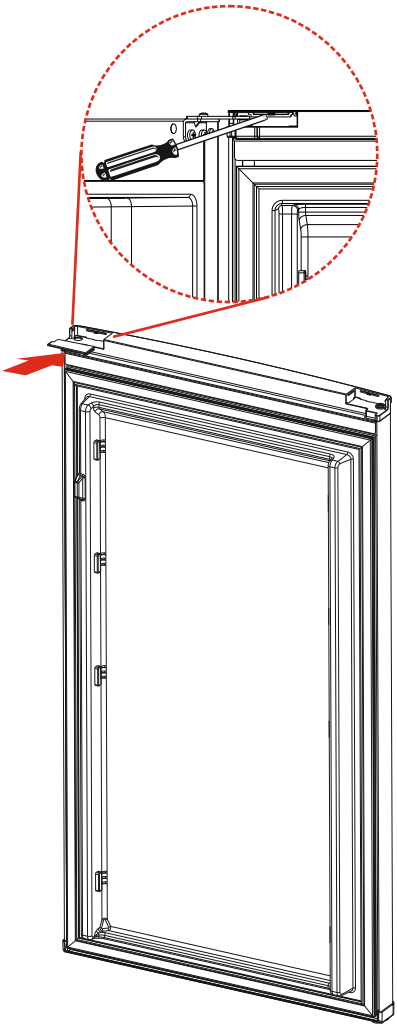

16

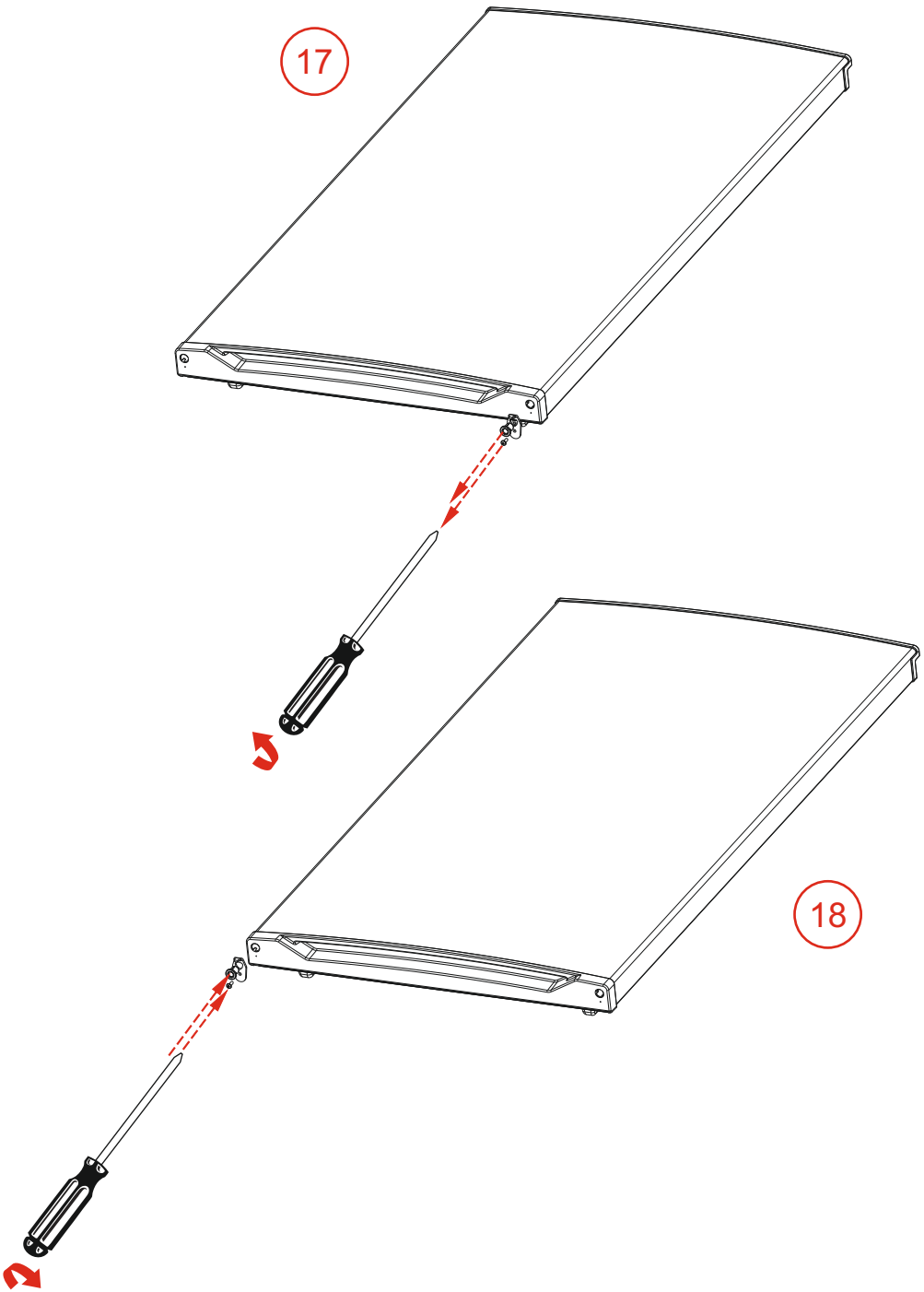
17
18

19

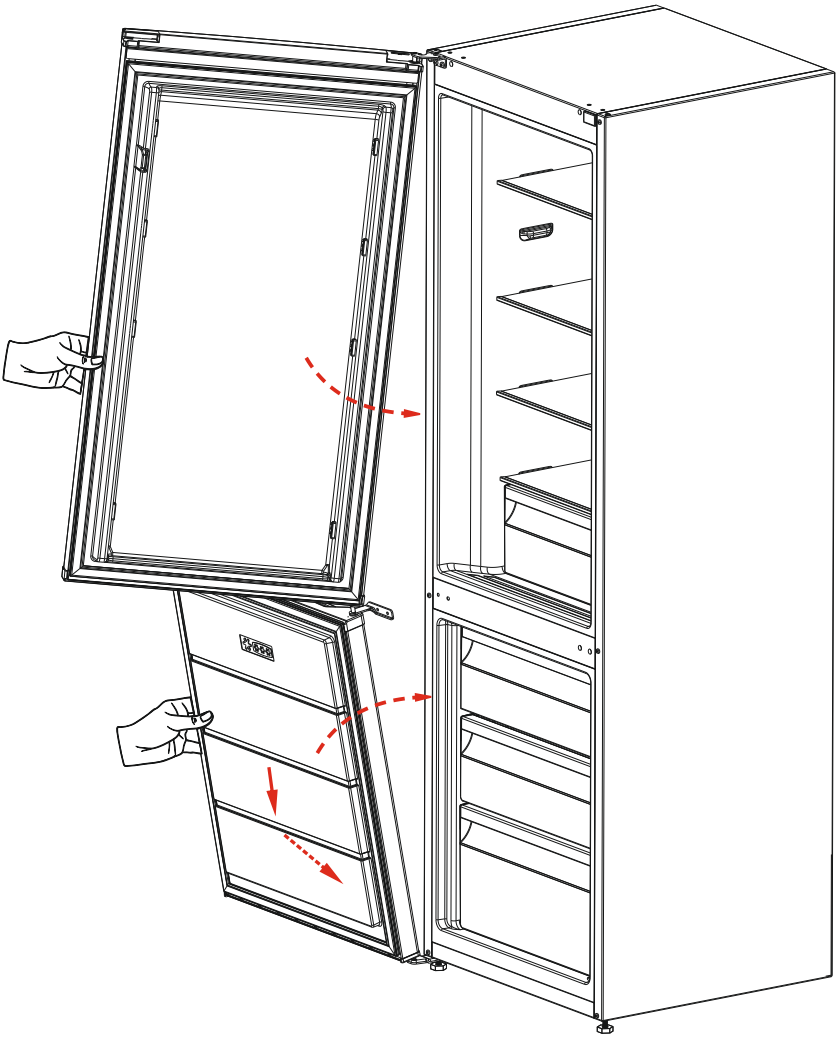

20

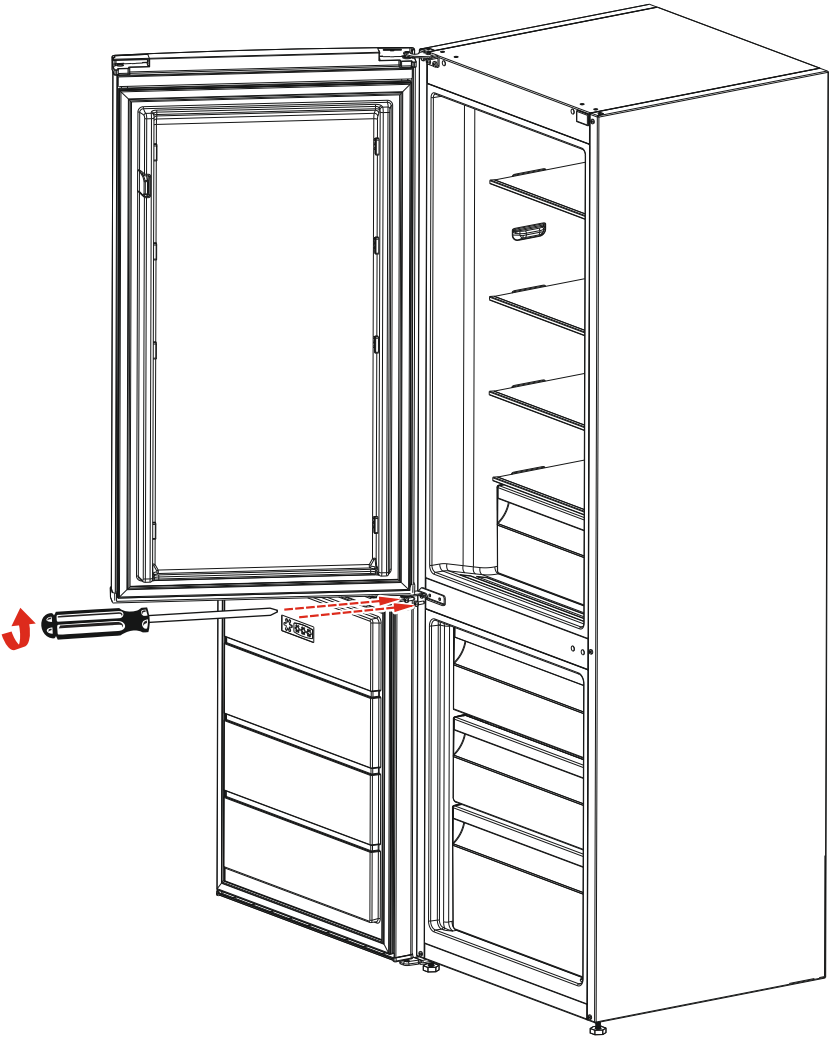

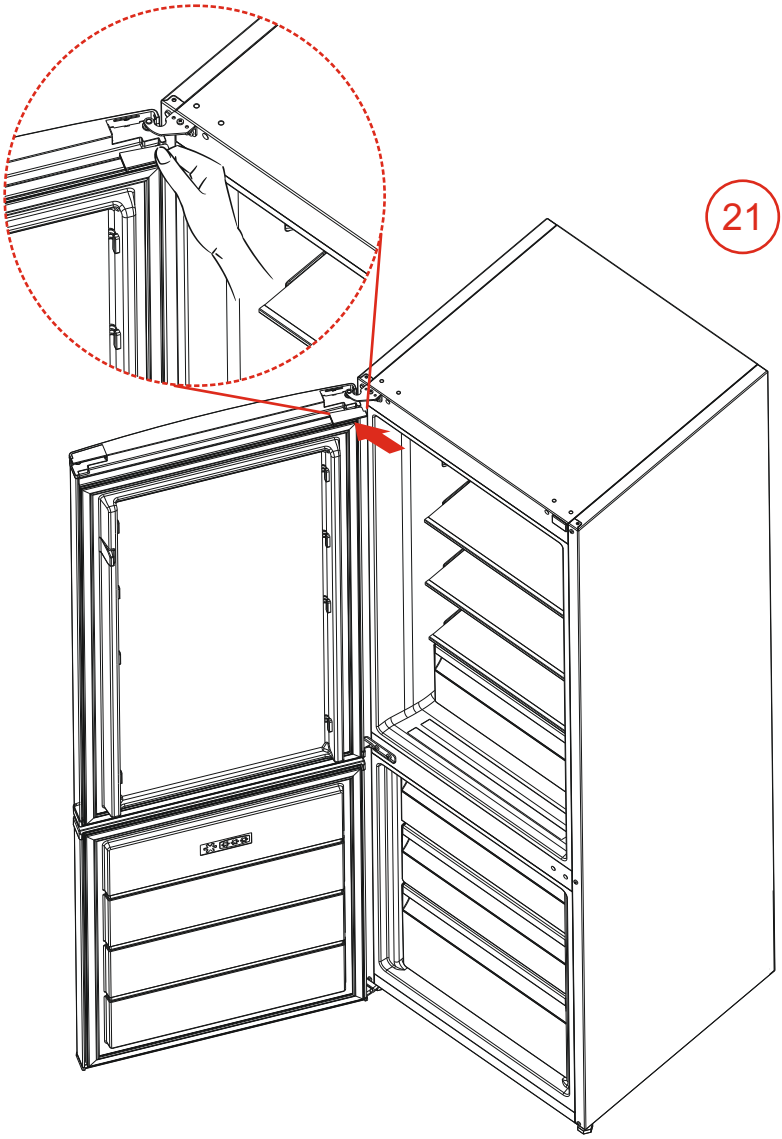
21

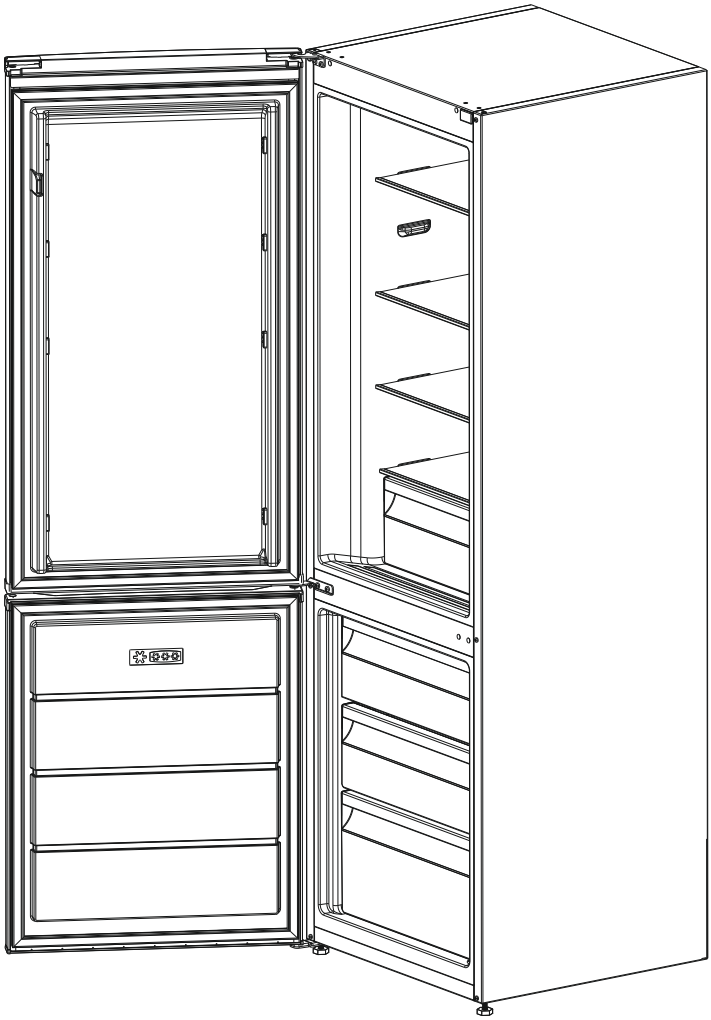

# Customer service

Before contacting Customer Services please ensure you have read the troubleshooting guide to see whether you can eliminate the problem yourself.

If you have a problem you cannot resolve, initially you should contact your retailer as they may be responsible for servicing your **fridge freezer.** If not, contact the Customer Service Department of Lec.

When you call customer service you will be asked to confirm which range and model you have.Look at the dataplate sticker on the inside of you **fridge freezer** at the bottom in the back left hand corner, this records the model and serial number.Make a note of them below as this information is required.

Information required:

Model number:

Serial number:

Date purchased:

Please note down some other information which may be useful:

Name of shop where purchased:

Purchase price:

(for insurance purposes)

## specification

In accordance with our policy of continual improvement, we may alter the specification without notice.

Should you sell or pass the Lec **fridge freezer** to someone else, make sure that this guide is also provided.

## contact numbers

Should you require any further information regarding your **fridge freezer** or any of our other products, please contact us at the address below.

Customer Services Department,
Lec Refrigeration
Telephone:0 44 815 3737
Stoney Lane,Prescot,Merseyside L35 2XW
www.lec.co.uk

## servicing

Repairs and maintenance of the appliance should only be performed by a qualified engineer.

# Lec Guarantee

Your Lec fridge free er is made from the very best materials to the highest standards of manufacture and has been extensively tested and inspected before leaving our factory. It conforms with current British and European Electrical Safety Standards. It is guaranteed for one year from the date of purchase, against mechanical and material defects, with the exception of light bulbs.

In the event of a defect to which this guarantee applies, please produce your receipt (as proof of purchase) to your supplier, who will make the necessary arrangements for rectification as quickly as possible.

This guarantee does not apply if:

- The fridge free er has been improperly installed or used in a manner contrary to the operating instructions issued with it.
- The fridge free er has been treated in an abnormal or abusive manner
- The fridge free er has been used for industrial or commercial purposes.
- Any repair work has been carried out by any person other than a Lec approved engineer.
- Any parts have been fitted which are not genuine Lec approved parts.
- The fridge free er has been modified in any way or the serial number has been removed or altered.
- Any toxic or corrosive products have been used or stored in or near to the fridge free er.

Without prejudice to the rights of the buyer no liability is accepted for any consequential loss or damage resulting from failure of the fridge free er or for any reason whatsoever. You are strongly advised to ensure under the special Lec Food and Freezer Scheme which is enclosed with this guarantee or which is obtainable from the company.

Acceptance of this guarantee does not affect your statutory rights: Consumer Transactions (Restrictions on Statements)Order 1976.

This guarantee is applicable only in the United Kingdom and Channel Islands.



Lec Refrigeration
Stoney Lane, Prescot, Merseyside, L35 2XW
0344 815 3737
www.lec.co.uk
Lec Refrigeration, a division of Glen Dimplex Home Appliances