BE807
BE811

Integrated fridge/freezer

INSTALLATION AND USER INSTRUCTIONS

Downloaded from www.Manualslib.com manuals search engine

Integrated fridge/freezer

Thank you for purchasing a Belling product.
Please read this instruction book thoroughly before attempting to use the product.



Please read these instructions carefully before installing or using this appliance.
This appliance should be mounted and installed in compliance with these instructions, current standards and regulations.
The electrical connection should be carried out by a suitably qualified electrician.

Choosing the Right Place

Place the appliance in a dry and regulariy ventilated room. The allowed ambient temperature for the appliance is from +16°C to +32°C.
In case the appliance is exposed to temperatures lower than +16°C, the operation of the refrigerator is normal, yet the temperature in the freezing compartment is raised which shortens the storage time of the frozen foods. Never place the appliance near heat emitting devices (e.g. cooker, radiator, water heater or similar devices) and do not expose it to direct sunlight.

Installation Dimensions and Required Air Circulation	**3**
Changing the Direction of Opening the Door	**4-5**
Installing the Appliance	**6-7**
Connection to the power supply	**8**
User Instructions	**9**
Before Use	**10-12**
Description of the Appliance	**13-14**
Operation Control	**15**
Use	**16-19**
Maintenance and Cleaning	**20-21**
Trouble-Shooting Guide	**22-23**
Calling for Service	**Back Cover**

Downloaded from www.Manualslib.com manuals search engine

Installation Dimensions and Required Air Circulation

The rear wall of the appliance gets warm during the operation of the appliance and water evaporates from the drain pan on the compressor. You must therefore provide for adequate air circulation on the rear of the appliance.

- At the base of the kitchen unit intended for building in the integrated appliance, there should be at least 200 cm² free space, for adequate air circulation.
- On the upper part of the appliance the air comes out, so do not cover the opening for the outflow air.

A (mm)	B (mm)	C (mm)
846	840	1775-1780

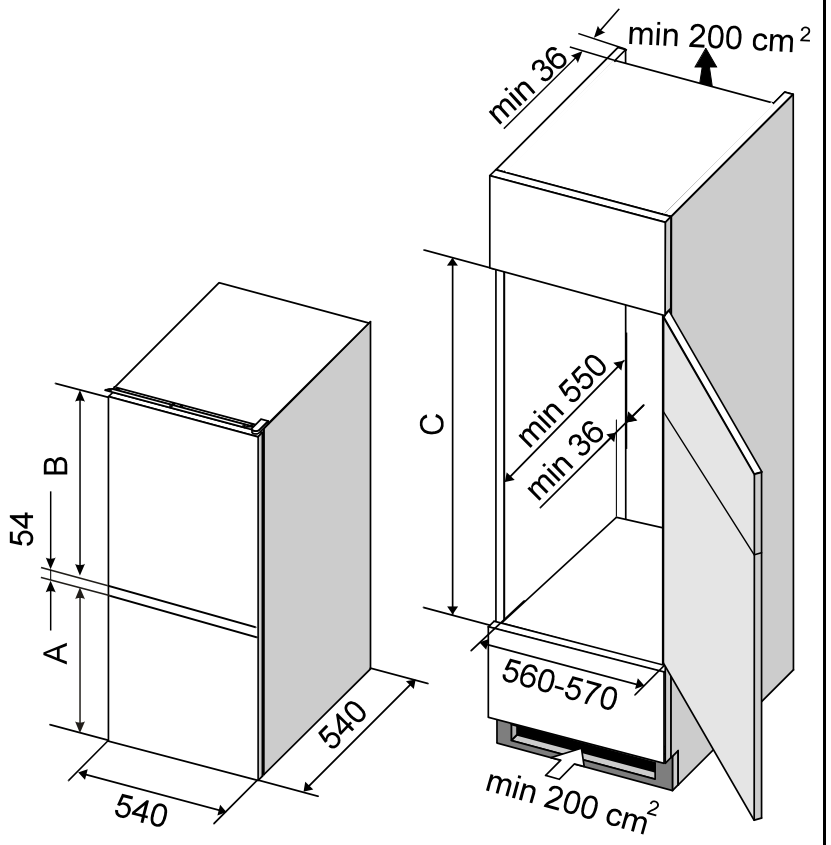

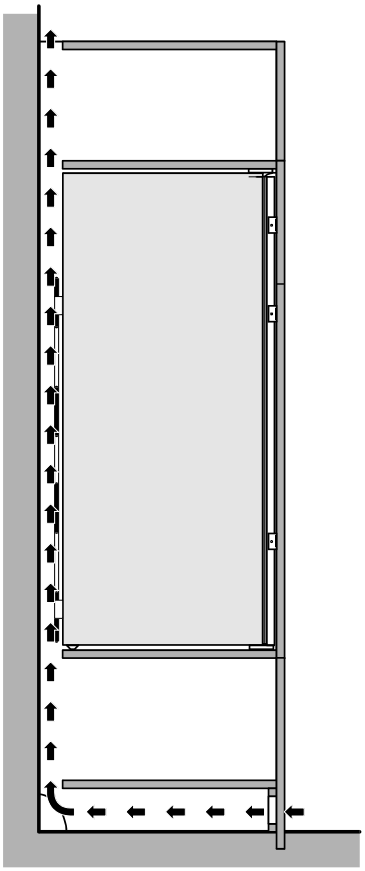

Downloaded from www.Manualslib.com manuals search engine

Reversing the door opening

If you find the door opening direction of your appliance inconvenient, you can reverse it. The necessary holes on the opposite side of the appliance cabinet have been made in the factory and plugged.

- Remove the top hinge cover of the refrigerator door. Remove the door by unscrewing the hinge (the door is supported only by the bottom hinge) and remove the hinge washer.
- Unscrew the top fixing strip, move it to the opposite side of the appliance and fasten it.
- Unscrew the bottom hinge and washer of the freezer door and remove the lower door.
- Unscrew the top hinge of the freezer door and the bottom hinge of the refrigerator door.
- Remove the corner caps from the door and reposition them (instead of the corner cap with a hole insert the one without it, and vice versa).
- Take off the washer from the bottom hinge of the freezer door (by turning it in clockwise), pull out the bottom hinge pivot and fit into opposite side.
- Put the freezer door on the bottom hinge.
- Turn the bottom hinge of the refrigerator door by 180°, insert the hinge and the washer into the hole of the corner cap on the freezer door and fasten it. Use the same procedure for the top hinge of the freezer door and screw it on the opposite side of the upper door. Put the washer and the upper door on the hinge.
- Screw the top hinge of the refrigerator door and replace the cover.
- Reposition the slide guides on the opposite sides of both doors.
- Plug the remaining holes with decorative caps.
- After you have reversed the door, check if the magnetic gasket seals correctly. It must not be creased and must seal all around the door.

Downloaded from www.Manualslib.com manuals search engine

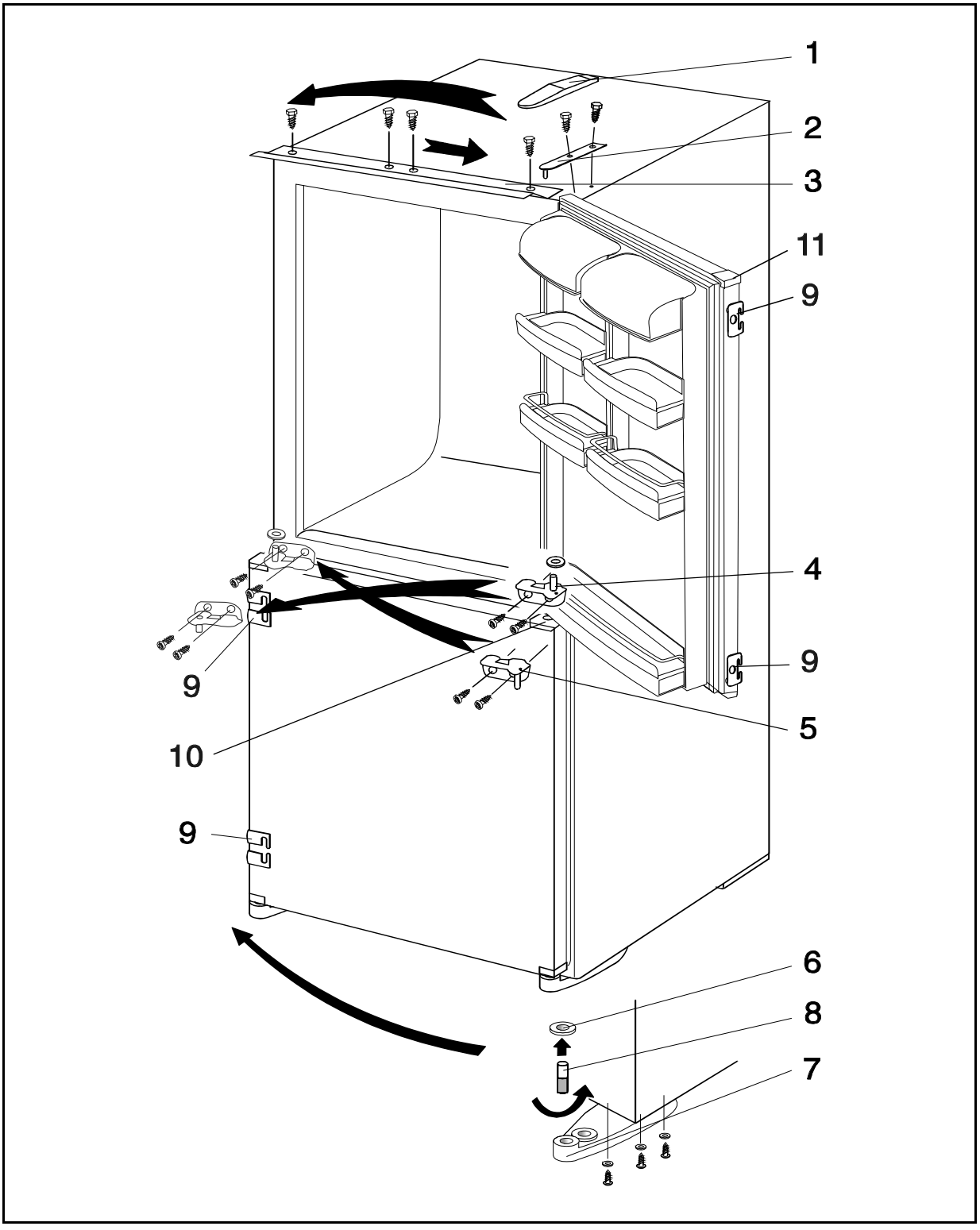

1 Top hinge cover of the refrigerator door
2 Top hinge of the refrigerator door
3 Top fixing strip
4 Bottom hinge of the refrigerator door
5 Top hinge of the freezer door
6 Washer
7 Bottom hinge of the freezer door
8 Bottom hinge pivot of the freezer door
9 Slider guide
10 Corner cap with a hole
11 Corner cap without a hole

Downloaded from www.Manualslib.com manuals search engine

Installing the Appliance

WARNING

Before mounting the appliance into the kitchen unit, disconnect the power supply and set the thermostat knob to **STOP (0)** position.

- Push the appliance for some 38 mm into the kitchen unit and allow at least 4 mm free space on both sides between the appliance and the side walls of the kitchen unit (Fig. 1).
- Widely open both the doors and put them together with the door of the kitchen unit. The procedure is as follows:
  - Put together the appliance door and the door of the kitchen unit (Fig. 2).
  - Insert the slides into the guides and fix them on the kitchen unit door some 15 mm from the edge, using the A 4 x 12 screws (Fig. 3).
  - Remove the slide guides and separate the appliance door from the door of the kitchen unit.
  - Fix the slides and be careful not to move them while fixing (Fig. 4).
  - Fix the slide guides to the original position.
  - Close the door and check the gasket (it should not be creased). The door should open and close smoothly.
- Fix the appliance into the kitchen unit. On the upper side, fix the three screws A 4 x 12 through the rail and on the lower side with two screws A 4 x 16, through the lower hinges. Drill holes, ø 3 x 5 (Fig. 5).
- Seal the gap on the opposite side of the hinge with the enclosed seal (Fig. 6).

Downloaded from www.Manualslib.com manuals search engine

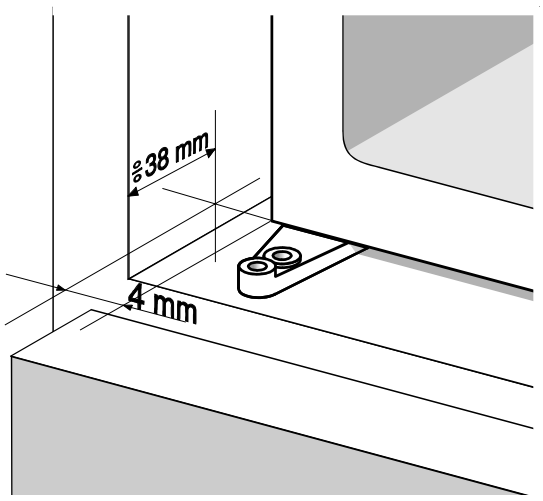

Fig. 1

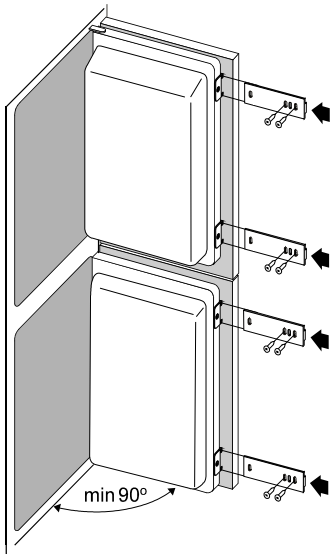

Fig. 2

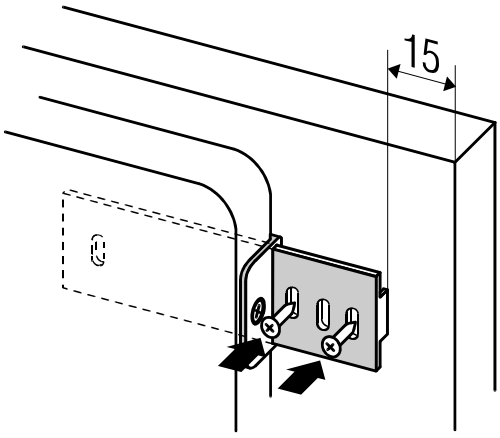

Fig. 3

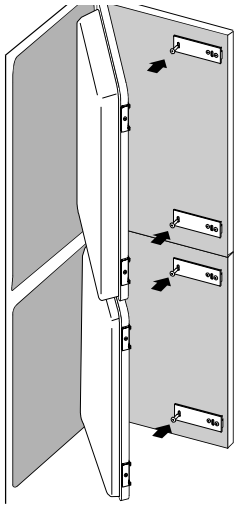

Fig. 4

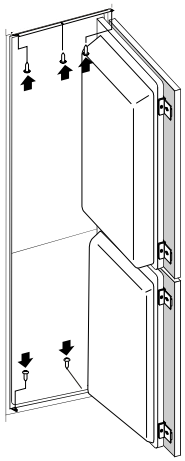

Fig. 5

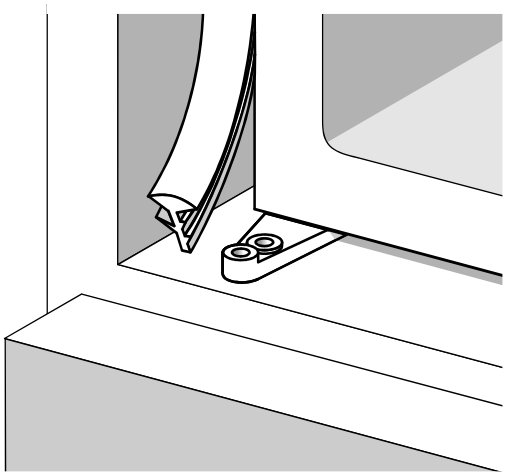

Fig. 6

Downloaded from www.Manualslib.com manuals search engine

Connection to Power Supply

Connect the appliance with the cable and plug to a suitable 13 amp socket which is properly earthed.
Required nominal voltage and frequency are indicated on the rating plate. The connection to the mains supply and earthing have to be made according to current standards and regulations. The appliance resists temporary voltage tolerance up to -15 to +10 %.
If the fitted plug is not suitable for your socket outlet, then it should be cut off and disposed of safely in order to avoid a possible shock hazard. A suitable plug of 13 amp or 15 amp rating should then be fitted to the cable.

The wires in the mains lead are coloured in accordance with the following code:

BLUE	NEUTRAL
BROWN	LIVE
GREEN AND YELLOW	EARTH

1. The GREEN AND YELLOW wire must be connected to the terminal in the plug which is marked with the letter E or by the earth symbol ⏚ or coloured green or green and yellow.
2. The BLUE wire must be connected to the terminal which is marked with letter N or coloured black.
3. The BROWN wire must be connected to the terminal which is marked with the letter L or coloured red.

Downloaded from www.Manualslib.com manuals search engine

User Instructions

Integrated fridge/freezer

This integrated fridge/freezer is for domestic use only.
The upper part of the appliance is the refrigerator and is used for storing fresh foods at temperatures of 0°C and higher.
The lower part is the freezer and is used for freezing fresh foods and storing frozen foods for longer periods of time (up to one year, depending on the kind of foods you store). The compartment is marked with four stars.

Downloaded from www.Manualslib.com manuals search engine

Before Use

- Before connecting the appliance to the mains supply, let it stand for about 2 hours, to reduce possibilities of malfunctions in the cooling system due to transport and handling.
- Clean the appliance thoroughly, especially inside (See Cleaning and Maintenance).

We Care for the Environment

- Our products use environmentally friendly packaging, which can be either recycled or disposed of in an environmentally friendly manner. To this end, individual packaging materials are clearly marked.
- These instructions are printed either on recycled paper or chlorine free bleached paper.
- To minimise the risk of injury to children please dispose of your product carefully and safely. (See section on Disposing of your appliance).

Tips for Energy Savings

- Try not to open the door too often, and close it as soon as possible.
- Every now and then check if the appliance is sufficiently ventilated (adequate air circulation behind the appliance).
- Set thermostat to lower settings as soon as possible (depends on the amount of food loaded, ambient temperature etc).
- Never use continuous operation unless required; switch the operation mode selection switch to the setting for automatic operation as soon as possible.
- Before loading the appliance with packages of fresh foods, make sure they are cooled to ambient temperature. (except for soup)
- Ice and frost layers increase energy consumption, clean the appliance as soon as the layer is 3-5 mm thick.
- If the gasket is damaged or if it turns out that the sealing is poor, the energy consumption is substantially higher. To restore efficiency, replace the gasket.
- The condenser on the rear wall should be always clean, free of dust or any impurities.

Downloaded from www.Manualslib.com manuals search engine

Important



- If you have bought this appliance to replace an old one equipped with a lock that cannot be opened from inside (lock, bolt), make sure that the lock is broken. This will make it impossible for children to lock themselves inside the appliance and suffocate.
- The appliance must be correctly connected to the mains supply. (see: Connecting to the Mains Supply).
- If the food has strange smell or colour, throw it away, because it is very likely that it is spoiled and therefore dangerous to eat.
- Disconnect the appliance from the power supply before repairing it (only a qualified technician should repair it), before cleaning and before replacing the light bulb.
- Do not defrost the appliance with other electric devices (hair dryer etc.) and never scrape the ice or frost layer with sharp tools. Use only enclosed tools or tools recommended by the manufacturer.
- For the sake of environment protection - be careful not to damage the rear wall of the appliance (the condenser unit or the tubes - for example when moving the appliance) or any part of the refrigerating system inside the appliance. Do not use sharp objects for defrosting the appliance. Use only enclosed tools or tools recommended by the manufacturer.
- The refrigerating system of the appliance is filled with refrigerant and oil, so when the appliance is damaged, handle it with care and dispose it of in compliance with environmental protecting precautions. (See We Care for the Environment).
- The heating element incorporated in the appliance, all around the rim, is controlled by the operation of the compressor and it prevents the door gasket freezing on to the freezer housing.
- In the supply cord is damaged, it must be replaced by the manufacturer or his service agent or a qualified person in order to avoid hazard.
- The rating plate is inside the appliance or outside on the rear wall.

Storing Time During Power Supply Interruption

Do not open the freezer in case of failure or power supply interruption! In case the interruption is extended over longer period of time (15 hours), take food out of the freezer and use it, or make sure that is sufficiently cooled (perhaps you have an extra appliance).

Downloaded from www.Manualslib.com manuals search engine

Disposing of the Appliance

- To minimise the risk of injury to children please dispose of your product carefully and safely. Remove both doors. Remove the mains cable (where fitted) by cutting off flush with the appliance and always ensure that no plug is left in a condition where it could be connected to the electricity supply.
  To help the environment, Local Authority instructions should be followed for the disposal of your product.
- The refrigerating system of the appliance is filled with refrigerant and insulating substances which should be separately treated and processed. Call your nearest Local Authority or specialised servicing centre. Be careful not to damage the tubes on the rear wall of the appliance (danger of pollution).

Downloaded from www.Manualslib.com manuals search engine

Description of the Appliance

Refrigerator (A)

The refrigerator is used for storing fresh foods for few days.

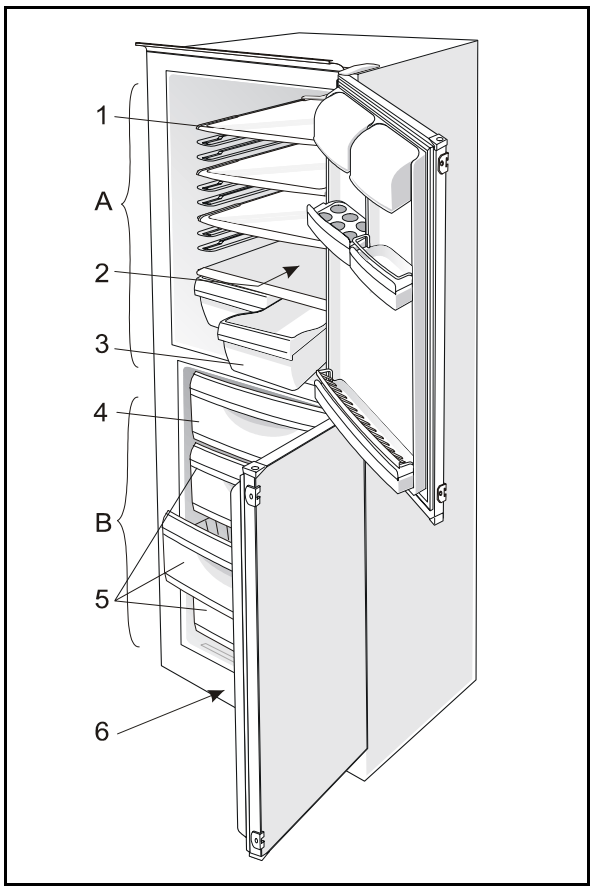

Shelf (1)

The shelves can be placed on the guides inside the appliance. They are secured against pulling out. If you want to remove a shelf, slightly lift up the back part and pull it out.
Quickly perishable food should be stored on the back i.e. the coldest part of the shelves.

Defrost Water Outlet (2)

The interior of the refrigerator is cooled with a cooling plate incorporated in the rear wall. Under the plate there is a channel and an outlet for defrost water. Regularly check the defrost water outlet and the channel to prevent blockage. If blocked, use a plastic straw and clean it.

Fruit and Vegetable Container (3)

The containers are on the bottom under the glass shelf and are used mainly for storing fruit and vegetables.

Door Liner

The door liner consists of various shelves or holders used for storing eggs, cheese, butter and yogurt as well as other smaller packages, tubes, cans etc. The lower shelf is used for storing bottles.

Illumination in the Interior of the Refrigerator

The light for illuminating the interior of the appliance comes on when the door is opened. The operation of the light does not depend on the position of the thermostat knob.

Downloaded from www.Manualslib.com manuals search engine

Freezer (B)

Freezer is used for freezing fresh foods and for storing already frozen foods.

Freezing Compartment (4)

is used for freezing fresh foods.

Storing Compartment (5)

is used for storing packages of frozen foods.

Defrost Water Outlet (6)

(See Cleaning and Maintenance).

Downloaded from www.Manualslib.com manuals search engine

Operation Control

The appliance is controlled with the thermostat knob, situated in the upper right of the refrigerator.
Turn the knob clockwise from **STOP (0)** position towards **7** and backwards.

Temperature Selection

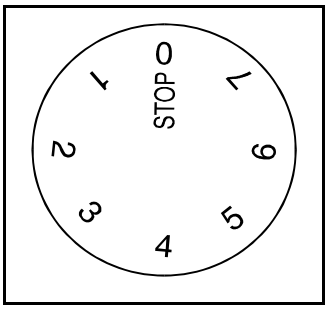

- Higher settings on the knob (towards **7**) mean lower temperatures (colder) in all compartments of the appliance. Temperature in the interior of the appliance may even drop below 0°C.
  When the ambient temperature is normal, we recommend medium setting.
- Changes of the ambient temperature affect temperature in the interior of the appliance (choose correct setting of the thermostat knob).
- In **STOP (0)** position the appliance does not operate (the cooling system is switched off), yet power supply is not interrupted (the light is on, when you open the refrigerator door).

Downloaded from www.Manualslib.com manuals search engine

Use

Storing Fresh Foods

Proper use of the appliance, adequately packed food, correct temperature and taking into account hygienic precautions will substantially influence the quality of the food stored.

- Foods to be stored in the refrigerator should be properly packed as to prevent mixing various moisture degrees and odors (in polyethylene bags or sheet, aluminium foil, wax paper), or stored in covered containers or bottles.
- Before storing food in the refrigerator, remove the excessive packaging (like yoghurt in multi-package).
- Pack systematically and make sure that foodstuffs do not touch each other (various odours may mix). Assure adequate air circulation around packages.
- Never store inflammable, volatile or explosive substances.
- Beverages with high alcohol percentage shall be stored in tightly sealed bottles in vertical position.
- Food should not touch the rear wall of the refrigerator!
- Foods should be cooled down before storing.
- Crispy and delicate foods should be stored in the coldest parts of the refrigerator.
- Try not to open the door too often.
- Set the thermostat to the setting where lower temperatures are reached. Set the thermostat gradually as to avoid freezing of the foods. Use a thermometer and measure the temperature in the individual compartments. Place the thermostat in a glass vessel filled with water. Temperature readings are most reliable a few hours after steady state is reached.
- Some organic solutions like volatile oils in lemon or orange peel, acid in butter etc. can cause damage and when in contact with plastic surfaces or gaskets for longer period of time they can cause accelerated ageing of the plastic material.
- Unpleasant odours inside the refrigerator is a sign that something is wrong with foods or that your refrigerator needs cleaning. Unpleasant odours can be eliminated or reduced by washing the interior of the refrigerator with a mild solution of water and vinegar. We also recommend using activated carbon filters to clean the air or to neutralize odors.
- If you plan a longer journey, make sure to remove quickly perishable articles of food out of the appliance before you leave.

Downloaded from www.Manualslib.com manuals search engine

Fresh Food Storage Time in the Refrigerator

Article of food	Storage time (days)													
	1	2	3	4	5	6	7	8	9	10	11	12	13	14
Butter	+	+	+	+	+	+	+	=	=	=	=	=		
Eggs	+	+	+	+	+	+	+	+	+	+	=	=	=	=
Meat: fresh uncut	+	+	=											
chopped	+	=												
smoked	+	+	+	+	+	+	+	+	+	+	=	=	=	=
Fish	+	=												
Marinade	+	+	+	+	+	+	+	+	+	+	=	=	=	=
Vegetables	+	+	+	+	+	+	+	+	=	=	=	=	=	=
Cheese	+	+	+	+	=	=	=	=	=	=	=	=	=	=
Sweets	+	+	=	=	=	=								
Fruit	+	+	=	=	=	=	=	=	=	=				
Prepared dishes	+	+	=	=										

Legend: + recommended storage time
= possible storage time

Freezing Fresh Foods

- Carefully select food you intend to freeze; it should be of adequate quality and suitable for freezing.
- Use correct packaging and wrap it right.

– The packaging should be air tight and shouldn't leak since this could cause substantial vitamin loss and dehydration of foods.

– Foils and bags should be soft enough to tightly wrap around the foods.

- Mark packages with following data: kind and amount of foods and the date of loading.
- It is most important that the food is frozen as quickly as possible. Therefore we recommend the size of the package not to be too large and to be cooled before loading into the freezer.
- The amount of fresh foods that can be loaded in the freezer within 24 hours is indicated on the rating plate (freezing capacity). If the loaded amount is too large, the quality of freezing is reduced which affects the quality of frozen foods.

Freezing Procedure

- Switch on the integrated switch for fast freezing of foods, some 24 hours before loading the appliance with larger amounts of fresh foods and turn the thermostat knob to position **4-6**. After 24 hours load the appliance with fresh food packages. After loading, wait for another 24 hours and **switch off the switch** and turn the thermostat knob to required position (see "Temperature selection").

Downloaded from www.Manualslib.com manuals search engine

- The switch is on, when the coloured mark is visible or is at position I, and off, when you don't see the mark or at position 0.
- The next time you want to freeze fresh foods, repeat the freezing procedure and be careful that packages with fresh foods do not touch frozen packages.

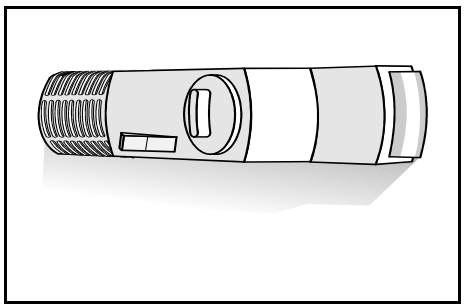

- For freezing smaller amount of foods (up to 1 kg) there is no need to change the thermostat setting (see Temperature Selection).

Storing Frozen Foods

Packages of frozen foods are stored in the basket. If you remove the baskets, you can store frozen packages directly on the cooling shelves.
The storage time and the recommended temperature for storing commercially frozen foods are indicated on the packaging. For storing and using consider the manufacturer's instruction. When shopping, be careful and choose only adequately packed foods provided with complete data and stored in freezers where the temperature is not higher than -18°C. Do not buy packages of food covered with frost layer. This indicates that the package was thawed before at least once. Be careful that packages don't start to thaw, as the temperature raise reduces the quality of foods.

Approximate Storage Time for Frozen Foods

Food	Storage time (in months)											
	1	2	3	4	5	6	7	8	9	10	11	12
Vegetable								+	+	+		
Fruit										+	+	+
Bread, Pastries			+									
Milk			+									
Redy-made meals			+									
Meat: Beef										+	+	+
Veal								+	+	+		
Pork				+	+	+						
Poultry								+	+	+		
Game						+	+	+				
Minced meat				+								
Smoked sausages	+											
Fish: lean			+									
fat	+											

Downloaded from www.Manualslib.com manuals search engine

Defrosting Frozen Food

Partially thawed or defrosted foods should be used as soon as possible. Cold air preserves the food but it does not destroy microorganisms which rapidly activate after defrosting and make foods perishable.

Partial defrosting reduces the nutritional value of foods, especially of fruits, vegetables and ready-made meals.

Downloaded from www.Manualslib.com manuals search engine

Maintenance and Cleaning

Automatic Defrosting of the Refrigerator

There is no need to defrost the refrigerator, because ice depositing on the inner back wall is defrosted automatically.

Manual Defrosting of the Freezer

When the frost and ice layer in the freezer is 3-5 mm thick, you should clean the freezer.

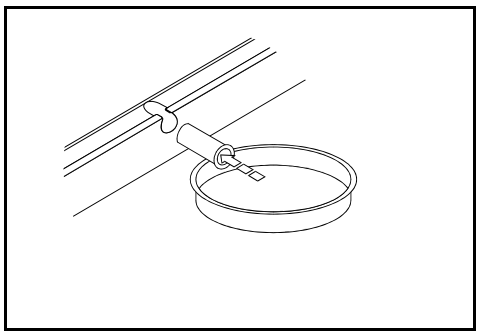

- Few hours before defrosting set the thermostat to position **7**, so that packages are well frozen. Reset the thermostat to **STOP (0)** position and disconnect the power supply. Empty the freezer and take care that the packages remain frozen.
- Insert the enclosed pipe into the groove in the bottom of the appliance and place a vessel underneath to collect the defrost water. Defrosting is accelerated if the door is left open.
- Avoid using defrosting sprays, as they may cause damage to the plastic parts and may be hazardous to health.

Cleaning the Appliance

Disconnect the power supply before cleaning the appliance.
Do not use coarse or aggressive cleaning agents as you can damage the surface.

- Clean the **exterior** with water and detergent.
  The application of abrasive and specially aggressive cleaners, such as stainless steel cleaners, is not appropriate for cleaning of plastic and coated parts.
- Remove the **detachable accessories** in the interior of the appliance and clean it with water and liquid detergent. Plastic parts cannot be washed in the dishwasher.
- Wash the **interior** of the appliance with lukewarm water, in which you may add one or two spoonfuls of vinegar.
- Every now and then wipe the **condenser** on the rear wall. Use a soft non-metal brush or vacuum cleaner.

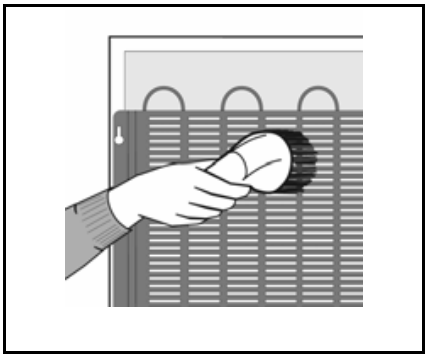

Downloaded from www.Manualslib.com manuals search engine

- Do not forget to clean also the defrost water **receptacle** above the refrigerator compressor (do not remove the receptacle).

After cleaning, connect the appliance to power supply and reload the packages.

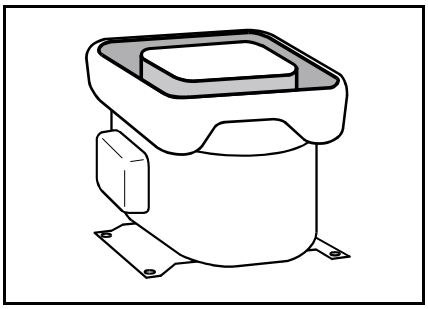

Switch Off the Appliance When Not In Use

If you do not intend to use the appliance for a longer period, set the thermostat knob to the **STOP (0)** position, disconnect the power supply, take out the foods and defrost and clean the appliance. Leave the door slightly open.

Downloaded from www.Manualslib.com manuals search engine

Trouble-Shooting Guide



The Appliance Fails to Operate After connecting to the Mains Supply

- Check the supply in the outlet socket and make sure the appliance is switched on (thermostat in operating position).

Continuous Operation of the Refrigerating System

- The door was frequently opened or it was left opened for too long.
- The door is not properly closed (the door may sag, the gasket may be polluted or damaged).
- Appliance overloaded with fresh foods.
- Inadequate ventilation of the compressor and condenser (check adequate air circulation and wipe off the condenser).

Ice Formation on the Inner Rear Wall

As long as the defrost water runs to the channel and through the opening to the drain pan on the compressor, automatic defrosting of the appliance is assured.
If the ice on the inner back wall is thicker (3-5 mm), the refrigerator should be manually defrosted.
Set the thermostat knob to **STOP (0)** position and leave the door open.
Never use electric devices for defrosting and do not scrape the ice or frost layer with sharp objects.
After completed defrosting, turn the knob to desired position and close the refrigerator door.
The cause of increased ice formation may be one of the following:
– the door does not seal well (clean the gasket if it is contaminated, or replace it if it is damaged);
– the door was frequently opened or it was left opened for too long;
– the food stored in the refrigerator was warm;
– the food or dish is touching the inner back wall.

Water is Leaking From the Refrigerator

If the discharge water outlet is clogged, or the defrost water drips over the channel, water leaks from the refrigerator.

- Clean the clogged opening, for example with a plastic straw.
- Manually defrost the increased ice layer. See "Ice Formation on the Inner Back Wall".

Downloaded from www.Manualslib.com manuals search engine

The Freezer Door is Hard to Open

If you want to open the door that has just or recently been closed, you may find it hard to open. The reason why this happens is, that when you open the door, warm air gets into the appliance and when it is cooling, the underpressure seals the door. After a few minutes (5-10), the door can easily be opened.

Noise

- The appliance shall be placed and levelled firmly on a solid base.
- It should not touch the wall or kitchen units standing next to it.
- Check the accessories in the interior of the appliance, they should be placed correctly in their positions; also check the bottles, tins and other vessels that might touch each other and rattle.

Bulb Replacement

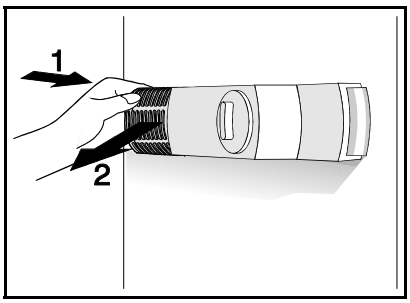

CAUTION: DISCONNECT THE APPLIANCE FROM THE ELECTRICITY SUPPLY BEFORE REPLACING THE LAMP

Press the cover at the rear side (in the arrow 1 direction) and remove the plastic cover (in the arrow 2 direction). Replace the bulb with a new one (E14, max. 15 W).

The light bulb is a consumable item therefore it is not covered by our guarantee.

Please ring our Spares Department on 01709 579907 for a replacement.

Downloaded from www.Manualslib.com manuals search engine

Calling for Service

Please consult your retailer in the first instance. If you experience difficulty contact Belling Appliances, After Sales Division.
Remember that you may be charged for the visit (even during the guarantee period) if nothing is found to be wrong with your appliance, so always check to make sure that you have not missed anything.

Belling Appliances Service Division:
Tel: 08457 454540 (all calls will be charged at local rate)

Before contacting a service agent, please note the following details about your appliance.

Date of Purchase _____

Also note your Postcode _____

Model number _____

Serial Number _____

Belling Appliances Ltd., Mexborough, South Yorkshire S64
Part No. GBE807001/11/01

Downloaded from www.Manualslib.com manuals search engine