Delfield®

INSTALLATION & OPERATION MANUAL

Please read this manual completely before attempting to install or operate this equipment!
Notify carrier of damage! Inspect all components immediately. See page 2.

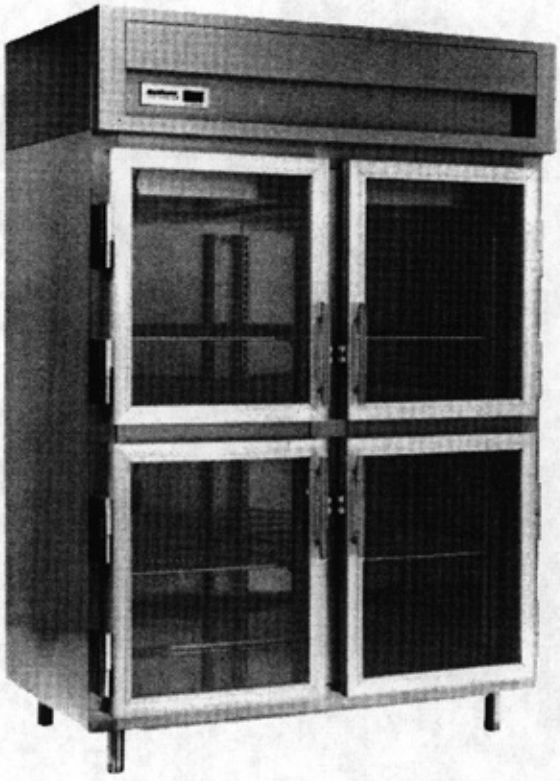

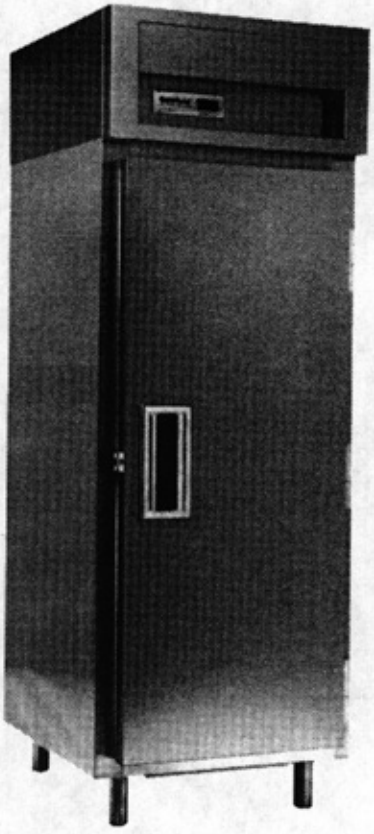

SPECIFICATION LINE®

Refrigerators, freezers & heated storage cabinets

Effective April 1995

CONTENTS

RECEIVING AND INSPECTING 2
SPECIFICATIONS
- Reach-ins and pass-throughs 3
- Roll-ins and roll-throughs 4

INSTALLATION
- Reach-ins and pass-throughs 5
- Roll-ins and roll-throughs 6

BASIC OPERATION 8
MAINTENANCE 9
MCII TEMPATROL®
- Controls 10
- Display functions 11
- Programming 12
- Defrost settings 14
- Optional settings 15
- Self-diagnostic system 16

REFERENCE CHARTS
- MCII Tempatrol® **CHECK SYSTEM** warnings 17
- MCII Tempatrol® diagnostic codes 17
- MCII Tempatrol® display 18
- MCII Tempatrol® troubleshooting 18

WIRING DIAGRAMS
- 115V refrigerators and freezers 19
- 115/208-230V refrigerators and freezers 20
- Combination refrigerator/freezers 21
- Heated storage cabinets 22

REPLACEMENT PARTS LISTS
- Refrigerators and freezers 24
- Heated storage cabinets 25

WARRANTIES 26–27
AUTHORIZED PARTS DEPOTS ..... back cover

SERIAL NUMBER LOCATION

To view the serial number on Specification Line® refrigerators or freezers, lift the stainless steel panel above the doors. The serial number is located on the right side of the MCII Tempatrol®.

On heated storage units, the serial tag is located inside the right-most door (the only door on a one-door unit), near the top front corner of the right interior wall.

Always have the serial number of your unit available when calling for parts or service. A complete list of authorized Delfield parts depots is shown on the back cover of this manual.

REFRIGERANT NOTES



Specification Line® refrigerators use HCFC-22 refrigerant.



Specification Line® freezers manufactured after 1994 use HFC-404A refrigerant.

Delfield changed the refrigerant used in Specification Line® freezers in late 1994. These units will now use HFC-404A, replacing CFC-502 refrigerant, which was identified by the U.S. Environmental Protection Agency as harmful to the atmosphere. If the serial number on your unit is greater than 291282, your equipment uses HFC-404A. If you are uncertain, call the Customer Service department.

RECEIVING AND INSPECTING THE EQUIPMENT

Even though most equipment is shipped crated, care should be taken during unloading so the equipment is not damaged while being moved into the building.

Carefully check for any visible signs of damage to the cartons or containers. If evidence of damage exists, the package should be opened immediately and a joint inventory and examination of the contents should be made by you and the driver.

Concealed damage

If a concealed loss or damage is discovered after you have given the carrier a clear delivery receipt, **notify the carrier in writing immediately or within 10 days from the delivery date.** If you phone the carrier, you must follow up the call in writing to protect your rights. You can only improve your position as a claimant by promptly reporting such loss or damage. You should also **retain all cartons or containers, including packing material,** until an inspection has been made or waived.

Filing a claim

Notation of loss or damage does not constitute the filing of a claim. You should file your claim **in writing** with the carrier immediately!

Carriers will furnish the necessary form upon request. You should also request an inspection. If a claim is filed by phone, always follow up immediately in writing.

SPECIFICATIONS—REACH-INS & PASS-THROUGHS

Solid door reach-in refrigerators

MODEL NUMBER	DELFIELD PART NO.	H.P.	VOLTAGE (60 HZ/1 PHASE)	AMPS	NEMA PLUG
SLR25-S	037-0400	1/5	115	8.0	5-15P
SLR29-S	037-0000	1/2	115	12.0	5-15P
SLR48-S	037-0401	1/3	115	10.0	5-15P
SLR56-S	037-0021	1/2	115	12.0	5-15P
SLR72-S	037-0402	1/2	115	12.0	5-15P
SLR84-S	037-0042	3/4	115/208-230	16.0	◢HW
SLR29MD-S	037-0406	1/5	115	8.0	5-15P
SLR56MD-S	037-0407	1/3	115	10.0	5-15P

◢HW *Unit must be hard-wired*

Glass door reach-in refrigerators

MODEL NUMBER	DELFIELD PART NO.	H.P.	VOLTAGE (60 HZ/1 PHASE)	AMPS	NEMA PLUG
SLR29-G	037-0001	1/2	115	12.0	5-15P
SLR56-G	037-0022	3/4	115/208-230	16.0	◢HW
SLR84-G	037-0043	1	115/208-230	16.0	◢HW

◢HW *Unit must be hard-wired*

Solid door reach-in freezers

MODEL NUMBER	DELFIELD PART NO.	H.P.	VOLTAGE (60 HZ/1 PHASE)	AMPS	NEMA PLUG
SLF25-S	037-0403	1/2	115	12.0	5-15P
SLF29-S	037-0002	1/2	115	12.0	5-15P
SLF48-S	037-0404	1/2	115	12.0	5-15P
SLF56-S	037-0023	3/4	115	16.0	5-20P
SLF72-S	037-0405	3/4	115	16.0	5-20P
SLF84-S	037-0044	1	115/208-230	16.0	◢HW
SLF29MD-S	037-0408	1/2	115	12.0	5-15P
SLF56MD-S	037-0409	1/2	115	12.0	5-15P

◢HW *Unit must be hard-wired*

Glass door reach-in freezers

MODEL NUMBER	DELFIELD PART NO.	H.P.	VOLTAGE (60 HZ/1 PHASE)	AMPS	NEMA PLUG
SLF29-G	037-0003	3/4	115	16.0	5-20 P
SLF56-G	037-0024	1 1/2	115/208-230	16.0	◢HW
SLF84-GR	037-0045	◢RC	115/208-230	16.0	◢HW

◢HW *Unit must be hard-wired*
◢RC *Unit is not self-contained and requires a remote condensing unit*

Solid door reach-in refrigerator/freezer combinations

MODEL NUMBER	DELFIELD PART NO.	H.P.	VOLTAGE (60 HZ/1 PHASE)	AMPS	NEMA PLUG
SLR/F25-SH	037-0410	1/2	115	12.0	5-15P
SLR/F29-HS	037-0100	1/2	115	12.0	5-15P
SLR/F56-S	037-0104	3/4	115	16.0	5-20P
SLR/F84-S	037-0106	1	115/208-230	16.0	◢HW
SLF/R84-S	037-0107	1	115/208-230	16.0	◢HW
SLR/F29MD-SH	037-0411	1/2	115	12.0	5-15P

-SH *solid half-size doors*

◢HW *Unit must be hard-wired*

Solid door reach-in heated storage units

MODEL NUMBER	DELFIELD PART NO.	KILOWATTS	VOLTAGE (60 HZ/1 PHASE)	AMPS (208V–230V)
SLH29-S	037-0006	1.6–2.0	115/208-230	8.0–9.0
SLH56-S	037-0027	3.3–4.0	115/208-230	16.0–18.0
SLH84-S	037-0048	4.9–6.0	115/208-230	24.0–26.0

Glass door reach-in heated storage units

MODEL NUMBER	DELFIELD PART NO.	KILOWATTS	VOLTAGE (60 HZ/1 PHASE)	AMPS (208V–230V)
SLH29-G	037-0007	1.6–2.0	115/208-230	8.0–9.0
SLH56-G	037-0028	3.3–4.0	115/208-230	16.0–18.0
SLH84-G	037-0049	4.9–6.0	115/208-230	24.0–26.0

Solid and glass door pass-through refrigerators

MODEL NUMBER	DELFIELD PART NO.	H.P.	VOLTAGE (60 HZ/1 PHASE)	AMPS	NEMA PLUG
SLRPT29-SS	037-0004	1/2	115	12.0	5-15P
SLRPT56-SS	037-0025	1/2	115	12.0	5-15P
SLRPT84-SS	037-0046	3/4	115/208-230	16.0	◢HW
SLRPT29-GS	037-0083	1/2	115	12.0	5-15P
SLRPT56-GS	037-0084	3/4	115/208-230	16.0	◢HW
SLRPT84-GSR	037-0091	◢RC	115	12.0	◢HW
SLRPT29-GG	037-0035	1/2	115	12.0	5-15P
SLRPT56-GG	037-0026	1	115/208-230	16.0	◢HW
SLRPT84-GGR	037-0047	◢RC	115	16.0	◢HW

-SS *solid door(s) both sides*
-GS *glass door(s) one side*
-GG *glass door(s) both sides*

◢HW *Unit must be hard-wired*
◢RC *Unit is not self-contained and requires a remote condensing unit*

Solid and glass door pass-through heated storage units

MODEL NUMBER	DELFIELD PART NO.	KILOWATTS	VOLTAGE (60 HZ/1 PHASE)	AMPS (208V–230V)
SLHPT29-SS	037-0008	1.6–2.0	115/208-230	8.0–9.0
SLHPT56-SS	037-0029	3.3–4.0	115/208-230	16.0–18.0
SLHPT84-SS	037-0050	4.9–6.0	115/208-230	24.0–26.0
SLHPT29-GS	037-0010	1.6–2.0	115/208-230	8.0–9.0
SLHPT56-GS	037-0031	3.3–4.0	115/208-230	16.0–18.0
SLHPT84-GS	037-0159	4.9–6.0	115/208-230	24.0–26.0
SLHPT29-GG	037-0009	1.6–2.0	115/208-230	8.0–9.0
SLHPT56-GG	037-0030	3.3–4.0	115/208-230	16.0–18.0
SLHPT84-GG	037-0051	4.9–6.0	115/208-230	24.0–26.0

-SS *solid door(s) both sides*
-GS *glass door(s) one side*
-GG *glass door(s) both sides*

This manual ©1991–1995 The Delfield Company. All rights reserved. Reproduction without written permission is prohibited.

The starburst "1" symbol is a trademark and Delfield, Specification Line and MCII Tempatrol are registered trademarks of The Delfield Company.

SPECIFICATIONS—ROLL-INS & ROLL-THROUGHS

Solid door roll-in refrigerators

MODEL NUMBER	DELFIELD PART NO.	H.P.	VOLTAGE (60 HZ/1 PHASE)	AMPS	MIN. CIRCUIT AMPS
SLRRI34-S	037-0011	1/2	115	12.0	15.0
SLRRI66-S	037-0032	1/2	115	12.0	15.0
SLRRI99-S	037-0053	3/4	115/208-230	16.0	20.0

All units must be hard-wired

Glass door roll-in refrigerators

MODEL NUMBER	DELFIELD PART NO.	H.P.	VOLTAGE (60 HZ/1 PHASE)	AMPS	MIN. CIRCUIT AMPS
SLRRI34-G	037-0012	1/2	115	12.0	15.0
SLRRI66-G	037-0033	3/4	115/208-230	16.0	20.0
SLRRI99-GR	037-0054	◢RC	115	10.0	15.0

All units must be hard-wired
◢RC *Unit is not self-contained and requires a remote condensing unit*

Solid door roll-in freezers

MODEL NUMBER	DELFIELD PART NO.	H.P.	VOLTAGE (60 HZ/1 PHASE)	AMPS	MIN. CIRCUIT AMPS
SLFRI34-S	037-0013	1/2	115	12.0	15.0
SLFRI66-S	037-0034	1	115/208-230	16.0	20.0
SLFRI99-S	037-0055	1 1/2	115/208-230	16.0	20.0

All units must be hard-wired

Glass door roll-in freezers

MODEL NUMBER	DELFIELD PART NO.	H.P.	VOLTAGE (60 HZ/1 PHASE)	AMPS	MIN. CIRCUIT AMPS
SLFRI34-G	037-0014	3/4	115	16.0	20.0
SLFRI66-G	037-0035	1 1/2	115/208-230	16.0	20.0
SLFRI99-GR	037-0056	◢RC	115/208-230	16.0	20.0

All units must be hard-wired
◢RC *Unit is not self-contained and requires a remote condensing unit*

Solid door roll-in heated storage units

MODEL NUMBER	DELFIELD PART NO.	KILOWATTS	VOLTAGE (60 HZ/1 PHASE)	AMPS (208V–230V)
SLHRI34-S	037-0017	1.6–2.0	115/208-230	8.0–9.0
SLHRI66-S	037-0038	3.3–4.0	115/208-230	16.0–18.0
SLHRI99-S	037-0059	4.9–6.0	115/208-230	24.0–26.0

Glass door roll-in heated storage units

MODEL NUMBER	DELFIELD PART NO.	KILOWATTS	VOLTAGE (60 HZ/1 PHASE)	AMPS (208V–230V)
SLHRI34-G	037-0018	1.6–2.0	115/208-230	8.0–9.0
SLHRI66-G	037-0039	3.3–4.0	115/208-230	16.0–18.0
SLHRI99-G	037-0060	4.9–6.0	115/208-230	24.0–26.0

Solid and glass door roll-through refrigerators

MODEL NUMBER	DELFIELD PART NO.	H.P.	VOLTAGE (60 HZ/1 PHASE)	AMPS	MIN. CIRCUIT AMPS
SLRRT34-SS	037-0015	1/2	115	12.0	15.0
SLRRT66-SS	037-0036	1/2	115	12.0	15.0
SLRRT99-SS	037-0057	3/4	115/208-230	16.0	20.0
SLRRT34-GS	037-0088	1/2	115	12.0	15.0
SLRRT66-GS	037-0089	3/4	115/208-230	16.0	20.0
SLRRT99-GSR	037-0095	◢RC	115	12.0	15.0
SLRRT34-GG	037-0016	1/2	115	12.0	15.0
SLRRT66-GGR	037-0037	◢RC	115	12.0	15.0
SLRRT99-GGR	037-0058	◢RC	115	16.0	20.0

-SS *solid door(s) both sides*
-GS *glass door(s) one side*
-GG *glass door(s) both sides*

All units must be hard-wired
◢RC *Unit is not self-contained and requires a remote condensing unit*

Solid and glass door pass-through heated storage units

MODEL NUMBER	DELFIELD PART NO.	KILOWATTS	VOLTAGE (60 HZ/1 PHASE)	AMPS (208V–230V)
SLHRT34-SS	037-0019	1.6–2.0	115/208-230	8.0–9.0
SLHRT66-SS	037-0040	3.3–4.0	115/208-230	16.0–18.0
SLHRT99-SS	037-0061	4.9–6.0	115/208-230	24.0–26.0
SLHRT34-GS	037-0121	1.6–2.0	115/208-230	8.0–9.0
SLHRT66-GS	037-0122	3.3–4.0	115/208-230	16.0–18.0
SLHRT99-GS	037-0123	4.9–6.0	115/208-230	24.0–26.0
SLHRT34-GG	037-0020	1.6–2.0	115/208-230	8.0–9.0
SLHRT66-GG	037-0041	3.3–4.0	115/208-230	16.0–18.0
SLHRT99-GG	037-0052	4.9–6.0	115/208-230	24.0–26.0

-SS *solid door(s) both sides*
-GS *glass door(s) one side*
-GG *glass door(s) both sides*

Location

Be sure the location chosen has a floor strong enough to support the total weight of the cabinet and contents. Allow for a total load of approximately 1000 pounds (450 kg) per door section. Reinforce the floor if necessary to provide for maximum loading.

For the most efficient operation, be sure to provide good air circulation inside and out.

Inside cabinet: Do not pack the equipment so full that air cannot circulate. Take care not to block air flow to the fans or heating elements and allow space along the sides.

Outside cabinet: Be sure that the unit has access to ample air; avoid hot corners and locations near stoves and ovens. Always provide a minimum of 12 inches (30.5 cm) of clearance above the unit that is open to the front.

All units are shipped with special skid pads attached to the bottom. The skid pads are designed to make the unit easier to slide into place. This is sometimes necessary to get the unit through areas with little clearance.

If the doors need to be removed during installation:



1. If you are removing a glass door, unscrew and unplug the cross-over cords from the door to the cabinet.
2. Remove the door by lifting it up and easing it out of the hinge brackets.

Reverse this procedure to put doors back into place.

To remove the shroud:

1. Lift the shroud from the bottom until the prop bars hold it open.
2. Remove the pull pins, located behind the shroud sides, from the prop bars .
3. Continue to raise the shroud from bottom until the prop rods fall from the shroud sides.
4. Lift the shroud until it is free of the unit.

Reverse this procedure to put the shroud back into place.

It may take more than one person to remove a shroud safely. Shrouds can be heavy and awkward, particularly on two- or three-door units.

Leveling

A level cabinet looks better and will perform better because the doors will line up with the door frames properly, and the cabinet will not be subject to unnecessary strain.

Stabilizing

Most models are supplied with adjustable legs.

It is very important that all legs are properly adjusted to keep the unit level, evenly distribute the weight and to make sure the unit will not rock, lean or be unstable.

Some models may be provided with optional casters, for ease of cleaning or portable use.

The cabinet must be installed in a stable condition with casters locked when unit is in use.



Large cabinets should always be moved with extreme care and caution.

Electrical connection



Refer to the amperage data on pages 3–4 or the serial tag data and your local code or the National Electrical Code to be sure the unit is connected to the proper power source. A protected circuit of the correct voltage and amperage must be run for connection of the supply cord or permanent connection to the unit.

The power should be turned off and disconnected whenever performing maintenance or repair functions!

Location

Specification Line roll-in and roll-through models may be installed in one of two methods, either surface-mounted or flush-mounted. See the appropriate section following these general instructions for specific procedures.

Be sure the location chosen has a floor strong enough to support the total weight of the cabinet and contents. Allow for a total load of approximately 1000 pounds (450 kg) per door section. Reinforce the floor if necessary to provide for maximum loading. Also, a minimum of 1" (2.5 cm) of cork insulation (or equivalent) should be installed under the unit. See the specific unit installation instructions which follow.

For the most efficient operation, be sure to provide good air circulation inside and out.

Inside cabinet: Do not pack the equipment so full that air cannot circulate. Take care not to block air flow to the fans or heating elements and allow space along the sides.

Outside cabinet: Be sure that the unit has access to ample air; avoid hot corners and locations near stoves and ovens. Always provide a minimum of 12" (30.5 cm) of clearance above the unit that is open to the front.

Leveling

A level cabinet looks better and will perform better because the doors will line up with the door frames properly, and the cabinet will not be subject to unnecessary strain.

Unit installation—surface mounted



Large cabinets should always be moved with extreme care and caution.

The surface mounting installation method uses stainless steel ramps to allow entry into the cabinet (1 ramp provided with roll-in models, 2 with roll-through models).



1. Install a minimum of 1" (2.5 cm) of cork insulation (or equivalent) in the space under the unit. The insulation should be recessed as shown in Figure 1.
2. Set the unit in place and seal to the floor.
3. Install ramp(s) as illustrated in Figure 6-1. On refrigerators or freezers, when the ramps are properly installed, heat from the heater wire will be transferred to the ramp to prevent condensation.

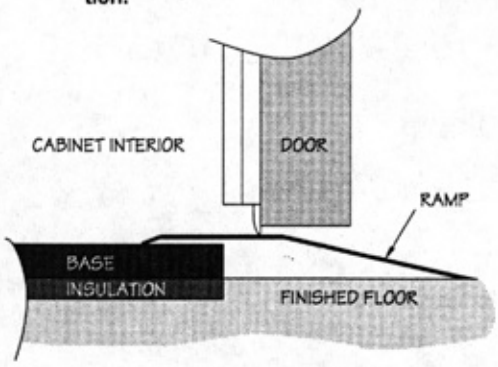

Figure 6-1—Surface mounted installation

Unit installation—flush mounted

CAUTION

Large cabinets should always be moved with extreme care and caution.

The flush mounting installation method is accomplished by designing the floor (or removing flooring if the unit is to mounted in an existing floor) to allow a 2⅛" (5.4 cm) recess under the unit (see Figure 2). Ramp(s) are not used in this installation; instead, special flush mount thresholds are used.

If the unit was not specified to be flush mounted when it was ordered, ramps will have been provided. Contact Delfield to obtain the proper threshold parts and complete information on how to install the unit with a flush mounting.

STEPS

1. After providing the required 2¡" (5.4 cm) recess, place 1" (2.5 cm) of cork insulation (or equivalent) into the recess. If more insulation is used, adjust the depth of the recess accordingly.
2. Set the unit in place and seal to the floor.
3. Install threshold(s) as illustrated in Figure 7-1.

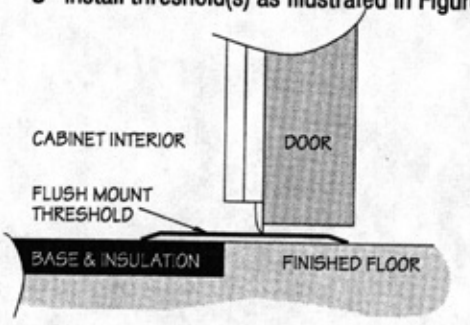

Figure 7-1—Flush mounted installation.

Door installation

If the doors need to be removed during installation:

STEPS

1. Unscrew and unplug the cross-over cords from the door to the cabinet.
2. Remove the door by lifting it up and easing it out of the hinge brackets.

Reverse this procedure to replace the doors.

Shroud installation

To remove the shroud:

STEPS

1. Lift the shroud from the bottom until the prop bars hold it open.
2. Remove the pull pins, located behind the shroud sides, from the prop bars .
3. Continue to raise the shroud from bottom until the prop rods fall from the shroud sides.
4. Lift the shroud until it is free of the unit.

Reverse this procedure to put the shroud back into place.

CAUTION

It may take more than one person to remove a shroud safely. Shrouds can be heavy and awkward, particularly on two- or three-door units.

Electrical connection

DANGER

Refer to the amperage data on pages 3–4 or the serial tag data and your local code or the National Electrical Code to be sure the unit is connected to the proper power source. A protected circuit of the correct voltage and amperage must be run for connection of the supply cord or permanent connection to the unit.

The power should be turned off and disconnected whenever performing maintenance or repair functions!

BASIC OPERATION—REFRIGERATORS & FREEZERS

After plugging the unit in and turning the power switch to **ON**, the unit will operate immediately upon start without any programming of the MCII Tempatrol® required. The freezer temperature is preset to 0°F and the refrigerator is preset to 37°F. NOTE: The MCII Tempatrol has a built-in differential; with the doors closed and the temperature stabilized, the actual interior temperature will be up to 3°F lower than the set point.

When the unit is started, the digital display will flash, and will continue flashing if the interior cabinet temperature is over the set temperature range. When the unit is restarted after a power interruption, the digital display will flash only if the interior cabinet temperature is over the set temperature range.

In either case, when the cabinet is cooled to the set temperature range, the display will stop flashing.

Every time the unit is started or restarted, the clock must be set to the correct time of day if a custom defrost plan has been previously entered into the MCII Tempatrol. Otherwise, the clock will resume at the time when the power was interrupted.

More details on the operation of the MCII Tempatrol are on pages 10–18.

BASIC OPERATION—HEATED STORAGE CABINETS



1. Lift the shroud from the bottom until the prop bars hold it open.
2. Turn the main power switch, located on top of the control compartment, to the **ON** position. The digital display will turn on.
3. Adjust the temperature control to the desired temperature.

The green area on the scale represents the optimum food holding temperature zone of 150°F to 170°F (66°C to 77°C). When the cabinet is warmed up and the temperature stabilized, the cabinet temperature will normally stay within a few degrees of the temperature control set point. The display shows a precise measurement of the actual air temperature within the cabinet, not an average reading. Therefore, it is not unusual to see the temperatures vary when the doors are opened. The quick response of the heating system combined with the precision temperature readings provide very accurate control of the cabinet temperature.

4. Set the circulating fan switch to the desired position. Turn the fan **ON** to achieve optimum heat distribution, or **OFF** when minimal dehydration of the food product is desired.
5. The light switch (on glass door models only) controls the display lights inside the cabinet.
6. The vent located on the top of the unit is used to regulate humidity levels inside the cabinet. Adjust the vent by rotating the top cover clockwise to close and counter-clockwise to open.



The vent cover is extremely hot while the unit is operating! Be careful when touching the cover, and avoid possible hot air or steam that may escape from the unit when the cover is opened.

7. Release the prop bars and lower the shroud back into place.

The unit is now operating and the display will continually show the current interior cabinet temperature. The main power switch may be accessed through the slot in the shroud and if no further temperature adjustments are required, the unit may be turned on and off without raising the shroud.





The cabinet interior is very hot! Avoid direct contact with skin; use appropriate protective apparel, such as gloves. The area near the heating elements will be hotter than the rest of the cabinet. Maintain at least 1" (2.5 cm) air space around the heaters and guards. Never operate the unit without the guards in place. Use only containers and materials suitable for high temperature applications. Never store combustible materials near the heating appliance.



The power should be turned off and disconnected whenever performing maintenance or repair functions!





The interior of heated storage cabinets will be hot for some time after the power is turned off. Avoid touching the interior walls and heater guards with bare hands or arms until you are certain the unit has cooled. The use of gloves is recommended.

The interior and exterior can be cleaned using soap and warm water. If this isn't sufficient, try ammonia and water or a nonabrasive liquid cleaner. When cleaning the exterior, always rub with the "grain" of the stainless steel to avoid marring the finish.

Do not use an abrasive cleaner because it will scratch the stainless steel and plastic, and can damage the breaker strips and gaskets.

Door gaskets should be cleaned as required to maintain their ability to seal properly. Do not use sharp tools or knives to scrape the bellows as this may tear the gasket and eliminate its ability to seal. A bristle brush and solution of soap and water will keep the gaskets clean. Do not use full strength de-greasing agents on the gasket.

Refrigerators & freezers

In order to maintain proper refrigeration performance, the condenser fins must be cleaned of dust, dirt, and grease regularly. It is recommended that this be done at least every three months. If conditions are such that the condenser is totally blocked in three months, the frequency of cleaning should be increased. Clean the condenser with a vacuum cleaner or stiff brush. If extremely dirty, a commercially available condenser cleaner may be required.

If your freezer seems to vibrate excessively when the compressor is running, loosen (but do not remove) the bolts on the compressor.

Peristaltic pump tube inspection & replacement

Refrigerators and freezers use a peristaltic pump. The pump transfers water from the evaporator coil up to the condensation pan near the condensing unit. The pump is self-priming and can run dry without damage. On freezers, the pump runs only when defrosting. On refrigerators, the pump will start with the condensing unit and run for approximately 30 seconds, controlled by a timer.

Contact Delfield before attempting to make any adjustments to the timer.



When checking the pump, make sure the water drain tube is making contact with the drain pan.

Periodic inspection of the peristaltic pump tubing is necessary for optimum operation of your refrigerator or freezer. Inspect all tubing regularly, and replace if deteriorated.



Before replacing the tubing, disconnect power to the unit. If the power is left on, the pump may start, possibly causing pinching or other injury to fingers.

1. Disconnect the power to the unit.
2. Disconnect the suction and discharge tubing from the pump tubing.
3. Remove the four screws and the pump cover.
4. Remove the old pump tubing and discard.
5. Clean the roller race, removing any particles that might damage the new tubing.
6. Position the roller racket assembly as shown in Figure 9-1.

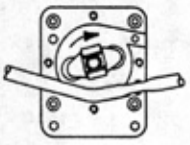

Figure 9-1

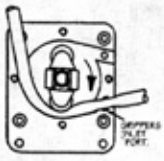

Figure 9-2

7. Push the new pump tubing into the inlet port, anchoring the tubing in the grippers as shown in Figure 9-2, while rotating the bracket assembly.
8. Continue to rotate the bracket assembly, pushing the tubing into the roller race (Figure 9-3).

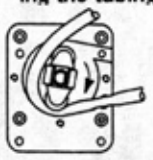

Figure 9-3

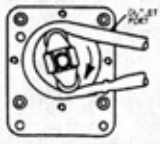

Figure 9-4

9. Finally, insert the pump tubing into the outer port as shown in Figure 9-4. Replace the outer cover and screws, and reconnect the suction and discharge tubing to the pump tubing.

Heated storage cabinets

The heater guards on heated cabinets are removable for cleaning. When the guard is sufficiently cool, raise it straight up to release it from its support pins and pull it away from the side of the cabinet. Reverse this procedure to re-install the guard.

Never operate a heated cabinet without all heater guards in place!

MCII TEMPATROL® CONTROLS

NOTE: This manual covers units with the MC1 Tempatol® and its successor, MCII Tempatrol® The basic operation o f the MCII is the same as the MC1; Delfield has incorporated international symbols for your use. See the illustrations below for the similarities between the two controls.





RESET

- Turns off alarms
- Terminates the current defrost cycle
- Returns display to cabinet temperature

TIME

- Displays the current time (if set)
- Allows setting the clock by pressing **UP** and **DOWN** buttons
- Starts a manual defrost cycle when pressed simultaneously with **DEFROST**

DEFROST

- Displays current defrost setting (A,3,4,6 or 8)
- Allows setting defrost setting and times by pressing **UP** and **DOWN** buttons
- Starts a manual defrost cycle when pressed simultaneously with **TIME**

TEMP(SETPOINT)

- Displays current temperature set point
- Allows modification of set point by pressing **UP** and **DOWN** buttons

UP

- When time is displayed, changes time forward
- When defrost setting is displayed, moves forward through choices
- When first defrost time is displayed, moves the hour forward
- When set point is displayed, moves set point up one degree

DOWN

- When time is displayed, changes time backward
- When defrost setting is displayed, moves backward through choices
- When first defrost time is displayed, moves the hour backward
- When set point is displayed, moves set point down one degree

Normal display

The normal display is the interior cabinet temperature in degrees Fahrenheit. (For details on changing the display to show the temperature in degrees Celsius, see page 15.) Pressing the **RESET** button always displays current temperature. By pressing **TEMP**, you can read the set point of the interior cabinet. The display will automatically return to the current interior temperature after one minute.

It is not unusual for the interior temperature to rise rapidly when a door is opened. The temperature displayed is usually the warmest temperature inside the unit. This is done purposely to make sure that the entire storage area is always represented by the display and assures that the refrigeration system is activated quickly to return the storage area to its correct temperature.

Remember that the temperature displayed represents a precision measurement of the actual air temperature, not an average temperature. When a door is opened, the cold air literally "falls out" and warm air rushes in. What the display shows is real, and provides more accurate control.

Flashing temperature display

A flashing temperature display can be caused by four situations, and is the first signal of a possible problem:

STEPS

1. The unit has been started, or restarted after a power loss, and has not yet reached set temperature.
2. The interior cabinet is over temperature. This occurs when a freezer reaches 32°F (0°C) or when a refrigerator reaches 65°F (18°C). This condition will stop when the temperature returns to a reading below these warning levels.
3. Long duty cycle. The unit has been running for one continuous hour without a door being opened. This condition will stop if **RESET** is pressed, a door is opened, or if the compressor shuts off.
4. The door has been ajar for over one minute. This condition will stop if the door is closed.



Door ajar

The **DOOR AJAR** indicator light will come on when a door is opened. If the door remains open for more than one minute, the temperature display will begin to flash. After three minutes, a loud beep is emitted every three seconds. The flashing display and warning beep will stop when **RESET** is pressed. If the door is not closed when **RESET** is pressed, the same cycle will repeat.



Clean condenser

The **CLEAN CONDENSER** indicator light is a maintenance reminder that comes on every 90 days. It will go off when the **RESET** button is pressed.



Defrost

The **DEFROST** indicator light comes on during defrosting cycles. The defrost cycle may be terminated by pressing the **RESET** button. Warmer interior cabinet temperatures are normal during and after defrosting.

continued on page 12

MCII TEMPATROL® DISPLAY FUNCTIONS (continued)



Check system

The **CHECK SYSTEM** indicator light comes on when a significant malfunction of the unit has occurred, such as an incomplete defrost, continuous compressor operation with accompanying over-temperature condition, or sensor failure. After 2½ hours in this condition, a loud warning beep is emitted every second. The beep will stop if **RESET** is pressed.



Clock display

Setting the **CLOCK** is not essential to operation unless custom defrost times have been set on freezer units and while not in automatic (A) mode. If the power is interrupted, the clock may have to be reset for correct custom defrost timing.

MCII TEMPATROL® PROGRAMMING

Setting the clock

To set the clock, perform the following steps:

STEPS

1 Press **RESET** to clear the flashing display; this must be done to make the rest of the keypad functional.



2 Press the **TIME** button to show current time (set to 12:00 a.m. when started or restarted).

3 Press **UP** or **DOWN** to set the correct time. Note the AM and PM indicators at the left of the clock display.

4 Press **RESET** to return to interior cabinet temperature display.

If the defrost cycle starts while the clock is being set, stop pressing the **UP** or **DOWN** button and wait a couple of seconds before continuing. This will help to keep the time display advancing quickly.

Setting defrost cycles

Setting defrost cycles on freezer units is done via the MCII Tempatrol. The automatic defrost cycle is preprogrammed at the factory, and no adjustment is needed to use the unit with this setting. A custom defrost cycle for freezers can be programmed if desired. For information on how to determine the proper defrost setting for your application, see page 14.

Refrigerators defrost automatically; no adjustment is needed.

Follow these steps to set or change the defrost cycle:

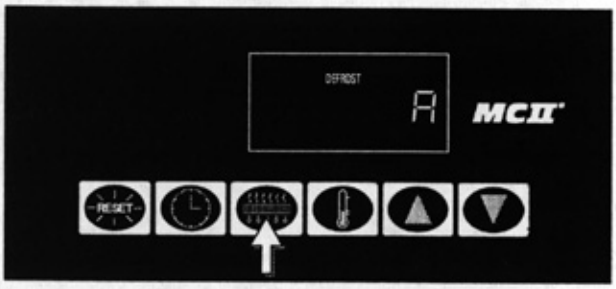

STEPS

1 Press **DEFROST**. The current defrost setting (A, 3, 4, 6 or 8) will be displayed. "A" indicates the automatic "demand" defrost cycle; 3 through 8 indicate the number of defrost cycles per 24 hours.

continued on page 13

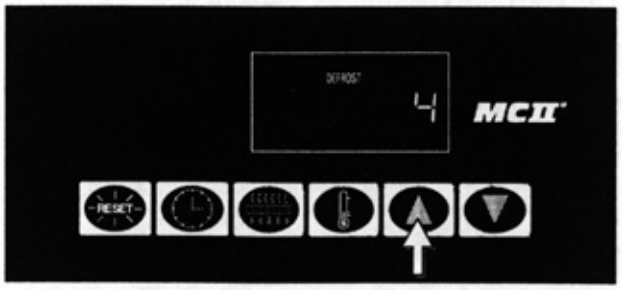

2 Press **UP** or **DOWN** until desired setting appears in the display.



3 Press **DEFROST** again. If you selected automatic (A) mode, the display will return to the interior temperature reading. If you selected 3, 4, 6 or 8, however, the time of the first defrost is shown.



4 Press **UP** or **DOWN** to set the hour of the first defrost cycle. Other defrosts will then be spaced evenly over each 24-hour period, as determined by the number of cycles selected.

5 Press **RESET** to return display to interior temperature reading.

Setting the temperature set point

Setting the temperature set point is also accomplished using the MCII Tempatrol. The recommended storage temperature for freezers is 0°F to –5°F (–18°C to –21°C); the set point is preprogrammed at the factory at 0°F (–18°C). The recommended storage temperature for refrigerators is 35°F to 40°F (2°C to 4°C); the set point is preprogrammed at the factory at 37°F (3°C). If other ranges are selected and set, they must be suitable for all products being stored in the unit.

STEPS

1 Press **RESET** to display interior cabinet temperature, if not already shown.



2 Press **TEMP** to display the current set point.

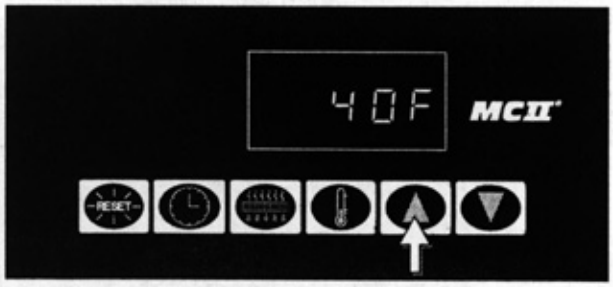

3 Press **UP** or **DOWN** to select the desired new set point. Refrigerators are designed to maintain an interior temperature of 34°F to 45°F (1°C to 7°C); freezers are designed to maintain an interior temperature of –5°F to 10°F (–21°C to –12°C).

4 Press **RESET**.

Refrigerators

Refrigerators automatically defrost, using a special defrost program in the MCII Tempatrol®. A refrigerator will defrost whenever the MCII Tempatrol detects poor unit efficiency.

A refrigerator defrost will rarely occur. However, under certain conditions, a defrost may be needed to assure optimum performance. Defrost cycles will occur more frequently at interior temperature settings of 34°F (1°C) or less. Frequent defrosts may also occur when room temperatures are unusually high.

Refrigerator defrosts cannot be adjusted; however, pressing the **RESET** *button will terminate the current defrost cycle on either a refrigerator or a freezer.*

Freezers

On freezers, an automatic (**A**) defrost cycle has been preset at the factory; custom defrost cycles may be set by the user. The last defrost program is always kept in the MCII Tempatrol's memory, even if power is lost. Correct setting of the clock is essential if a custom defrost cycle is set.

Custom defrost cycles

When programming the custom defrost cycles, the display will offer a choice of **A, 3, 4, 6** or **8**. The following chart has guidelines on selecting the proper setting.

DEFROST SETTING	USAGE LEVEL	FREQUENCY OF DOOR OPENINGS	DEFROST TIMING
A	Variable	Varies during the day	Automatic; as needed
3	Light	8 to 10 times per day	Every 8 hours
4	Average	About once per hour	Every 6 hours
6	Heavy	Two or three times per hour	Every 4 hours
8	Very heavy	Several times per hour	Every 3 hours

More defrosts should be added in high humidity environments.

Based on your selection, enter a time for the first defrost so that it, and all subsequent defrosts, occur at suitable times.

Example

Matt's Diner wants to avoid defrost cycles during the peak business hours around 7:00 a.m., noon and 5:00 p.m. The freezer is used heavily during these periods, but the rest of the day is "normal". The humidity in the diner is high, however. Therefore, we estimate that four defrosts are needed each day, and they will occur every six hours.

To avoid the 7:00 a.m. rush, the first defrost time will be set at 8:00 a.m. in this example. Subsequent defrosts then occur at 2:00 p.m., 8:00 p.m. and 2:00 a.m., thereby missing all the rush periods.

The first defrost should be set to follow the period of heaviest usage during the day.

For additional instructions on using the MCII Tempatrol to set a custom defrost cycle, see page 12.

Automatic defrost cycles

If the automatic (**A**) or "demand" defrost mode is selected, the MCII Tempatrol will monitor usage and efficiency of the unit, and will then defrost automatically only when needed. This setting is recommended for all applications when the time of each defrost is not important. In automatic (A) mode, it is possible for light duty units to operate for several days without defrosting.

By eliminating unnecessary defrosting, significant energy savings can be realized, and fewer defrosts also lead to more constant temperature control and longer product life.

The automatic defrost mode is not recommended when the number of door openings per hour exceeds three.

For additional instructions on using the MCII Tempatrol to set the automatic (**A**) defrost cycle, see page 12.

Manual defrost cycles

A manual defrost cycle can be initiated at any time by pressing the **DEFROST** and **TIME** buttons simultaneously. The defrost can be terminated by pressing **RESET**.

Changing the temperature scale

The temperature display can read in degrees Fahrenheit (default setting) or Celsius (International System). To change scales, follow these steps:



1. Press the **TIME** and **DOWN** buttons simultaneously, then press the **TEMP** button.
2. Press the **DEFROST** button. The condensing unit will shut off, and the display will read **000**.
3. Hold the **TIME** button, and press **UP** or **DOWN** until the display shows **C** for Celsius, or **F** for Fahrenheit.
4. Release the **TIME** button. The display will blink to indicate the command has been executed.
5. Press **RESET**. The condensing unit will restart, and the display will return to the cabinet temperature, now displayed in the new temperature scale.

Locking control settings

You can lock the control settings so that they cannot be changed without knowing how to unlock them. This will prevent unsupervised changes to the set point or defrost cycles.



1. Press the **TIME** and **DOWN** buttons simultaneously, then press the **TEMP** button.
2. Press the **DEFROST** button. The condensing unit will shut off, and the display will read **000**.
3. Press **UP** until the display reads **009**.
4. Hold the **TIME** button, and press **UP** or **DOWN** until the display shows **L** for locked, or **U** for unlocked.
5. Release the **TIME** button. The display will blink to indicate the command has been executed.
6. Press **RESET**. The condensing unit will restart, and the display will return to the cabinet temperature. No control settings can be changed until the locking procedure is reversed.

Over temperature alarms

You can select when the over temperature alarm will sound. The following settings are available:

- **0:01** Alarm sounds when unit is over set point for 60 minutes (default setting)
- **0:02** Alarm sounds when the unit is 5°F (3°C) over set point.
- **0:03** Alarm sounds when the unit is 10°F (6°C) over set point.
- **0:04** Alarm sounds when the unit is 15°F (8°C) over set point.



1. Press the **TIME** and **DOWN** buttons simultaneously, then press press the **TEMP** button.
2. Press the **DEFROST** button. The condensing unit will shut off, and the display will read **000**.
3. Press **UP** until the display reads **010**.
4. Hold the **TIME** button, and press **UP** or **DOWN** until the display shows the desired setting from the chart above.
5. Release the **TIME** button. The display will blink to indicate the command has been executed.
6. Press **RESET**. The condensing unit will restart, and the display will return to the cabinet temperature.

Power up display

When the unit is restarted, you can choose to have the normal temperature display appear (option **0:01**), a flashing temperature display for 3 seconds (option **0:02**) or a flashing clock display for 3 seconds (option **0:03**). The flashing displays may help remind you to check the defrost, set point or clock settings after a power interruption.



1. Press the **TIME** and **DOWN** buttons simultaneously, then press the **TEMP** button.
2. Press the **DEFROST** button. The condensing unit will shut off, and the display will read **000**.
3. Press **UP** until the display reads **011**.
4. Hold the **TIME** button, and press **UP** or **DOWN** until the display shows the desired setting.
5. Release the **TIME** button. The display will blink to indicate the command has been executed.
6. Press **RESET**. The condensing unit will restart, and the display will return to the cabinet temperature.

continued on page 16

MCII TEMPATROL® OPTIONAL SETTINGS (continued)

Set point differential tolerance

The unit is set at the factory to hold the programmed set point to within plus or minus 3°F (2°C), which is default option **0:01**. Depending on the alarm setting you have selected, the alarm will sound when the cabinet temperature is outside that range. You may change the differential tolerance to 2°F (1°C) by selecting option **0:02**, or 1°F (0.5°C) by selecting option **0:03**.



1. Press the **TIME** and **DOWN** buttons simultaneously, then press the **TEMP** button.
2. Press the **DEFROST** button. The condensing unit will shut off, and the display will read **000**.
3. Press **UP** until the display reads **013**.
4. Hold the **TIME** button, and press **UP** or **DOWN** until the display shows the desired setting.
5. Release the **TIME** button. The display will blink to indicate the command has been executed.
6. Press **RESET**. The condensing unit will restart, and the display will return to the cabinet temperature.

Other programmable options

There are many other options accessible through the MCII Tempatrol; these should be left to qualified service personnel, however. For information on accessing the MCII Tempatrol's self-diagnostic mode, see the next section.

MCII TEMPATROL® SELF-DIAGNOSTIC SYSTEM

Check system indications



Whenever a CHECK SYSTEM indication appears, a potentially serious problem has occurred. Appropriate action should be taken immediately to ensure proper product temperature is maintained. A qualified service agent should be called whenever a serious problem has occurred.

You may be able to speed up the repair process, however, by noting the diagnostic codes provided on the digital display by the MCII when a problem occurs.

Using the diagnostic mode

Using the following instructions, enter the diagnostic mode and write down the codes to give to your service agent.



1. To enter the diagnostic mode, press **DOWN** and **TIME** simultaneously, then press **TEMP**.
2. The diagnostic code numbers and **CHECK SYSTEM** indicator should appear. If there is more than one code number, the unit will display them one after another, repeating the sequence continuously. By using the chart provided on page 13, you can determine the problem area or areas to check.
3. To exit the diagnostic mode, press **RESET**. The **CHECK SYSTEM** indicator will go out unless there is a sensor problem. The **CHECK SYSTEM** indication will reappear in one hour if an over-temperature condition still exists.

The diagnostic codes are provided for information only; service should be left to qualified service agents only!

Clearing error codes

After the unit is repaired, the error code or codes must be erased from the MCII. Otherwise, they will be stored and any new errors will be added to the old list, making diagnosis of potential future problems difficult. Follow these steps to erase all error codes from the MCII:



1. Press the **TIME** and **DOWN** buttons simultaneously, then press the **TEMP** button.
2. Press the **DEFROST** button. The condensing unit will shut off, and the display will read **000**.
3. Press **UP** until the display reads **08**.
4. Press the **TIME** button. The display will blink to indicate the command has been executed.
5. Press **RESET**. The condensing unit will restart, and the display will return to the cabinet temperature.

MCII TEMPATROL® CHECK SYSTEM WARNINGS REFERENCE CHART

DISPLAY INDICATION	CAUSE	WHAT TO DO	WHAT TO CHECK
CHECK SYSTEM...			
a. with flashing temperature display	a. overtemp for over one hour with closed doors	**CHECK DIAGNOSTIC CODE**	Is the box overloaded with warm products? Is the evaporator clean? Is the condenser clean?
b. without flashing temperature display	b. incomplete defrost or other problem detected by MCII Tempatrol		The alarm may be silenced by pressing **RESET**, but the problem may still exist and set off the alarm again.
c. with flashing temperature display and beeping alarm	c. overtemp for over 2½ hours with closed doors		
d. with flashing temperature of -33°F and beeping alarm	d. sensor failure— unit cannot function and will not run		Call a qualified service agent.

MCII TEMPATROL® DIAGNOSTIC CODES REFERENCE CHART

CODE	CAUSE	WHAT TO DO
0	No problem exists	
1	Low evaporator temperature with high superheat, or *(freezers only)* low superheat with low temperature difference	Check evaporator for frost accumulation Check fans and evaporator air flow Check for frost back to compressor for overcharge Check for leaks Check for possible restriction in capillary tube and dirt or moisture in the system *NOTE: Evacuate and recharge after any corrective actions*
2	Low superheat with high temperature difference	Check evaporator fans Check for frost on the evaporator coil
3	No superheat with no temperature difference	Check if the compressor is running Check for refrigerant loss
4	Continuous operation with overtemp condition	Check refrigeration system and control system
5	*(Freezers only)* Defrost terminated on time backup	Check the defrost heater and drain Increase the number of defrosts per day
6	–33°F box sensor or sensor failure	Check wiring connections Repair or replace sensor
7	Microprocessor error	Check MCII Tempatrol control unit

DISCONNECT ALL POWER TO YOUR DELFIELD UNIT BEFORE REPAIRING OR REPLACING THE MICROPROCESSOR OR ANY OTHER MAINTENANCE OR REPAIR FUNCTION.

MCII TEMPATROL® DISPLAY REFERENCE CHART

ITEM	*METHOD OF CHECKING*	*NORMAL INDICATION*
Clock	Press **TIME**	Correct time (check **AM/PM** setting)
Defrost settings *(freezer units only)*	1. Press **DEFROST** 2. Press **DEFROST** again	1. **A, 3, 4, 6 or 8** 2. Time of first defrost cycle (in automatic **[A]** mode, the temperature display should return)
Temperature setting (setpoint)	Press **TEMP**	Refrigerators should show 35°F to 40°F (2°C to 4°C); freezers should show –5°F to 0°F (–21°C to –18°C)
Current interior temperature	Press **RESET**	Temperature should be within 2°F (1°C) of setpoint

MCII TEMPATROL® TROUBLESHOOTING REFERENCE CHART

DISPLAY INDICATION	*CAUSE*	*WHAT TO DO*	*WHAT TO CHECK*
DOOR AJAR... **a. with flashing temperature display** **b. with beeping**	Door has been open... a. over one minute b. over three minutes	Close the door Press RESET for a temporary clear if the door is being held open intentionally.	Is something blocking the door? Is the door being held open longer than is needed?
CLEAN CONDENSER	90-day reminder	Clean the condenser, then press **RESET**.	Have all maintenance procedures been performed on the unit? Make sure routine maintenance is done regularly for best performance.
DEFROST	Unit is in the defrost cycle	Press **RESET** to terminate the current defrost cycle.	
DEFROST lights whenever the compressor shuts off	Long duty cycle	Check the unit during a low usage period when defrosting should not be necessary. On refrigerators, excessive defrost cycles can indicate a service problem. If the unit cannot maintain a 37°F/3°C setpoint under low usage conditions, service may be required	Is the setpoint too low (below 34°F/1°C on refrigerators or –5°F/–21°C on freezers)? Is the condenser clean? Is the room temperature excessively high? Is the unit overloaded with warm products? Is the evaporator clean?
Flashing temperature display... **above 32°F/0°C on freezer** **above 65°F/18°C on refrigerator**	Overtemp condition; the unit temperature is significantly over the setpoint	Keep all doors closed. Watch the unit; let it reach the setpoint temperature	Was the unit just turned on or restarted? Is the unit overloaded with warm products? Is the evaporator clean? Is the condenser clean? Is there, or has there been, a **CHECK SYSTEM** indication? Did the unit just finish defrosting?
Flashing temperature display... **below 32°F/0°C on freezer** **below 65°F/18°C on refrigerator**	Long duty cycle	Press **RESET**. Watch the unit; let it reach the setpoint temperature.	Was the unit recently loaded with warm products? Is the room temperature excessively high? Does the display flash again after one hour?
Flashing temperature display returns after one hour	Continous compressor operation	Press **RESET**. Watch the unit; let it reach the setpoint temperature. Repeated flashing displays indicate very high compressor activity; service may be required.	Is the setpoint too low (below 34°F/1°C on refrigerators or –5°F/–21°C on freezers)? Is the condenser clean? Is the room temperature excessively high? Is the unit overloaded with warm products? Is the evaporator clean?

WIRING DIAGRAM— 115V REFRIGERATORS

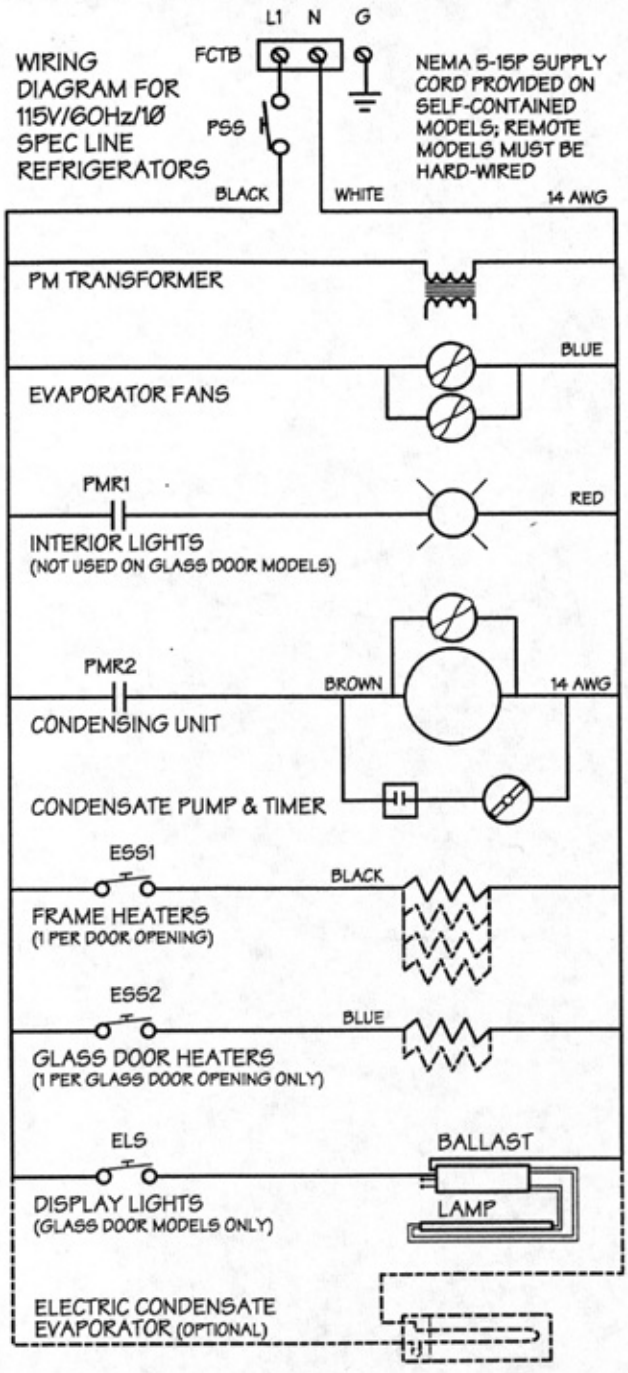

ALL WIRING AT LEAST 18 AWG UNLESS OTHERWISE SPECIFIED

WIRING DIAGRAM— 115V FREEZERS

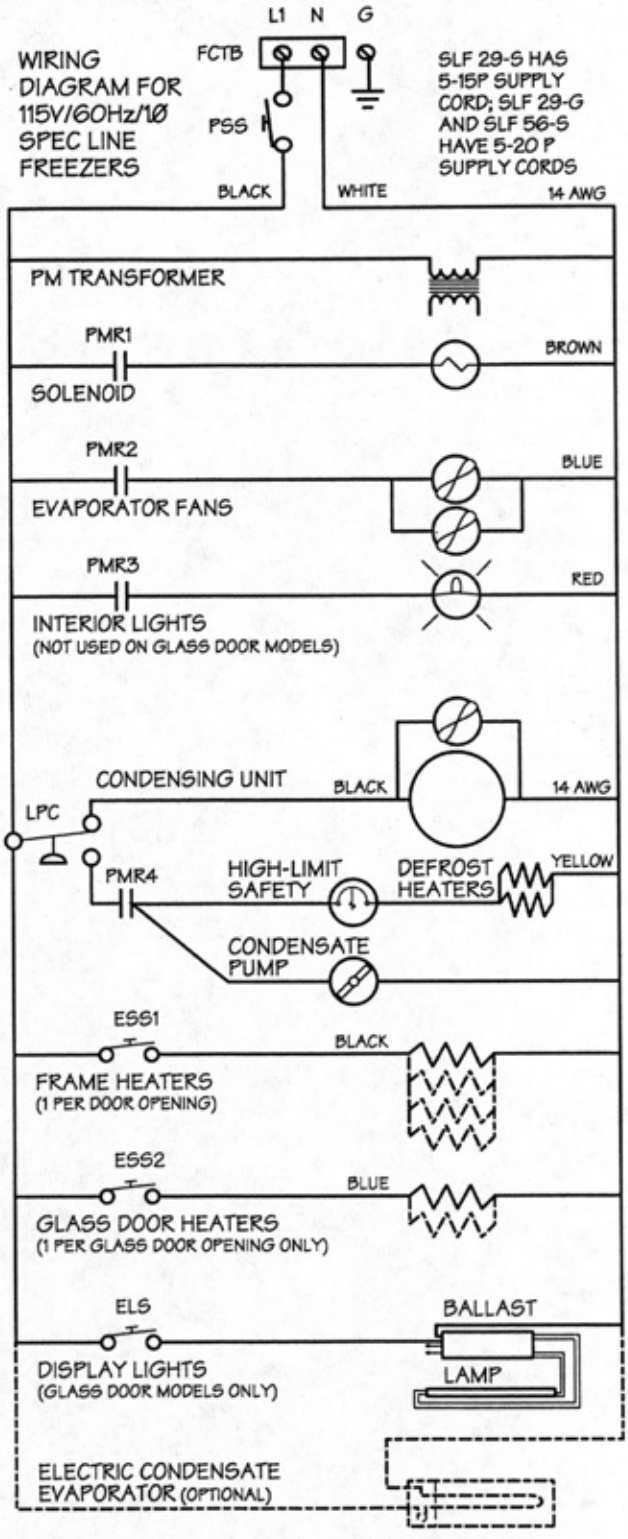

ALL WIRING AT LEAST 18 AWG UNLESS OTHERWISE SPECIFIED

WIRING DIAGRAM—115/208-230V REFRIGERATORS

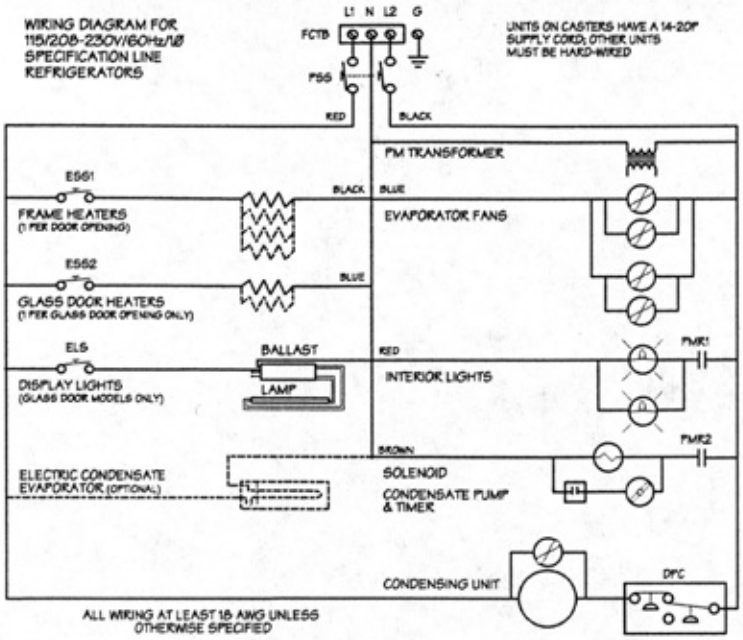

WIRING DIAGRAM—115/208-230V FREEZERS

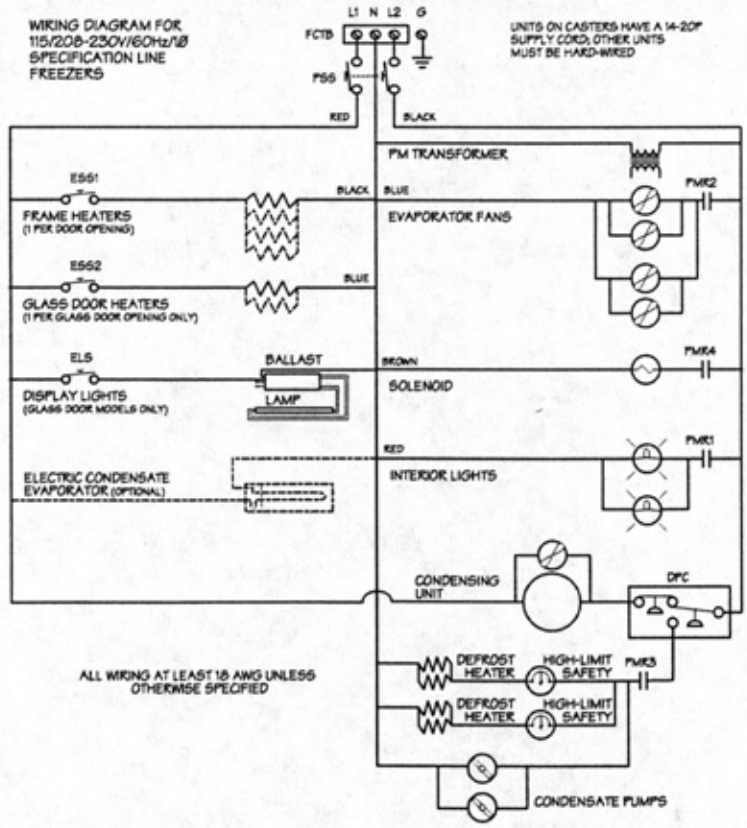

For customer service, call (800) 733-8829,
(800) 733-8821 or (517) 773-7981

Delfield

WIRING DIAGRAM— 115V COMBINATION REFRIGERATOR/FREEZERS

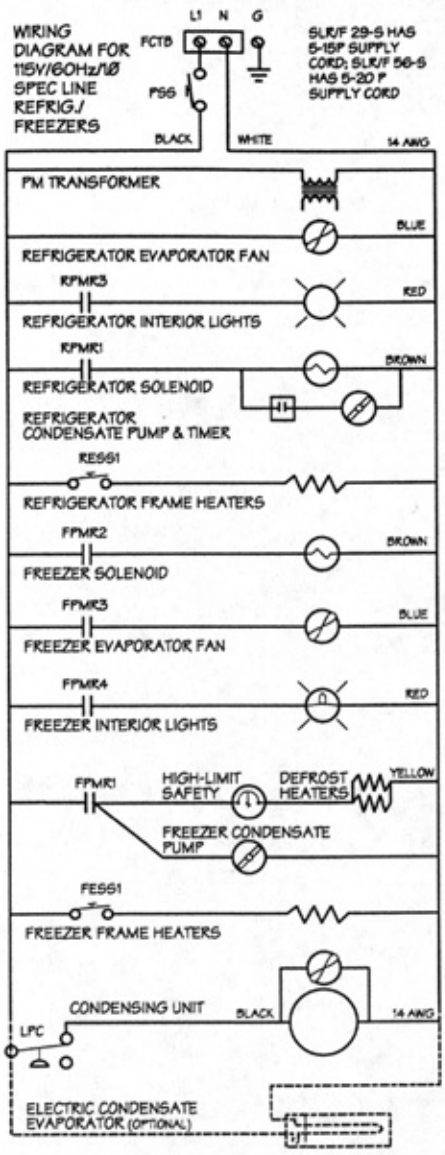

ALL WIRING AT LEAST 18 AWG UNLESS OTHERWISE SPECIFIED

WIRING DIAGRAM— 115/208-230V COMBINATION REFRIGERATOR/FREEZERS

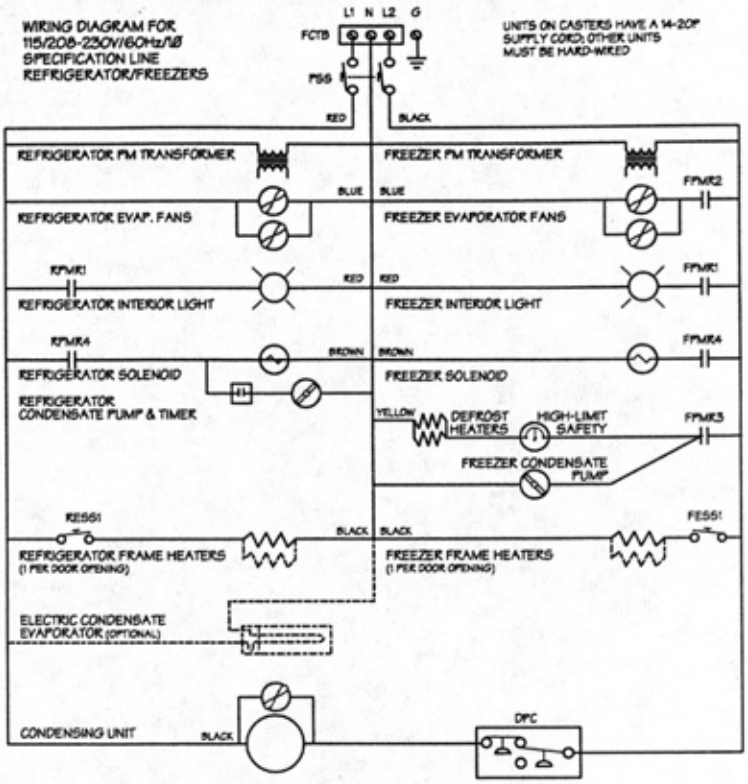

ALL WIRING AT LEAST 18 AWG UNLESS OTHERWISE SPECIFIED

WIRING DIAGRAM—
115/208-230V ONE- & TWO-DOOR HEATED STORAGE UNITS

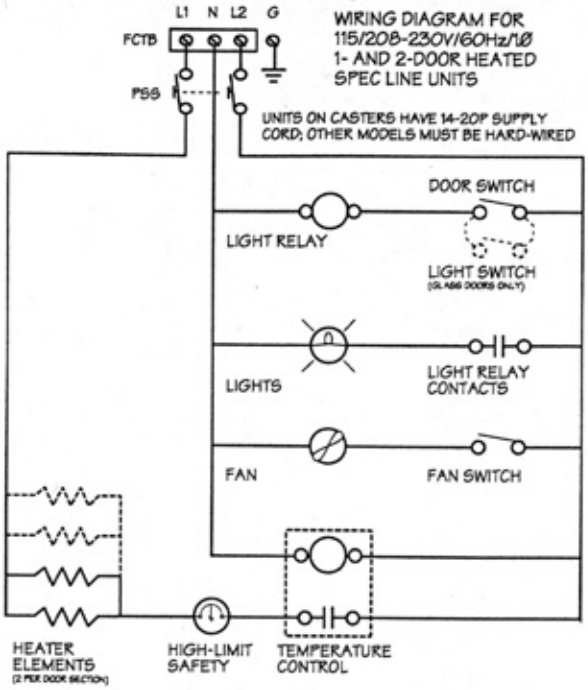

WIRING DIAGRAM—
115/208-230V THREE-DOOR HEATED STORAGE UNITS

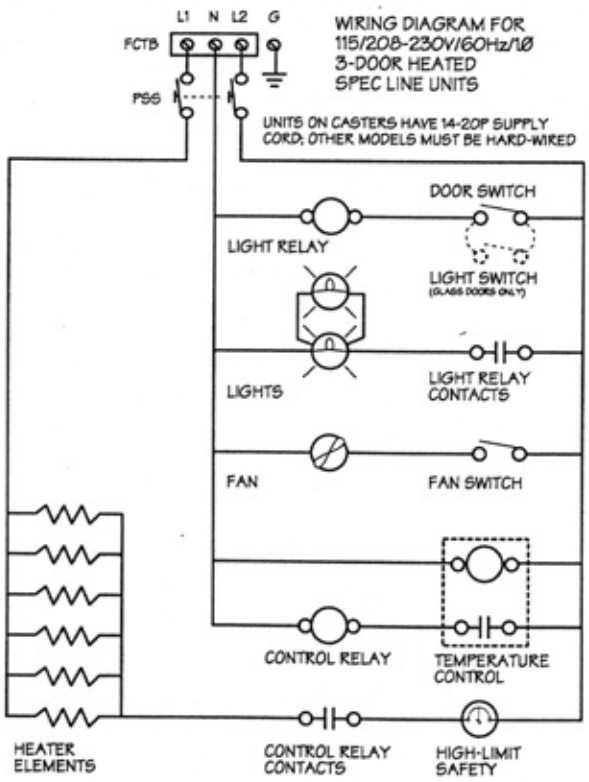

REPLACEMENT PARTS LIST—REFRIGERATORS & FREEZERS

Ballast	219-4362
Breaker cap	consult factory
Caster, 5" dia. w/lock	323-4654
Caster, 5" dia. w/o lock	323-4655
Clip, sensing bulb	351-6205
Clip, shelf support	323-4639
Coil, SLF LH, fin area 4" x 4" x 21"	351-6219
Coil, SLF RH, fin area 4" x 4" x 21"	351-6220
Coil, SLR DR LH, fin area 4" x 4" x 21"	351-6239
Coil, SLR DR RH, fin area 4" x 4" x 21"	351-6238
Coil, SLR LH, fin area 2.25" x 4" x 21"	351-6217
Coil, SLR RH, fin area 2.25" x 4" x 21"	351-6218
Condensate evaporator	219-4347
Condensing unit, 0.20 H.P., medium temp, HCFC-22	352-6682
Condensing unit, 0.33 H.P., medium temp, HCFC-22	352-6697
Condensing unit, 0.50 H.P., high temp, CFC-12	352-6667
Condensing unit, 0.50 H.P., high temp, HCFC-22	352-6755
Condensing unit, 0.50 H.P., low temp, HFC-404A	352-6861
Condensing unit, 0.50 H.P., low temp, CFC-502	352-6821
Condensing unit, 0.75 H.P., high temp, CFC-12	352-6820
Condensing unit, 0.75 H.P., high temp, HCFC-22	352-6736
Condensing unit, 0.75 H.P., low temp, HFC-404A	352-6862
Condensing unit, 0.75 H.P., low temp, CFC-502	352-6822
Condensing unit, 1.00 H.P., high temp, CFC-12	352-6825
Condensing unit, 1.00 H.P., high temp, HCFC-22	352-6737
Condensing unit, 1.00 H.P., low temp, HFC-404A	352-6863
Condensing unit, 1.00 H.P., low temp, CFC-502	352-6823
Condensing unit, 1.50 H.P., low temp, HFC-404A	352-6864
Condensing unit, 1.50 H.P., low temp, CFC-502	352-6824
Cord lead, dual voltage units	218-3329
Cover for fluorescent lights	170-2192
Door assembly, sliding	345-5435
Drier filter, 1/4"	351-6191
Drier filter, 3/8"	351-6227
Evaporator fan blade, 7" CW	216-2681
Evaporator fan motor	216-2667
Fan guard, 7", for evaporator fan motor	351-6185
Gasket, 1/2-size glass door	170-2168
Gasket, full-size glass door	170-2167
Gasket, snap-in, 1/2-size solid door, SLR or SLF	170-2202
Gasket, snap-in, full-size solid door, SLR or SLF	170-2201
Guard, evaporator coil, SLR/SLF	397-8105
Handle, pull style, glass door	323-4401
Harness, interconnect	218-3535
Harness, SLF power module	218-3542
Harness, SLF sensor	218-3533
Harness, SLR power module	218-3543
Harness, SLR sensor	218-3534
Heater, defrost	219-4348
Heater, defrost, coil	219-4403
Heater, defrost, drip pan	219-4402
Heater, defrost, drip pan (refrig./freezer combos only)	219-4404
Heater wire, 1/2-size door frame	218-3575
Heater wire, full-size door frame	218-3559
Heater, drain tube, 5 watt, continuous run	219-4376
Hinge kit, cam rise, 5.75" height (new style)	323-4617
Hinge kit, cam rise, 6.87" height (old style)	323-4593
Lamp-holder, fluorescent bulbs	219-4360
Lamp-holder, fluorescent bulbs w/plunger	219-4361
Leg, 2" dia. x 6" long, solid	323-4595
Light bulb, 40 watt	219-4005
Light, fluorescent	219-4350
Lock, interior mount, glass door	323-4684
Lock, interior mount, solid door	323-4682
Lock, exterior mount	323-4594
Module, control, SLR/SLF (new style MCII Tempatrol)	219-3967
Module, power (relay board)	219-3987
Pin, quick release w/ring	932-1443
Plug, 1/2" S/S, external mount locks	932-1381
Pump, peristaltic	351-6221
Shelf, chrome, 22-1/4" x 26-3/4"	397-8100
Shelf, LH, chrome w/notch, 22-1/4" x 26-3/4"	397-8102
Shelf, RH, chrome w/notch, 22-1/4" x 26-3/4	397-8101
Shelf, S/S w/notch, 22-1/4" x 26-3/4", RH	397-8110
Shelf, S/S w/notch, 22-1/4" x 26-3/4", LH	397-8112
Shelf, S/S, 22-1/4" x 26-3/4"	397-8109
Shelf bridge, chrome, 5" x 23"	397-8103
Shelf bridge, chrome w/hooked end, 5" x 23"	397-8104
Shelf bridge, S/S, 5" x 23"	397-8113
Shelf bridge, S/S w/hooked end, 5" x 23"	397-8114
Socket, lamp	219-4145
Switch, DPST toggle, 20 amp	219-4334
Switch, kit (jambswitch)	219-4346
Switch, proximity	219-4389
Switch, rocker ON/OFF	219-0154
Switch, SPST toggle, 20 amp	219-4333
Switch, toggle, 20 amp, 2 H.P. rated	219-4381
Tray slide	consult factory
Vacuum breaker	170-2169
Vacuum breaker w/170-2169	351-6204
Valve, check, 1/2"	351-6235
Valve, check, 3/8"	351-6237
Valve, expansion, CFC-12, high temp	351-6226
Valve, expansion, HCFC-22, high temp	351-6224
Valve, expansion, HFC-404A, low temp	351-6271
Valve, expansion, HFC-404A, high temp	351-6273
Valve, expansion, CFC-502, low temp	351-6225
Valve, expansion, CFC-502, high temp	351-6228
Valve, pressure regulating, 1/2"	351-6193
Valve, pressure regulating, 5/8"	351-6223
Valve, solenoid, 1/4"	351-6041
Valve, solenoid, 3/8"	351-6222

Before any labor to be done under warranty is performed, be sure the service agent has obtained a Delfield Service Work Authorization Number.

REPLACEMENT PARTS LIST—HEATED STORAGE UNITS

Parts shown in *italics* are hinge and light switch components which are used with units manufactured on or after November 1, 1991. Contact factory with your serial number for exact requirements.

Breaker cap	consult factory
Breaker cap, aluminum, std. door bottom	007-9032
Breaker cap, aluminum, std. door top	007-9067
Breaker cap, aluminum, std. door sides	007-9069
Breaker cap, aluminum, half door sides	007-9034
Breaker cap, aluminum, roll-in top	007-9019
Breaker cap, aluminum, roll-in sides	007-9021
Breaker cap, aluminum, roll-in sides, 20"	007-9023
Caster, 5" dia. w/lock	323-4654
Caster, 5" dia. w/o lock	323-4655
Clip, shelf support	323-4639
Display, digital	219-4374
Element, tubular, heated	219-4369
Fan blade, 6.5" dia.	216-2683
Fan motor	216-2682
Gasket, 1/2 door, heated	170-2210
Gasket, 1/2 door, hinged glass door, heated	170-2188
Gasket, hinged glass door, heated	170-2187
Gasket, standard door, heated	170-2209
Gasket, 3-sided, heated, RI with 14" sleeper	170-2211
Gasket, 3-sided, heated, RI with 20" sleeper	170-2242
Gasket, 3-sided, heated, hinged glass, RI with 14" sleeper	170-2189
Gasket, 3-sided, heated, hinged glass, RI with 20" sleeper	170-2228
Guard, element, heated	397-8107
Guard, fan, heated	397-8106
Hinge kit, cam rise, 6.87" height	323-4593
Hinge,5.75" height, new style	*323-4617*
Knob, control	219-4377
Lampholder, twin snap-in, porcelain	219-3960
Leg, 2" dia. x 6" long, solid	323-4595
Light bulb, 25 watt, teflon coated, incandescent	219-3959
Light bulb, 60 watt, teflon coated, incandescent, HG only	219-4379
Lock, exterior mount	323-4594
Lock, interior mount, glass door	323-4684
Lock, interior mount, solid door	323-4682
Plug, vent	932-1448
Sensor, temperature	219-4370
Shelf, chrome, 22.25" x 26.75"	397-8100
Shelf, S/S, 22.25" x 26.75"	397-8109
Shelf bridge, chrome, 5" x 23"	397-8103
Shelf bridge, S/S, 5" x 23"	397-8113
Switch, fans and/or lights	219-0154
Switch, high limit, heated	219-4366
Switch, light, hinge	219-4346
Switch, light, hinge, sensor, new style	*219-4389*
Switch, light, hinge, actuator, new style	*219-4390*
Switch, main power, 1 & 2 door	219-4383
Switch, main power, 3-door	219-4212
Thermostat, heated	219-4372
Tray slide	consult factory
Vent, pressure relief	323-4670

Before any labor to be done under warranty is performed, be sure the service agent has obtained a Delfield Service Work Authorization Number.