Refrigerator

User manual

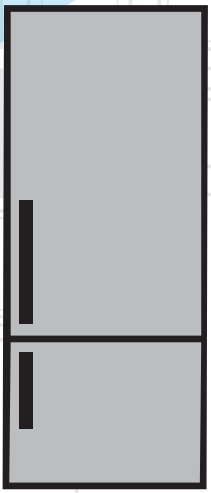

RCNE450K40ZW
RCNE450K40ZX
BBM450W
BBM450X

EN

beko

Please read this guide first!

Dear Customer,

We'd like you to achieve the optimal efficiency from our product, which has been manufactured in modern facilities with meticulous quality controls.

For this purpose, please fully read the user guide before using the product and keep the guide as a reference source. If you turn the product over to another person, provide this guide along with the product.

User guide ensure the quick and safe use of the product.

- Please read the user guide before installing and operating the product.
- Always observe the applicable safety instructions.
- Keep the user guide within easy reach for future use.
- Please read any other documents provided with the product.

Keep in mind that this user guide may apply to several product models. The guide clearly indicates any variations of different models.

Symbols and Remarks

The following symbols are used in the user guide:

	Important information and useful tips.
	Risk of life and property.
	Risk of electric shock.
	The product's packaging is made of recyclable materials, in accordance with the National Environment Legislation.

Table of Contents

1 Safety and environment instructions 3

1.1. General safety 3
1.1.1 HC warning 5
1.1.2 For models with water dispenser 5
1.2. Intended use. 6
1.3. Child safety 6
1.4. Compliance with WEEE Directive and Disposing of the Waste Product. 7
1.5. Compliance with RoHS Directive 7
1.6. Package information 7

2 Your Refrigerator 8

3 Installation 9

4 Preparation 13

4.1. What to do for energy saving. . . 13
4.2. First Use 13

5 Using the product 14

5.1. Indicator panel. 14
5.2. Temperature adjustment button 16
5.3. Rapid freezing 16
5.4. Vacation function 17
5.5. Indicator panel. 18
5.6. Ice bucket 22
5.7. Eggholder. 22
5.8. Fan 22
5.9. Vegetable bin 22
5.10. Zero degree compartment 22
5.11. Moving door rack 23
5.12. Sliding storage box 23
5.13. Moisture controlled vegetable bin 42
5.14. Automatic ice machine 24
5.15. Icematic and ice storage container 25
5.16 Freezing fresh food. 25
5.17. Recommendations for storing frozen foods. 26
5.18 Deep freezer details 26
5.19. Placing the food 26
5.20. Door open alert 27
5.21. Changing the opening direction of the door. 27
5.22 Interior light. 27

6 Maintenance and cleaning 28

6.1. Avoiding bad odors 28
6.2. Protecting the plastic surfaces 28
6.3. Door Glasses 28

6 Maintenance and cleaning 29

7 Troubleshooting 30

1 Safety and environment instructions

This section provides the safety instructions necessary to prevent the risk of injury and material damage. Failure to observe these instructions will invalidate all types of product warranty.

1.1. General safety

- This product should not be used by persons with physical, sensory and mental disabilities, without sufficient knowledge and experience or by children. The device can only be used by such persons under supervision and instruction of a person responsible for their safety. Children should not be allowed to play with this device.
- In case of malfunction, unplug the device.
- After unplugging, wait at least 5 minutes before plugging in again.
- Unplug the product when not in use.
- Do not touch the plug with wet hands! Do not pull the cable to plug off, always hold the plug.
- Wipe the power plug's tip with a dry cloth before plugging in.
- Do not plug in the refrigerator if the socket is loose.
- Unplug the product during installation, maintenance, cleaning and repair.
- If the product will not be used for a while, unplug the product and remove any food inside.
- Do not use the product when the compartment with circuit cards located on the upper back part of the product (electrical card box cover) (1) is open.

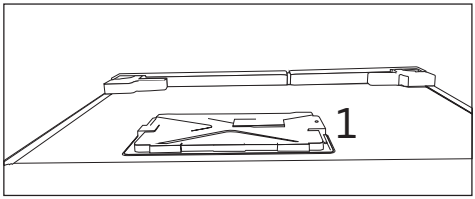

Safety and environment instructions

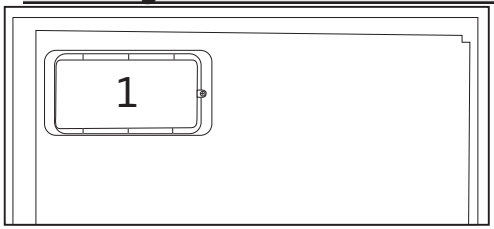

- Do not use steam or steamed cleaning materials for cleaning the refrigerator and melting the ice inside. Steam may contact the electrified areas and cause short circuit or electric shock!
- Do not wash the product by spraying or pouring water on it! Danger of electric shock!
- In case of malfunction, do not use the product, as it may cause electric shock. Contact the authorized service before doing anything.
- Plug the product into an earthed socket. Earthing must be done by a qualified electrician.
- If the product has LED type lighting, contact the authorized service for replacing or in case of any problem.
- Do not touch frozen food with wet hands! It may adhere to your hands!
- Do not place liquids in bottles and cans into the freezer compartment. They may burst out!
- Place liquids in upright position after tightly closing the lid.
- Do not spray flammable substances near the product, as it may burn or explode.
- Do not keep flammable materials and products with flammable gas (sprays, etc.) in the refrigerator.
- Do not place containers holding liquids on top of the product. Splashing water on an electrified part may cause electric shock and risk of fire.

- Exposing the product to rain, snow, sunlight and wind will cause electrical danger. When relocating the product, do not pull by holding the door handle. The handle may come off.
- Take care to avoid trapping any part of your hands or body in any of the moving parts inside the product.
- Do not step or lean on the door, drawers and similar parts of the refrigerator. This will cause the product to fall down and cause damage to the parts.
- Take care not to trap the power cable.

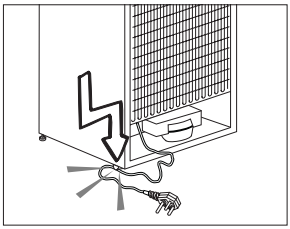

1.1.1 HC warning

If the product comprises a cooling system using R600a gas, take care to avoid damaging the cooling system and its pipe while using and moving the product. This gas is flammable. If the cooling system is damaged, keep the product away from sources of fire and ventilate the room immediately.

The label on the inner left side indicates the type of gas used in the product.

1.1.2 For models with water dispenser

- Pressure for cold water inlet shall be maximum 120 psi (8 bar). If your water pressure exceeds 80 psi (5.5 bar), use a pressure limiting valve in your mains system. If you do not know how to check

your water pressure, ask for the help of a professional plumber.
- If there is risk of water hammer effect in your installation, always use a water hammer prevention equipment in your installation. Consult Professional plumbers is you are not sure that there is no water hammer effect in your installation.
- Do not install on the hot water inlet. Take precautions against of the risk of freezing of the hoses. Water temperature operating interval shall be 33°F (0.6°C) minimum and 100°F (38°C) maximum.
- Use drinking water only.

1.2. Intended use

- This product is designed for home use. It is not intended for commercial use.
- The product should be used to store food and beverages only.
- Do not keep sensitive products requiring controlled temperatures (vaccines, heat sensitive medication, medical supplies, etc.) in the refrigerator.
- The manufacturer assumes no responsibility for any damage due to misuse or mishandling.

1.3. Child safety

- Keep packaging materials out of children's reach.
- Do not allow the children to play with the product.
- If the product's door comprises a lock, keep the key out of children's reach.

1.4. Compliance with WEEE Directive and Disposing of the Waste Product

This product complies with EU WEEE Directive (2012/19/EU). This product bears a classification symbol for waste electrical and electronic equipment (WEEE).

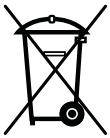

This product has been manufactured with high quality parts and materials which can be reused and are suitable for recycling.

Do not dispose of the waste product with normal domestic and other wastes at the end of its service life. Take it to the collection center for the recycling of electrical and electronic equipment. Please consult your local authorities to learn about these collection centers.

1.5. Compliance with RoHS Directive

- This product complies with EU WEEE Directive (2011/65/EU). It does not contain harmful and prohibited materials specified in the Directive.

1.6. Package information

- Packaging materials of the product are manufactured from recyclable materials in accordance with our National Environment Regulations. Do not dispose of the packaging materials together with the domestic or other wastes. Take them to the packaging material collection points designated by the local authorities.

2 Your Refrigerator

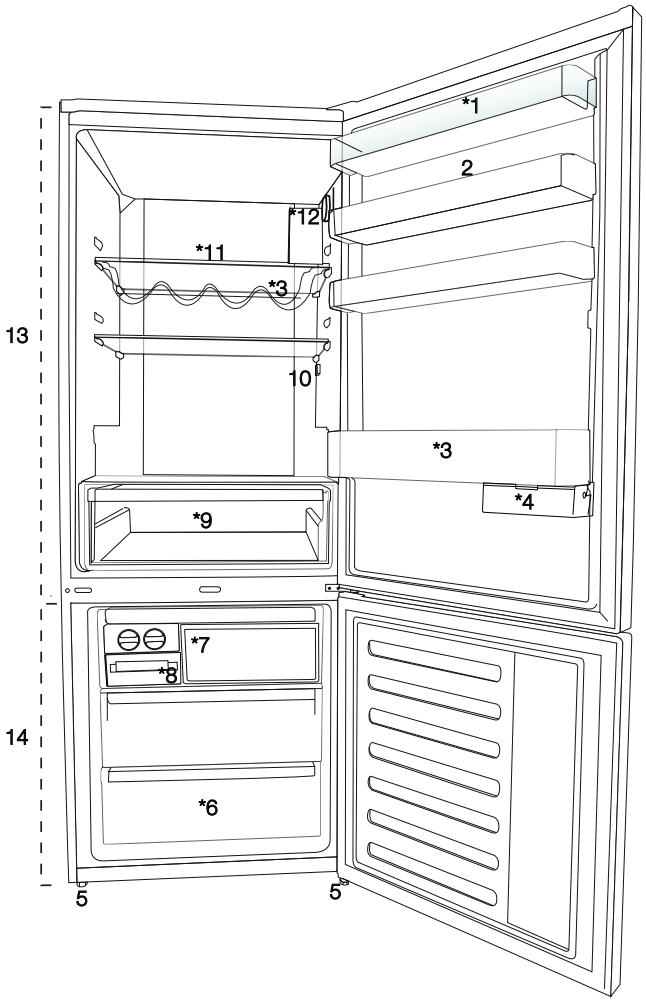

1. Cooler compartment door shelf
2. Egg section
3. Bottle shelf
4. Sliding storage box
5. Adjustable legs
6. Deep freezer compartment
7. Quick freeze compartment
8. Ice cube tray & Ice bank
9. Vegetable bin
10. Interior light
11. Cooler compartment glass shelf
12. Temperature adjustment button
13. Cooler compartment
14. Freezer compartment

*optional: Pictures given in this manual are given as example figures and they may not be exactly the same as your product. If your product does not comprise the relevant parts, the information pertains to other models.

3 Installation

3.1 Appropriate installation location

Contact an Authorized Service for the installation of the product. In order to prepare the product for use, refer the information in the user manual and ensure that electrical installation and water installation are appropriate. If not, call a qualified electrician and technician to have any necessary arrangements carried out.

	WARNING: Manufacturer shall not be held liable for damages that may arise from procedures carried out by unauthorized persons.
	WARNING: Product must not be plugged in during installation. Otherwise, there is the risk of death or serious injury!
	WARNING: If the door clearance of the room where the product shall be place is so tight to prevent passing of the product, remove the door of the room and pass the product through the door by turning it to its side; if this does not work, contact the authorized service.

- Place the product on an even floor surface to prevent jolts.
- Install the product at least 30 cm away from heat sources such as hobs, heater cores and stoves and at least 5 cm away from electrical ovens.
- Product must not be subjected to direct sun light and kept in humid places.
- Appropriate air ventilation must be provided around your product in order to achieve an efficient operation. If the product is to be placed in a recess in the wall, pay attention to leave at least 5 cm distance with the ceiling and side walls.
- Do not install the product in places where the temperature falls below -5°C.

3.2 Installing the plastic wedges

Plastic wedges supplied with the product are used to create the distance for the air circulation between the product and the rear wall.

1. To install the wedges, remove the screws on the product and use the screws supplied together with the wedges.
2. Insert the 2 plastic wedges onto the rear ventilation cover as illustrated in the figure.

3.3 Adjusting the feet

If the product stands unbalanced after installation, adjust the feet on the front by rotating them to the right or left.

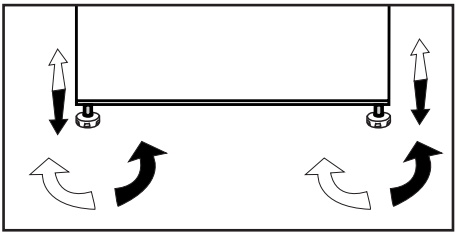

3.4 Electrical connection

	WARNING:Do not make connections via extension cables or multi-plugs.
	WARNING: Damaged power cable must be replaced by the Authorized Service Agent.
	If two coolers are to be installed side by side, there should be at least 4 cm distance between them.

- Our company shall not be liable for any damages that will arise when the product is used without grounding and electrical connection in accordance with the national regulations.
- Power cable plug must be within easy reach after installation.
- Connect your refrigerator to a grounded outlet rated for a voltage value of 220-240V /50 Hz. Outlet shall have 10 to 16A fuse.
- Do not extension cords or cordless multiple outlets between your product and the wall outlet.

	Hot Surface Warning! Side walls of your product is equipped with refrigerant pipes to improve the cooling system. Refrigerant with high temperatures may flow through these areas, resulting in hot surfaces on the side walls. This is normal and does not need any servicing. Please pay attention while touching these areas.

3.5. Reversing the doors

Proceed in numerical order .

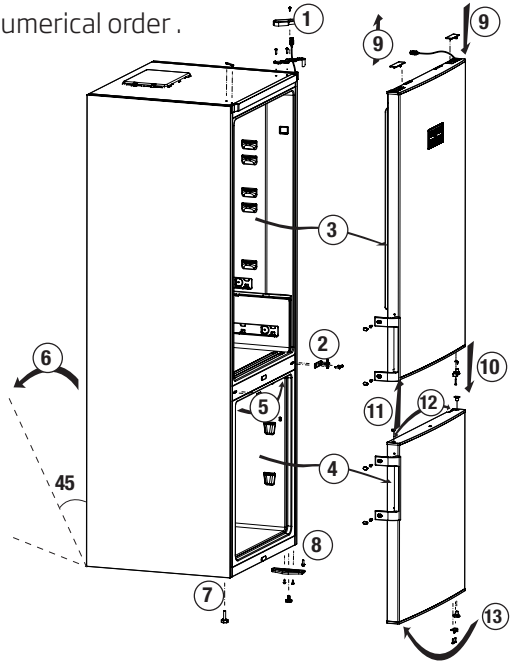

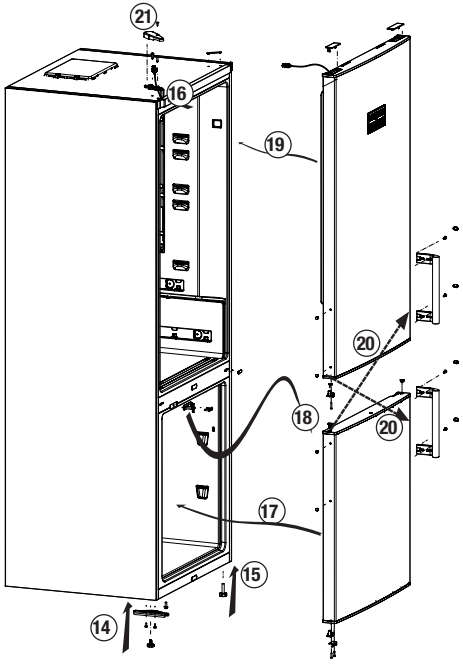

3.6.Reversing the doors

Proceed in numerical order .

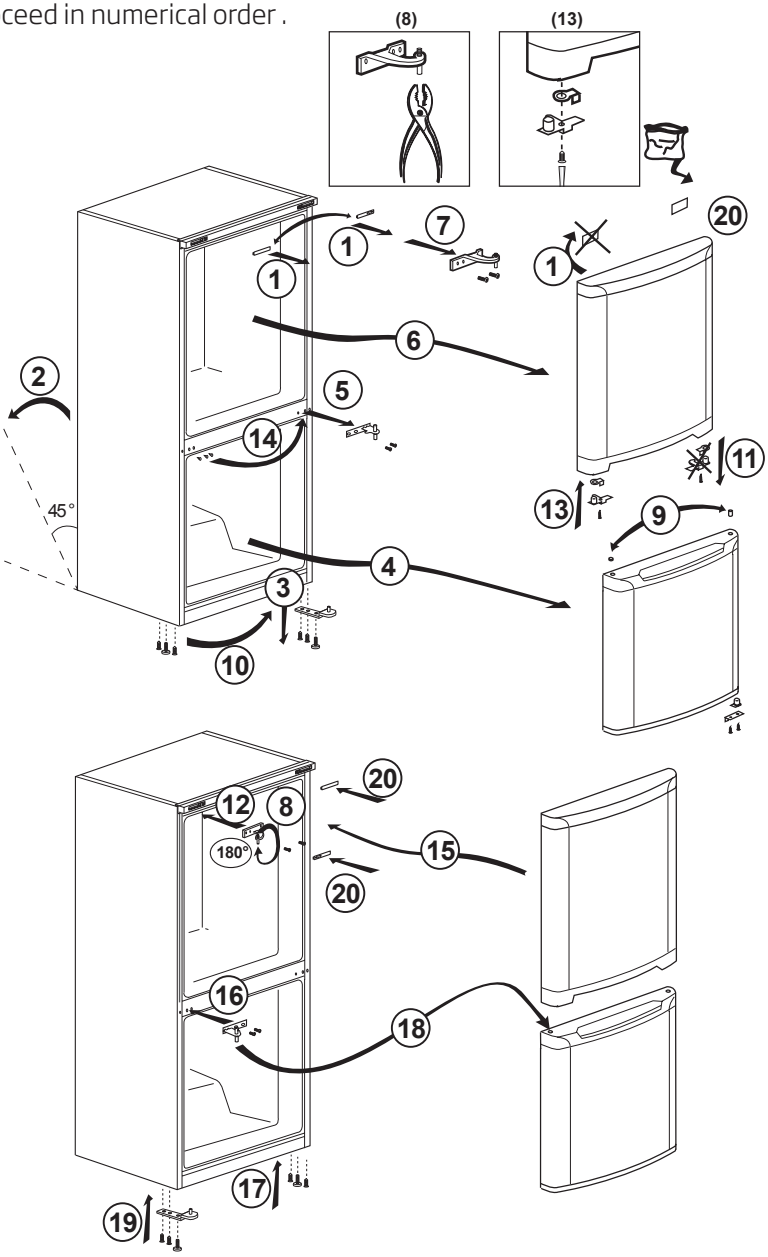

4 Preparation

4.1. What to do for energy saving

Connecting the product to electronic energy-saving systems is harmful, as it may damage the product.

- Do not keep the refrigerator doors open for long periods.
- Do not place hot food or beverages into the refrigerator.
- Do not overfill the refrigerator; blocking the internal air flow will reduce cooling capacity.
- In order to store the maximum amount of food into the cooler compartment of your refrigerator, you should take out the upper drawers and place it onto the glass rack. The declared energy consumption of your refrigerator was determined by taking out the cooler, ice tray and upper drawers in a way that will enable maximum storage. Using the below drawer when storing is strongly recommended. Energy saving function should be activated for best energy consumption.
- You should not block the airflow by putting food in front of the cooler fan. A space of minimum 3cm must be left in front of the protective fan wire when placing food.
- Depending on the product's features; defrosting frozen foods in the cooler compartment will ensure energy saving and preserve food quality.
- Food should be stored using the drawers in the cooler compartment in order to ensure energy saving and protect food in better conditions.
- Food packages should not be in direct contact with the heat sensor located in the cooler compartment. If they are in contact with the sensor, energy consumption of the appliance might increase.
- Make sure the foods are not in contact with the cooler compartment temperature sensor described below.

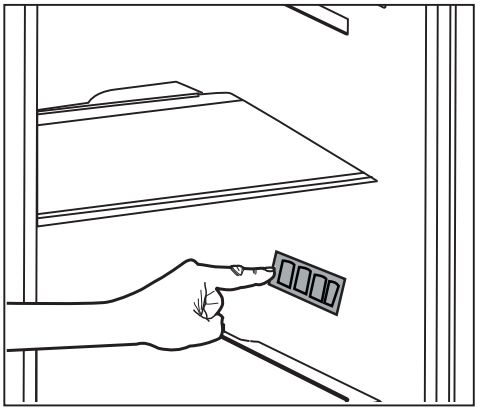

4.2. First Use

Before using your refrigerator, make sure the necessary preparations are made in line with the instructions in "Safety and environment instructions" and "Installation" sections.

- Keep the product running with no food inside for 6 and do not open the door, unless absolutely necessary.

A sound will be heard when the compressor is engaged. It is normal to hear sound even when the compressor is inactive, due to the compressed liquids and gasses in the cooling system.

Front edges of the product might heat up. This is normal. These areas are designed to warm up in order to prevent condensation.

In some models indicator panel turns off automatically 5 minutes after the door closes. It will be reactivated when the door is open or any button is pressed.

5 Using the product

5.1. Indicator panel

Indicator panels may vary according to the product model.
Audio – visual functions on the indicator panel helps you in using your product.

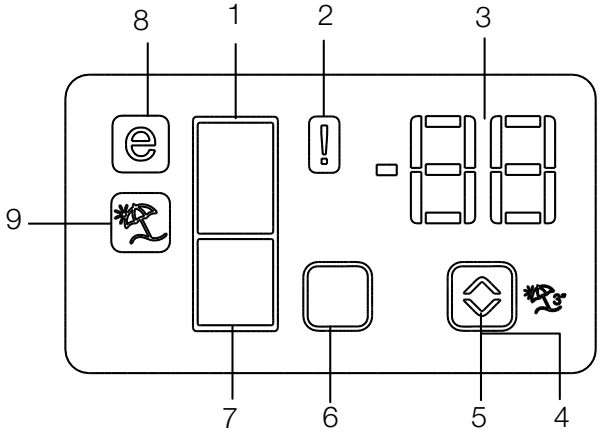

1. Fridge Compartment Indicator
2. Error status indicator
3. Temperature indicator
4. Vacation function button
5. Temperature setting button
6. Compartment selection button
7. Freezer compartment indicator
8. Economy mode indicator
9. Vacation function indicator

***optional**

*optional: Pictures given in this manual are given as example figures and they may not be exactly the same as your product. If your product does not comprise the relevant parts, the information pertains to other models.

Using the product

1. Fridge compartment indicator

Fridge compartment light is illuminated while the fridge compartment temperature is set.

2. Error status indicator

If your refrigerator does not perform enough cooling or in case of a sensor fault, this indicator is activated. When this indicator is activated, "E" is displayed on the freezer compartment temperature indicator, and numbers such as "1,2,3..." are displayed on the fridge compartment temperature indicator. These numbers on the indicator inform service personnel about the error.

3. Temperature indicator

Indicates freezer, fridge compartment temperature.

4. Vacation function button

Press on Vacation Button for 3 seconds to activate this function. When the vacation function is activated, "- -" is displayed on the fridge compartment temperature indicator and no active cooling is performed on the fridge compartment. It is not suitable to keep the food in the fridge compartment when this function is activated. Other compartments shall be continued to be cooled as per their set temperature.

To cancel this function press **Vacation** button again.

5. Temperature setting button

Changes the temperature of the relevant compartment between -24°C... -18°C and 8°C...1°C.

6. Compartment selection button

Selection button: Press compartment selection button to switch between fridge and freezer compartments.

7. Freezer compartment indicator

Fridge compartment light is illuminated while the freezer compartment temperature is set.

8. Economy mode indicator

Indicates that the refrigerator operates in energy saving mode. This display shall be activated if the freezer compartment temperature is set to -18°C.

9. Vacation function indicator

Indicates that vacation is activated.

5.2.Temperature adjustment button

Internal temperature of your refrigerator varies depending on the following reasons:

- Seasonal temperatures,
- Opening the door frequently and leaving it open for long periods,
- Meals put into the refrigerator without being cooled to room temperature, Location of the refrigerator in the room (e.g. exposed to sunshine).
- Internal temperature varying due to these factors can be adjusted via the adjustment button.

Numbers around the adjustment button indicate temperature degrees as "°C".

If the ambient temperature is 20°C, it is recommended to use the refrigerator temperature adjustment at 4°C. In other ambient temperatures this value can be customised.

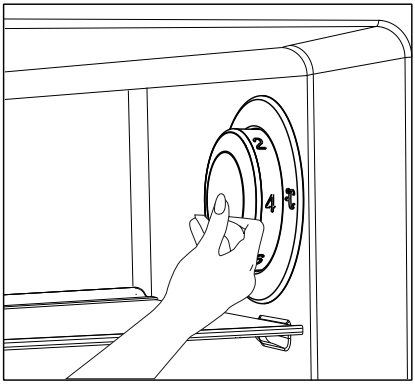

5.3.Rapid freezing

If you want to freeze large amounts of fresh food, switch the temperature adjustment button to (❄) position before putting the food into the quick freezing compartment.

It is recommended to keep the button at this position for 24 hours to freeze maximum amount of food indicated as the freezing capacity. Pay special attention not to mix food stolen as frozen and fresh food.

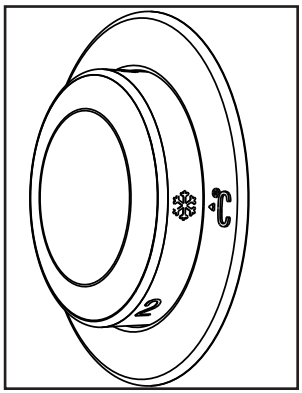

*optional: Pictures given in this manual are given as example figures and they may not be exactly the same as your product. If your product does not comprise the relevant parts, the information pertains to other models.

Remember to switch the temperature adjustment button back to its previous position.

5.4. Vacation function

If doors of the product is not ( ) opened for at least 12 hours after adjusting the temperature setting button to the highest, vacation function is automatically activated.

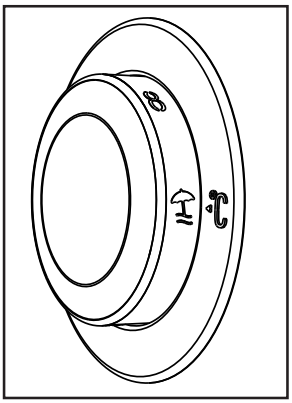

Button setting must be changed to cancel the function.

It is not recommended to store food in the cooler compartment when vacation function is activated.

- After setting is completed, you can conceal the temperature setting button by pressing it inside.

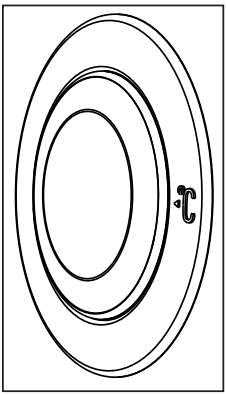

5.5.Indicator panel

Indicator panel allows you to set the temperature and control the other functions related to the product without opening the door of the product. Just press the inscriptions on relevant buttons for function settings.

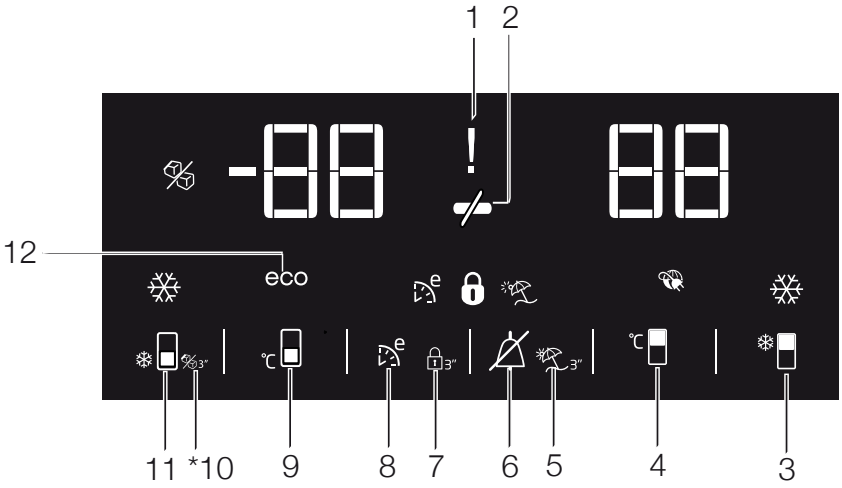

1. Power failure/High temperature / error warning indicator

This indicator ( ) illuminates during power failure, high temperature failures and error warnings. During sustained power failures, the highest temperature that the freezer compartment reaches will flash on the digital display. After checking the food located in the freezer compartment ( ) press the alarm off button to clear the warning.

Please refer to "remedies advised for troubleshooting" section on your manual if you observe that this indicator is illuminated.

2. Energy saving function (display off):

If the product doors are kept closed for a long time energy saving function is automatically activated and energy saving symbol is illuminated. ( )

*Optional: The figures in this user guide are intended as drafts and may not perfectly match your product. If your product does not comprise the relevant parts, the information pertains to other models.

When energy saving function is activated, all symbols on the display other than energy saving symbol will turn off. When the Energy Saving function is activated, if any button is pressed or the door is opened, energy saving function will be canceled and the symbols on display will return to normal.

Energy saving function is activated during delivery from factory and cannot be canceled.

3.Quick fridge function

The button has two functions. To activate or deactivate the quick cool function press it briefly. Quick Cool indicator will turn off and the product will return to its normal settings. ( )

	Use quick cooling function when you want to quickly cool the food placed in the fridge compartment. If you want to cool large amounts of fresh food, activate this function before putting the food into the product.
	If you do not cancel it, quick cooling will cancel itself automatically after 8 hours or when the fridge compartment reaches to the required temperature.

	If you press the quick cooling button repeatedly with short intervals, the electronic circuit protection will be activated and the compressor will not start up immediately.

	This function is not recalled when power restores after a power failure.

4. Fridge compartment temperature setting button

Press this button to set the temperature of the fridge compartment to 8, 7,6, 5,4,3, 2, 8... respectively. Press this button to set the fridge compartment temperature to the desired value. ( )

5.Vacation Function

In order to activate vacation function, press the this button ( ) for 3 seconds, and the vacation mode indicator ( ) will be activated. When the vacation function is activated, "- -" is displayed on the fridge compartment temperature indicator and no active cooling is performed on the fridge compartment. It is not suitable to keep the food in the fridge compartment when this function is activated. Other compartments shall be continued to be cooled as per their set temperature.

To cancel this function press **Vacation function** button again.

6. Alarm off warning:

In case of power failure/high temperature alarm, after checking the food located in the freezer compartment press the alarm off button ( ) to clear the warning.

7. Key lock

Press key lock button ( ) simultaneously for 3 seconds. Key lock symbol ( ) will light up and key lock mode will be activated. Buttons will not function if the Key lock mode is active. Press key lock button simultaneously for 3 seconds again. Key lock symbol will turn off and the key lock mode will be exited.

Press the **key lock** button if you want to prevent changing of the temperature setting of the refrigerator ( ).

8. Eco fuzzy

Press and hold eco fuzzy button for 1 seconds to activate eco fuzzy function. Refrigerator will start operating in the most economic mode at least 6 hours later and the economic usage indicator will turn on when the function is active ( ). Press and hold eco fuzzy function button for 3 seconds to deactivate eco fuzzy function.

This indicator is illuminated after 6 hours when eco fuzzy is activated.

9. Freezer compartment temperature setting button

Press this button to set the temperature of the freezer compartment to -18,-19,-20,-21, -22, -23,-24, -18... respectively. Press this button to set the freezer compartment temperature to the desired value.( )

10. Icematic off indicator

Indicates whether the icematic is on or off. ( )If On, then the icematic is not operating. To operate the icematic again press and hold the On-Off button for 3 seconds.

	Water flow from water tank will stop when this function is selected. However, ice made previously can be taken from the icematic.

11. Quick freeze function button/ icematic on-off button

Press this button to activate or deactivate the quick freezing function. When you activate the function, the freezer compartment will be cooled to a temperature lower than the set value. ( )

To turn on and off the icematic press and hold it for 3 seconds.

	Use the quick freeze function when you want to quickly freeze the food placed in fridge compartment. If you want to freeze large amounts of fresh food, activate this function before putting the food into the product.
	If you do not cancel it, Quick Freeze will cancel itself automatically after 4 hours or when the fridge compartment reaches to the required temperature.
	This function is not recalled when power restores after a power failure.

12. Economic usage indicator

Indicates that the product is running in energy-efficient mode. (eco)This indicator will be active if the Freezer Compartment temperature is set to -18 or the energy efficient cooling is being performed due to Eco-Extra function.



Economic usage indicator is turned off when quick cooling or quick freeze functions are selected.

5.6. Ice bucket

(Optional)

- Take the ice bucket from the freezer compartment.
- Fill the ice bucket with water.
- Place the ice bucket into the freezer compartment.
  The ice will be ready after approximately two hours. Take the ice bucket from the freezer compartment and bend in sightly over the holder that you are going to serve. Ice will easily pour into the serving holder.

5.7.Eggholder

You can put the eggholder on the door or body rack of your choice. If you decide to put it on the body rack, it is recommended to prefer the shelves below as they are colder.



Do not put the eggholder into the freezer compartment.

5.8. Fan

Fan was designed to distribute circulate the cold air inside your refrigerator homogeneously. Operating time of the fan might vary depending the features of your product.

While in some products fan only operates with compressor, in others control system determines the operating time based on the need for cooling.

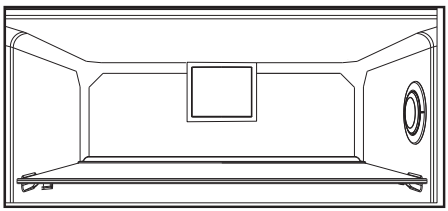

5.9. Vegetable bin

(Optional)

Product's vegetable bin is designed to keep vegetables fresh by preserving humidity. For this purpose, the overall cold air circulation is intensified in the vegetable bin.

5.10. Zero degree compartment

(Optional)

Use this compartment to keep delicatessen at lower temperatures or meat products for immediate consumption.

Zero degree compartment is the coolest place where foods such as dairy products, meat, fish and chicken can be stored in ideal storage conditions. Vegetables and/or fruits should not be stored in this compartment.

5.11. Moving door rack

(Optional)

Moving door rack can be fixed in 3 different positions.

In order to move the rack, push the buttons on the side evenly. Rack will be movable.

Move the rack up or down.

When the rack is in the position that you want, release the buttons. Rack will be fixed again in the position where you have released the buttons.

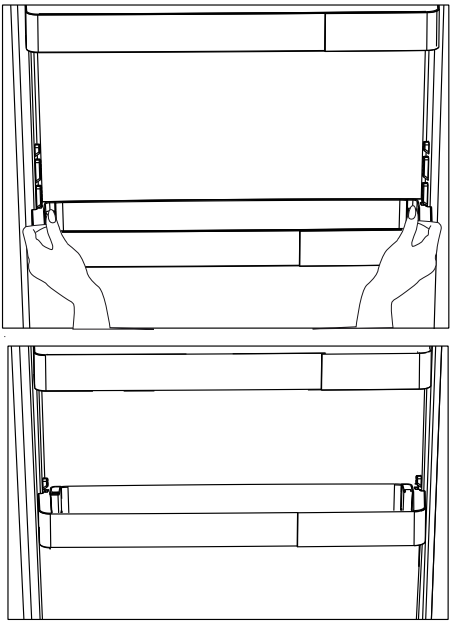

5.12. Sliding storage box

(Optional)

This accessory has been designed to increase the usage volume of the door racks.

Thanks to its ability to move sideways, it enables you to easily place long bottle, jar or boxes that you put in the bottle rack below.

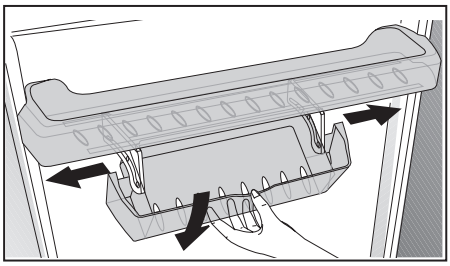

5.13. Moisture controlled vegetable bin

(Optional)

With moisture control feature, moisture rates of vegetables and fruits are kept under control and ensures a longer freshness period for foods.

It is recommended to store leafed vegetables such as lettuce and spinach and similar vegetables prone to moisture loss not on their roots but in horizontal position into the vegetable bin as much as possible.

When placing the vegetables, place heavy and hard vegetables at the bottom and light and soft ones on the top, taking into account the specific weights of vegetables.

Do not leave vegetables in the vegetable bin in plastic bags. Leaving them in plastic bags causes vegetables to rot in a short time. In situations where contact with other vegetables is not preferred, use packaging materials such as paper that has a certain porosity in terms of hygiene.

Do not put fruits that have a high ethylene gas production such as pear, apricot, peach and particularly apple in the same vegetable bin with other vegetables and fruits. The ethylene gas coming out of these fruits might cause other vegetables and fruits to mature faster and rot in a shorter period of time.

5.14. Automatic ice machine

(Optional)

Automatic ice machine enables you to easily make ice in your refrigerator. In order to obtain ice from the ice machine, take out the water tank in the cooler compartment, fill it with water and fix it back.

First ice will be ready in about 2 hours in the ice machine drawer in the cooler compartment.

After placing the full water tank, you can obtain about 60-70 cubes of ice until it is fully empty.

If the water in the tank has waited for 2-3 weeks, it should be changed.

In products with automatic ice machine, you might hear a sound when pouring the ice. This sound is normal and is not a sign of failure.

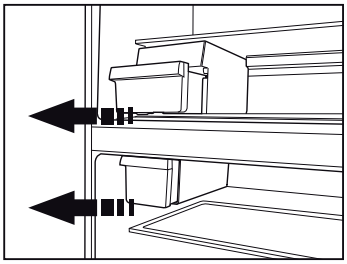

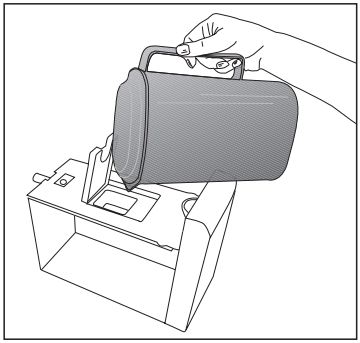

5.15. Icematic and ice storage container

***optional**

Using the Icematic

Fill the Icematic with water and place it into its seat. Your ice will be ready approximately in two hours. Do not remove the Icematic from its seating to take ice.

Turn the knobs on the ice reservoirs clockwise by 90 degrees.

Ice cubes in the reservoirs will fall down into the ice storage container below.

You may take out the ice storage container and serve the ice cubes.

If you wish, you may keep the ice cubes in the ice storage container.

Ice storage container

Ice storage container is only intended for accumulating the ice cubes. Do not put water in it. Otherwise, it will break.

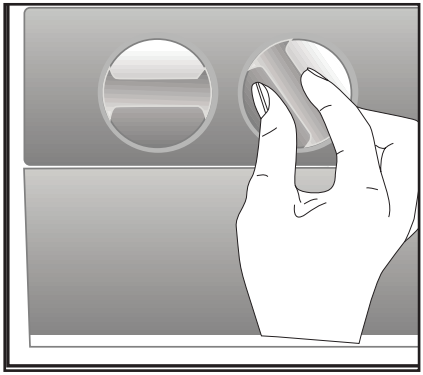

5.16. Freezing fresh food

- To preserve food quality, the food items placed in the freezer compartment must be frozen as quickly as possible, use the rapid freezing for this.
- Freezing the food items when fresh will extend the storage time in the freezer compartment.
- Pack the food items in air-tight packs and seal tightly.
- Make sure the food items are packed before putting in the freezer. Use freezer holders, tinfoil and damp-proof paper, plastic bag or similar packaging materials instead of traditional packaging paper.

Ice in the freezing compartment thaws automatically.

- Mark each food pack by writing the date on the package before freezing. This will allow you to determine the freshness of each pack every time the freezer is opened. Keep the earlier food items in the front to ensure they are used first.
- Frozen food items must be used immediately after defrosting and should not be frozen again.
- Do not free large quantities of food at once.

Freezer Compartment Temperature Setting	Cooler Compartment Temperature Setting	Details
-18°C	4°C	This is the default, recommended setting.
-20,-22 or -24°C	4°C	These settings are recommended for ambient temperatures exceeding 30°C.
Quick Freeze	4°C	Use when you want to freeze your food in a short time. When the process ends, the product will regain its position.
-18°C or colder	2°C	Use these settings if you believe the cooler compartment is not cold enough due to ambient temperature or frequently opening the door.

5.17. Recommendations for storing frozen foods

The compartment must be set to at least -18°C.

1. Place the food items in the freezer as quickly as possible to avoid defrosting.
2. Before freezing, check the "Expiry Date" on the package to make sure it is not expired.
3. Make sure the food's packaging is not damaged.

5.18. Deep freezer details

As per the IEC 62552 standards, the freezer must have the capacity to freeze 4,5 kg of food items at -18°C or lower temperatures in 24 hours for each 100 litres of freezer compartment volume.
Food items can only be preserved for extended periods at or below temperature of -18°C .
You can keep the foods fresh for months (in deep freezer at or below temperatures of 18°C).
The food items to be frozen must not contact the already-frozen food inside to avoid partial defrosting.
Boil the vegetables and filter the water to extend the frozen storage time.
Place the food in air-tight packages after filtering and place in the freezer.
Bananas, tomatoes, lettuce, celery, boiled eggs, potatoes and similar food items should not be frozen. In case this food rots, only nutritional values and eating qualities will be negatively affected. A rotting threatening human health is not in question.

5.19. Placing the food

Freezer compartment shelves	Various frozen goods including meat, fish, ice cream, vegetables etc.

Cooler compartment shelves	Food items inside pots, capped plate and capped cases, eggs (in capped case)
Cooler compartment door shelves	Small and packed food or beverages
Vegetable bin	Fruits and vegetables
Fresh food compartment	Delicatessen (breakfast food, meat products to be consumed in short notice)

5.20. Door open alert

(Optional)

An audible alert will be heard if the product's door remains open for at least 1 minute. The audible alert will stop when the door is closed or any button on the display (if available) is pressed.

Door open alert is indicated to the user both audibly and visually. Interior lighting will turn of if the warning continues for 10 min.

5.21. Changing the opening direction of the door

You can change the direction of opening of your refrigerator depending on the location where you use it. When you need this, consult the closest Authorized Service.

The explanation above is a general statement. You should check the warning tag located inside the product package about the changeability of direction of the door.

5.22. Interior light

Interior light uses a LED type lamp. Contact the authorized service for any problems with this lamp.

Lamp(s) used in this appliance cannot be used for house lighting. Intended use of this lamp is to help the user place food into the refrigerator / freezer safely and comfortably.

6 Maintenance and cleaning

Service life of the product is increase if it is regularly cleaned



WARNING: First unplug the product before cleaning your refrigerator.

- Never use any sharp and abrasive tools, soap, household cleaners, detergent and wax polish for cleaning.
- Dissolve one teaspoon of carbonate in half liter of water. Soak a cloth with the solution and wrung it thoroughly. Wipe the interior of the appliance with this cloth and the dry thoroughly.
- Make sure that no water enters the lamp housing and other electrical items.
- Clean the door with a damp cloth. To remove door and body shelves, remove all of its contents. Remove door shelves by moving them upwards. After cleaning, slide them from top to bottom to install.
- Never use cleaning agents or water that contain chlorine to clean the outer surfaces and chromium coated parts of the product. Chlorine causes corrosion on such metal surfaces.
- Do not use sharp, abrasive tools, soap, household cleaning agents, detergents, kerosene, fuel oil, varnish etc. to prevent removal and deformation of the prints on the plastic part. Use lukewarm water and a soft cloth for cleaning and then wipe it dry.

6.1. Avoiding bad odors

Materials that may cause odor are not used in the production of our appliances. However, due to inappropriate food preserving conditions and not cleaning the inner surface of the appliance as required can bring forth the problem of odor.

Therefore, clean the refrigerator with carbonate dissolved in water every 15 days.

- Keep the food in closed containers. Microorganisms spreading out from uncovered containers can cause unpleasant odours.
- Never keep the food that have expired best before dates and spoiled in the refrigerator.

6.2. Protecting the plastic surfaces

Clean with arm water immediately as the oil may cause damage on the surface when it is poured on plastic surfaces.

6.3. Door Glasses

Remove the protective foil on the glasses.

There is a coating on the surface of the glasses.This coating minimizes the stain build-up and helps to remove the possible stains and dirt easily.Glasses that are not protected with such a coating may be subject to persistent binding of air or water based organic or inorganic dirt such as limescale, mineral salts, unburned hydrocarbons, metal oxides and silicones that can easily and quickly cause stains or material damage. Keeping the glass clean becomes too difficult despite the regular cleaning. Consequently, the appearance and the transparency of the glass deteriorates. Harsh and corrosive cleaning methods and compounds will intensify these defects and speed up the deterioration process.

6 Maintenance and cleaning

Water-based cleaning products that are not alkaline and corrosive must be used for regular cleaning purposes.

Non-alkaline and non-corrosive materials must be used for cleaning so that the service life of this coating lasts for a long time.

These glasses are tempered to increase their durability against impacts and breaking.A safety film is also applied to their rear surfaces as an extra safety measure in order to prevent them from causing damage to their surrounding in case of a breakage.

*Alkali is a base that forms hydroxide ions (OH^-) when it is dissolved in water.

Li (Lithium), Na (Sodium), K (Potassium) Rb (Rubidium), Cs (Cesium) and artificial and radioactive Fr (Fan-sium) metals are called ALKALI METALS.

7 Troubleshooting

Check this list before contacting the service. Doing so will save you time and money. This list includes frequent complaints that are not related to faulty workmanship or materials. Certain features mentioned herein may not apply to your product.

The refrigerator is not working.

- The power plug is not fully engaged. > > > Push the plug completely into the socket.
- The fuse connected to the socket powering the product or the main fuse is blown. > > > Check the fuses.

Condensation on the side wall of the cooler compartment (MULTI ZONE, COOL, CONTROL and FLEXI ZONE).

- The environment is too cold. > > Do not install the product in environments with temperatures below -5°C.
- The door is opened too frequently > > > Take care not to open the product's door too frequently.
- The environment is too humid. > > > Do not install the product in humid environments.
- Foods containing liquids are kept in unsealed holders. > > > Keep the foods containing liquids in sealed holders.
- The product's door is left open. > > > Do not keep the product's door open for long periods.
- The thermostat is set to too low temperature. > > > Set the thermostat to appropriate temperature.

Compressor is not working.

- In case of sudden power failure or pulling the power plug off and putting back on, the gas pressure in the product's cooling system is not balanced, which triggers the compressor thermic safeguard. The product will restart after approximately 6 minutes. If the product does not restart after this period, contact the Authorised Service Agent.
- Defrosting is active. > > > This is normal for a fully-automatic defrosting product. The defrosting is carried out periodically.
- The product is not plugged in. > > > Make sure the power cord is plugged in.
- The temperature setting is incorrect. > > > Select the appropriate temperature setting.
- The power is out. > > > The product will continue to operate normally once the power is restored.

The refrigerator's operating noise is increasing while in use.

- The product's operating performance may vary depending on the ambient temperature variations. This is normal and not a malfunction.

The refrigerator runs too often or for too long.

Troubleshooting

- The new product may be larger than your previous one. Larger products will run for longer periods.
- The room temperature may be high. > > > The product will normally run for long periods in higher room temperature.
- The product may have been recently plugged in or a new food item is placed inside. > > > The product will take longer to reach the set temperature when recently plugged in or a new food item is placed inside. This is normal
- Large quantities of hot food may have been recently placed into the product. > > > Do not place hot food into the product.
- The doors were opened frequently or kept open for long periods. > > > The warm air moving inside will cause the product to run longer. Do not open the doors too frequently.
- The freezer or cooler door may be ajar. > > > Check that the doors are fully closed.
- The product may be set to temperature too low. > > > Set the temperature to a higher degree and wait for the product to reach the adjusted temperature.
- The cooler or freezer door washer may be dirty, worn out, broken or not properly settled. > > > Clean or replace the washer. Damaged / torn door washer will cause the product to run for longer periods to preserve the current temperature.

The freezer temperature is very low, but the cooler temperature is adequate.

- The freezer compartment temperature is set to a very low degree. > > > Set the freezer compartment temperature to a higher degree and check again.

The cooler temperature is very low, but the freezer temperature is adequate.

- The cooler compartment temperature is set to a very low degree. > > > Set the freezer compartment temperature to a higher degree and check again.

The food items kept in cooler compartment drawers are frozen.

- The cooler compartment temperature is set to a very low degree. > > > Set the freezer compartment temperature to a higher degree and check again.

The temperature in the cooler or the freezer is too high.

- The cooler compartment temperature is set to a very high degree. > > > Cooler compartment temperature setting has an effect on the freezer compartment temperature. Change the temperature of the cooler or freezer compartment and wait until the temperature of the related compartments come to the adequate level.
- The doors were opened frequently or kept open for long periods. > > > Do not open the doors too frequently.
- The door may be ajar. > > > Fully close the door.
- The product may have been recently plugged in or a new food item is placed inside. > > > This is normal. The product will take longer to reach the set temperature when recently plugged in or a new food item is placed inside.
- Large quantities of hot food may have been recently placed into the product. > > > Do not place hot food into the product.

Shaking or noise.

Troubleshooting

- The ground is not level or durable. > > > If the product is shaking when moved slowly, adjust the stands to balance the product. Also make sure the ground is sufficiently durable to bear the product.
- Any items placed on the product may cause noise. > > > Remove any items placed on the product.

The product is making noise of liquid flowing, spraying etc.

- The product's operating principles involve liquid and gas flows. > > > This is normal and not a malfunction.

There is sound of wind blowing coming from the product.

- The product uses a fan for the cooling process. This is normal and not a malfunction.

There is condensation on the product's internal walls.

- Hot or humid weather will increase icing and condensation. This is normal and not a malfunction.
- The doors were opened frequently or kept open for long periods. > > > Do not open the doors too frequently; if open, close the door.
- The door may be ajar. > > > Fully close the door.

There is condensation on the product's exterior or between the doors.

- The ambient weather may be humid, this is quite normal in humid weather. > > > The condensation will dissipate when the humidity is reduced.

The interior smells bad.

- The product is not cleaned regularly. > > > Clean the interior regularly using sponge, warm water and carbonated water.
- Certain holders and packaging materials may cause odour. > > > Use holders and packaging materials without free of odour.
- The foods were placed in unsealed holders. > > > Keep the foods in sealed holders. Microorganisms may spread out of unsealed food items and cause malodour.
- Remove any expired or spoilt foods from the product.

The door is not closing.

- Food packages may be blocking the door. > > > Relocate any items blocking the doors.
- The product is not standing in full upright position on the ground. > > > Adjust the stands to balance the product.
- The ground is not level or durable. > > > Make sure the ground is level and sufficiently durable to bear the product.

The vegetable bin is jammed.

- The food items may be in contact with the upper section of the drawer. > > > Reorganize the food items in the drawer.



WARNING: If the problem persists after following the instructions in this section, contact your vendor or an Authorised Service Agent. Do not try to repair the product.



57 5754 0000/AK
EN

www.beko.com.au