DOMETIC

# REFRIGERATION
# NRX

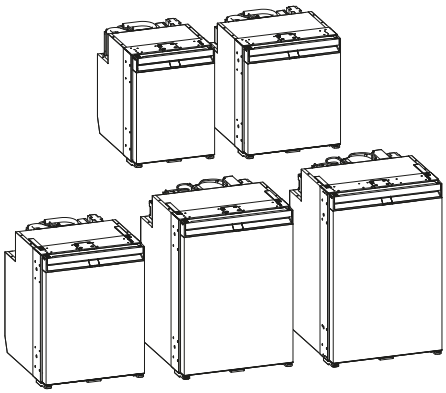

**NRX1050, 1060, 1080, 1115, 1130 (C/S)**

EN **Compressor refrigerator**
Operating manual . . . . . 9

© 2023 Dometic Group. The visual appearance of the contents of this manual is protected by copyright and design law. The underlying technical design and the products contained herein may be protected by design, patent or be patent pending. The trademarks mentioned in this manual belong to Dometic Sweden AB. All rights are reserved.

**1**

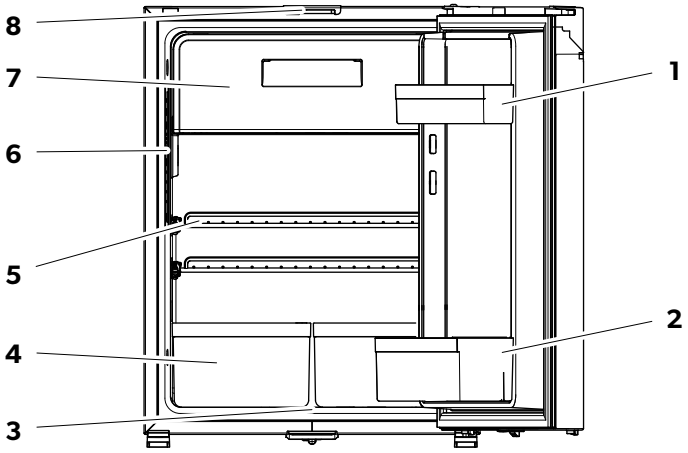


**2**

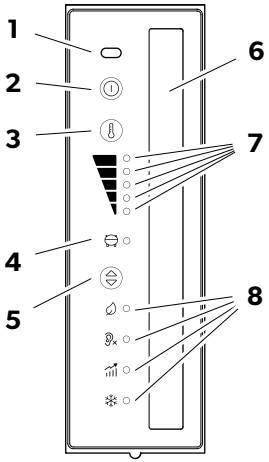

**3**

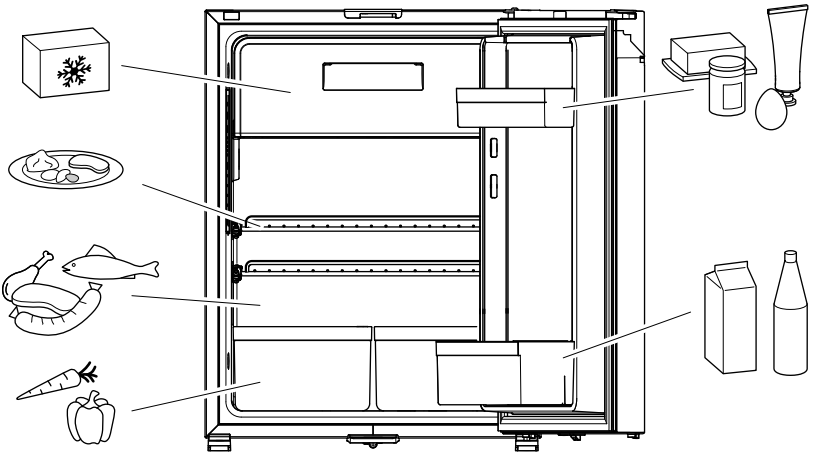

**4**

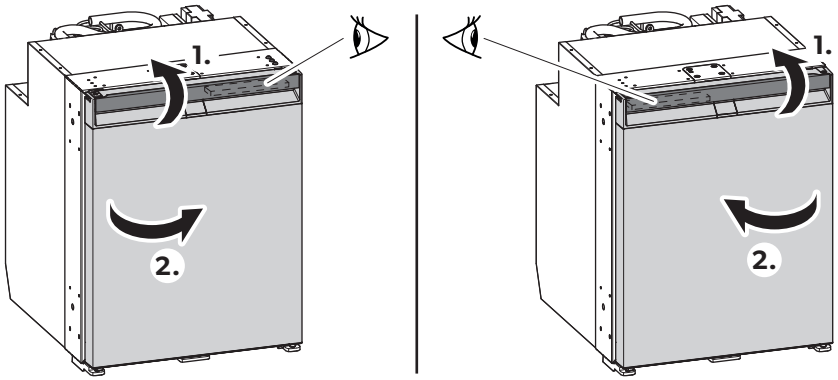


**5**

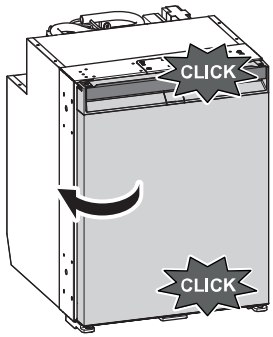

**6**

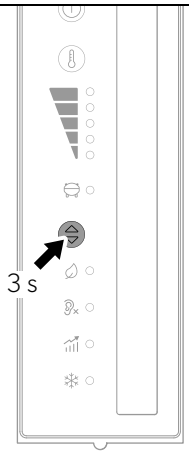


**7** **NRX0050, NRX1050**

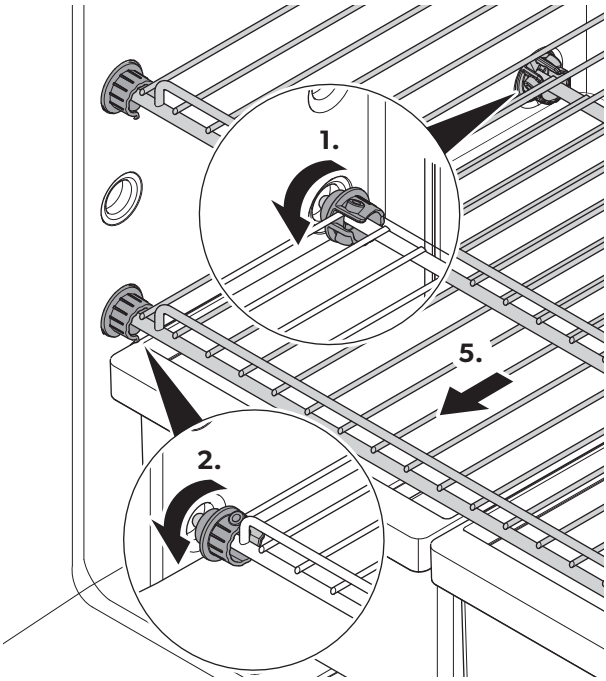


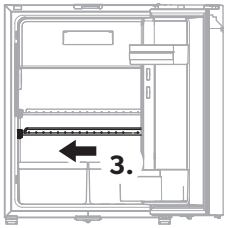


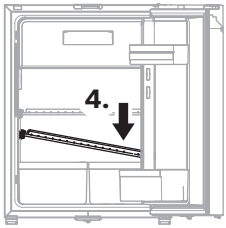

**8** **NRX0060 – 0130, NRX1060 – 1130**

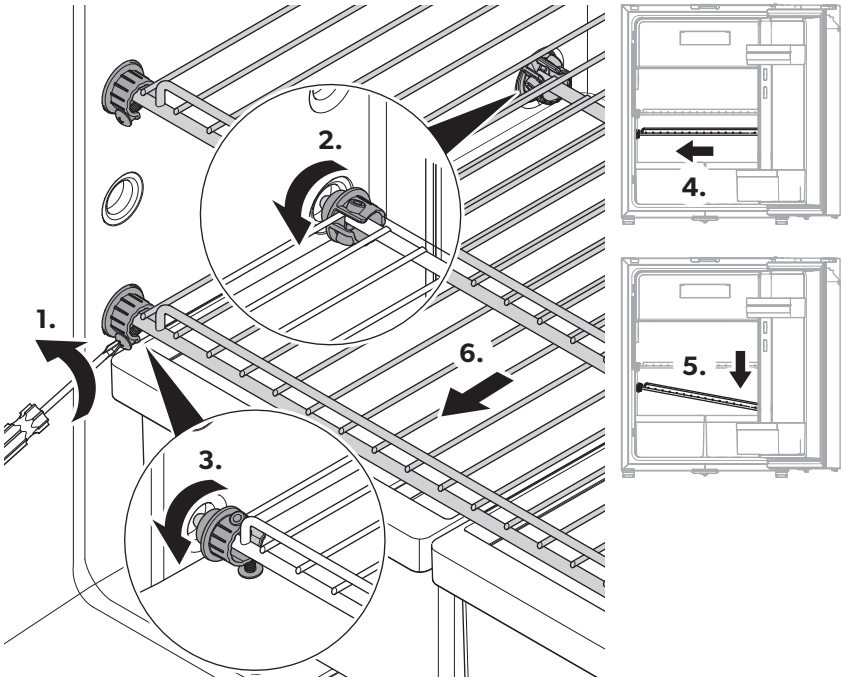


**9**

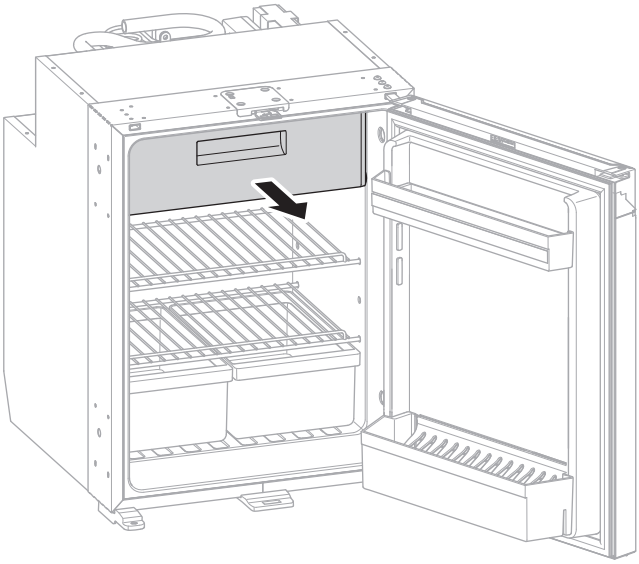

**10**

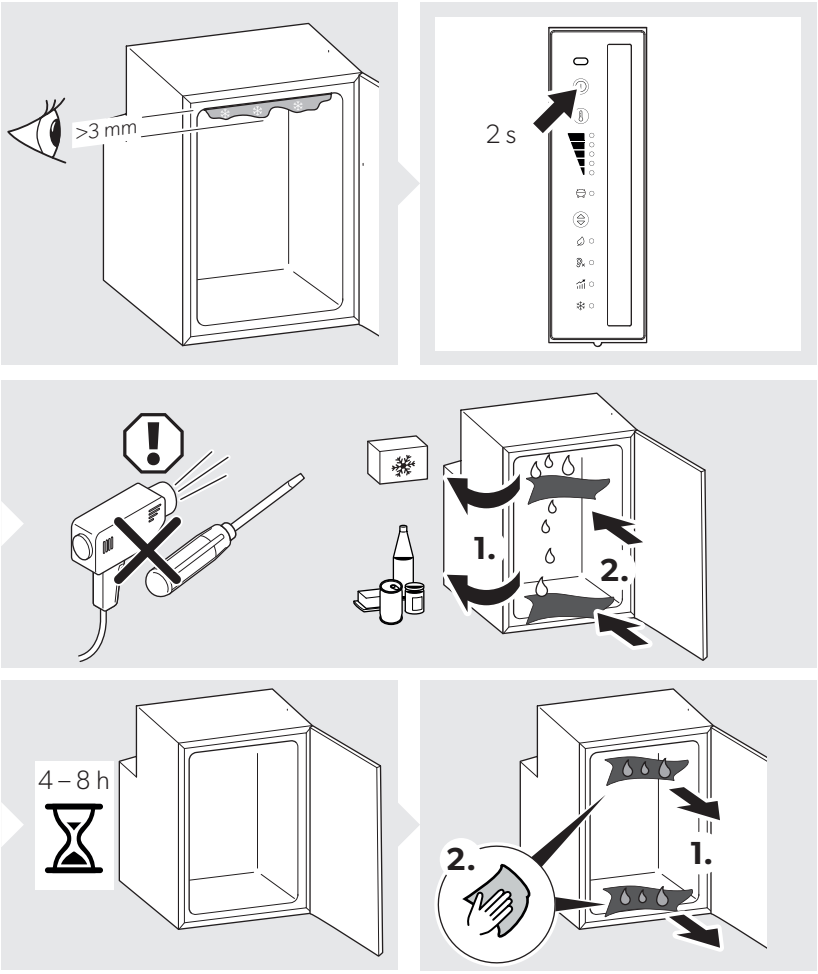

**11**

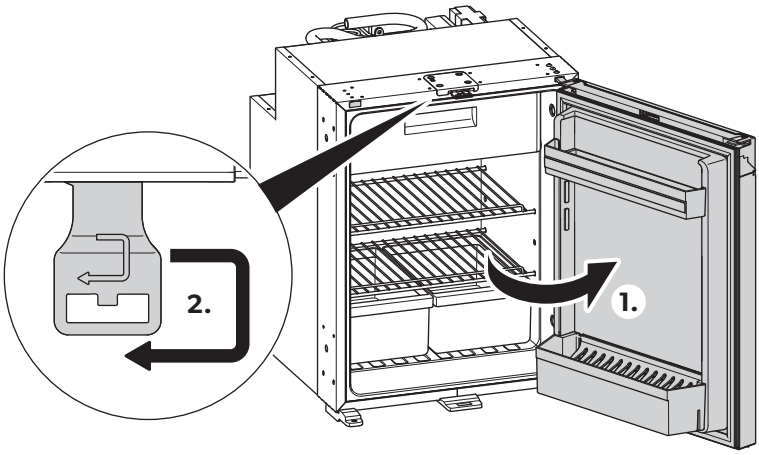


**12**

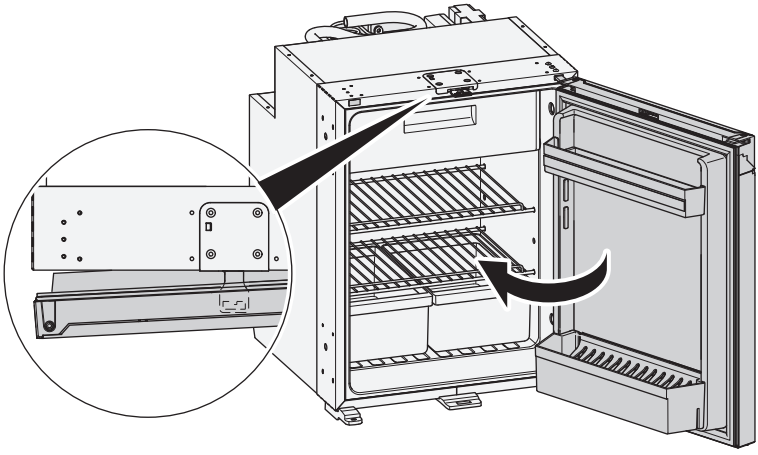

Please read these instructions carefully and follow all instructions, guidelines, and warnings included in this product manual in order to ensure that you install, use, and maintain the product properly at all times. These instructions MUST stay with this product.

By using the product, you hereby confirm that you have read all instructions, guidelines, and warnings carefully and that you understand and agree to abide by the terms and conditions as set forth herein. You agree to use this product only for the intended purpose and application and in accordance with the instructions, guidelines, and warnings as set forth in this product manual as well as in accordance with all applicable laws and regulations. A failure to read and follow the instructions and warnings set forth herein may result in an injury to yourself and others, damage to your product or damage to other property in the vicinity. This product manual, including the instructions, guidelines, and warnings, and related documentation, may be subject to changes and updates. For up-to-date product information, please visit documents.dometic.com, dometic.com.

# Contents


Explanation of symbols . . . . . 9
Safety instructions . . . . . 9
Scope of delivery . . . . . 11
Accessories . . . . . 11
Intended use . . . . . 12
Technical description . . . . . 12
Operation . . . . . 14
Cleaning and maintenance . . . . . 16
Troubleshooting . . . . . 17
Warranty . . . . . 20
Disposal . . . . . 20
Technical data . . . . . 20


# Explanation of symbols

**DANGER!**
**Safety instruction:** Indicates a hazardous situation that, if not avoided, will result in death or serious injury.

**WARNING!**
**Safety instruction:** Indicates a hazardous situation that, if not avoided, could result in death or serious injury.

**CAUTION!**
**Safety instruction:** Indicates a hazardous situation that, if not avoided, could result in minor or moderate injury.

**NOTICE!**
Indicates a situation that, if not avoided, can result in property damage.

**NOTE**
Supplementary information for operating the product.

# Safety instructions

## General safety

**WARNING! Failure to obey these warnings could result in death or serious injury.**

### Electrocution hazard

- Installation and removal of the refrigerator may only be carried out by qualified personnel.
- Do not operate the refrigerator if it is visibly damaged.
- This refrigerator may only be repaired by qualified personnel. Improper repairs can result in considerable danger or damage to the refrigerator.
- If the power cable for this refrigerator is damaged, it must be replaced by the manufacturer, customer service or a similarly qualified person in order to prevent safety hazards.
- When positioning the refrigerator, ensure the supply cord is not trapped or damaged.
- Do not locate multiple portable socket-outlets or portable power supplies at the rear of the refrigerator.
- Plug the device to sockets that ensure proper connection especially when the device needs to be grounded.

### Explosion hazard

- Do not store any explosive substances, such as aerosol cans with propellants, in the refrigerator.

### Health hazard

- This refrigerator is not intended for use by persons (including children) with reduced physical, sensory or mental capabilities, or lack of experience and knowledge, unless they have been given supervision or instruction concerning use of the refrigerator by a person responsible for their safety.
- Children aged from 3 to 8 years are allowed to load and unload the refrigerator.

- Cleaning and user maintenance shall not be made by children without supervision.
- Children must be supervised to ensure that they do not play with the refrigerator.

**Risk of child entrapment**

- Ensure that the shelves are mounted and secured so that children cannot lock themselves in the refrigerator.
- Before disposing of your old refrigerator:
  - Dismantle the drawers.
  - Leave the shelves in the refrigerator so that children cannot climb inside.
  - Take off the doors.

**CAUTION! Failure to obey these cautions could result in minor or moderate injury.**

**Health hazard**

- To avoid a hazard due to instability of the refrigerator, it must be fixed in accordance with the installation instructions.
- Keep ventilation openings, on the refrigerator and in its enclosure or in the built-in structure, clear of obstruction.
- Do not use mechanical devices or other means to accelerate the defrosting process, other than those recommended by the manufacturer.
- Do not open or damage the refrigerant circuit under any circumstances.
- Do not use electrical devices inside the refrigerator unless they are recommended by the manufacturer for that purpose.

**Risk of injury**

- DO NOT USE OR STORE FLAMMABLE MATERIALS IN OR NEAR THIS REFRIGERATOR.
- DO NOT PLACE ARTICLES ON OR AGAINST THIS REFRIGERATOR.
- DO NOT MODIFY THIS REFRIGERATOR.

**NOTICE!**
**Damage hazard**

- Check that the voltage specification on the data plate is the same as that of the power supply.
- Do not place the refrigerator near heat sources (heaters, direct sunlight, gas ovens, etc.).
- Keep the condensate drain clean at all times.
- Do not use a high-pressure cleaner near the ventilation grille when cleaning the vehicle.
- The refrigerator may not be exposed to rain.

## Safety when operating

**DANGER! Failure to obey these warnings will result in death or serious injury.**

**Electrocution hazard**

- Do not touch exposed cables with your bare hands.
- Before starting the refrigerator, ensure that the power supply line and the plug are dry.

**CAUTION! Failure to obey these cautions could result in minor or moderate injury.**

**Health hazard**

- Ensure to put only items in the refrigerator which may be chilled at the selected temperature.
- Food may only be stored in its original packaging or in suitable containers.
- Opening the door for long periods can cause significant increase of the temperature in the compartments of the refrigerator.
- Clean regularly surfaces that can come in contact with food and accessible drainage systems.
- Store raw meat and fish in suitable containers in the refrigerator, so that it is not in contact with and cannot drip onto other food.
- If the refrigerator is left empty for long periods:
  - Switch off the refrigerator.
  - Defrost the refrigerator.
  - Clean and dry the refrigerator.
  - Leave the door open to prevent mold developing within the refrigerator.

**Risk of injury**

- Do not put your fingers into the hinge.
- Close and latch the refrigerator door before beginning a journey.
- The cooling system at the back of the refrigerator becomes very hot during operation. Protect yourself from coming into contact with hot parts when removing ventilation grilles.

**NOTICE! Damage hazard**

- Do not lean on the open refrigerator door.
- Store heavy objects such as bottles or cans only in the refrigerator door, in the vegetable compartment or on the bottom shelf.

- If the refrigerator has a double-sided door and the door is not locked correctly on the opposite side, push on that side at the top and the bottom until it locks in place.
- Ensure that the ventilation openings are not covered.
- **Danger of overheating!**
  Always ensure sufficient ventilation so that the heat generated during operation can dissipate. Ensure that the refrigerator is sufficiently far away from walls and other objects so that the air can circulate.
- Do not fill the interior with ice or fluid.
- Protect the refrigerator and the cable against heat and moisture.

**NOTE**

- If the battery management of your vehicle shuts down the refrigerator to protect the battery, contact your vehicle manufacturer.
- Put the refrigerator door and the freezer door into the winter position if the refrigerator will not be used for a longer period of time. This prevents mold from forming.
- For ambient temperatures of +15 °C to +25 °C select the average temperature setting.
- To avoid food waste, note the following:
  – Keep temperature fluctuation as low as possible. Only open the freezer as often and for as long as necessary. Store the foodstuff in such a way that the air can still circulate well.
  – If the temperature can be adjusted: Adjust the temperature to the quantity and type of the foodstuff.
  – Store the different foodstuff types as shown in the figures.
  – Foodstuff can easily absorb or release odor or taste. Always store foodstuff covered or in closed containers/bottles.

### Safety when operating with DC power

**NOTICE! Damage hazard**

- Only select operation with DC power supply if the vehicle engine is running and providing sufficient voltage, or if you are using a battery monitor.

### Safety when operating with AC power

**NOTICE! Damage hazard**

- Check that the voltage specification on the type plate is the same as that of the power supply.
- Only use the cable supplied to connect the refrigerator to the AC mains.
- Never pull the plug out of the socket by the connection cable.

## Scope of delivery

| Quantity | Description |
|---|---|
| 1 | Compressor refrigerator |
| 1 | Drain elbow |
| 1 | Short operating manual |
| 1 | Operating manual (online only) |
| 1 | Installation manual |

## Accessories

Available as accessories (not included in the scope of delivery):

| Description | Ref. no. |
|---|---|
| Sliding hinge | 9620012939 |
| Fastening frame incl. bottom frame | |
| – NRX1050 | 9620012877 |
| – NRX1060 | 9620012881 |
| – NRX1080 | 9620012882 |
| – NRX1115 | 9620012878 |
| – NRX1130 | 9620012876 |
| Fastening frame incl. bottom frame (black) | |
| – NRX1050 | 9620012874 |
| – NRX1060 | 9620012875 |
| – NRX1080 | 9620012880 |
| – NRX1115 | 9620012879 |
| – NRX1130 | 9620012883 |

| Description | Ref. no. |
|---|---|
| Shelf replacement for removed frozen compartment | |
| – NRX1050 | 9620012933 |
| – NRX1060 | 9620012938 |
| – NRX1080 | 9620012935 |
| – NRX1115, NRX1130 | 9620012932 |
| Frozen compartment | |
| – NRX1050 | 9620012931 |
| – NRX1060 | 9620012936 |
| – NRX1080 | 9620012934 |
| – NRX1115, NRX1130 | 9620012937 |
| Storage kit | 9600006299 |
| Ventilation frame (RS1650L, white) (NRX1050, 1060, 1080 only) | 9105702379 |
| Ventilation frame (RS1650L, black) (NRX1050, 1060, 1080 only) | 9105707393 |
| Ventilation grille (AS1635L, white) (NRX1050, 1060, 1080 only) | 9500000949 |
| Ventilation grille (AS1635L, black) (NRX1050, 1060, 1080 only) | 9500000951 |
| Ventilation frame + grille (LS 300 white) (NRX1115, 1030 only) | 9600003033 |
| Ventilation frame + grille (LS 300-B black) (NRX1115, 1030 only) | 9600003022 |

# Intended use

The refrigerator is intended for:

- Installation in caravans, motor homes, boats and trucks
- Cooling and storing food
- **NRX1050–1130(C/S) only**: Storing prefrozen food

This refrigerator is **not** intended for commercial, retail or household applications.

The refrigerator is **not** suitable for:

- Storing medications
- Storing corrosive substances or substances that contain solvents
- Quick-freezing food

The frozen compartment is suitable for storing prefrozen food, storing or making ice cream and making ice cubes. It is not suitable for freezing previously unfrozen food.

The refrigerator is intended for installation in a piece of cabinetry or an installation niche.

Optimum cooling performance is guaranteed at ambient temperatures between +16 °C and +43 °C and at a maximum humidity of 90 %.

This product is only suitable for the intended purpose and application in accordance with these instructions.

This manual provides information that is necessary for proper installation and/or operation of the product. Poor installation and/or improper operating or maintenance will result in unsatisfactory performance and a possible failure.

The manufacturer accepts no liability for any injury or damage to the product resulting from:

- Incorrect assembly or connection, including excess voltage
- Incorrect maintenance or use of spare parts other than original spare parts provided by the manufacturer
- Alterations to the product without express permission from the manufacturer
- Use for purposes other than those described in this manual

Dometic reserves the right to change product appearance and product specifications.

# Technical description

The refrigerator is a compressor refrigerator. The refrigerator is designed to operate with different types of power and can be run either on a DC or AC power supply.

**NRX1050–1130(C/S):** The model is factory fitted with a frozen compartment, which can be removed and reinstalled.

The refrigerator door has a latching mechanism to protect it during transport.

All materials used in the refrigerator are compatible for use with foodstuffs.

## Description of the device

| No in fig. 1, page 3 | Explanation |
|---|---|
| 1 | Door shelf |
| 2 | Bottle shelf |
| 3 | Condensate drain |
| 4 | Crisper |
| 5 | Cabinet shelf |
| 6 | Control panel with display |
| 7 | Frozen compartment |
| 8 | Door latch for ventilation |

## Control and display elements

| No in fig. 2, page 3 | Explanation |
|---|---|
| 1 | IR door opening sensor |
| 2 | ON/OFF button |
| 3 | Cooling level setting button |
| 4 | Compressor and error indicator LED |
| 5 | Operation mode button |
| 6 | Interior lighting |
| 7 | Cooling level indicator LEDs<br>Cooling Level 5<br>Cooling level 4<br>Cooling level 3<br>Cooling level 2<br>Cooling level 1 |
| 8 | Operation mode indicator LEDs |

## Compressor and error indicator LED

The compressor and error indicator LED displays the operating status of the compressor or indicates an error:

| Color | Description |
|---|---|
| White | Compressor on |
| Orange | Compressor off |
| Orange (flashing) | Error (chapter "Error indication" on page 19) |

## Operation mode indicator LEDs

The operation mode indicator LEDs display the following setting options:

| Symbol | Description |
|---|---|
| | ECO mode:<br>Operation with reduced energy consumption.<br>Cooling level 1 – 3 |
| | QUIET mode:<br>Operation with reduced noise level.<br>Cooling level 1 – 4 |
| | PERFORMANCE mode<br>Cooling level 1 – 5 |
| | FREEZER mode :<br>Operation with frozen compartment removed. Cools down the complete interior of the refrigerator to – 6 °C |
| | WINTER mode (only NRX1115–1130):<br>To ensure adequate cooling of the frozen compartment at low ambient temperatures. |

# Operation

## Before first use

**NOTE**
- Do not store goods in the refrigerator for the first 4 hours after start-up.
- When using the refrigerator for the first time, there may be a mild odor which will disappear after a few hours. Air out the living space well.
- The cooling capacity can be affected by:
  - The ambient temperature (e.g. when the vehicle is exposed to direct sunlight)
  - The amount of food to be refrigerated
  - How often you open the door

➤Clean the inside of the refrigerator for hygienic reasons (see chapter "Cleaning and maintenance" on page 16).

➤Park the vehicle so that it is level, especially when starting up and filling the refrigerator before setting off on a journey.

## Information on storing food

**CAUTION! Health hazard**
If the refrigerator is exposed to an ambient temperature below +10 °C for an extended period of time, regulation of the frozen compartment temperature can no longer be guaranteed. That may cause the temperature of the frozen compartment to increase and the stored goods to be defrosted.

**NOTICE! Damage hazard**
- Observe the maximum load per door shelf and door when filling the refrigerator (see chapter "Technical data" on page 20).
- Do not keep carbonated drinks in the frozen compartment.

➤Store food as shown in fig. **3**, page 4.

## Saving energy

- Only open the refrigerator as often and for as long as necessary.
- Allow warm food to cool down first before placing it in the device to keep cool.
- Defrost your refrigerator as soon as a layer of ice forms.
- Avoid unnecessarily low temperature settings.
- For optimal energy consumption, position the shelves and drawers according to their position on delivery.
- On a regularly basis, make sure the door seal still fits properly.
- Clean dust and dirt from the condenser at regular intervals.

## Opening the refrigerator door

**NOTE**
Ensure to pull the handle on the opposite side to the door stop. Note the respective position of the slider. Refer to the associated installation manual.

➤To open the refrigerator door proceed as shown in fig. **4**, page 4.

## Closing and securing the refrigerator door

**CAUTION! Risk of injury**
If the door is not secured correctly, carefully push on the top and bottom of the door until it is secured in place.

**NOTE**
The refrigerator door has a latching mechanism which is also used to protect it during transport.

➤Press the door shut until you clearly hear it click at the top and bottom (fig. **5**, page 4).

✓ The door is now closed and secured.

## Switching on and off

**NOTE**
Always switch off the refrigerator if you are not going to use it for a prolonged period of time.

➤To switch on, press and hold the ⏻ button once for at least 2 seconds.

✓ The refrigerator switches on with the last selected cooling level setting and operation mode.

➤ To switch off, press and hold the ⏻ button for at least 2 seconds.

## Setting the operation modes

**NOTE**
When using the ECO, PERFORMANCE, FREEZER or WINTER mode the system stays in this mode until further changes.

➤ To set the operation mode, press the ⇕ button repeatedly until the operation mode indicator LED for the desired operation mode lights up.

The following operation modes are available:

### Using the ECO mode

With ECO mode activated the refrigerator operates with reduced energy consumption at cooling levels 1 – 3.

✓ Operation mode indicator LED for ECO mode (🍃) and selected cooling level indicator LED light up.

### Using the QUIET mode

With QUIET mode activated the refrigerator operates with reduced noise level at cooling levels 1 – 4.

**NOTE**
- The QUIET mode is not available if the refrigerator is running in FREEZER mode.
- When using the QUIET mode the refrigerator will stay in this mode for 8 hours and then return to the previously selected mode (ECO or PERFORMANCE mode).

✓ Operation mode indicator LED for QUIET mode (🔇) and selected cooling level indicator LED light up.

### Using the PERFORMANCE mode

With PERFORMANCE mode activated the refrigerator operates in standard mode at cooling levels 1 – 5.

✓ Operation mode indicator LED for PERFORMANCE mode (📈) and selected cooling level indicator LED light up.

### Using the FREEZER mode

With FREEZER mode activated the complete interior of the refrigerator is cooled to – 6 °C.

**NOTE**
- Remove the frozen compartment to use FREEZER mode.
- The FREEZER mode is not available if the refrigerator is running in WINTER mode.

✓ Operation mode indicator LED for FREEZER mode (❄) and all cooling level indicator LEDs light up continuously.

## Using the WINTER mode for operation at low ambient temperatures (only NRX1115–1130)

**NOTE**
- Cold air can impact the performance of the cooling unit. Activate the WINTER mode if you notice a loss of cooling capacity in the frozen compartment.
- Deactivate the WINTER mode as soon as the ambient temperature rises to +16 °C to avoid higher power consumption.
- The WINTER mode is not available if the refrigerator is running in FREEZER mode.

➤ To activate or deactivate WINTER mode proceed as shown in fig. **6**, page 5.

✓ Operation mode indicator LED for FREEZER mode (❄) lights up green and selected cooling level indicator LED remains on.

## Setting the cooling level

To avoid food waste, note the following:

- Keep temperature fluctuation as low as possible. Only open the refrigerator as often and for as long as necessary. Store the foodstuff in such a way that the air can still circulate well.

- Adjust the temperature to the quantity and type of the foodstuff.
- Store the different foodstuff types as shown in the figures.
- Foodstuff can easily absorb or release odor or taste. Always store foodstuff covered or in closed containers/bottles.

➤To set the cooling level, press the (🌡) button repeatedly until you reach the desired cooling level.

### Repositioning the shelves

**WARNING! Risk of child entrapment**
**NRX1060–1130** All shelves are fixed in place to prevent children from climbing into the refrigerator.
- Only remove the shelves for cleaning purposes.
- Refit the shelves and secure them in place.

**NOTE**
Remove the frozen compartment before repositioning the shelves for easier access to the rear shelf knobs.

➤To reposition the shelves as desired proceed as shown in fig. **7**, page 5 to fig. **8**, page 6.

### Removing the frozen compartment

**NOTICE! Damage hazard**
- Close the frozen compartment door to remove the frozen compartment.
- Grasp the frozen compartment by the bottom. Do not pull on the frozen compartment door.
- Store the frozen compartment in a dry and safe place.

➤To remove the frozen compartment proceed as shown in fig. **9**, page 6.

## Cleaning and maintenance

**WARNING! Electrocution hazard**
Always disconnect the refrigerator from the energy supply before cleaning and servicing it.

**NOTICE! Damage hazard**
- Do not use abrasive cleaning agents or hard objects during cleaning.
- Never use hard or sharp tools to remove ice or to free frozen objects.
- Ensure that no water drips into the seals. This can damage the electronics.

**NOTICE! Damage hazard**
The light source can only be replaced by the manufacturer, a service agent or similarly qualified person to avoid hazard.

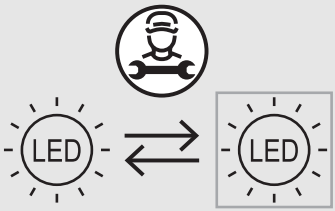


➤Clean the device interior and exterior regularly with a damp cloth and as soon as it becomes dirty.

➤Wipe the refrigerator dry with a cloth after cleaning.

➤Check the condensate drain regularly.
Clean the condensate drain when necessary. If it is blocked, the condensate collects on the bottom of the refrigerator.

### Refrigerant circuit

The refrigerant circuit is maintenance-free.

### Defrosting the refrigerator

**NOTICE! Damage hazard**
Do not use any mechanical tools or any other tools to speed up the defrosting process.

**NOTE**
Over time, frost builds up on the back wall inside the refrigerator. If this layer of frost is about 3 mm thick, defrost the refrigerator.

➤To defrost the refrigerator proceed as shown in fig. **10**, page 7.

### Positioning the refrigerator door into winter position

**CAUTION! Risk of injury**
The winter position may **not** be used while driving.

**NOTE**
Put the refrigerator door into the winter position if you are not going to use the device for a longer period of time. This prevents mold from forming.

1. Defrost the refrigerator (see chapter "Defrosting the refrigerator" on page 16).
2. Put the refrigerator door into winter position as shown in fig. **11**, page 8 to fig. **12**, page 8.

## Troubleshooting

**NOTE**
To safely operate 12 V consumer units in the caravan while driving, it must be ensured that the towing vehicle provides sufficient voltage. On some vehicles, the battery management system may automatically switch off the consumer units to protect the battery. Ask your vehicle manufacturer for more information.

| Fault | Possible cause | Suggested remedy |
|---|---|---|
| The refrigerator does not work. | The fuse in the DC cable is defective. | The fuse must be replaced.<br>Contact an authorized service agent. |
| | The vehicle fuse has blown. | Replace the vehicle fuse. (Refer to the operating manual of your vehicle.) |
| | The vehicle battery is discharged. | Test the battery and charge it. |
| | The ignition is not switched on. | Switch on the ignition. |
| | The temperature at the compressor is too low (<0 °C). | Close/cover all external ventilation grilles completely with insulation material. |
| | The refrigerator switches off automatically if the voltage is insufficient.<br>(Cut-off voltage: 10.4 V) | Load the battery. The refrigerator will start again automatically.<br>(Cut-in voltage: 11.7 V) |

| Fault | Possible cause | Suggested remedy |
|---|---|---|
| Poor cooling, increase in interior temperature. Compressor runs continuously. | The ventilation around the cooling unit is not sufficient. | Check that the ventilation grille is not obstructed. Move the refrigerator to another location. |
| | The interior walls are iced up. | Check whether the refrigerator door closes properly. Ensure that the refrigerator seal fits correctly and is not damaged. Defrost the refrigerator. |
| | The temperature is set too high. | Set a lower temperature. |
| | The ambient temperature is too high. | Remove the ventilation grille for a while so that warm air can escape quicker. |
| | Too much food was placed in the refrigerator at the same time. | Remove some of the food. |
| | Too much warm food was placed in the refrigerator at the same time. | Remove the warm food and leave it to cool down before putting it in again. |
| | The refrigerator has not been operating for very long. | Check the temperature again after four or five hours. |
| | The condenser is dirty. | Clean the condenser. |
| | The fan is defective. | Replace the fan. |
| Poor cooling, increase in interior temperature. Compressor does not run often. | The battery capacity is exhausted. | Charge the battery. |
| Poor cooling, increase in interior temperature.Compressor does not run (battery connection). | There is an interruption in the battery – electronics connection. | Establish a connection. |
| | The main switch is defective (if installed). | Replace the main switch. |
| | The additional supply line fuse has blown (if installed). | Replace the supply line fuse. |
| | The battery voltage is too low. | Charge the battery. |
| | The battery capacity too low. | Replace the battery. |
| | The cables are loose.<br>The contact is poor (corrosion). | Establish a connection. |
| | The cable cross section is too small. | Replace the cable. |
| | The compressor is defective. | Contact an authorized service agent. |

| Fault | Possible cause | Suggested remedy |
|---|---|---|
| Poor cooling, increase in interior temperature.Compressor does not run (connection to AC supply). | The connection supply line is interrupted. | Establish a connection. |
| | The main switch is defective (if installed). | Replace the main switch. |
| | The additional supply line fuse has blown (if installed). | Replace the supply line fuse. |
| | The compressor is defective. | Contact an authorized service agent. |
| Unusual noises. | A component of the refrigerant circuit cannot move freely (touching the wall). | Bend the component carefully away from the obstruction. |
| | There is a foreign object stuck between the cooling unit and the wall. | Remove the foreign object. |
| | Fan noise. | Replace the fan. |

## Error indication

**NOTE**

- All errors are indicated by the error indicator LED flashing red (see chapter "Control and display elements" on page 13). The number of flashes depends on the type of fault. Each flash lasts for one quarter of a second. After the sequence of flashes a pause follows.The sequence for the fault is repeated every four seconds.
- In ECO, PERFORMANCE and FREEZER mode, an additional beep sounds.

| Flashing frequency | Error | Possible cause |
|---|---|---|
| 1 | Under or over voltage | The supply voltage is outside of the set range. |
| 2 | Excessive fan current | The fan load on the electronics unit is more than 1 A. |
| 3 | The motor doesn't start | The rotor is jammed.<br>The pressure difference in the cooling system is too high. |
| 4 | Speed too low | If the cooling system is overloaded, the minimum speed of the motor cannot be maintained. |
| 5 | Overheating of the electronics unit | If the cooling system is loaded too heavily or the temperature is set too high, the electronics can overheat. |
| Constantly | Temperature sensor errors | Temperature sensor is defective. |

# Warranty

If the product does not work as it should, please contact your retailer or the manufacturer's branch in your country (see dometic.com/dealer). The warranty applicable to your product is 3 year(s).

For repair and warranty processing, please include the following documents when you send in the device:

- A copy of the receipt with purchasing date
- A reason for the claim or description of the fault

### Australia only

Our goods come with guarantees that cannot be excluded under the Australian Consumer Law. You are entitled to a replacement or refund for a major failure and for compensation for any other reasonably foreseeable loss or damage. You are also entitled to have the goods repaired or replaced if the goods fail to be of acceptable quality and the failure does not amount to a major failure.

### New Zealand only

This warranty policy is subject to the conditions and guarantees which are mandatory as implied by the Consumer Guarantees Act 1993(NZ).

### Local support

Please find local support at the following link address: dometic.com/dealer

# Disposal

**NOTICE!**
The insulation of the cooling device contains flammable cyclopentane and requires special disposal procedures. Deliver the cooling device at the end of its life-cycle to an appropriate recycling center.

- ➤ Place the packaging material in the appropriate recycling waste bins wherever possible.
- ➤ Consult a local recycling center or specialist dealer for details about how to dispose of the product in accordance with the applicable disposal regulations.

# Technical data

This device complies with UN ECE Regulation R10.

| | NRX1050(C/S) | NRX1060(C/S) |
|---|---|---|
| Capacity | | |
| – Refrigerator compartment (only NRX1050–1130[C/S]) | 39.6 l | 48.9 l |
| – Frozen compartment (only NRX1050–1130[C/S]) | 4.4 l | 6.1 l |
| – Total capacity | 44.0 l | 55.0 l |
| – Total capacity (frozen compartment removed) | 46.0 l | 58.0 l |
| Connection voltage | 12/24 V⎓<br>100 – 240 V~ | |
| Supply battery protection (12 V) | | |
| – Cut-off voltage | 10.4 V | |

| | NRX1050(C/S) | NRX1060(C/S) |
|---|---|---|
| – Cut-in voltage | 11.7 V | |
| Supply battery protection (24 V) | | |
| – Cut-off voltage | 22.8 V | |
| – Cut-in voltage | 24.2 V | |
| Climate class | T | |
| Storage temperature range | | |
| – Refrigerator | 0 °C to +12 °C | |
| – Frozen compartment (only NRX1050–1130[C/S]) | –15 °C to –5 °C | |
| – Freezer mode (only NRX1050–1130[C/S]) | –6 °C | |
| Intended ambient temperature use | +16 °C to +43 °C | |
| Refrigerant | R134a | |
| Refrigerant quantity | 26 g | 30 g |
| $CO_2$ equivalent | 0.037 t | 0.043 t |
| Global warming potential (GWP) | 1430 | |
| Noise emission (EN 60704) | 40 – 45dB(A) | |
| Dimensions H x W x D (in mm) | 525 x 380 x 510 | 525 x 448 x 537 |
| Net weight | 17.0 kg | 17.0 kg |
| Maximum load | | |
| – Per door shelf | 4.0 kg | 5.0 kg |
| – Per door | 8.0 kg | 10.0 kg |
| Inspection/certification: |  | |

| | NRX1080(C/S) | NRX1115(C/S) | NRX1130(C/S) |
|---|---|---|---|
| Capacity | | | |
| – Refrigerator compartment (only NRX1050 – 1130[C/S]) | 68.4 l | 104.5 l | 118.0 l |
| – Frozen compartment (only NRX1050–1130[C/S]) | 6.6 l | 8.2 l | 8.2 l |
| – Total capacity | 75.0 l | 113.0 l | 126.0 l |
| – Total capacity (frozen compartment removed) | 78.0 l | 116.0 l | 130.0 l |
| Connection voltage | 12/24 V⎓<br>100 – 240 V~ | | |

| | NRX1080(C/S) | NRX1115(C/S) | NRX1130(C/S) |
|---|---|---|---|
| Supply battery protection (12 V)<br>– Cut-off voltage<br>– Cut-in voltage | 10.4 V<br>11.7 V | | |
| Supply battery protection (24 V)<br>– Cut-off voltage<br>– Cut-in voltage | 22.8 V<br>24.2 V | | |
| Climate class | T | | |
| Storage temperature range<br>– Refrigerator<br>– Frozen compartment (only NRX1050–1130[C/S])<br>– Freezer mode (only NRX1050–1130C/S) | 0 °C to +12 °C<br>–15 °C to –5 °C<br>–6 °C | | |
| Intended ambient temperature use | +16 °C to +43 °C | | |
| Refrigerant | R134a | | |
| Refrigerant quantity | 32 g | 40 g | 40 g |
| CO2 equivalent | 0.046 t | 0.057 t | 0.057 t |
| Global warming potential (GWP) | 1430 | | |
| Noise emission (EN60704) | 40 – 45dB(A) | | |
| Dimensions H x W x D | 625 x 475 x 537 mm | 745 x 525 x 568 mm | 812 x 525 x 568 mm |
| Net weight | 20.0 kg | 25.0 kg | 26.0 kg |
| Maximum load<br>– Per door shelf<br>– Per door | <br>5.0 kg<br>10.0 kg | <br>6.0 kg<br>18.0 kg | <br>6.0 kg<br>18.0 kg |
| Inspection/certification: |  | | |

DOMETIC

**dometic.com**

**YOUR LOCAL DEALER**

**dometic.com/dealer**

**YOUR LOCAL SUPPORT**

**dometic.com/contact**

**YOUR LOCAL SALES OFFICE**

**dometic.com/sales-offices**

4445103633 2023-06-18

A complete list of Dometic companies, which comprise the Dometic Group, can be found in the public filings of:
**DOMETIC GROUP AB** Hemvärnsgatan 15 SE-17154 Solna Sweden