Continental®
Refrigerator

INSTALLATION AND OPERATIONS **MANUAL**



INCLUDES
R290
MODELS

Refrigerated Griddle Stands

Refrigerators & Freezers

SCAN this code
to download manual

Please fill in the following information for your NEW unit, carefully read the instructions in this manual and file it for future reference.

MODEL NO. _____

SERIAL NO. _____

PURCHASED FROM _____

INSTALL DATE _____

1-800-523-7138

Continental Refrigerator
A Division of Aeritek
539 Dunksferry Road
Bensalem, PA 19020-5908
P 215-244-1400
F 215-244-9579
www.continentalrefrigerator.com

Continental®
Refrigerator

Some models utilize R-290 refrigerant, which is flammable.
Refer to data tag to see what refrigerant is used on your product of choice.

REFER HERE FOR REFRIGERANT TYPE. IF **R-290**, SEE BELOW.

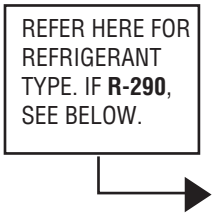

Continental Refrigerator
Bensalem, PA 19020-5908
215-244-1400 • 800-523-7138 • FAX: 215-244-9579
Division of National Refrigeration and Air Conditioning Products, Inc.

MODEL SERIAL

POWER SUPPLY WIRES VOLTS ~ Hz. PH.
VOLTS ~ HERTZ PHASE AMPS.
CABINET
COND. UNIT

DEFROST
REFRIGERANT TYPE - AMOUNT OZS.
GRAMS
DESIGN PRESSURE LIMIT KPa LOW SIDE KPa HIGH SIDE
COMMERCIAL REFRIGERATOR FREEZER
CLIMATE CLASS 5
CONFORMS TO U.L. STD. 60335-1 & 60335-2-89
CERTIFIED TO CSA STD. C22.2 No. 60335-1 & 60335-2-89
C ETL US LISTED Intertek 53533
IMPORTANT NOTICE: FOR WARRANTY PARTS AND SERVICE AUTHORIZATION
CALL THE SERVICE DEPARTMENT AT 1-800-523-7138
P/N 5-755

WARNING: Do not damage the refrigerant circuit. Do not store explosive substances, such as aerosol cans with flammable propellant, in this appliance. Component parts shall be replaced with like components and servicing shall be done by authorized service personnel to reduce the risk of possible ignition.

FOR FLAMMABLE (R-290) REFRIGERANT ONLY:

WARNING: KEEP CLEAR OF OBSTRUCTION ALL VENTILATION OPENINGS IN THE APPLIANCE ENCLOSURE OR IN THE STRUCTURE FOR BUILDING-IN.

WARNING: DO NOT USE MECHANICAL DEVICES OR OTHER MEANS TO ACCELERATE THE DEFROSTING PROCESS, OTHER THAN THOSE RECOMMENDED BY THE MANUFACTURER.

WARNING: DO NOT USE ELECTRICAL APPLIANCES INSIDE THE FOOD/ICE STOAGE COMPARTMENTS UNLESS THEY ARE OF THE TYPE RECOMMENDED BY THE MANUFACTURER.

DANGER: RISK OF FIRE OR EXPLOSION. FLAMMABLE REFRIGERANT USED. TO BE REPAIRED ONLY BY TRAINED SERVICE PERSONNEL. DO NOT PUNCTURE REFRIGERANT TUBING.

CAUTION: RISK OF FIRE OR EXPLOSION. FLAMMABLE REFRIGERANT USED. CONSULT REPAIR MANUAL, OWNERS GUIDE BEFORE ATTEMPTING TO SERVICE THIS PRODUCT. ALL SAFETY PRECAUTIONS MUST BE FOLLOWED.

CAUTION: RISK OF FIRE OR EXPLOSION. DISPOSE OF PROPERLY IN ACCORDANCE WITH FEDERAL OR LOCAL REGULATIONS. FLAMMABLE REFRIGERANT USED.

CAUTION: RISK OF FIRE OR EXPLOSION DUE TO PUNCTURE OF REFRIGERANT TUBING; FOLLOW HANDLING INSTRUCTIONS CAREFULLY. FLAMMABLE REFRIGERANT USED.

CAUTION: THIS APPLIANCE IS NOT INTENDED FOR USE BY PERSONS (INCLUDING CHILDREN) WITH REDUCED PHYSICAL, SENSORY, OR MENTAL CAPABILITIES, OR LACK OF EXPERIENCE AND KNOWLEDGE, UNLESS THEY HAVE BEEN GIVEN SUPERVISION OR INSTRUCTION CONCERNING THE USE OF THE APPLIANCE BY A PERSON RESPONSIBLE FOR THEIR SAFETY.

CAUTION: CHILDREN SHOULD BE SUPERVISED TO ENSURE THEY DO NOT PLAY WITH THE APPLIANCE

	[symbol IEC 60417-5031 (2002-10)]	direct current
	[symbol IEC 60417-5032 (2002-10)]	alternating current
	[symbol IEC 60417-5019 (2006-08)]	protective earth
	[symbol IEC 60417-5018 (2006-10)]	functional earthing
	[symbol IEC 60417-5016 (2002-10)]	fuse-link

NOTE 1 The **rated current** of the fuse link may be indicated in association with this symbol.

	[symbol IEC 60417-5012 (2002-10)]	lamp
	[symbol ISO 7000-0434A (2004-01)]	caution
	[symbol ISO 7000-0790 (2004-01)]	read operator's manual
	[symbol IEC 60417-5021 (2002-10)]	equipotentiality
	[symbol IEC 60417-5036 (2002-10)]	dangerous voltage
		flammable refrigerant

WARNING

Do not use means to accelerate the defrosting process or to clean, other than those recommended by the manufacturer.

The appliance shall be stored in a room without continuously operating ignition sources (for example: open flames, an operating gas appliance or an operating electric heater.

Do not pierce or burn.

Be aware that refrigerants may not contain an odour.

TABLE OF **CONTENTS**

Page

Receiving Your New Model **5**
General Information and Important Operating Facts **5**
Serial Data Tag 5
Uncrating Your New Model **5**
Installation and Location **6**
Ventilation 6
Floor Loads 7
Caster Support Plates 7
Condensate Removal 8
Removal of Drawers and Drawer Adjustments 9
Removal and Replacement of Drawer Cage 9
Initial Cleaning Procedure **9**
Start-Up Procedure **10**
Electrical Connections 10
Start-Up Checklist 10
Operation with Mechanical Thermostat **11**
Thermometer and Adjustment 11
Refrigeration System and Adjustment 11
Evaporator Assembly 12
Freezer System and Adjustment 12
Operation with Electronic Control **12**
Electronic Control Display and Buttons 12
Initial Sequence of Operation 13
How to Calibrate the Electronic Control 13
How to Change the Set-Point 13
How to Switch Controller Off/On 13
Anti-Condensate Control (On) 13
How to Initiate a Manual Defrost 14
How to Change the Defrost Interval 14
High and Low Temperature Alarm 14
Electronic Control Error Codes 14
Maintenance **15**
Periodic Cleaning Procedure 15
General Preventative Maintenance 15
Care and Cleaning of Stainless Steel 16
Parts and Service **17**
Placing a Service Call 17
Obtaining Replacement Parts Under Warranty 18
Obtaining Replacement Compressor Under Warranty 18
End-of-Life Disposal of Refrigerated Equipment 19
Optional Accessories **20**
Installing Electric Condensate Heater 20
Dial Thermometer and Calibration 21
Digital Thermometer and Calibration 21
Door Adjustment 21
Hinge Tension Adjustment 22
Removal and Replacement of Doors 23
Re-Hinging Doors 23
Installing Legs and Leveling 23
Remote Set-Up and Installation Guidelines 23
Troubleshooting and Servicing Guide **26**
Warranty **29**

RECEIVING YOUR NEW MODEL

Congratulations on your purchase of Continental Refrigerator superior foodservice equipment! When your shipment arrives, thoroughly examine the packaging for any punctures, dents or signs of rough handling. It is in your best interest to partially remove or open the shipping container to examine the contents for any missing accessories or concealed damage which may have occurred during shipment. If the cabinet is damaged, it must be noted on the carrier's delivery slip or bill of lading and a Freight Claim must be filed with the shipping company. **FREIGHT DAMAGE IS NOT COVERED UNDER WARRANTY**.

GENERAL INFORMATION AND IMPORTANT OPERATING FACTS

This manual has been compiled to aid in the installation, operation and maintenance of your equipment. Please read it and familiarize yourself with your equipment, its operation and available accessories, to enjoy optimum performance.

This equipment is prohibited from use in California with any refrigerants on the "List of Prohibited Substances" for that specific end-use, in accordance with California Code of Regulations, title 17, section 95374. This disclosure statement has been reviewed and approved by NRAC, Inc. and NRAC, Inc. attests, under penalty of perjury, that these statements are true and accurate.

SERIAL DATA TAG

A serialized data tag is located inside the machine compartment, on the wall next to refrigerated compartment (**see Figure 1**). In addition to identifying the specific product, this label provides important information regarding electrical requirements and refrigeration charge, as well as agency listings and factory contacts.

FIGURE 1: Data Tag

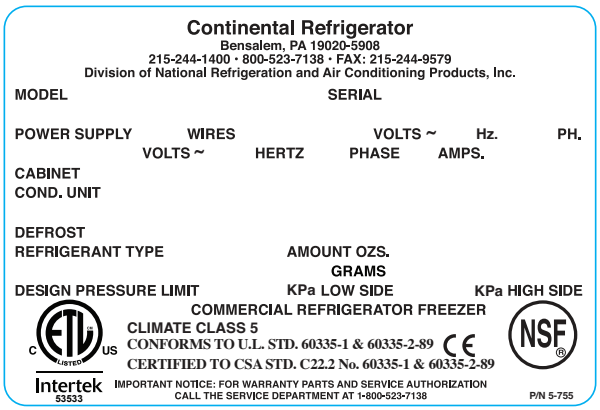

IMPORTANT NOTE: The model and serial number should be noted on the front cover of this manual, in the spaces provided. If parts or service are ever needed for your unit, this information will be required to verify warranty status and to properly identify any parts that may be needed.

All cabinets must be given sufficient time to reach normal operating temperature before placing any food inside cabinet or pans (if equipped). For refrigerators, approximately 1 hour of operation is required to lower the cabinet and pan temperature to 40°F (4°C). Freezers require approximately 2 hours of operation to lower the cabinet temperature to 0°F (-18°C) (**see "Operation" section for further information**).

Prior to factory shipping, all products are performance-run tested for a minimum of 12 hours providing a highly sophisticated temperature recording exclusive to each individual cabinet. This recording is supplied within this manual packet. A final evaluation, including analysis of cabinet performance, leak check, vibration, noise level and visual examination is made by a qualified quality control team to assure a superior product. The carrier signs to this effect when they accept the product for shipping. To insure the maximum in safety and sanitation, all models are listed under applicable Underwriters Laboratories and National Sanitation Foundation standards.

CAUTION

RISK OF ELECTRICAL SHOCK
KEEP ELECTRICAL COMPONENTS AND CONTROLS DRY - DO NOT SPRAY WITH WATER!
FAILURE TO FOLLOW THESE INSTRUCTIONS CAN CAUSE A HAZARD & VOID FACTORY WARRANTY.

UNCRATING YOUR NEW MODEL

IMPORTANT: Your equipment should never be transported on legs/casters unless the cabinet bottom is properly supported. Consult the factory for more information.

The shipping container should remain on your cabinet to avoid dents or scratches while transporting to the actual set-up location. All shelving, accessories and legs or casters are carefully packaged and secured inside your cabinet to prevent damage. After moving unit to its final location, remove all the staples from around the bottom of the crate using a pry bar. Slide the cardboard carton up and off the unit, being careful not to rub against the cabinet. Remove any accessories or boxes on the skid. Dispose of all packaging materials properly.

Four (4) bolts secure the cabinet to the wooden skid. The bolts are located at each end on the underside of the skid. In order to remove these bolts, tilt the cabinet backwards and place wooden blocks at each end in order to hold it in its tilted position. Using a ¾" socket or open end wrench, remove the bolts and carefully slide the cabinet off of the skid. After skid removal, the cabinet should never be moved without dollies or rollers to avoid damage to the cabinet bottom or floor.

IMPORTANT NOTE: Do not under any circumstances, lay your new model on its front or sides. For a brief period of time, you may lay the cabinet on its back, but only when its properly blocked, with clearance for your hands, in order to set it in its upright position without damaging the cabinet. **Do not plug in and operate model for at least three (3) hours after cabinet is set upright from being on its back as this can damage the compressor.**

INSTALLATION AND LOCATION

Before moving the cabinet to its final point of installation, measure all doorways or passages to assure clearance.

IMPORTANT NOTE: COMPONENT PARTS SHALL BE REPLACED WITH LIKE COMPONENTS AND SERVICING SHALL BE DONE BY AUTHORIZED SERVICE PERSONNEL TO REDUCE THE POSSIBLE RISK OF IGNITION.

IMPORTANT NOTE: THE APPLIANCE IS TO BE INSTALLED IN ACCORDANCE WITH THE SAFETY STANDARD FOR REFRIGERATION SYSTEMS, ANSI/ASHRAE 15. REFER TO THE DATA TAG FOR REFRIGERANT AMOUNT. IF THE APPLIANCE HAS A REFRIGERANT CHARGE OF MORE THAN 114 GRAMS, THE APPLIANCE SHALL NOT BE INSTALLED IN PUBLIC CORRIDORS OR LOBBIES

VENTILATION

The final location site of your air cooled refrigerator or freezer must provide a sufficient quantity of cool, clean air. All refrigeration systems operate more efficiently and trouble-free with cool, dry air circulation. Avoid locations near heat and moisture generating equipment including ovens, fryers, dishwashers, steam kettles, etc. Do not install in direct sunlight (where temperatures may exceed 100°F) or in an unheated area (where temperatures may drop below 55°F).

Air supply to the condensing unit is critical. Restricting airflow places excessive heat load on the unit, adversely affecting its operation and may cause premature failure. The condenser coil must be kept clean and free from obstruction. Condenser air filters are not recommended, since they hinder airflow, especially if they are not replaced frequently. Contact our factory Service Department for more information.

IMPORTANT NOTE:

HEAT-GENERATING EQUIPMENT (GRIDDLES, BROILERS, TOASTERS, ETC.) MUST HAVE A MINIMUM 4" CLEARANCE TO THE TOP OF YOUR REFRIGERATED CABINET. TEMPERATURES AT TOP SURFACE SHOULD NOT EXCEED 100°F, OR DAMAGE CAN OCCUR, WHICH MAY VOID YOUR WARRANTY. A HEAT SHIELD (BY OTHERS) MAY BE USED TO PROTECT YOUR CABINET. CONTACT YOUR EQUIPMENT DEALER OR FACTORY FOR MORE INFORMATION.

All griddle stand models are front breathing - they take in and exhaust air through the front grill, so clearance is not required around the sides or back. 3" spacing is recommended between the end of your refrigerator and adjacent equipment, when possible, for optimum performance. But air flow through the front grill cannot be restricted at any time.

FIGURE 2: Minimum Clearance Dimensions for Optimum Conditions

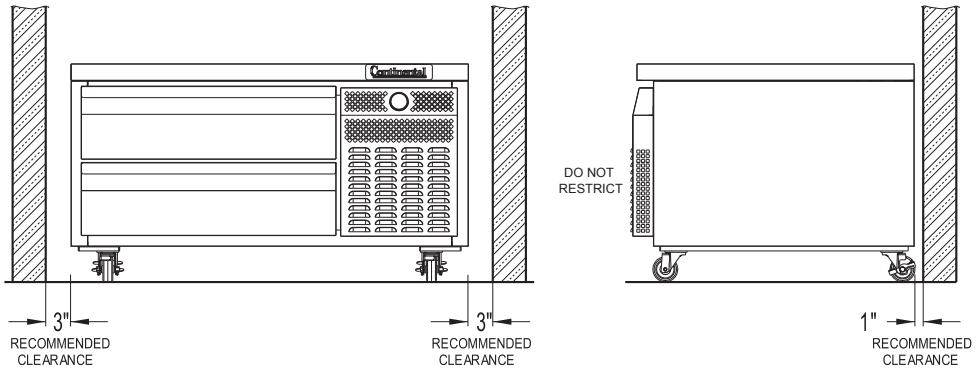

IMPORTANT NOTE: For maximum efficiency, your new cabinet must be located where an unrestricted air supply can circulate through the front grill. Never place or store anything inside the compressor compartment. These rules are essential for long life. **FAILURE TO FOLLOW THESE GUIDELINES MAY VOID YOUR WARRANTY**.

FLOOR LOADS

The floor at the final location site must be level, free of vibration and strong enough to support the total combined weights of your new model plus the maximum product load which might be placed into it. Keep in mind that all the weight is concentrated at the caster or leg locations. To estimate the possible product weight, assume that each cubic foot of storage space weighs approximately 35 pounds. Multiply 35 pounds by the amount of cubic feet in the cabinet to obtain the product load weight.
For example, a 20 cubic foot refrigerator can hold approximately 700 pounds of product (35 x 20). Assuming the cabinet itself weighs 300 pounds, the total combined weight of cabinet and product is approximately 1000 pounds. Therefore, the floor in this example must be able to support up to 1000 pounds.

NOTE: Any equipment placed on your cabinet must be included in the floor load calculation. Do NOT overload the top of your cabinet by placing extremely heavy equipment on it, or damage can occur, which is NOT covered under Warranty. Griddle Stand models are designed to support equipment such as griddles or broilers. Consult the factory for information on the weight load capacity for your specific cabinet.

CASTER SUPPORT PLATES

For maximum weight capacity, all Griddle Stand models are shipped with caster support plates, packed inside the accessory carton of your cabinet.

Each caster support plate assembly is made of heavy gauge galvanized steel, with casters permanently attached to it for maximum rigidity. The plate has a series of holes that will allow you to fasten the plate assembly to the bottom of the cabinet with sheet metal screws and bolts **(see Figure 3)**. Contact the factory to obtain the correct parts for your model.

IMPORTANT NOTE: Always wear proper work gloves and use appropriate safety equipment. You may **CAREFULLY** lay the cabinet on it's back, but only **FOR A BRIEF PERIOD OF TIME**. Caution must be taken to ensure you **DO NOT DAMAGE** the cabinet, refrigeration system components or copper tubing. The cabinet must be properly blocked, to allow room to get your hands in to lift without damaging the cabinet. **DO NOT PLUG-IN OR OPERATE THE REFRIGERATION SYSTEM FOR AT LEAST THREE (3) HOURS AFTER THE UNIT HAS BEEN RETURNING IT TO AN UPRIGHT POSITION, AS THIS CAN DAMAGE THE COMPRESSOR.**

To install caster support plate assemblies, you will need a 3/4" open end wrench (or a large adjustable wrench), a drill with a 1/8" bit and a Phillips bit (or a Phillips-Head screwdriver). A 1/2-13 thread tap is also recommended, to repair any damage to the threaded inserts in the cabinet from the shipping bolts. If a caster or threaded insert has been stripped or cross-threaded, it may be necessary to use a wrench to loosen the caster.

Place wooden blocks behind the cabinet and carefully tilt the cabinet back, using the wood blocks to help hold the cabinet in its tilted position. Hold one of the support plate assemblies under the cabinet as shown (**see Figure 3**). Position it so the holes at the end of the plate line up with the threaded inserts in the bottom of the cabinet. Attach the plate assembly to the cabinet by putting a 1/2" x 1-3/4" long bolts and flat washer through the hole in the support plate and screwing into each of the threaded inserts in the bottom of the cabinet. If one of the threaded inserts is stripped or damaged, a thread tap should be used to clean the threads.

FIGURE 3: Caster Support Plates

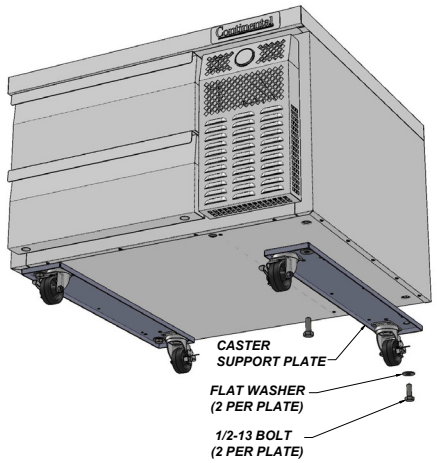

Tighten the 1/2" bolts. Repeat these steps to attach the additional caster support plate(s) to the cabinet.

Check that all caster support plates are secure and the casters turn and swivel freely. Carefully return the cabinet to upright position and double check that the support plates are secure and the cabinet is stable. Wait at least 2 hours before turning the refrigeration system back on, and another 30 minutes for the cabinet to come down to temperature and stabilize, before reloading product.

CONDENSATE REMOVAL

No floor drains or plumbing connections are required since all models use an automatic condensate water evaporating system (**see Figure 4**) which is completely self-contained and no further assembly or maintenance is required. In some adverse conditions such as high ambient temperature, high humidity, extremely heavy usage, frequent loading for prolonged periods of time, or heavy pan loading, the amount of condensate water generated could overflow the pan. If this occurs, the plastic drain tube from the cabinet can be diverted directly to a floor drain, bypassing the condensate pan. Alternatively, an optional electric condensate vaporizer may be purchased as an accessory. A condensate heater is also supplied with all remote models. To install the optional condensate heater, follow the steps for (**"Installing Electric Condensate Heater" in the "Optional Accessories" section**) towards the back of this manual.

FIGURE 4: Griddle Stand Components (Exploded View)

Front View

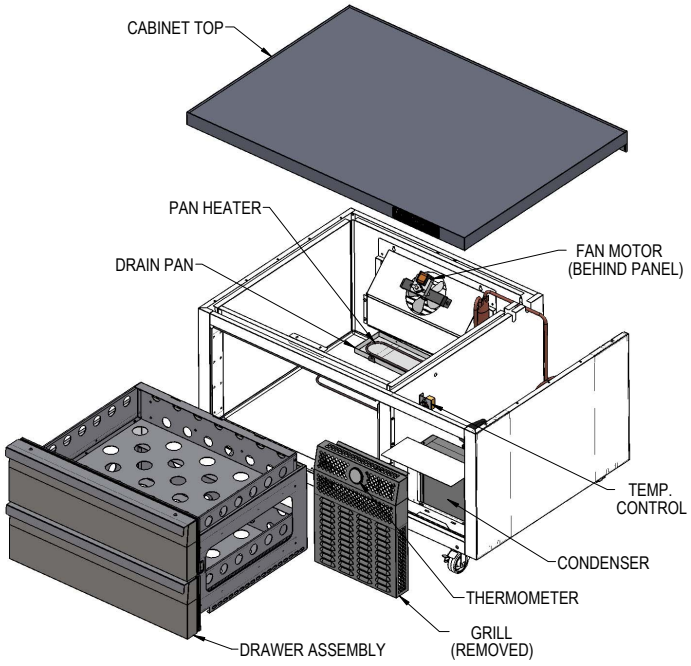

Back View

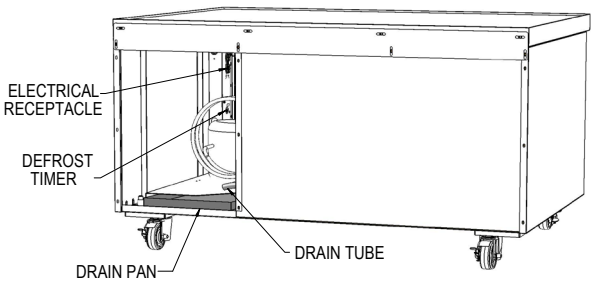

REMOVAL OF DRAWERS AND DRAWER ADJUSTMENTS

To remove the drawers from the cabinet, slide each drawer out until it stops. Unhook the stop clip at the front of the left and right-hand drawer slide (**see Figure 5**) by pushing the clip forward and pressing down on the top back edge as shown. Lift the drawer slightly as you pull it the rest of the way out. **Larger drawers may require two people.** The center member, with the wheels attached, will remain in the cabinet. To remove a drawer center member for cleaning or maintenance, pull it out and push up on the release lever at the back, as shown.

FIGURE 5: Drawer Slide

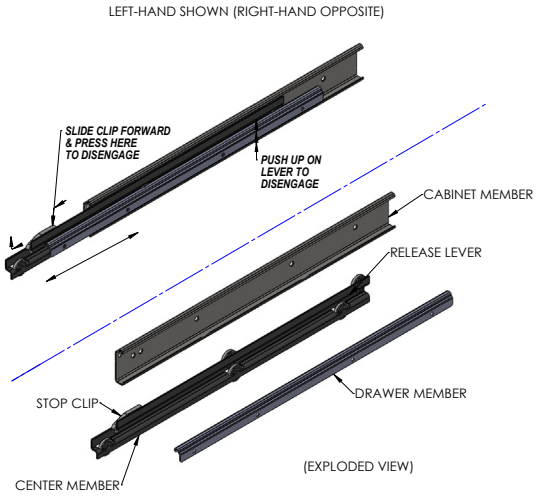

To install a drawer, identify the correct parts and orient the center members so the plastic clips are in the front and at the top. Insert one of the center members into the front of the correct cabinet member (which is permanently attached to the inside of the cabinet) and slide it in, until it stops. Push up on the release lever (located toward the rear and top of the center member) to allow the center member roll the rest of the way into the cabinet member, in the "drawer closed" position. Repeat for the opposite side center member. Pull each center member out a few inches, press down on the rear of each stop clip, and pull forward so the hook on the front of the clip rotates up, into the "unlocked" position. Lift the drawer body into place, resting the drawer members (the channels welded to the sides of the drawers) on the front wheels of the center member, and slide the drawer into the cabinet. Once the drawer goes in all the way and slides smoothly, open it enough to access the stop clips. Lift the back of each clip and push in at the front, so the hook portion snaps into the "locked" position. The drawers are now secured, so they cannot accidentally be lifted out of the cabinet. Check that the drawer is properly aligned, rolls smoothly and the drawer gasket seals firmly.

If the drawer fronts needs adjustment (once all drawers are installed and closed), loosen the screws that hold the drawer front to the drawer body. Move the drawer front into position desired and re-tighten all screws.

REMOVAL AND REPLACEMENT OF DRAWER CAGE

Follow the instructions above to remove the drawers. Take out the four (4) mounting screws around the inside of each opening. Use a razor knife to carefully slit any silicone sealing the cage frame to the cabinet. Lift the drawer cage up, above the breaker covers, and slide it out of the cabinet. The fit is tight, so the straighter it's aligned, the easier it will be to remove.

Replacement is the opposite of the removal. Once the drawer cage is in as far as it will go, the notches at the bottom front should surround the breaker corners, the cage should be sitting flat on the interior floor of the unit and the front face of the cross mullion should be flush with the front face of the unit. This allows the drawer gasket to seal smoothly around the drawer opening.

With the cage in place, sitting flat on the floor of the unit and flush with the front, reinstall the four (4) front mounting screws in each opening, screwing through the primary breakers, and through the metal beneath them.

INITIAL CLEANING PROCEDURE

Prior to start-up and before placing any product inside of your new model, the interior of the cabinet should be thoroughly cleaned. Remove the protective film (which is clear on some models) from all interior sides, bottom and other internal metal panels, by working the corner loose and slowly pulling the film back. Washing with a mild soap and warm water solution is recommended for cleaning the aluminum and stainless steel surfaces of your cabinet. This should be followed by cleaning with a baking soda solution (three (3) tablespoons of baking soda to each quart of warm water). Wipe thoroughly with a damp cloth or sponge that has been soaked in clean water and wrung out thoroughly, and dry with a clean, soft cloth.

IMPORTANT NOTE: Never use harsh detergents, cleaners, scouring powders or chemicals when cleaning your model. Failure to dry the interior surfaces after cleaning may result in a streaking or staining of the metal.

Complete cleaning procedures and precautions are listed in the (**"Periodic Cleaning Procedure" under "Maintenance".**

START-UP PROCEDURE

ELECTRICAL CONNECTIONS

To insure proper operation, your new model must be connected to an individual circuit that can supply the full voltage as stated on the cabinet serial data plate. For correct voltage, power draw, and wire accommodations, check the data on the serial data plate located on the inner right wall of your new model. Verify that this information exactly matches the electrical characteristics at the installation location. An electrical wiring diagram, located on the inside compressor compartment rear, next to the electrical console box, should also be consulted during connection. For reference, a copy of each electrical wiring diagram is located towards the back of this manual (**see "Wiring Diagrams" section**).

Refrigeration compressors are designed to operate within +/-10% of the rated voltage indicated on the cabinet serial plate. Excessively high or low supply power can burnout the compressor. This can be easily detected and will void the factory warranty. Full voltage at the correct rating, on a separate, designated circuit, not affected by the operation of other electrical appliances, must be available to the refrigeration unit at all times. Extension cords should never be used on commercial equipment, as they can overheat and/or result in low voltage.

GFI/GFCI RECEPTACLES

Ground-Fault Circuit Interrupter (GFCI or GFI) devices are <u>not</u> recommended for most commercial refrigerators and freezers, since nuisance trips may occur, typically due to moisture. This can cause temporary loss of power, which may result in high storage temperatures and potentially unsafe food product.

Building codes in some areas may require certain 115 volt receptacles to be protected by a GFI. If you need to connect your equipment to a protected circuit, a properly sized, commercial grade GFI circuit breaker should be used on a separate, isolated power supply. Or a qualified electrician may be able to hard wire your equipment, eliminating the need for a GFI device. Contact Continental's Service Department before making any modifications to your cabinet, to avoid loss of warranty.

<u>NOTE</u>: GFI RECEPTACLES ARE NOT RECOMMENDED, PRODUCT LOSS OR SERVICE PROBLEMS RESULTING FROM NUISANCE TRIPS, CONNECTION TO A DEFECTIVE OR IMPROPER POWER SUPPLY, AND UNAUTHORIZED MODIFICATIONS TO YOUR EQUIPMENT CAN CAUSE A HAZARD AND WILL VOID FACTORY WARRANTY.

115 VOLT, 60 HZ, 1 PHASE CONNECTION

All 115 volt models are provided with a factory installed, UL approved 15-amp power cord and NEMA 5-15P plug, or a 20-amp power cord and NEMA 5-20P plug. To insure proper operation, this equipment must be plugged into a NEMA compatible, grounded receptacle that can supply the full voltage and amperage stated on the serial plate (**see Figure 1**).



NEMA 5-15P

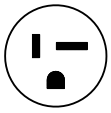

NEMA 5-20P

<u>IMPORTANT NOTE</u>: A SEPARATE, ISOLATED, PROPERLY SIZED POWER SUPPLY MUST BE PROVIDED. GFCI DEVICES AND/OR EXTENSION CORDS SHOULD NOT BE USED. PRODUCT LOSS, AS WELL AS PROBLEMS RESULTING FROM NUISANCE TRIPS OR HIGH/LOW VOLTAGE, ARE <u>NOT</u> COVERED UNDER WARRANTY.

<u>CAUTION</u>: IF UNIT IS UNPLUGGED OR DISCONNECTED FOR ANY REASON, ALLOW 5-6 MINUTES BEFORE TURNING THE UNIT BACK ON TO ALLOW THE SYSTEM TO EQUALIZE. DISREGARDING THIS PROCEDURE COULD CAUSE AN OVERLOAD AND PREVENT THE UNIT FROM OPERATING.

<u>IMPORTANT NOTE</u>: If the supply cord is damaged, it must be replaced by the manufacturer, its service agent, or a similarly qualified persons in order to avoid a hazard

SPECIAL VOLTAGE CONNECTIONS

When models are ordered from the factory with special, optional voltages, connections should be made as required on the electrical wiring diagram provided on the inside compressor compartment rear next to the electrical console box.

START-UP CHECKLIST

After your unit has been installed and electrically connected in accordance with this manual, please take time to check the fol-

lowing before loading product, to assure trouble free operation:

- ❑ Cabinet location suitable and unit is level (see **"Installation and Location"**)
- ❑ Seperate power upply with correct voltage (see **"Electrical Connections"**)
- ❑ Vaporizer connected (see **"Condensate Removal"**)
- ❑ Drawers close and seal properly (see **"Removal of Drawers and Drawer Adjustments"**)
- ❑ Refrigerators: Correct cabinet temperature (see **"Refrigeration System and Adjustment"**)
- ❑ Freezers: Correct cabinet temperature (see **"Freezer System and Adjustment"**)
- ❑ Refrigeration lines free of kinks and vibration (see **"Refrigeration System and Adjustment"**)
- ❑ Condenser and evaporator fans rotate freely (see **"Refrigeration System and Adjustment"**)
- ❑ All packaging discarded and cabinet cleaned (see **"Periodic Cleaning"**)

The system should run smoothly and quietly in accordance with generally accepted commercial standards. If any unusual noises are heard, turn the unit off immediately and check for any obstructions of the condenser or evaporator fans. Fan motors, fan blades, or fan housings can be jarred out of position through rough handling in transit or during installation.

CAUTION: IF UNIT IS UNPLUGGED OR DISCONNECTED FOR ANY REASON, ALLOW 5-6 MINUTES BEFORE TURNING THE UNIT BACK ON TO ALLOW THE SYSTEM TO EQUALIZE. DISREGARDING THIS PROCEDURE COULD CAUSE AN OVERLOAD AND PREVENT THE UNIT FROM OPERATING.

OPERATION WITH MECHANICAL THERMOSTAT

All cabinets must be given sufficient time to reach normal operating temperature before placing any product inside cabinet. Refrigerators are designed to maintain an ideal cabinet temperature of 38° to 40°F (3.3° to 4.4°C), approximately 1 hour of operation is required to reach this temperature. For optimum air flow, do not put any pans in drawers during pull-down period. After cabinet has reached temperature and begins to cycle, product and food pans can be placed in your cabinet. Freezers are designed to maintain an ideal cabinet temperature of -4° to 0°F (-20° to -18°C), approximately 2 hours of operation are required to reach this temperature.

THERMOMETER AND ADJUSTMENT

Griddle Stand models are provided with a round dial thermometer, located on the front grill (**see Figure 4**) so the temperature inside the cabinet can be observed without opening the drawers. The thermometer is maintenance-free and needs no further calibration. The thermometer has a round face with an analog temperature scale in Fahrenheit (°F) and Celsius (°C), as well as a color band with blue (safe) and red (danger) zones. If your dial thermometer needs adjustment, or if your cabinet has a digital thermometer, see **"Optional Accesories"** section of this manual for additional information.

All thermometers are pre-calibrated at the factory, to accurately show the cabinet temperature. While in transit, your cabinet will be subjected to more jarring and vibration than at any other time in its life and the thermometer may require some adjustment at start-up. During periods of heavy use, when the cabinet doors are opened repeatedly or remain open for an extended period of time, the temperature inside your cabinet may temporarily exceed the "safe" temperature indicated on the display. This is normal, as warm air outside the cabinet mixes with the cold air inside the cabinet, or if warm product is loaded into the cabinet. If your thermometer continues to show a temperature above the "safe" zone for your refrigerator or freezer, close the doors and make sure they seal tight. Keep the doors closed for at least 30 minutes and check the display again. If it still indicates high temperature, see **"Dial Thermometer and Calibration"** section of this manual for additional information.

REFRIGERATION SYSTEM AND ADJUSTMENT

All self-contained refrigerators are designed and factory set to maintain an average cabinet temperature of 38° to 40°F (3.3° to 4.4°C). On Griddle Stand models, the temperature control is located behind the front grill, on the side wall of the machine compartment (**see Figure 4**). If an adjustment is necessary to maintain temperature within the range noted above, place a screwdriver into the slotted knob on the temperature control and turn clockwise no more than 1/4 turn for a colder cabinet temperature or counterclockwise for a warmer cabinet temperature. Allow the cabinet to stabilize for at least 30 minutes and recheck the temperature. Further adjustments out of the factory design temperature range should only be made by a qualified refrigeration mechanic.

IMPORTANT NOTE: Turning the temperature control fully counterclockwise turns the compressor "off."

DEFROST OPERATION (Refrigerator Models)
All griddle stand refrigerators utilize a time initiated "off-cycle" defrost, to ensure consistent performance, even under heavy usage. The timer is located in the front of the machine compartment, behind the front grill (**see Figure 4**).

If desired, the start time for a defrost cycle can be adjusted by turning the knob on the defrost timer clockwise until defrost cycle begins (compressor and all fans will terminate). Defrost will begin at this same time every day at 8-hour intervals. For example, if an 8:00 am defrost is desired, at 8:00 am turn the timer knob to initiate defrost. A defrost cycle will start every day at 8:00 am, 4:00 pm, 12:00 am. If there is a loss of power to the cabinet, the defrost timer will have to be reset to maintain the same defrost cycle times.

IMPORTANT NOTE: All refrigerators are designed with an automatic, "off-cycle" defrost system which means that defrosting occurs automatically when the compressor is not operating during an off-cycle. Do not set the thermostat too cold where the cabinet temperature will fall below 35°F (1.7°C) because the evaporator will become blocked by ice since the compressor off-cycle will be considerably shortened. This will result in loss of product stored within the cabinet and require service to defrost the evaporator and re-djust the thermostat.

EVAPORATOR ASSEMBLY
All undercounter refrigerators and freezers have an easily accessible and serviceable, performance-rated, full length, extra large coated fin coil for extended life, with a uniquely directed air flow distribution that keeps product at uniformly constant temperatures (**see Figure 4)**.

FREEZER SYSTEM AND ADJUSTMENT
All self-contained freezers are factory set to maintain an average cabinet temperature of -4° to 0°F (-20° to -18°C). They are designed for the purpose of holding pre-frozen product and although they are capable of freezing small quantities of fresh product, they are not designed to be blast chillers or ice-cream freezers. Do not attempt to freeze bulk quantities of fresh food or ice-cream. The temperature control is is located behind the front grill, on the side wall of the machine compartment (**see Figure 4** for thermostat location). If an adjustment is necessary to maintain the above temperature range only, place a screwdriver into the thermostat slot and turn clockwise for a colder cabinet temperature or counterclockwise for a warmer cabinet temperature. Further adjustments out of the factory design temperature range must be made by a qualified refrigeration mechanic only.

IMPORTANT NOTE: Turning a thermostat fully counter-clockwise turns the refrigeration compressor "off."

DEFROST OPERATION (Freezer Models)
All griddle stand freezers are equipped with an automatic, electric defrost system consisting of electric evaporator coil and drain pan heaters, a defrost time clock and an automatic defrost limit switch. The defrost system is time initiated by the time clock and temperature terminated by the automatic limit switch. The time clock is preset for (3) defrost periods per day at 8-hour intervals with fail safe cut-off time of 20 minutes. These settings are not adjustable. The defrost time clock is located in the front of the machine compartment, behind the front grill. (**see Figure 4**). If desired, to pre-set the initiation of the defrost cycle to the time of day on the defrost time clock, turn the knob on the center dial of timer face clockwise until the unit defrost cycle begins (compressor and all fans will terminate). Defrost will begin at this same time every day at eight (8) hour intervals. For example, if an 8:00 am defrost is desired, at 8:00 am turn the defrost manual set knob to initiate defrost and a defrost cycle will start every day at 8:00 am, 4:00 pm, 12:00 am. It will be necessary to reset the time of defrost on the timer if the freezer is turned off or has loss of power.

ELECTRONIC CONTROL DISPLAY AND BUTTONS

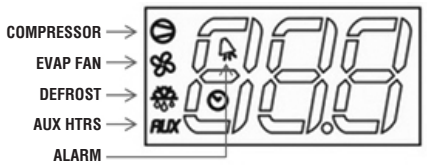

The control icons shown above will be illuminated when the associated function is active. If an icon is flashing, it means the function will be activated after the controller delays are finished.

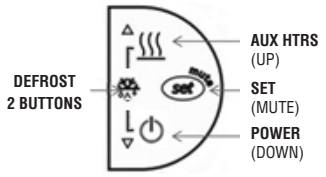

- The "**AUX HTRS/UP**" button is used for activation or deactivation of the auxiliary anti-condensate heaters or for increasing values.
- The "**SET/MUTE**" button is used to lock in a new value or to silence the alarm beeper.
- The "**POWER/DOWN**" button is used to turn the unit on/off

or for decreasing values.
- Press the "**UP**" and **"DOWN**" buttons simultaneously for 3 seconds to put into manual defrost.

NOTE: The electronic control has 2 or 3 probes. There is the regulation probe in the return air stream, there is an evaporator probe located in the evaporator coil, and if the unit has fascia heaters, there will be an ambient probe.

INITIAL SEQUENCE OF OPERATION

1. Cabinet is plugged in.
   a. The display will illuminate with the current cabinet temperature.
   b. The compressor icon, fan icon, and the aux heater icon may flash for a period of time, indicating normal delayed start-up.
   c. After the start-up delay, the compressor and evaporator fan(s) will start if the control is calling for cooling.

2. The control will cycle the compressor on and off determined by the SET-POINT and DIFFERENTIAL.
   a. The SET-POINT is the preprogrammed temperature which shuts off the compressor.
   b. The DIFFERENTIAL is the preprogrammed temperature that is added to the SET POINT temperature that will start the compressor.

EXAMPLE: Set-Point 36°F and the differential is 4°F the compressor will cycle off at 36°F and back on at 40°F.

3. The control may be preprogrammed to initiate a defrost by time interval.
   a. During defrost, the defrost icon will appear in the display and the compressor will turn off until a preprogrammed temperature or time is reached. During this time for freezers only, the evaporator fan(s) will also turn off and the defrost heater will be energized.
   b. After a preprogrammed evaporator temperature has been reached, there may be a short delay for both the compressor and evaporator fan(s) to restart.
   c. After the defrost cycle is completed, the control will resume normal operation.

HOW TO CALIBRATE THE ELECTRONIC CONTROL

The controller temperature display can be calibrated if required. Before attempting to calibrate the temperature display, check the display by placing a pre-calibrated temperature sensing device in the center of the refrigerated compartment and keep the doors closed for at least 15 minutes. The temperature display should read the same temperature as the sensing device, within +/-2°F. If not, follow these instructions to calibrate.

1. Press and **HOLD** the "SET" button until "PS" appears flashing in the display. Release the "SET" button.
2. Press the "UP" button until "/C1" appears in the display. Release the "UP" button.
3. Press and release the "SET" button. The current value of the offset will appear in the display.
4. Press the "UP" button to increase or the "DOWN" button to decrease the offset value.
5. Press and **HOLD** the "SET" button for 5 seconds to confirm and save the new value. When complete, the current temperature will be displayed. RELEASE the "SET" button.

EXAMPLE: If a sensing device in the cabinet reads 38°F and the control display shows 41°F, follow steps above and decrease the current offset by 3°F. If the current offset was 0, change to -3.

HOW TO CHANGE THE SET-POINT

Refrigerators are factory set to maintain an average temperature of 38°F. Freezers are factory set to maintain an average temperature of 0°F. To change set-point:

1. Press and **HOLD** the "SET" button until the current set-point begins flashing. Release the "SET" button.
2. Press the "UP" or "DOWN" button to adjust to the new set-point value.
3. Press and release the "SET" button to lock in the new set-point. The control will now resume normal operation with the new set-point.

HOW TO SWITCH THE CONTROLLER OFF/ON

The controller can be switched OFF. The display will still be active but all systems operated by the control will be OFF.

1. To turn the controller OFF, press and **HOLD** "POWER" button for 5 seconds. When in the OFF mode, "OFF" will alternate in the display with the current appliance temperature.
2. To turn the controller back "ON", press and **HOLD** "POWER" button for 5 seconds. The controller will resume normal operation.

ANTI-CONDENSATE CONTROL (ON)

1. To see the current state of the aux heaters (anti-condensate), press and **HOLD** "AUX HTR" button for 1 second. **RELEASE** "AUX HTR" button. The display will show the current state of the heater when the button is pressed.
2. To change the current state of the AUX Heaters, press and **HOLD** "AUX HTR" button. The display will show the current

state of heater operation. After 5 seconds, the heater will switch to the opposite state and the display will return to displaying the cabinet temperature. **RELEASE** the button.

The control has a built in energy saving feature for the AUX (anti-condensate) heaters. When in the ON position, the AUX icon may not illuminate indicating the AUX heaters are not currently energized. The control will automatically energize the AUX heaters when the conditions require these heaters to be activated.

HOW TO INITIATE A MANUAL DEFROST

This is used when a one-time additional defrost may be necessary to clear accumulated ice from the evaporator coil.

1. Press and **HOLD** "UP" and "DOWN" buttons simultaneously for 5 seconds.
2. After 5 seconds, the defrost icon will illuminate. **RELEASE** "UP" and "DOWN" buttons.

HOW TO CHANGE THE DEFROST INTERVAL

This is used to increase or decrease the frequency of defrosts. If the interval is set at "8", a defrost will occur every 8 hours. If you need more defrosts, lower this value.

1. Press and **HOLD** "SET" button until "PS" appears flashing in the display. Release "SET" button.
2. Press "UP" button until "DI" (defrost interval) appears in the display. Release "UP" button.
3. Press and **RELEASE** "SET" button. The current defrost interval will appear in the display.
4. Press "UP" or "DOWN" button to adjust to the new defrost interval.
5. Press and **HOLD** "SET" button to lock in this new value. When the display returns back to cabinet temperature, release "SET" button

NOTE: Defrost cycles are time initiated and temperature terminated with a maximum time cut-off.

HIGH AND LOW TEMPERATURE ALARMS

The controller has high and low alarm set-points. These values can be modified per the end user requirements. There is a pre-programmed time delay for the alarm to activate to eliminate nuisance alarms. To change the alarm threshold values:

1. Press and **HOLD** "SET" button until "PS" appears flashing in the display. Release "SET" button.
2. Press "UP" button until "AL" (Low Alarm Setting) or "AH" (High Alarm Setting) appears in the display. Release "UP" button.
3. Press and **RELEASE** "SET" button. The current alarm setting will be shown.
4. Press "UP" or "DOWN" button to get the desired alarm set-point.
5. Press and **HOLD** "SET" button for 5 seconds to confirm and save the new value. When complete, the current temperature will be displayed. Release "SET" button.

NOTE: When in an alarm condition, the display will alternate between the cabinet temperature and alarm code. "AL" when in a low temperature alarm condition and "AH" when in a high temperature alarm condition. The control will also beep and the alarm icon will activate when in an alarm condition. To silence the alarm beeper for the active alarm just press and release the "SET/MUTE" button.

ELECTRONIC CONTROL ERROR CODES

If there is a regulation probe error, the display will just show alarm code "E0" and not flash the cabinet temperature. **If there is a probe error, you must contact your service provider immediately**.

Alarm Code	Alarm Description	Notes
E0	Regulation Probe Error	Located in return air stream
E1	Evaporator Probe Error	Located in evaporator coil
E2	Ambient Probe Error	Located on side of electrical box
LO	Low Temperature Alarm	Reference "AL" parameter
HI	High Temperature Alarm	Reference "AH" parameter

- If there is an error code "E0", the control will operate the appliance in a preprogrammed ON/OFF cycle based on time, not temperature.
- If there is an error code "E1", the control will still go into a defrost but will terminate on time, not temperature.
- If there is an error code "E2", the aux heaters will not operate.

MAINTENANCE

SAFETY PRECAUTIONS

DISCONNECT POWER BEFORE ATTEMPTING TO WORK ON OR CLEAN EQUIPMENT. DO NOT ATTEMPT TO REMOVE ANY COVERS OR PARTS YOURSELF, AS THIS CAN EXPOSE DANGEROUS, HIGH VOLTAGE WIRING. SERVICE SHOULD ONLY BE PERFORMED BY A QUALIFIED TECHNICIAN.

ALWAYS ROUTE POWER CORDS AWAY FROM AREAS WHERE THEY CAN BE WALKED ON OR DAMAGED BY OTHER EQUIPMENT. YOUR APPLIANCE IS EQUIPPED WITH A POLARIZED, GROUNDED POWER PLUG. NEVER

ATTEMPT TO REMOVE THE GROUND POST OR USE A NON-POLARIZED ADAPTER, WITHOUT PROPERLY GROUNDING THE EQUIPMENT.

CONDENSER FINS ARE MADE FROM THIN METAL AND HAVE SHARP EDGES. ALWAYS WEAR GLOVES AND USE CAUTION WHEN WORKING ON OR AROUND THE CONDENSING UNIT TO PREVENT CUTS AND AVOID DAMAGING FINS, TUBING AND OTHER COMPONENTS.

KEEP ELECTRICAL COMPONENTS AND CONTROLS DRY. DO NOT SPRAY WITH WATER! FAILURE TO FOLLOW THESE INSTRUCTIONS CAN CAUSE A SAFETY HAZARD AND VOID FACTORY WARRANTY.

PERIODIC CLEANING PROCEDURE

It is always best to clean your refrigerator or freezer when the product load in your cabinet is as its lowest level. To clean the interior or exterior cabinet surfaces, follow these procedures:

1. Disconnect your cabinet from its power supply and remove all product from inside.
2. Open all doors and allow the cabinet to reach room temperature. Remove all accessories (pans, clips, etc.) from inside and wash them with a baking soda and warm water solution, wipe thoroughly with clean water. Dry all acces sories completely with a soft clean cloth.
3. Once the cabinet has reached room temperature, wash the inside and outside surfaces with a solution of warm water and baking soda. Pay particular attention to the face of the cabinet, as any residue or debris can impair the door seal. For slightly more difficult cleanups, ammonia or vinegar in warm water can be used. Wipe down thoroughly with a damp cloth or sponge that has been soaked in clean water and wrung out thoroughly, and dry with a clean, soft cloth. Carefully wash all of the vinyl door gaskets with clean water, dry them and check for any damage, which may affect the seal. Failure to dry all surfaces completely may cause water stains or streaking on the aluminum or stainless steel finish.
4. Return all accessories to their original locations, reconnect the power. Wait at least 1 hour before reloading product.

CLEANING PRECAUTIONS

NEVER USE HARSH DETERGENTS, ABRASIVE CLEANERS, OR CHEMICALS CONTAINING HALOGENS (CHLORINE, FLUORINE, IODINE, ETC.) WHEN CLEANING YOUR UNIT. CONCENTRATED CHEMICALS CAN CAUSE DISCOLORING, ALWAYS WIPE THEM OFF IMMEDIATELY IF CONTACT OCCURS. SEE "CLEANING OF STAINLESS STEEL" FOR MORE INFORMATION. AVOID SPLASHING THE CABINET WITH WATER AND CHEMICALS WHEN MOPPING FLOORS OR CLEANING OTHER EQUIPMENT AROUND IT.

GENERAL PREVENTATIVE MAINTENANCE

The most important thing you can do to maintain any refrigerator or freezer and extend its life, is to keep the condenser clean. Performance of the air-cooled condensing unit, located on the side of the cabinet, depends exclusively upon the amount of air passing through the condenser fins. Your refrigerator or freezer will run more efficiently, consume less energy, and provide a maximum of trouble-free service throughout its lifetime if the condenser coil is kept clean and an adequate supply of clean, cool air is provided at all times. Periodically (at least once a month) it is important to inspect the condenser coil for any debris or blockage that may have accumulated.

If the condenser coil is dirty or dusty, disconnect the cabinet power supply and use a stiff brush to wipe away any dirt and debris from the condenser fins. Using a vacuum cleaner with a brush attachment may aid in this process. After cleaning, restore electrical service to your cabinet.

IMPORTANT!

AFTER-MARKET CONDENSER FILTERS ARE NOT PERMITTED BECAUSE THEY HINDER AIRFLOW. FAILURE TO KEEP THE CONDENSER CLEAN AND FREE FROM OBSTRUCTIONS WILL CAUSE EXCESSIVE COMPRESSOR LOAD, REDUCING THE PERFORMANCE OF YOUR UNIT. THIS CAN RESULT IN PREMATURE FAILURE AND WILL VOID YOUR WARRANTY.

CARE AND CLEANING OF STAINLESS STEEL*

*Some information and graphics for this section were obtained from "Stainless Steel Equipment Care and Cleaning" brochure, published by the North American Association of Food Equipment Manufacturers (NAFEM).

Contrary to popular beliefs, stainless steel can rust, if not properly cared for and maintained (That's why it's called stain-LESS steel, not stain-PROOF steel.)

All steel is primarily made of iron. Stainless steels contain other metals, such as chromium and nickel, that provide an invisible film on the surface of the steel that acts as a shield against corrosion. As long as this invisible layer is intact and not broken or contaminated, the metal will retain its corrosion protection and remain stain-less.

There are 3 basic things that can break down the protective layer on your stainless steel, which must be avoided:

1. **MECHANICAL ABRASION** is caused by things that scratch the surface of the metal. Only use soft cloths or plastic scouring pads to clean and always scrub in the same directions as the metal grain.



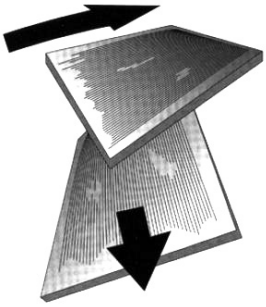

DO NOT USE: abrasive cleaners, steel pads, wire brushes, scrapers or knives to clean your equipment.

2. **CHLORIDES** are found in water, salt, food and worst of all, many cleaners. Only use chloride-free, alkaline-based, non-abrasive cleaners. Always wipe thoroughly with cool, clean water and dry with a soft towel. A solution of 1 tablespoon baking soda mixed with 1 pint water can be used to remove tough stains. Do not use brasive cleaners, chemicals with chlorides or muriatic acid to clean your equipment.

3. **HARD WATER** causes spots and stains on stainless steel surfaces, particularly when it is heated. Find out the hardness of your water and treat it properly, if needed. Use a water filter and softeners if you have hard water. Club soda can be used to remove streaks or spots.

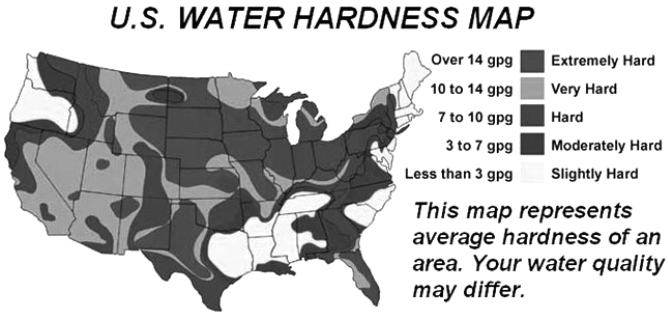

DO NOT USE: hot or hard water to clean stainless steel.

CLEAN YOUR STAINLESS STEEL REGULARLY using the proper tools and cleaners. After cleaning, always **wipe, wipe, wipe** thoroughly with **cool, clean, clear water**.

CHECK ALL OF YOUR EQUIPMENT PERIODICALLY. If you see any signs of rust, clean the area immediately, with a plastic scrubbing pad. If surface rust is removed promptly, permanent corrosion, pits and cracks may be avoided. Special stainless steel polishes, that can help restore the protective coating on your equipment, are available from a variety of retailers.

IMPORTANT: If these recommendations are not followed, the protective film on your stainless steel can break down and your equipment may begin the long walk down the dark road of corrosion.

PARTS AND SERVICE

Continental is committed to providing the best customer service in the industry. All new units come with a Limited Extended Protection Warranty (**see "Warranty" section** of this manual for details). If a problem arises with your equipment, please contact our Service Department at **1-800-523-7138**. One of our Service Specialists will do everything possible to solve the problem as quickly as possible.

IMPORTANT: Servicing shall be performed only as recommended by Continental Refrigerator

ITEMS NOT COVERED UNDER WARRANTY INCLUDE, BUT ARE NOT LIMITED TO:

- **Preventative maintenance:** cleaning condenser coils and other components.
- **Consumables:** light bulbs, door gaskets, batteries. **General hardware adjustments:** cabinet leveling, casters/legs, doors/hinges.
- **Problems due to:** inadequate installation or supply power; improper maintenance, operation, or abuse.
- **Compressor failure due to:** dirty condenser, insufficient clearance/ventilation, excessive temperatures.
- **System adjustments and calibrations, including:** controls, thermometer and expansion valves.

Consult the Table of Contents in the front of this manual for detailed information on the items listed above. Contact Continental's Service Department with any additional questions.

PLACING A SERVICE CALL

In order to receive prompt service, always be prepared to provide your: cabinet model and serial number; cabinet location name and date installed; contact name and phone number; plus a description of the problem.

During normal business hours (Monday to Friday, 8am to 5pm Eastern) contact the Service Department at: **800-523-7138**, **prior to any warranty service work being performed**.

After normal business hours, or on weekends you can notify our Service Department by sending an email to: **continentalservice@nrac.com** or by calling **267-525-3300** and leaving a message in the general mail box. Be sure to provide the information listed above. Contact Continental Refrigerator the following business day, during normal business hours, to verify the status of your call.

OBTAINING REPLACEMENT PARTS UNDER WARRANTY

If replacement parts are required for a unit under warranty, contact Continental's Service Department. New parts will be sent from the factory and, when applicable, a Return Goods Authorization (RGA) will be issued to return old parts. The RGA number must appear on the packaging of any parts returned, or they will not be accepted. If a service agent uses a part from their stock, Continental will replace it with a factory part.

OBTAINING REPLACEMENT COMPRESSOR UNDER WARRANTY

If the compressor should fail within the first twelve (12) months of use, or within twenty (20) months from the date code on the compressor, an "over-the-counter" exchange must be made at an authorized Copeland, Danfoss, Embraco, or Tecumseh wholesaler.

After the first year, the compressor motor is covered under an extended "parts only" warranty. The customer is responsible for any labor charges and any additional parts that may be required. Contact the Service Department to obtain a replacement compressor through one of the following methods:

- Continental will supply a replacement compressor at no charge and pay for regular freight. (If expedited freight is requested, the end user, dealer or service agent is responsible for additional charges and must provide credit card information.
- A compressor can be purchased locally and Continental will either replace the stock unit with a new factory compressor, or offer an allowance towards the purchase of a replacement compressor, up to: $100 for 1/5hp to 1/3hp; $250 for 1/2hp to 3/4hp; $350 for 1hp to 2hp.

The data tag from the defective compressor (or compressor model, serial number and date code, if the tag cannot be removed) must be included with any reimbursement request.

INFORMATION FOR SERVICING TECHNICIAN

1. Checks to the area

Prior to beginning work on systems containing flammable refrigerants, safety checks are necessary to ensure that the risk of ignition is minimized. For repair to the refrigerating system, the following shall be completed prior to conducting work on the system.

a. Work procedure

Work shall be undertaken under a controlled procedure so as to minimize the risk of a flammable gas or vapor being present while the work is being performed.

b. General work area

All maintenance staff and others working in the local area shall be instructed on the nature of work being carried out. Work in confined spaces shall be avoided.

c. Checking for presence of refrigerant

The area shall be checked with an appropriate refrigerant detector prior to and during work, to ensure the technician is aware of potentially toxic or flammable atmospheres. Ensure that the leak detection equipment being used is suit-

able for use with all applicable refrigerants, i.e., nonsparking, adequately sealed, or intrinsically safe.

d. Presence of fire extinguisher

If any hot work is to be conducted on the refrigerating equipment or any associated parts, appropriate fire extinguishing equipment shall be available on hand. A dry chemical or CO2 fire extinguisher should be adjacent to the charging area.

e. No ignition sources

No person carrying out work in relation to a refrigerating system which involves exposing any pipe work shall use any sources of ignition in such a manner that it may lead to the risk of fire or explosion. All possible ignition sources, including cigarette smoking, should be kept sufficiently far away from the site of installation, repairing, removing and disposal, during which refrigerant can possibly be released to the surrounding space. Prior to work taking place, the area around the equipment shall be surveyed to make sure that there are no flammable hazards or ignition risks. “No Smoking” signs shall be displayed.

2. Ventilated area

Ensure that the area is in the open or that it is adequately ven\ tilated before breaking into the system or conducting any hot work. A degree of ventilation shall continue during the period that the work is carried out. The ventilation should safely disperse any released refrigerant and preferably expel it externally into the atmosphere.

3. Checks to the refrigerating equipment

Where electrical components are being changed, they shall be fit for the purpose and to the correct specification. At all times, the manufacturer’s maintenance and service guidelines shall be followed. If in doubt, consult the manufacturer’s technical department for assistance. The following checks shall be applied to installations using flammable refrigerants:

a. the actual refrigerant charge is in accordance with the room size within which the refrigerant containing parts are installed;

b. the ventilation machinery and outlets are operating adequately and are not obstructed;

c. if an indirect refrigerating circuit is being used, the secondary circuit shall be checked for the presence of refrigerant;

d. marking to the equipment continues to be visible and legible. Markings and signs that are illegible shall be corrected;

e. refrigerating pipe or components are installed in a position where they are unlikely to be exposed to any substance which may corrode refrigerant containing components, unless the components are constructed of materials which are inherently resistant to being corroded or are suitably protected against being so corroded.

4. Checks to electrical devices

Repair and maintenance to electrical components shall include initial safety checks and component inspection procedures. If a fault exists that could compromise safety, then no electrical supply shall be connected to the circuit until it is satisfactorily dealt with. If the fault cannot be corrected immediately but it is necessary to continue operation, an adequate temporary solution shall be used. This shall be reported to the owner of the equipment, so all parties are advised. Initial safety checks shall include:

a. that capacitors are discharged: this shall be done in a safe manner to avoid possibility of sparking;

b. that no live electrical components and wiring are exposed while charging, recovering or purging the system;

c. that there is continuity of earth bonding.

REPAIRS TO SEALED COMPONENTS

1. During repairs to sealed components, all electrical supplies shall be disconnected from the equipment being worked upon prior to any removal of sealed covers, etc. If it is absolutely necessary to have an electrical supply to equipment during servicing, then a permanently operating form of leak

detection shall be located at the most critical point to warn of a potentially hazardous situation.

2. Particular attention shall be paid to the following to ensure that by working on electrical components, the casing is not altered in such a way that the level of protection is affected. This shall include damage to cables, excessive number of connections, terminals not made to original specification, damage to seals, incorrect fitting of glands, etc. Ensure that the apparatus is mounted securely. Ensure that seals or sealing materials have not degraded to the point that they no longer serve the purpose of preventing the ingress of flammable atmospheres. Replacement parts shall be in accordance with the manufacturer’s specifications.

REPAIR TO INTRINSICALLY SAFE COMPONENTS

Do not apply any permanent inductive or capacitance loads to the circuit without ensuring that this will not exceed the permissible voltage and current permitted for the equipment in use. Intrinsically safe components are the only types that can be worked on while live in the presence of a flammable atmosphere. The test apparatus shall be at the correct rating. Replace components only with parts specified by the manufacturer. Other parts can result in the ignition of refrigerant in the atmosphere from a leak. NOTE The use of silicon sealant can inhibit the effectiveness of some types of leak detection equipment. Intrinsically safe components do not have to be isolated prior to working on them.

END-OF-LIFE DISPOSAL OF REFRIGERATED EQUIPMENT

Your unit is designed and built to provide many years of reliable service. At the end of its useful life, please follow the steps below for safe disposal, to help avoid accidents and to protect the environment.

1. Remove all doors, to eliminate any potential for accidental child entrapment.
2. All refrigerant should be removed from the system by a qualified technician and disposed of properly, or reclaimed. (Intentional venting of many refrigerants into the air is harmful and prohibited; violators are subject to fines). All refrigerant oil should be drained from the compressor and discarded appropriately.
3. Properly dispose of the cabinet and refrigeration system components. The majority of the metal in your unit (stainless steel or aluminum cabinet shell and doors, steel shelving and compressor, copper refrigerant lines, etc.) can be recycled. Many recycling facilities will dispose of the unit free of charge, or pay you for scrap value of the material content.

GUIDELINES FOR TECHNICIAN

Decommissioning

Before carrying out this procedure, it is essential that the technician is completely familiar with the equipment and all its detail. It is recommended good practice that all refrigerants are recovered safely. Prior to the task being carried out, an oil and refrigerant sample shall be taken in case analysis is required prior to re-use of recovered refrigerant. It is essential that electrical power is available before the task is commenced.

1. Become familiar with the equipment and its operation.
2. Isolate the system electrically.
3. Before attempting the procedure, ensure that:

a. mechanical handling equipment is available, if required, for handling refrigerant cylinders;

b. all personal protective equipment is available and being used correctly;

c. the recovery process is supervised at all times by a competent person;

d. recovery equipment and cylinders conform to the appropriate standards.

4. Pump down refrigerant system, if possible.
5. If a vacuum is not possible, make a manifold so that refrigerant can be removed from various parts of the system.
6. Make sure that cylinder is situated on the scales before recovery takes place.
7. Start the recovery machine and operate in accordance with instructions.
8. Do not overfill cylinders (no more than 80 % volume liquid charge).
9. Do not exceed the maximum working pressure of the cylinder, even temporarily.
10. When the cylinders have been filled correctly and the process completed, make sure that the cylinders and the equipment are removed from site promptly and all isolation valves on the equipment are closed off.
11. Recovered refrigerant shall not be charged into another refrigerating system unless it has been cleaned and checked.

LABELLING

Equipment shall be labelled stating that it has been de-commissioned and emptied of refrigerant. The label shall be dated and signed. For appliances containing flammable refrigerants, ensure that there are labels on the equipment stating the equipment contains FLAMMABLE REFRIGERANT.

RECOVERY

When removing refrigerant from a system, either for servicing or decommissioning, it is recommended good practice that all refrigerants are removed safely. When transferring refrigerant into cylinders, ensure that only appropriate refrigerant recovery cylinders are employed. Ensure that the correct number of cylinders for holding the total system charge is available. All cylinders to be used are designated for the recovered refrigerant and labelled for that refrigerant (i.e., special cylinders for the recovery of refrigerant). Cylinders shall be complete with pressure-relief valve and associated shut-off valves in good working order. Empty recovery cylinders are evacuated and, if possible, cooled before recovery occurs. The recovery equipment shall be in good working order with a set of instructions concerning the equipment that is at hand and shall be suitable for the recovery of all appropriate refrigerants including, when applicable, flammable refrigerants. In addition, a set of calibrated weighing scales shall be available and in good working order. Hoses shall be complete with leak-free disconnect couplings and in good condition. Before using the recovery machine, check that it is in satisfactory working order, has been properly maintained and that any associated electrical components are sealed to prevent ignition in the event of a refrigerant release. Consult manufacturer if in doubt. The recovered refrigerant shall be returned to the refrigerant supplier in the correct recovery cylinder, and the relevant waste transfer note arranged. Do not mix refrigerants in recovery units and especially not in cylinders. If compressors or compressor oils are to be removed, ensure that they have been evacuated to an acceptable level to make certain that flammable refrigerant does not remain within the lubricant. The evacuation

process shall be carried out prior to returning the compressor to the suppliers. Only electric heating to the compressor body shall be employed to accelerate this process. When oil is drained from a system, it shall be carried out safely.

OPTIONAL ACCESSORIES

INSTALLING ELECTRIC CONDENSATE HEATER

The condensate heater has a thermal limit switch and power cord attached. Place the condensate heater in the drain pan as shown in **Figure 6**. Position the end of the plastic drain tube in the pan. Make sure tubing isn't kinked, end is secure and doesn't touch the heater. Plug the heater power cord into the receptacle labeled "vaporizer". Secure excess cord with wire tie, so it doesn't fall in pan or under the cabinet.

IMPORTANT NOTE: Make sure the condensate heater is plugged into the receptacle labeled "Vaporizer" and that the condensing unit is plugged into the receptacle labeled "condensing unit."

FIGURE 6: Electric Condensate Vaporizer

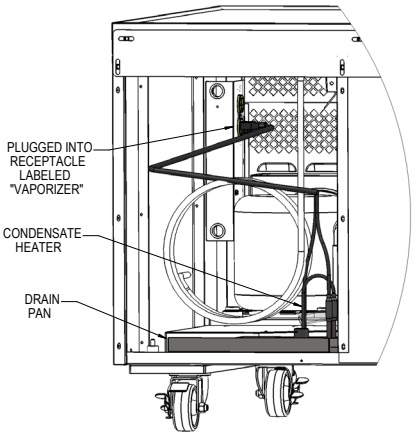

DIAL THERMOMETER AND CALIBRATION

Your NSF-approved dial thermometer has a remote sensing bulb, located in the refrigerated compartment. The display features a large 2" diameter face, with any easy to read scale that shows the internal cabinet temperature in Fahrenheit (°F) and Celsius (°C). Blue (safe) and red (caution) color bands provide a quick, visual indication of the temperature inside your refrigerator or freezer. The thermometer is pre-calibrated at the factory, to accurately show the cabinet temperature.

To check the calibration of your thermometer, place a pre-calibrated temperature sensing device in the center of the refrigerated compartment and keep the door closed for at least 10 minutes. The thermometer should read the same temperature as the sensing device, within +/-2°F (+/-1°C). If it does not, use a small straight-blade screwdriver to carefully pry the clear lens cover from the thermometer body as shown (**see Photo A**).

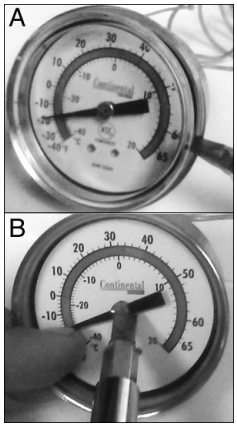

Place the screwdriver tip in the slotted center screw on the thermometer face. Carefully hold the needle pointer and turn the center screw clockwise to lower or counterclockwise to increase the desired temperature, as shown (**see Photo B**). Replace the lens cover and recheck the calibration.

DIGITAL THERMOMETER AND CALIBRATION

Your NSF-approved digital thermometer has a remote sensing bulb, with an FDA-approved coating, located in the refrigerated compartment on the left-hand wall. The unit features a large, easy to read, LED display that shows the internal cabinet temperature. To check the calibration of your thermometer, place a pre-calibrated temperature sensing device in the center of the refrigerated compartment and keep the door closed for at least 15 minutes. The digital thermometer display should read the same temperature as the sensing device within +/-2°F (+/- 1°C).

If it does not, press the right, center section of the front display (**see Photo, next page**) twice. After the first press, the letters "CAL" will appear on the screen (to show the unit is in calibration mode). After the second press, the number of degrees (-25 to 25) that the display offset is set for will appear. Once you see this, press on the lower left corner of the front face to decrease the temperature displayed, or press on the upper left section to increase the temperature displayed.

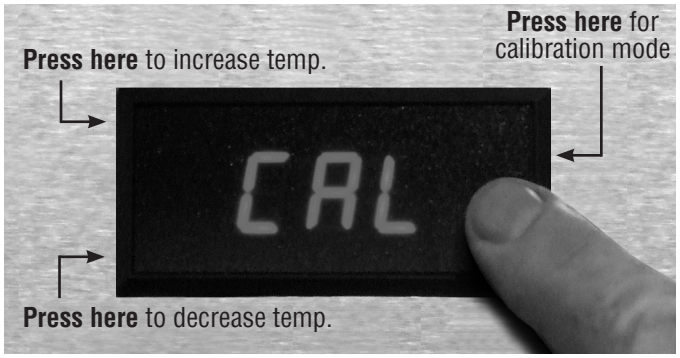

For example, if the sensing device in the cabinet reads 38° and the thermometer display reads 40°, press on the lower left corner twice so that "-2" appears on the display. After adjusting the offset, press on the right center of the display again to exit calibration mode. Wait 10 to 15 seconds for the cabinet temperature to be displayed and recheck the calibration.

NOTE: The buttons need to be pressed without delay between actions. Contact the factory with any questions.

DOOR ADJUSTMENT

All doors are aligned at the factory, however vibration during transit may cause them to shift and adjustment may be necessary. If a door requires realignment, carefully open the door (90°) and loosen, but do not remove the mounting screws securing both the top (**see Figure 6**) and bottom (**see Figure 8**) hinge brackets to the cabinet. Move the door to the desired position by hand or by gently tapping on the edge with a rubber mallet. Hold the door firmly in place and tighten all mounting screws securely, above and below the door. Check alignment and repeat adjustment if necessary.

FIGURE 6: Hinge Adjustment

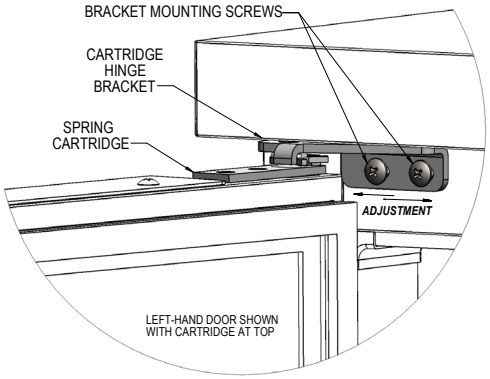

HINGE TENSION ADJUSTMENT

The self-closing doors on your unit have a spring-loaded hinge cartridge concealed in the door (**see Figure 7**) with a hold-open feature and a cushioned stop. When the door is fully opened (115°) the hinge should be tensionfree. When the door is moved between the open and closed position, the spring-loaded hinge will automatically rotate the door toward the closed position. For proper operation, self-closing doors must be installed with the spring-loaded hinge mechanism set to apply tension in the proper direction (**see Figure 8**).

To adjust spring tension, Open the door fully (115°) so it stays in position when released. Remove the mounting screws securing the cartridge bracket to the cabinet (**see Figure 6**). The bracket should stay in position when released, but if it is moved or bumped, it may snap into the closed position.

THE HINGE CARTRIDGE IS SPRING LOADED AND MAY SNAP BACK ON FINGERS WHEN BRACKET IS LOOSE. WEAR WORK GLOVES AND USE CAUTION WHEN REMOVING MOUNTING SCREWS!!

Use a hinge cartridge bracket as a wrench by positioning it upside down with the square hole over the square hub on the spring mechanism (**see Figure 7**). Carefully turn the square hub on the cartridge in the direction shown to tighten the spring. The mechanism should snap to a neutral position. Remount the hinge as shown and repeat the procedure described above until the hinge snaps back when it is moved from the open-door position towards the closed-door position.

FIGURE 7: Spring-Loaded Hinge Mounting

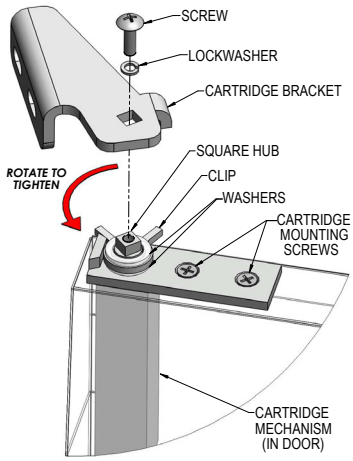

REMOVAL AND REPLACEMENT OF DOORS

If you need to remove a door from your cabinet, first identify the location of the spring-loaded hinge cartridge (**see Figure 8**). Depending on the age of your cabinet, the cartridge is located either on the top or the bottom of the door.

CAUTION: THE HINGE CARTRIDGE IS SPRING LOADED AND THE BRACKET MAY SNAP TOWARDS THE DOOR!

For doors with spring cartridge on the top: Open the door fully (115°) and remove the mounting screws (**see Figure 6**) securing the hinge cartridge bracket to the cabinet above the door. (The bracket should stay in the open position, but if it is moved it may snap closed). Pick the door straight up, being careful not

to bump the cartridge bracket, and lift it off the pivot pin bracket below the door. To reinstall a door, reverse this procedure and follow the instructions above to set the hinge tension and adjust the door properly.

For doors with spring cartridge on the bottom: Open the door fully (115°) and remove the mounting screws securing the hinge cartridge bracket to the cabinet below the door. Lower the door down carefully, to avoid bumping the cartridge bracket, and slide it off the pivot pin bracket over the door. To reinstall, reverse this procedure and follow the instructions above to set the hinge tension and adjust the door properly.

FIGURE 8: Door Hinge Components

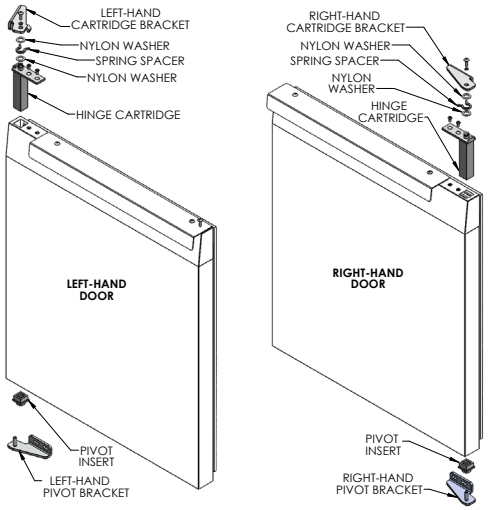

RE-HINGING DOORS

IMPORTANT NOTE: DOORS ARE FIELD REVERSIBLE, BUT DIFFERENT HINGE BRACKETS ARE REQUIRED. HAVE YOUR MODEL & SERIAL NUMBER READY AND CONTACT THE FACTORY FOR THE PARTS NEEDED FOR YOUR UNIT.

Remove the door and hinge cartridge bracket from the cabinet, as described above (see Figure 7). Remove the pivot bracket, located at the opposite edge of the door (**see Figure 8**) by loosening the (2) mounting screws. Remove the hinge cartridge from the door by removing the (2) screws and sliding the cartridge out. Remove the plastic pivot insert from the opposite end of the door by carefully prying it out with a flat-blade screwdriver or putty knife. Remove the remaining "filler screws" from the face of the cabinet and reinstall them in the threaded holes where the brackets were originally mounted.

To re-assemble the reverse-hinged door, obtain the correct cartridge bracket and pivot bracket for the top and bottom of the "opposite-hand" door (**see Figure 8 for parts identification**). Follow the steps above, in reverse order.

INSTALLING LEGS AND LEVELING

If your new unit is supplied with adjustable legs and leg support plates, they will be packed in the accessory carton. Your cabinet will have either four (4) or (6) threaded mounting holes on the bottom of the cabinet (**see Figure 9**). In order to install the legs, carefully tip the cabinet back, adding four (4) 2" wood blocks underneath. Then simply screw the threaded leg studs into the case bottom front leg holes. Repeat this procedure by tilting the cabinet in the opposite direction and install the remaining legs. Make sure the legs are tightened extremely well or the entire model will sway or rock with each opening or closing of the doors, possibly causing damage to the case bottom. This procedure should be performed close to the final installation site and allow access to the rear of the cabinet for condensate evaporator installation (**see "Installing Condensate Evaporator" under "Installation and Location" section**).

To assure your cabinet is level, all legs are equipped with bullet-type leveling bolts. These bolts can be turned by hand or by wrench, clockwise or counterclockwise to level the cabinet.

FIGURE 9: Leg Installation

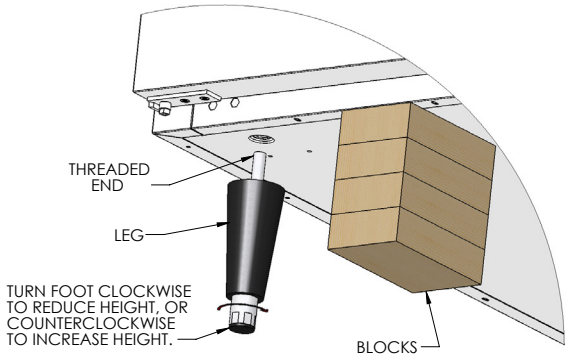

REMOTE SET-UP AND INSTALLATION GUIDELINES

All remote refrigerators and freezers are shipped with an expansion valve, thermostat, solenoid valve and defrost timer installed from the factory. The installer is responsible for installing electric condensate vaporizer, connecting all refrigerant lines, liquid line drier, sight glass, solenoid, head pressure control, hi/

low pressure safety, crankcase heater, condensing unit and any other accessories as well as wiring. The evaporator section has been factory leak checked with helium, however; due to vibration in transit, the entire system must be thoroughly leak checked after installation and prior to start-up. The final leak inspection of the entire completed refrigeration system and all of its components as well as start-up and the operation of the refrigeration system is the sole responsibility of the installer.

The CFC-Free refrigerant used in standard remote and self-contained models is R-134a for refrigerators and R-404a for freezers and CPT models. All compressors and systems designed for these refrigerant utilize polyolester oil as their main lubricant, which absorbs moisture from the ambient surroundings extremely fast and in much greater quantity than conventional mineral oils. Since moisture levels greater than 100 PPM will result in system corrosion and ultimate failure, it is imperative that the compressor, components and entire system be kept sealed.

1. Piping material, pipe routing, and installation shall include protection from physical damage in operation and service, and be in compliance with national and local codes and standards, such as ANSI/ASHRAE 15, IAPMO Uniform Mechanical Code, ICC International Mechanical Code, or CSA B52. All field joints shall be accessible for inspection prior to being covered or enclosed
2. The installation of pipe-work shall be kept to a minimum.
3. Mechanical connections shall be accessible for maintenance purposes.
4. Provision shall be made for expansion and contraction of long runs of piping.
5. Protection devices, piping, and fittings shall be protected as far as possible against adverse environmental effects, for example, the danger of water collecting and freezing in relief pipes or the accumulation of dirt and debris.
6. Piping in refrigeration systems shall be so designed and installed to minimize the likelihood of hydraulic shock damaging the system.
7. Steel pipes and components shall be protected against corrosion with a rustproof coating before applying any insulation.
8. Flexible pipe elements shall be protected against mechanical damage, excessive stress by torsion, or other forces, and that they should be checked for mechanical damage annually.
9. Precautions shall be taken to avoid excessive vibration or pulsation
10. All refrigerant lines and components must be clean, free of burrs and purged with nitrogen prior to and during brazing or soldering connections. Nitrogen purging during brazing or soldering will eliminate carbon or foreign matter contamination. Any system restrictions or contamination is the responsibility of the installer.
11. Condensing unit or compressor shall not be left open to the atmosphere for more than five (5) minutes.
12. No refrigeration component, tubing or fitting shall be left open to the atmosphere for more than ½ hour without being soldered, capped or plugged.
13. Each completed refrigeration system shall be purged with 150psi of dry nitrogen for at least six (6) seconds, then pressurized with at least 165psi of nitrogen for pressure check (making sure to energize any solenoid valves to assure access). Leak-check all joints, flare fittings and valves and make sure there is no pressure drop within the system.
14. System evacuation is of the utmost importance with NON-CFC refrigerant systems. System must be evacuated to a minimum of 200 microns. In addition, a vacuum decay test is strongly recommended to assure there is not a large pressure differential between the system and the vacuum pump. System must be evacuated from both high and low sides of the system using heavy duty vacuum hoses.
15. Each system should be charged with the refrigerant type as specified on the cabinet data tag. This refrigerant type should match the type listed on the condensing unit being used. The refrigerant charge should be held to the minimum required for the satisfactory pull down and operation. For an accurate indication of refrigerant charge, the sight glass will show a full column of liquid.
16. The superheat reading taken 6" from the compressor suction valve should be 30° +/- 5°. Expansion valve adjustment may be necessary to achieve this superheat.
17. Installation of the electric condensate vaporizer is also the responsibility of the installer (**see "Installing Electric Condensate Vaporizer" under "optional Accessories"**).

<u>CAUTION</u>: EXTREME CARE MUST BE USED WHEN ACCESSING THE SYSTEM DURING INSTALLATION. DUE TO THE COMPLEXITY OF REMOTE REFRIGERATION SYSTEMS AND THE POTENTIAL FOR IMPROPER INSTALLATION, ANY RESTRICTIONS, LEAKS, FAILED OR DAMAGED COMPONENTS CAUSED BY CONTAMINANTS ARE NOT THE RESPONSIBILITY OF CONTINENTAL REFRIGERATOR.

NOTICE: GUIDE TO SERVICE TECHNICIANS, REFER TO PARTS AND SERVICE ON PLACING A SERVICE CALL

PROBLEM	PROBABLE CAUSE	CORRECTION
Condensing unit will not start - no hum.	1. Line disconnected, switch open. 2. Fuse removed or blown. 3. Overload protector blown. 4. Control "Off" due to cold location. 5. Control stuck in open position. 6. Wiring improper or loose.	1. Close start or disconnect switch. 2. Replace Fuse. 3. Determine reason and correct/replace. 4. Relocate control. 5. Repair or replace control. 6. Check wiring against diagram.
Condensing unit will not start - hums but trips on overload protector.	1. Improperly wired. 2. Low voltage to unit. 3. Starting capacitor defective. 4. Relay failing to close. 5. Compressor motor has a shorted or open winding. 6. Internal mechanical trouble in compressor. 7. Insufficient air supply.	1. Check wiring against diagram. 2. Determine reason and correct. 3. Determine reason and replace. 4. Determine reason and replace. 5. Replace compressor. 6. Replace compressor. 7. Clear condenser and allow compressor to cool down.
Condensing unit starts and runs, but short cycles on overload protector.	1. Additional current passing through overload protector. 2. Low voltage unit. 3. Overload protector defective. 4. Run capacitor defective. 5. Excessive discharge pressure. 6. Excessive suction pressure. 7. Insufficient air supply.	1. Check wire diagram. Check for added components connected to wrong side of overload protector. 2. Determine reason and correct. 3. Check current, replace protector. 4. Determine reason and replace. 5. Check ventilation, restrictions in cooling medium or refrig. system. 6. Check for misapplication. 7. Clear condenser and allow compressor to cool down.
Condensing unit starts, but fails to switch off of "start" winding.	1. Improperly wired. 2. Low voltage to unit. 3. Relay failing to open. 4. Run capacitor defective. 5. Excessively high discharge pressure. 6. Compressor motor has a shorted or open winding. 7. Internal mechanical trouble in compressor.	1. Check wiring against diagram. 2. Determine reason and correct. 3. Determine reason and replace. 4. Determine reason and replace. 5. Check discharge shut-off valve, possible overcharge. 6. Replace compressor. 7. Replace compressor.
Condensing unit runs, but short cycles on:	1. Overload protector. 2. Thermostat. 3. High pressure cut-out due to: (a) Insufficient air supply. (b) Overcharge. (c) Air in system. 4. Low pressure cut-out due to: (a) Valve leak. (b) Undercharge. (c) Restriction in expansion device.	1. See **Problem 3** 2. Differential must be widened. 3. (a) Check air supply to condenser. (b) Evacuate and re-charge. (c) Evacuate and re-charge. 4. (a) Replace, evecuate and re-charge. (b) Evacuate and re-charge. (c) Replace expansion device.
Condensing unit runs, but for prolonged periods or continuous.	1. Shortage of refrigerant. 2. Control contacts stuck closed. 3. Excessive heat load placed into cabinet. 4. Prolonged or too frequent door openings. 5. Evaporator coil iced. 6. Restriction in refrigeration system. 7. Dirty condenser. 8. Filter drier clogged.	1. Fix leak, evacuate and re-charge. 2. Clean contacts or replace control. 3. Allow unit sufficient time for removal of latent heat. 4. Plan or organize schedule to correct condition. 5. Defrost evaporator coil. 6. Determine location and remove. 7. Clean condenser coil. 8. Replace, evacuate and re-charge.

PROBLEM	PROBABLE CAUSE	CORRECTION
Start capacitor open, shorted or blown.	1. Relay contact not opening properly. 2. Prolonged operation on start cycle: (a) Low voltage to unit. (b) Improper relay. (c) Starting load too high. 3. Excessive short cycling. 4. Improper capacitor.	1. Clean contacts or replace relay. 2. (a) Determine reason and correct. (b) Replace with correct relay. (c) Correct by using pump down. 3. Determine reason for short cycle, see **Problem 5** and correct. 4. Determine correct size and replace.
Run capacitor open, shorted or blown.	1. Improper capacitor. 2. Excessively high line voltage, over 110% of rated maximum.	1. Check size and replace. 2. Determine reason and correct.
Relay defective or blown out.	1. Incorrect Relay. 2. Incorrect mounting angle. 3. Voltage too low or too high. 4. Excessive short cycling. 5. Loose or vibrating mounting position. 6. Incorrect run capacitor. 7. Loose wiring on relay or overload.	1. Check relay and replace. 2. Remount relay in correct position. 3. Determine reason and correct. 4. Determine reason and correct (see **Problem 5**). 5. Remount rigidly. 6. Replace with proper capacitor. 7. Tighten all wiring screws.
Product zone temperature too high.	1. Control setting too high. 2. Inadequate air circulation. 3. Dirty condenser.	1. Adjust T-stat. 2. Rearrange product load to improve air circulation. 3. Clean condenser coil.
Suction line frosted or sweating.	1. Overcharge of refrigerant. 2. Evaporator fan not running. 3. Expansion valve stuck open. 4. Expansion valve superheat too low.	1. Evacuate and re-charge. 2. Determine reason and correct. 3. Clean valve, evacuate and re-charge. 4. Adjust superheat to required setting.
Liquid line frosted, cold or sweating.	1. Restriction in drier strainer. 2. Liquid line service valve partially closed.	1. Replace drier, evacuate and re-charge. 2. Open valve fully or replace if necessary.
Noisy condensing unit.	1. Loose parts or mounting. 2. Tubing rattle or vibration. 3. Bent fan blade causing excessive vibration. 4. Fan bearings worn.	1. Tighten all mounting parts and shroud cover. 2. Reform tubing to be free of contact. 3. Replace fan blade. 4. Replace fan motor.
Thermometer reads different than actual temperature.	1. Calibration. 2. Defective.	1. Consult Operations Manual and calibrate. 2. Replace.
Water leak inside unit.	1. Condensate drain pan not installed properly. 2. Unit not level. 3. Drain pan misaligned. 4. Defective drain pan.	1. Consult Operations Manual for install instructions. 2. Make sure unit is level or pitched back slightly. 3. Make sure drain pan is aligned properly. 4. Replace.
Doors misaligned.	1. Shifted during shipping.	1. Refer to Operation Manual for hinge adjustment.

Detection of flammable refrigerants
Under no circumstances shall any potential sources of ignition be used in the searching for or detection of refrigerant leaks. A halide torch (or any other detector using a naked flame) shall not be used.

The following leak detection methods are deemed acceptable for all refrigerant systems:
Electronic leak detectors may be used to detect refrigerant leaks but, in the case of flammable refrigerants, the sensitivity might not be adequate, or might need recalibration. (Detection equipment shall be calibrated in a refrigerant-free area.)
Ensure that the detector is not a potential source of ignition and is suitable for the refrigerant used. Leak detection equipment shall be set at a percentage of the LFL of the refrigerant and shall be calibrated to the refrigerant employed, and the appropriate percentage of gas (25 % maximum) is confirmed.
Leak detection fluids are also suitable for use with most refrigerants but the use of detergents containing chlorine shall be avoided as the chlorine can react with the refrigerant and corrode the copper pipe-work. NOTE Examples of leak detection fluids are – bubble method, – fluorescent method agents.

If a leak is suspected, all naked flames shall be removed/extinguished. If a leakage of refrigerant is found which requires brazing, all of the refrigerant shall be recovered from the system, or isolated (by means of shut off valves) in a part of the system remote from the leak. Removal of refrigerant shall be according to Removal and evacuation below.

Removal and evacuation
When breaking into the refrigerant circuit to make repairs – or for any other purpose – conventional procedures shall be used. However, for flammable refrigerants it is important that best practice be followed, since flammability is a consideration. The following procedure shall be adhered to:
1. safely remove refrigerant following local and national regulations;
2. purge the circuit with inert gas;
3. evacuate (optional for A2L);
4. purge with inert gas (optional for A2L);
5. open the circuit by cutting or brazing.

The refrigerant charge shall be recovered into the correct recovery cylinders if venting is not allowed by local and national codes. For appliances containing flammable refrigerants the system shall be purged with oxygen-free nitrogen to render the appliance safe for flammable refrigerants. This process might need to be repeated several times. Compressed air or oxygen shall not be used for purging refrigerant systems.

For appliances containing flammable refrigerants, refrigerants purging shall be achieved by breaking the vacuum in the system with oxygen-free nitrogen and continuing to fill until the working pressure is achieved, then venting to atmosphere, and finally pulling down to a vacuum (optional for A2L). This process shall be repeated until no refrigerant is within the system (optional for A2L). When the final oxygen-free nitrogen charge is used, the system shall be vented down to atmospheric pressure to enable work to take place.

Ensure that the outlet for the vacuum pump is not close to any potential ignition sources and that ventilation is available.

Charging procedures
In addition to conventional charging procedures, the following requirements shall be followed.
1. Ensure that contamination of different refrigerants does not occur when using charging equipment. Hoses or lines shall be as short as possible to minimize the amount of refrigerant contained in them.
2. Cylinders shall be kept in an appropriate position according to the instructions.
3. Ensure that the refrigerating system is earthed prior to charging the system with refrigerant.
4. Label the system when charging is complete (if not already).
5. Extreme care shall be taken not to overfill the refrigerating system.
Prior to recharging the system, it shall be pressure-tested with the appropriate purging gas. The system shall be leak-tested on completion of charging but prior to commissioning. A follow up leak test shall be carried out prior to leaving the site.

WARRANTY (all models utilizing R-290 refrigerant)

United States of America & Canada

SEVEN (7) YEAR PARTS, LABOR AND COMPRESSOR WARRANTY

National Refrigeration & Air Conditioning Products, Inc., d/b/a Continental Refrigerator, warrants to the original purchaser of every new Continental Refrigerator self-contained unit that all parts and equipment, including the R-290 compressor, are free from defects in material and workmanship, under normal use, proper maintenance and service for a period of seven (7) years from the date of installation, or eighty-seven (87) months from the date of shipment from Continental Refrigerator, whichever comes first. Normal use, proper maintenance and service refers specifically to the actions and descriptions detailed in the Continental Refrigerator Installation and Operations Manual. This warranty does not cover normal wear parts such as light bulbs and gaskets.

Improper operation due to incorrect installation, negligent or improper cleaning and maintenance, out-of-tolerance voltage conditions, inadequate wiring, and accidental damage are not manufacturing defects and not covered under this warranty. Purchasers must clean condenser coils regularly to avoid warranty voidance. The manual recommends monthly cleaning.

This warranty excludes adjustments such as cabinet leveling, hinge modifications, caster or leg adjustments, and control settings. This warranty excludes damage caused by water and/or moisture from other appliances, or damage due to improper cleaning. This warranty excludes equipment failure resulting from unauthorized modifications to the unit.

Continental Refrigerator will repair or replace, including labor, any defective part of the product. We reserve the right to inspect any claimed defect, and the warranty applies only if our examination finds the parts, equipment, or compressor defective. The use of non-authorized services or non-OEM parts voids the validity of this warranty. Defective parts must be returned to us within thirty (30) days. The return should include the cabinet model, serial number, and a return material authorization number provided by the manufacturer. This warranty does not cover any shipping costs.

The labor warranty covers self-contained units only, during standard working hours, and excludes overtime rates. Before employing labor, the purchaser must contact the factory for service authorization by calling directly or requesting service through our website. To be covered, purchasers must supply a labor invoice along with the service authorization number within thirty (30) days of the date of completion. In any event, all work must be completed within ninety (90) days of the service authorization date. This warranty does not cover special installations or applications, including those in remote locations. Any installation that requires additional work or travel to access the unit for service is the responsibility of the purchaser.

THIS WARRANTY REPLACES ALL OTHER EXPRESS, IMPLIED, OR STATUTORY WARRANTIES, INCLUDING IMPLIED WARRANTIES OF MERCHANTABILITY AND FITNESS FOR A PARTICULAR PURPOSE, WHICH ARE HEREBY DISCLAIMED. WE DO NOT ASSUME, NOR AUTHORIZE OTHERS TO ASSUME, ANY OBLIGATION OR LIABILITY RELATED TO THE SALE OF THESE PRODUCTS.

This warranty is valid only for the original purchaser and cannot be assigned.

This warranty is void outside the USA and Canada and does not cover misuse, neglect, alteration, accidents, or damage from transportation, flood, fire, acts of terrorism, acts of God, or natural disasters, as determined solely by Continental Refrigerator.

CONTINENTAL REFRIGERATOR SHALL IN NO EVENT BE LIABLE FOR CONSEQUENTIAL OR SPECIAL DAMAGES, INCLUDING INDIRECT, PUNITIVE, LOSS OF USE, PRODUCT LOSS, DOWNTIME, OR LOST PROFITS, RELATED TO THE PRODUCT OR ITS USE. THE PURCHASER'S REMEDIES ARE EXCLUSIVE. CONTINENTAL REFRIGERATOR'S TOTAL LIABILITY WILL NOT EXCEED THE PURCHASE PRICE OF THE COMPONENT IN QUESTION, REGARDLESS OF CONTRACT, WARRANTY, NEGLIGENCE, INDEMNIFICATION, STRICT LIABILITY, TORT, OR OTHER GROUNDS.

See our Service Guideline at http://www.continentalrefrigerator.com/service-parts/ for additional information regarding service and warranty coverage.

Continental®
Refrigerator

A Division of Aeritek
539 Dunksferry Road • Bensalem, PA 19020-5908
P 215-244-1400 • 1-800-523-7138 • F 215-244-9579
www.continentalrefrigerator.com

IM-Griddle-Orange-50165-20250401