S/M No: FRSU20IA01

Service Manual

Refrigerator

MODEL : FRS(N)-U20IA* / FRU-571I~
FRS(N)-U20DA* / FRU-541D~
FRS(N)-U20EA* / FRU-541E~
FRS(N)-U20FA* / FRU-541F~
FRS(N)-U20GA* / FRU-541G~

✔ Caution

: In this Manual, some parts can be changed for improving, their performance without notice in the parts list. So, if you need the latest parts information,please refer to PPL(Parts Price List) in Service Information Center

DAEWOO ELECTRONICS

July . 2005

12. EXPLODED VIEW & PARTS LIST

12-1. FRS(N)-U20IA

CABINET

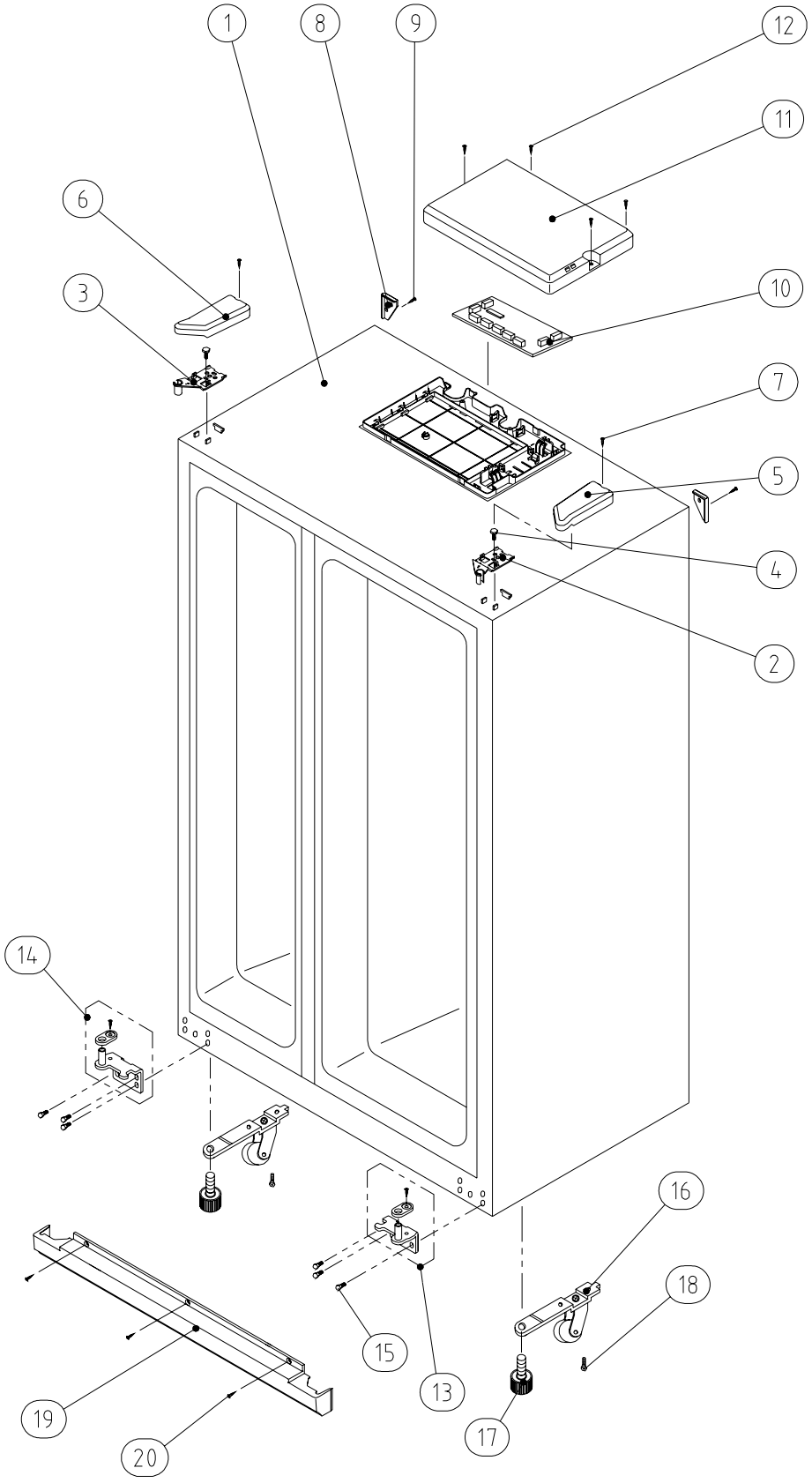

MECH ROOM

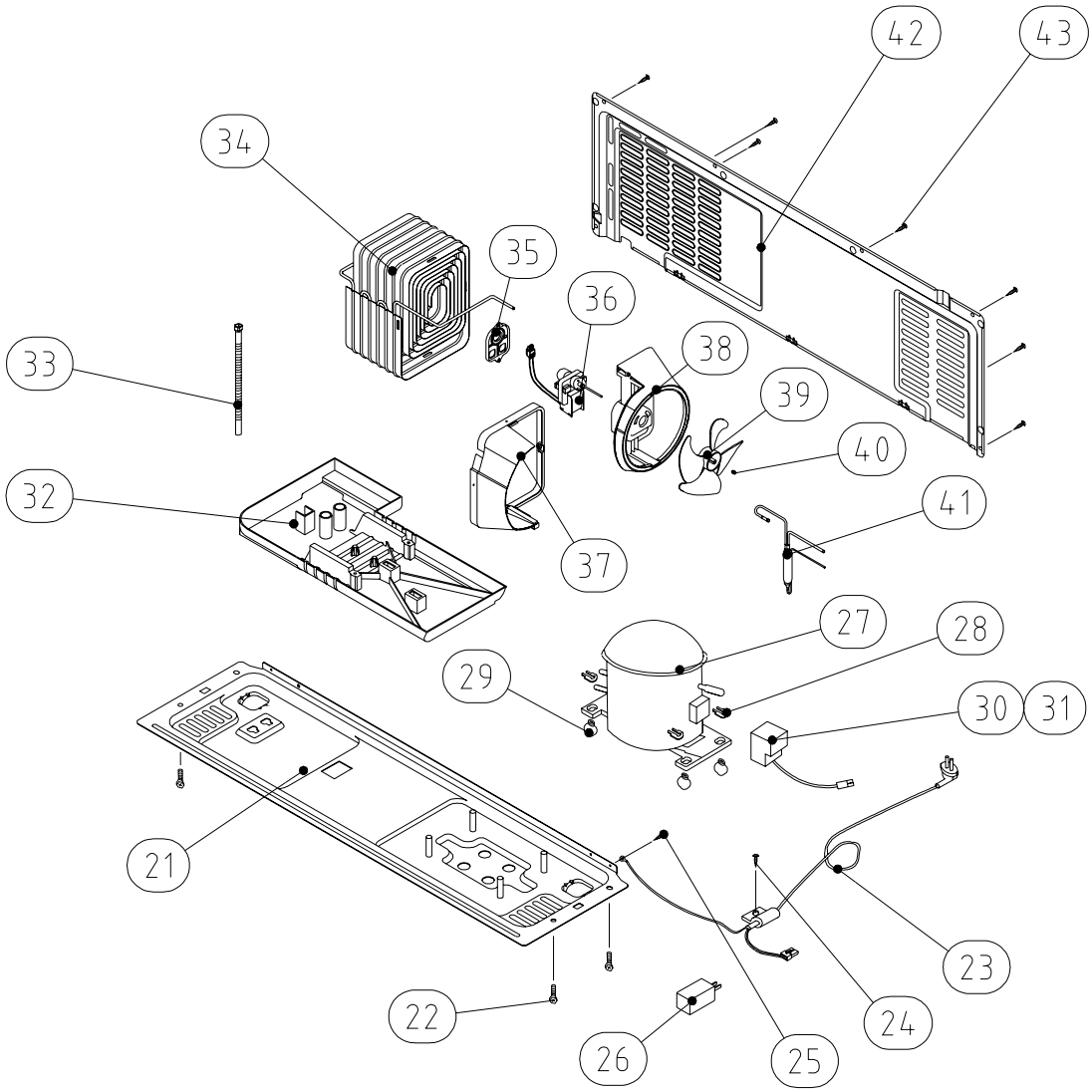

R ROOM

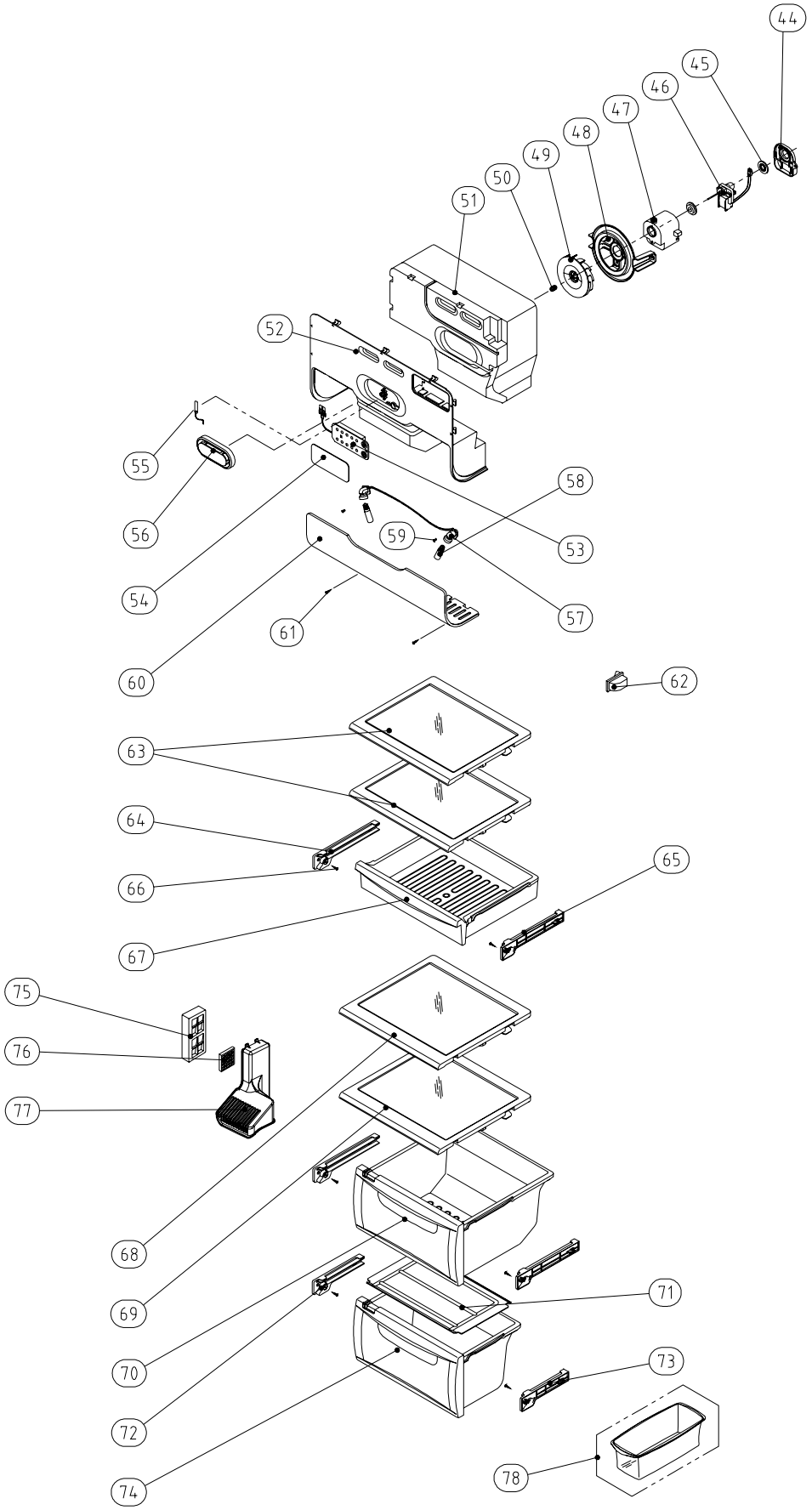
44
45
46
47
48
49
50
51
52
53
54
55
56
57
58
59
60
61
62
63
64
65
66
67
68
69
70
71
72
73
74
75
76
77
78

F ROOM

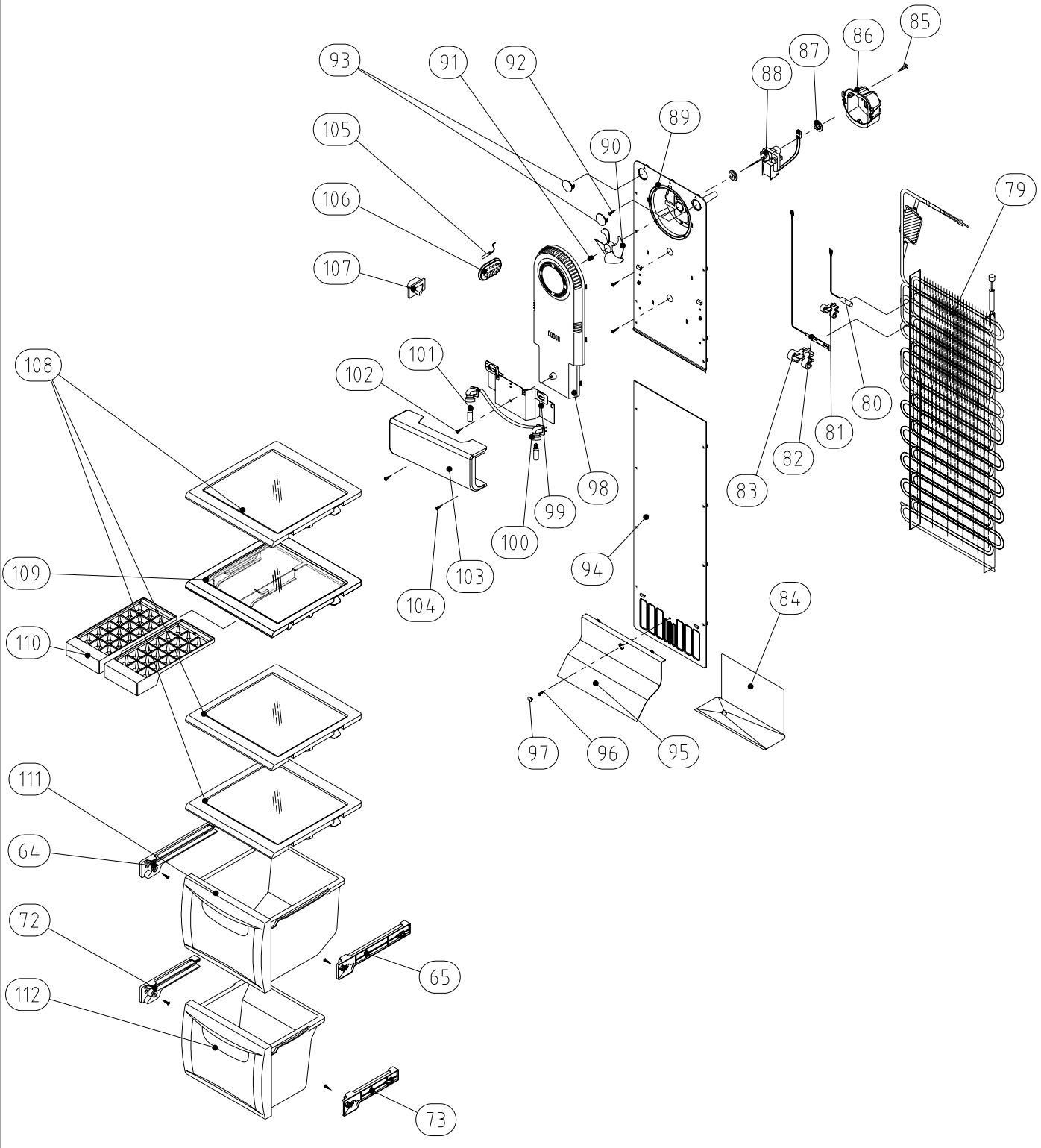
93
91
92
105
106
107
90
89
88
87
86
85
79
80
81
82
83
108
101
102
98
99
100
103
104
109
110
111
64
72
112
65
73
94
84
97
96
95

F DOOR

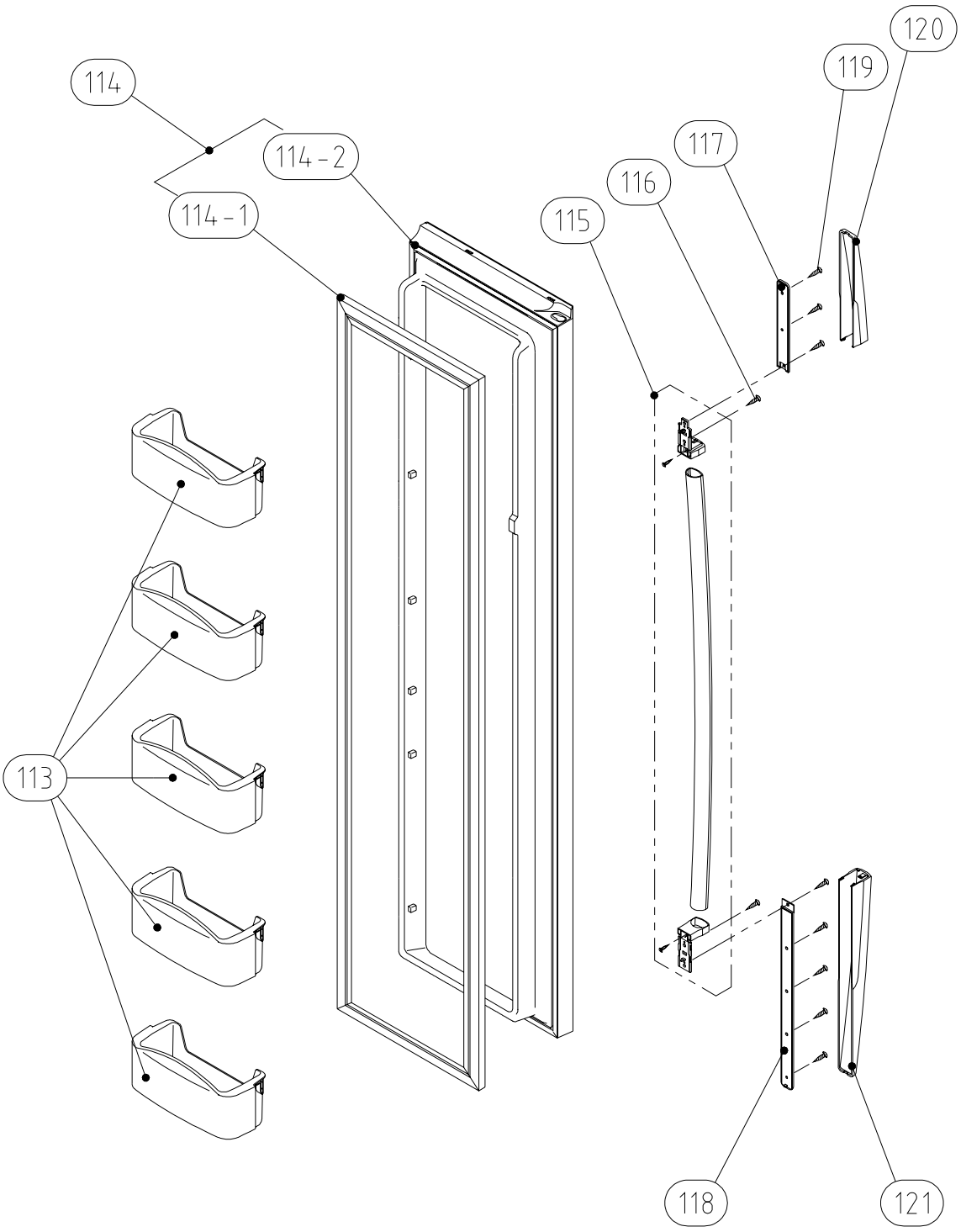

R DOOR

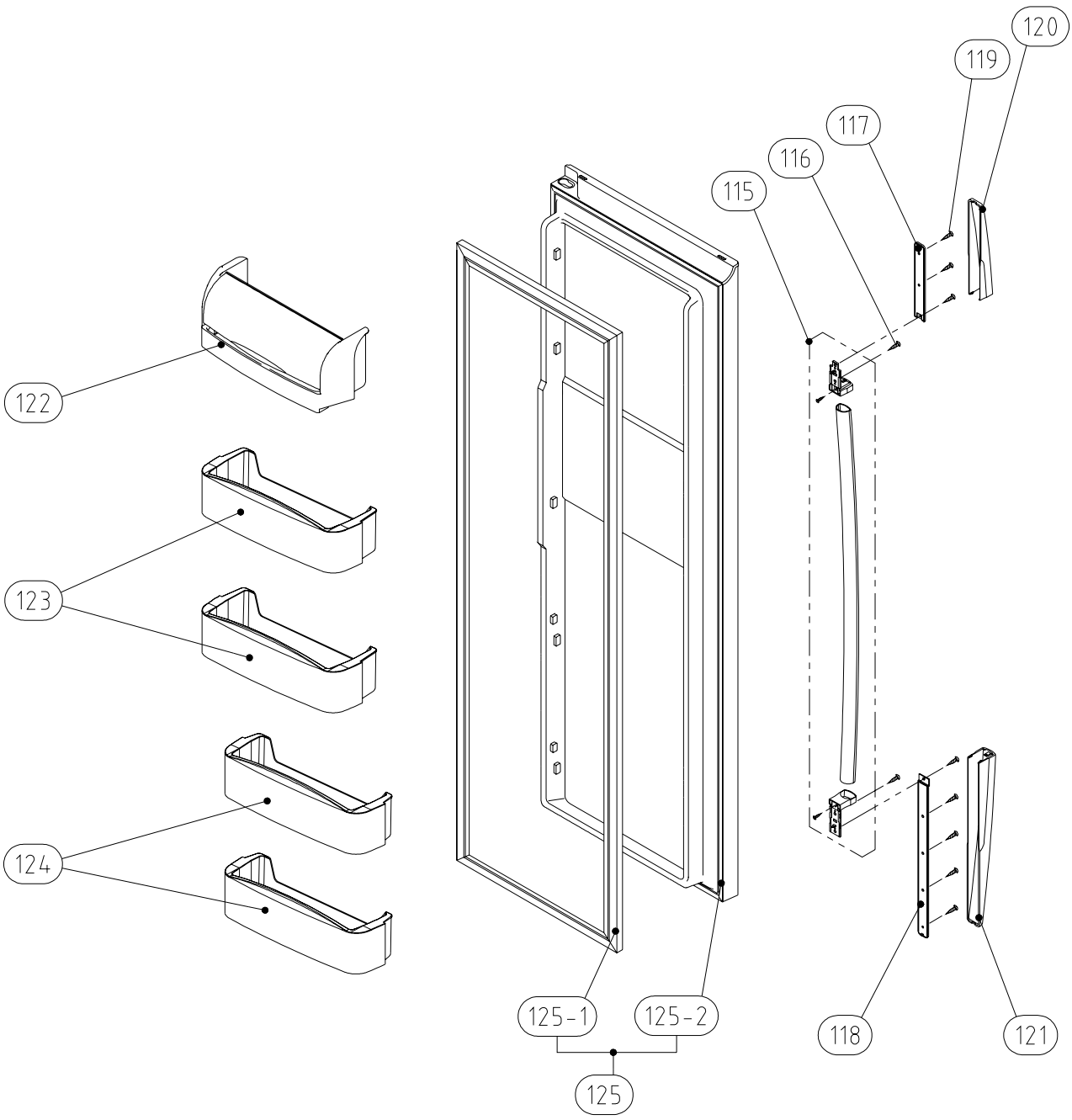

NO	PART CODE	PART NAME	Q'ty	SPECIFICATION	REMARK
1	3000057700	ASSY CAB URT	1	FRU-571I	
2	3012924400	HINGE *T *R AS	1	PO T3.0+PAINT	
3	3012924300	HINGE *T *L AS	1	PO T3.0+PAINT	
4	3016042300	SPECIAL *T HI BOLT	2	6X13 SWCH18A	
5	3011446200	COVER *T HI *R	1	PP	
6	3011446100	COVER *T HI *L	1	PP	
7	7112401211	SCREW TAPPING	2	T1 TRS 4X12 MFZN	
8	3010968400	CAP CAB COVER	2	PP	
9	7112401211	SCREW TAPPING	2	T1 TRS 4X12 MFZN	
10	30143D6060	PCB MAIN AS	1	FRU-571I	
11	3011446000	COVER MAIN PCB BOX	1	PP(V-235)	
12	7112401211	SCREW TAPPING	4	T1 TRS 4X12 MFZN	
13	3012924000	HINGE *U *R AS	1	P/O T5.0 + PAINT	
14	3012923900	HINGE *U *L AS	1	P/O T5.0 + PAINT	
15	3016001240	SPECIAL BOLT *T	6	6X22 SWCH22A(YL)	
16	3010657200	BRACKET ADJ FOOT	2	SPCC T3.0	
17	3012105100	FOOT ADJ AS	2	PP	
18	3016001240	SPECIAL BOLT *T	2	6X22 SWCH22A(YL)	
19	3011447200	COVER CAB BRKT	1	PP	
20	7142401511	SCREW TAPPING	3	T2 TRS 4X16 MFZN	
21	3010340400	BASE COMP AS	1	FRU-571I	
22	3016003300	SPEICAL BOLT	4	T2 M6.5X20	
23	3011346700	CORD POWER AS	1	FRU-571I	
24	7112401211	SCREW TAPPING	1	T1 TRS 4X12 MFZN	
25	7051401065	SCREW MACHINE	1	PAN 4X10 SW BSNI	
26	3016401920	CAPACITOR RUN	1	400VAC 5UF	
27	3956183D50	COMP	1	MK183Q-L2U	
28	3016002500	SPECIAL WASHER	4	SK-5, T0.8	
29	3010101600	RUBBER ABSORBER COMP	4	NBR	
30	3018129600	SWITCH P RELAY AS	1	265RHB,330	
31	3811402100	COVER RELAY	1	DS3-3NORYL S/S	
32	3011181300	CASE VAPORI AS	1	PP	
33	3013201710	HOSE DRN B	1	PE FRB-5970NB	
34	3014461510	PIPE WICON AS	1	TSW OD4.76XT0.7	
35	3012021700	FIXTURE MOTR	1	PP	
36	3015916100	MOTOR C FAN AS	1	DC-2213DWCA-3	
37	3018500300	M/BELL B	1	PP	
38	3018500200	M/BELL A	1	PP	
39	3011834700	FAN	1	ABS OD3.17XD150	

NO	PART CODE	PART NAME	Q'ty	SPECIFICATION	REMARK
40	3011200500	CLAMP FAN	1	SUS 304	
41	3016808100	DRYER AS	1	C1220T-M OD19.05XL135	
42	3011497000	COVER MACH ROOM AS	1	SBHG T0.35	
43	7112401211	SCREW TAPPING	7	T1 TRS 4X12 MFZN	
44	3012214100	FRAME CHECK VALVE AS	1	FRU-571I	
45	3012023700	FIXTURE MOTOR S3	1	PP(NATURAL)	
46	3010107100	ABSORBER MOTOR	2	NBR	
47	3015916000	MOTOR R FAN AS	1	D4612AAA20	
48	3012023900	FIXTURE MOTOR S2	1	PP(NATURAL)	
49	3012023800	FIXTURE MOTOR S1	1	PP(NATURAL)	
50	3011835400	FAN R	1	ABS OD3.17XD110	
51	3011200510	CLAMP FAN	1	SUS 304	
52	3013357300	INSU DAMP AS	1	F-PS	
53	3011444400	COVER DAMP	1	PP	
54	3014235200	PANEL INNER CONTROL AS	1	PC-FILM	
55	3014570900	PLATE INNER CONTROL	1	PC-FILM	
56	3014807100	SENSOR R AS	1	PBN-43B	
57	3011445700	COVER R SENSOR	1	ABS+SPRAY	
58	3017906500	SOCKET R LAMP AS	1	250V/1A	
59	3013602500	LAMP	2	AC 240V 25W(S)	
60	7121300811	SCREW TAPPING	2	T2S PAN 3X8	
61	3015510800	WINDOW R LAMP	1	MIPS	
62	3016002720	SPECIAL CAP SCREW	2	SM18C	
63	3018124000	SWITCH LAMP *R	1	SP201R-7DR	
64	3017842810	SHELF R A AS	2	FRAME+NUDE GLASS+FIX	
65	3012514500	GUIDE CASE A *L AS	3	ABS	
66	3012514600	GUDIE CASE A *R AS	3	ABS	
67	7122401611	SCREW TAPPING	10	T2S TRS 4X16 MFZN	
68	3011185700	CASE CHILD	1	GPPS	
69	3017843300	SHELF R C AS	1	FRAME+NUDE GLASS+FIX	
70	3017842910	SHELF R B AS	1	FRAME+NUDE GLASS+FIX	
71	3011114600	CASE VEGETB B AS	1	CASE+SILK+FRAME+KNOB	
72	3011446700	COVER VEGETB CASE B	1	GPPS	
73	3012529700	GUIDE CASE C *L AS	2	ABS	
74	3012529800	GUIDE CASE C *R AS	2	ABS	
75	3011114700	CASE VEGETB C AS	1	CASE+SILK+FRAME+KNOB	
76	3018701800	DEO ANTI AS	1	W40XT5XL40	
77	3011445900	COVER RETURN DUCT	1	PP	
78	3011171310	CASE EGG AS	1	CASE+VINYL	

NO	PART CODE	PART NAME	Q'ty	SPECIFICATION	REMARK
79	3017053500	EVA AS	1	FRU-571I	
79-1	3012818300	HEATER SHEATH AS	1	AC220V/ 192W	
79-2	3014806900	SENSOR D AS	1	PBN-43	
79-3	3012023600	FIXTURE D SENS	1	PP	
79-4	3017202000	FUSE TEMP AS	1	AC250V 10A 77C	
79-5	4017Z90590	FIXTURE FUSE TEMP	1	PP	
80	3012529000	GUIDE DRN	1	GA	
81	7122401211	SCREW TAPPING	1	T2S TRS 4X12 MFZN	
82	3012007800	FIXTURE MOTOR A	1	HIPS	
83	3010107100	ABSORBER MOTOR	2	NBR	
84	3015915900	MOTOR F FAN	1	D4612AAA21	
85	3018921300	LOUVER F A	1	ABS	
86	3011834500	FAN	1	ABS OD3.17XD130	
87	3011200510	CLAMP FAN	1	SUS 304	
88	7122401611	SCREW TAPPING	3	T2S TRS 4X16 MFZN	
89	3010968600	CAP F LOUVER B	2	HIPS	
90	3018921500	LOUVER F B AS	1	HIPS	
91	3011443200	COVER F RETURN	1	HIPS	
92	7122401611	SCREW TAPPING	1	T2S TRS 4X16 MFZN	
93	3010924600	CAP F LOUVER	2	HIPS	
94	3001401700	COVER F FAN AS	1	FRU-571I	
95	3014531900	PLATE F LAMP	1	SGCC T0.8	
96	3017906600	SOCKET F LAMP AS	1	250V 1A	
97	3013602500	LAMP	1	240V 25W	
98	7112401211	SCREW TAPPING	1	T1 TRS 4X12 MFZN	
99	3015510700	WINDOW F LAMP	1	MIPS	
100	3016002720	SPECIAL CAP SCREW	2	SM18C	
101	3014807000	SENSOR F AS	1	PT-38	
102	3011442600	COVER F SENS	1	ABS	
103	3018124010	SWITCH LAMP *L	1	SP201R-7DL	
104	3017842610	SHELF F AS	3	FRAME+NUDE GLASS+FIX	
105	3017842700	SHELF F ICE AS	1	FRAME+NUDE GLASS+FIX	
106	3011186300	CASE ICING	2	PP	
107	3011114800	CASE F A AS	1	CASE+SILK+FRAME	
108	3011114900	CASE F B AS	1	CASE+SILK+FRAME	
109	3019026600	POCKET F	5	HIPS+SILK	
110	3000060400	ASSY F DR	1	FRU-571I	
110-1	3012318800	GASKET F DR AS	1	PVC	
110-2	3000057900	ASSY F DR URT	1	FRU-571I	

NO	PART CODE	PART NAME	Q'ty	SPECIFICATION	REMARK
111	3012641500	HANDLE AS	1	FRU-571I	
112	3016002700	SPECIAL SCREW	2	WASR+TRS5X16 MFZN	
113	3010339500	BASE HANDLE *T	1	HIPS	
114	3010339600	BASE HANDLE *U	1	HIPS	
115	7112401211	SCREW TAPPING	8	T1 TRS 4*12 MFZN	
116	3011446400	COVER HNDL DECO *T	1	ABS+SPRAY	
117	3011446500	COVER HNDL DECO *U	1	ABS+SPRAY	
118	3019027500	POCKET DAIRY AS	1	POCKET+COVER	
119	3019026800	POCKET R	2	HIPS+SILK	
120	3019026900	POCKET R *S	2	HIPS+SILK	
121	3000060500	ASSY R DR	1	FRU-571I	
121-1	3012318900	GASKET R DR AS	1	PVC	
121-2	3000058000	ASSY R DR URT	1	FRU-571I	

12-2. FRS(N)-U20DA

CABINET

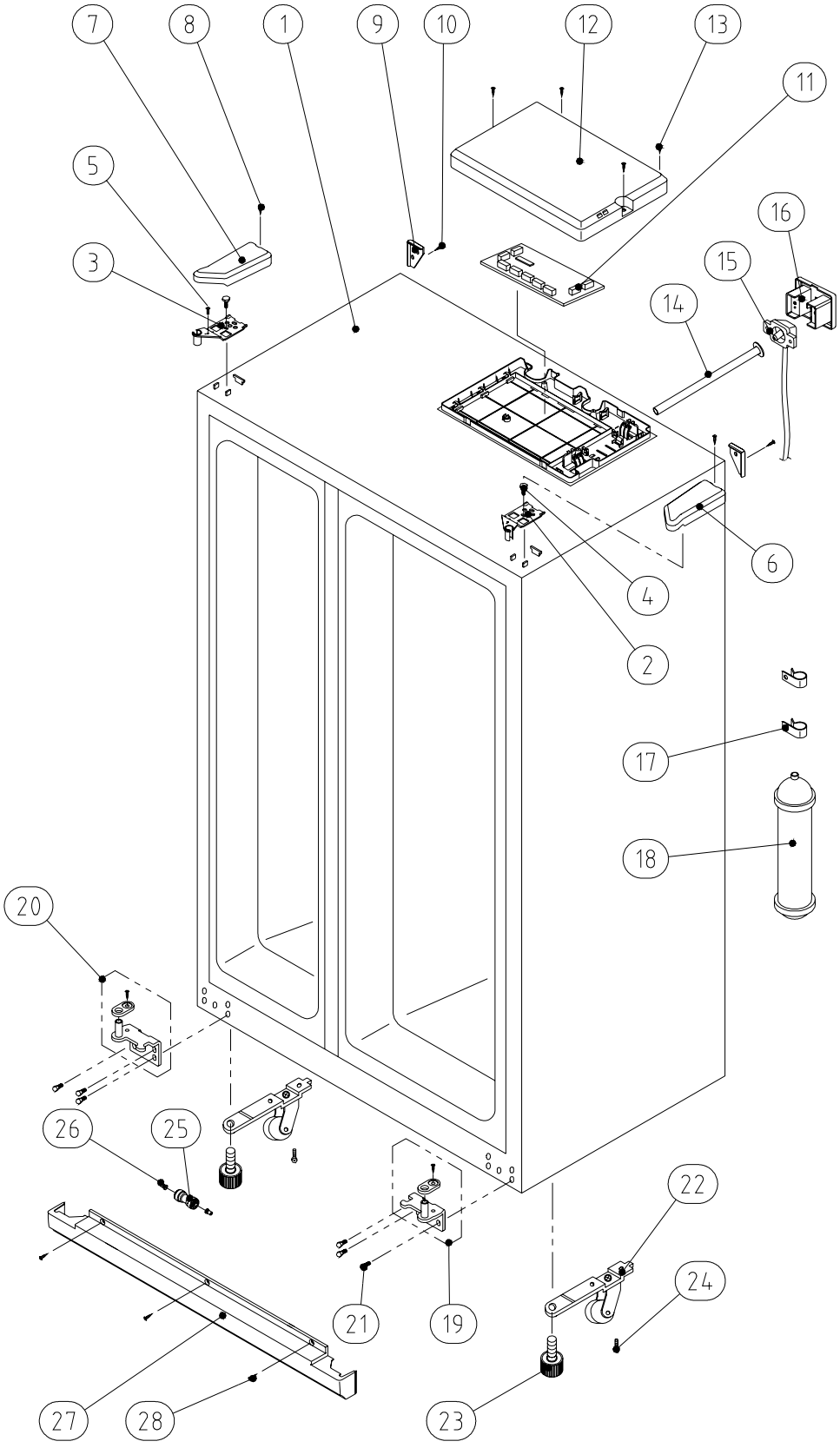

MECH ROOM

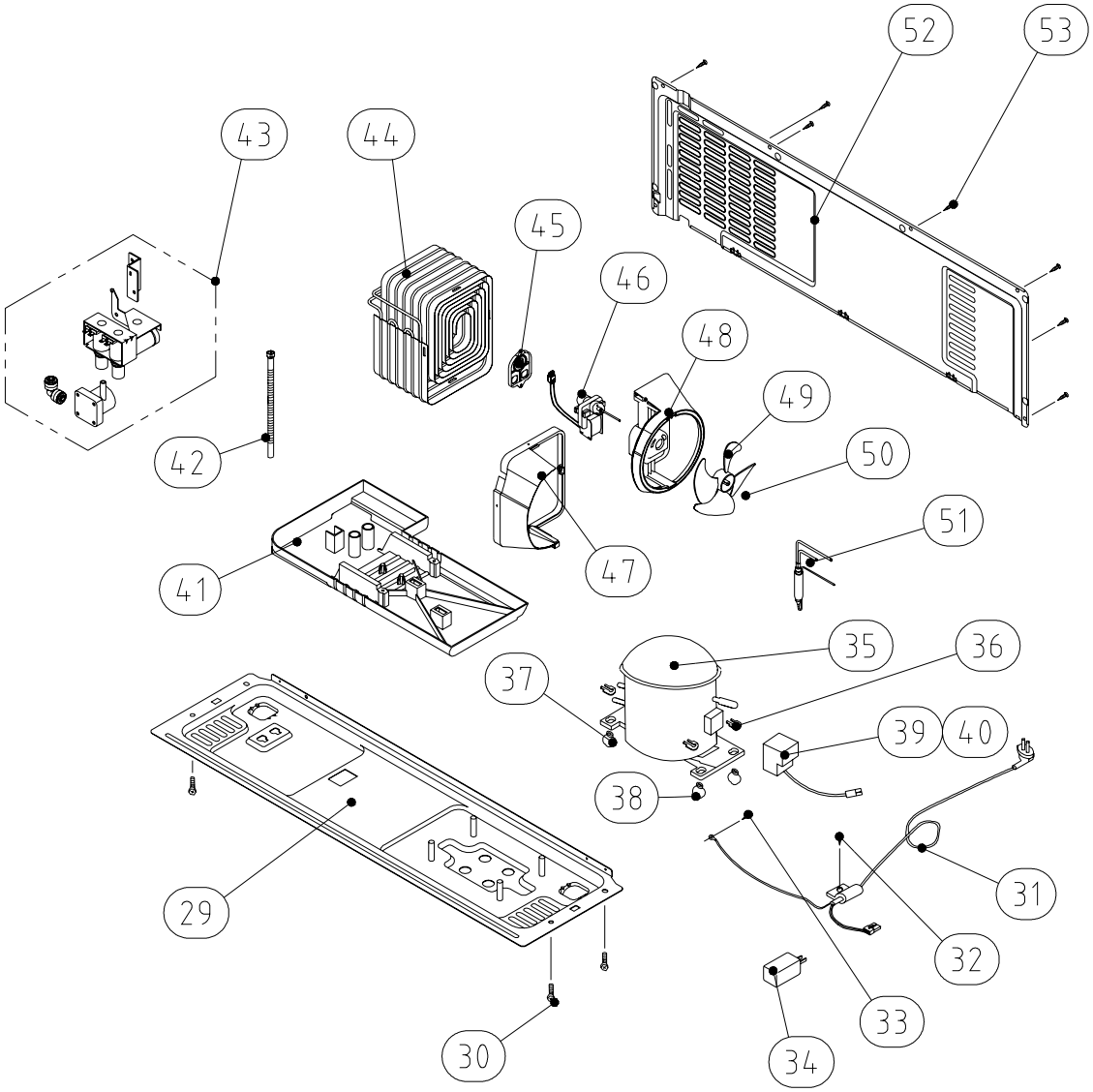
52
53
43
44
45
46
48
49
50
42
51
41
47
35
36
37
39
40
38
31
32
29
33
30
34

R ROOM

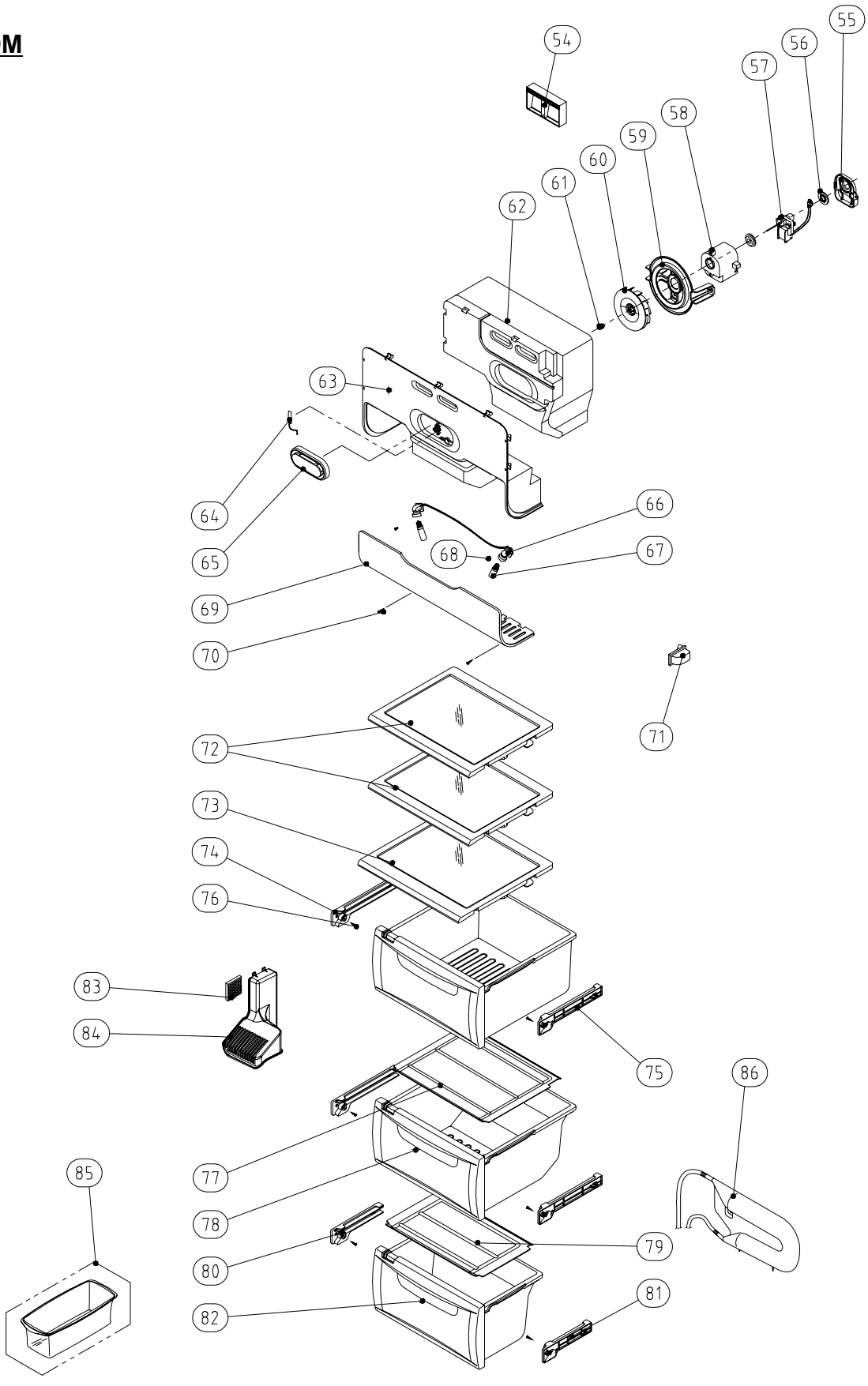
54
55
56
57
58
59
60
61
62
63
64
65
66
67
68
69
70
71
72
73
74
76
83
84
75
86
85
77
78
79
80
81
82

F ROOM

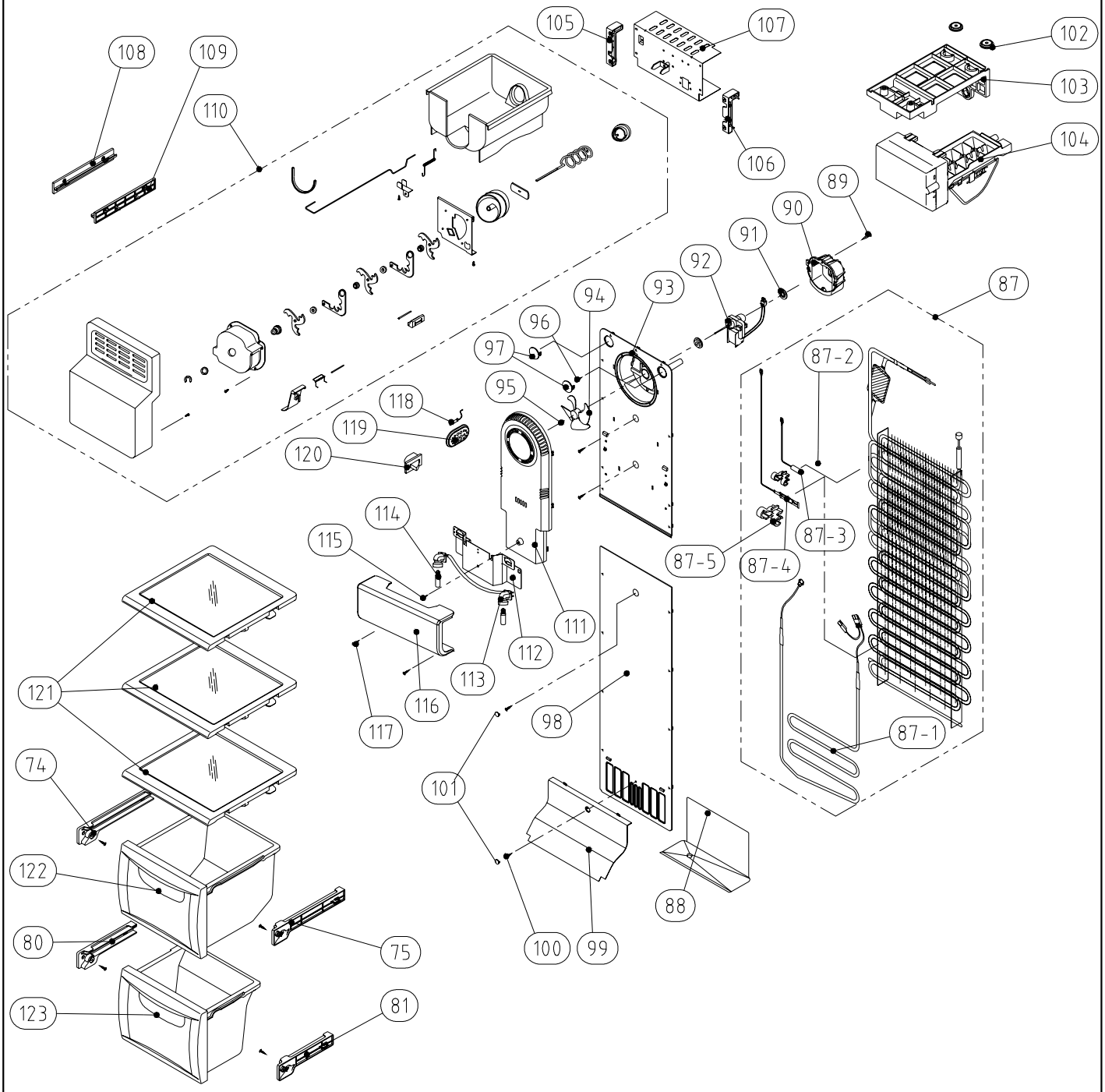
105
107
102
108
109
103
110
106
104
89
90
91
92
87
93
94
96
97
87-2
95
118
119
120
114
115
87-5
87-4
87-3
111
112
113
116
117
98
87-1
121
74
101
122
88
80
75
100
99
123
81

F DOOR

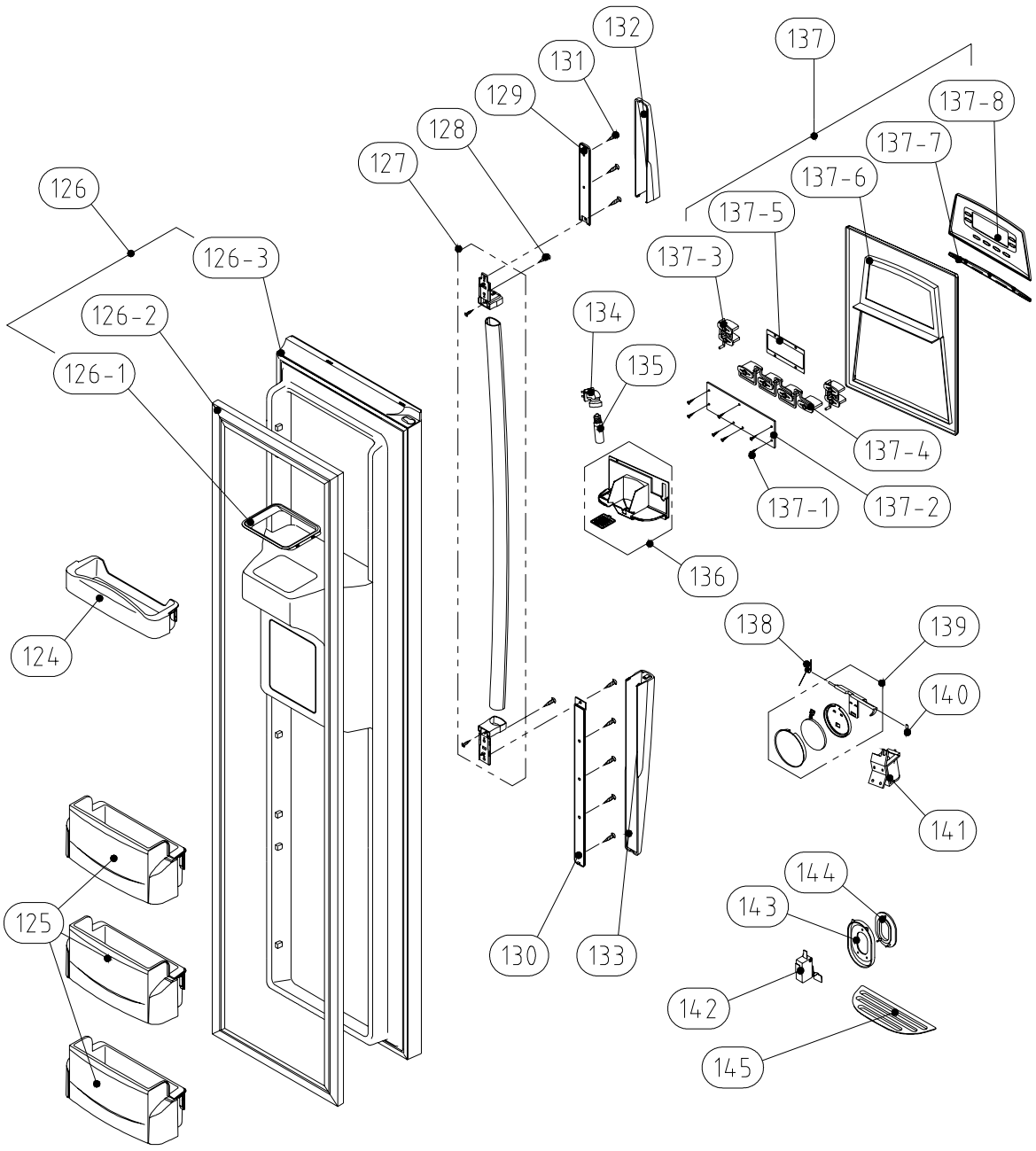
126
126-3
126-2
126-1
124
125
127
128
129
131
132
130
133
134
135
136
137
137-8
137-7
137-6
137-5
137-3
137-4
137-1
137-2
138
139
140
141
144
143
142
145

R DOOR

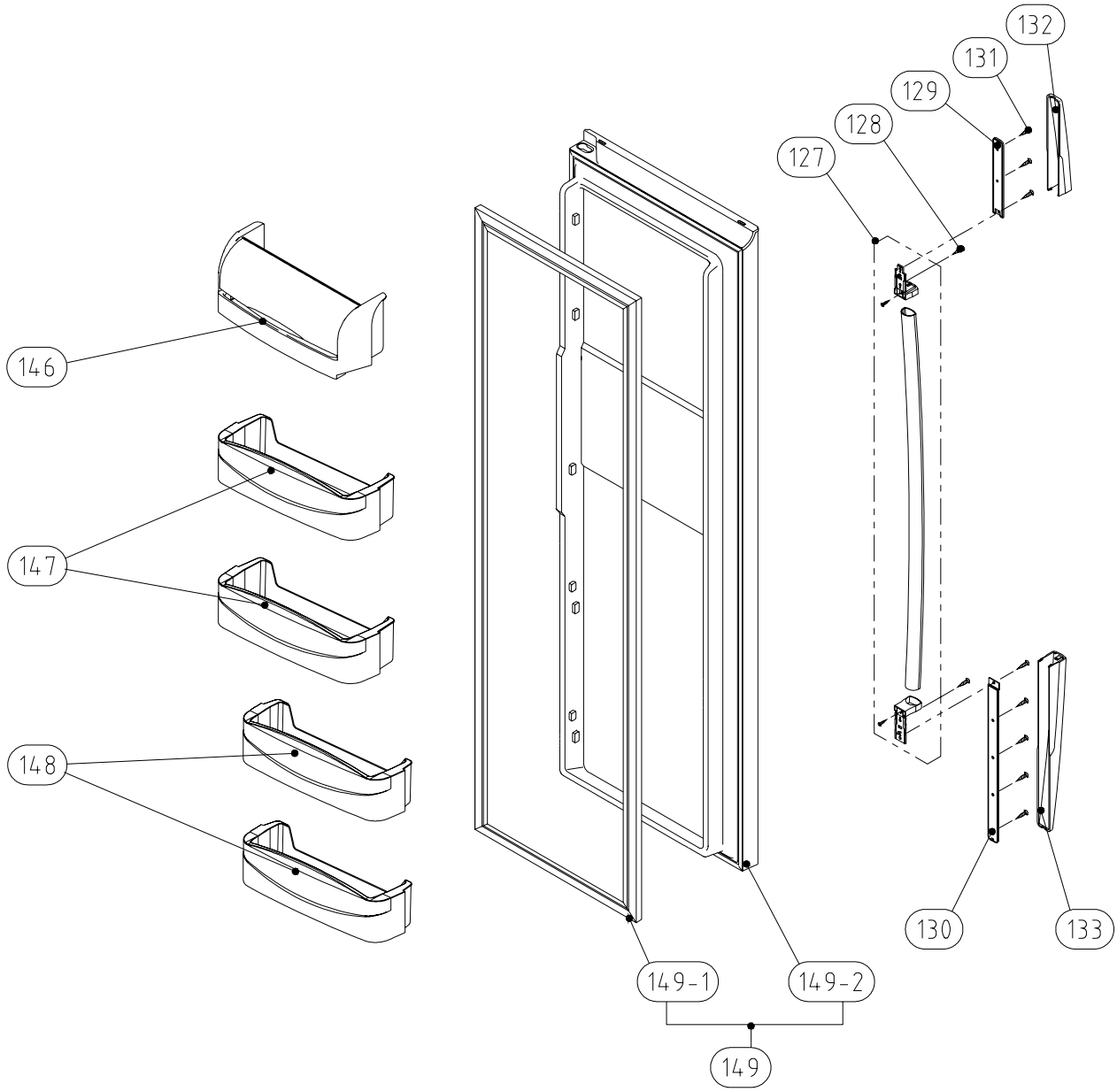

NO	PART CODE	PART NAME	Q'ty	SPECIFICATION	REMARK
1	3000057710	ASSY CAB URT	1	FRU-541D	
2	3012924400	HINGE *T *R AS	1	PO T3.0+PAINT	
3	3012924300	HINGE *T *L AS	1	PO T3.0+PAINT	
4	3016042300	SPECIAL *T HI BOLT	2	6X13 SWCH18A	
5	7051401065	SCREW MACHINE	1	PAN 4X10 SW BSNI	
6	3011446200	COVER *T HI *R	1	PP	
7	3011446100	COVER *T HI *L	1	PP	
8	7112401211	SCREW TAPPING	2	T1 TRS 4X12 MFZN	
9	3010968400	CAP CAB COVER	2	PP	
10	7112401211	SCREW TAPPING	2	T1 TRS 4X12 MFZN	
11	30143D5060	PCB MAIN AS	1	FRU-541D	
12	3011446000	COVER MAIN PCB BOX	1	PP(V-235)	
13	7112401211	SCREW TAPPING	4	T1 TRS 4X12 MFZN	
14	3013224800	HOSE ICE MAKER TUBE AS	1	FRU-541D	
15	3012530200	GUIDE CAB W/TUBE A AS	1	FRU-541D	
16	3011444100	COVER GUIDE CAB W/T A	1	HIPS	
17	3011202000	CLAMP WATER TUBE A	2	PA-66, 5N	
18	3019974800	S/PAER FILTER WATER AS	1	FR-S660CW	
19	3012924000	HINGE *U *R AS	1	P/O T5.0 + PAINT	
20	3012923900	HINGE *U *L AS	1	P/O T5.0 + PAINT	
21	3016001240	SPECIAL BOLT *T	6	6X22 SWCH22A(YL)	
22	3010657200	BRACKET ADJ FOOT	2	SPCC T3.0	
23	3012105100	FOOT ADJ AS	2	PP	
24	3016001240	SPECIAL BOLT *T	2	6X22 SWCH22A(YL)	
25	3013064200	HOLDER TUBE A	1	ACETAL	
26	3012019500	FIXTURE TUBE FIT B	2	PP	
27	3011447200	COVER CAB BRKT	1	PP	
28	7142401511	SCREW TAPPING	3	T2 TRS 4X16 MFZN	
29	3010340400	BASE COMP AS	1	FRU-571I	
30	3016003300	SPEICAL BOLT	4	T2 M6.5X20	
31	3011346700	CORD POWER AS	1	FRU-571I	
32	7112401211	SCREW TAPPING	1	T1 TRS 4X12 MFZN	
33	7051401065	SCREW MACHINE	1	PAN 4X10 SW BSNI	
34	3016401920	CAPACITOR RUN	1	400VAC 5UF	
35	3956145250	COMP	1	MK4A5Q-R1U	
36	3016002500	SPECIAL WASHER	4	SK-5, T0.8	
37	3010101600	RUBBER ABSORBER COMP	2	NBR	
38	3010101480	ABSORBER COMP AS	2	FRU-541D	
39	3018129600	SWITCH P RELAY AS	1	265RHB,330	

NO	PART CODE	PART NAME	Q'ty	SPECIFICATION	REMARK
40	3811402200	COVER RELAY	1	MK4A5Q-R1U S/S (R600A)	
41	3011181300	CASE VAPORI AS	1	PP	
42	3013201710	HOSE DRN B	1	PE FRB-5970NB	
43	3015402300	VALVE WATER AS	1	FR-S660CW	
44	3014461510	PIPE WICON AS	1	TSW OD4.76XT0.7	
45	3012021700	FIXTURE MOTR	1	PP	
46	3015916100	MOTOR C FAN AS	1	DC-2213DWCA-3	
47	3018500300	M/BELL B	1	PP	
48	3018500200	M/BELL A	1	PP	
49	3011834700	FAN	1	ABS OD3.17XD150	
50	3011200500	CLAMP FAN	1	SUS 304	
51	3016808100	DRYER AS	1	C1220T-M OD19.05XL135	
52	3011497000	COVER MACH ROOM AS	1	SBHG T0.35	
53	7112401211	SCREW TAPPING	7	T1 TRS 4X12 MFZN	
54	3012214100	FRAME CHECK VALVE AS	1	FRU-571I	
55	3012023700	FIXTURE MOTOR S3	1	PP(NATURAL)	
56	3010107100	ABSORBER MOTOR	2	NBR	
57	3015916000	MOTOR R FAN AS	1	D4612AAA20	
58	3012023900	FIXTURE MOTOR S2	1	PP(NATURAL)	
59	3012023800	FIXTURE MOTOR S1	1	PP(NATURAL)	
60	3011835400	FAN R	1	ABS OD3.17XD110	
61	3011200510	CLAMP FAN	1	SUS 304	
62	3013357300	INSU DAMP AS	1	F-PS	
63	3011445200	COVER DAMP	1	HIPS	
64	3014807100	SENSOR R AS	1	PBN-43B	
65	3011445700	COVER R SENSOR	1	ABS+SPRAY	
66	3017906500	SOCKET R LAMP AS	1	250V/1A	
67	3013602500	LAMP	2	AC 240V 25W(S)	
68	7121300811	SCREW TAPPING	2	T2S PAN 3X8	
69	3015510800	WINDOW R LAMP	1	MIPS	
70	3016002720	SPECIAL CAP SCREW	2	SM18C	
71	3018128600	SWITCH LAMP *R	1	SPF101B-1D	
72	3017842800	SHELF R A AS	2	FRAME+PRINTED GLASS+FIX	
73	3017842900	SHELF R B AS	1	FRAME+PRINTED GLASS+FIX	
74	3012514500	GUIDE CASE A *L AS	3	ABS	
75	3012514600	GUDIE CASE A *R AS	3	ABS	
76	7122401611	SCREW TAPPING	10	T2S TRS 4X16 MFZN	
77	3011446600	COVER VEGETB A	1	GPPS	
78	3011114600	CASE VEGETB B AS	1	CASE+SILK+FRAME+KNOB	

NO	PART CODE	PART NAME	Q'ty	SPECIFICATION	REMARK
79	3011446700	COVER VEGETB CASE B	1	GPPS	
80	3012529700	GUIDE CASE C *L AS	2	ABS	
81	3012529800	GUIDE CASE C *R AS	2	ABS	
82	3011114700	CASE VEGETB C AS	1	CASE+SILK+FRAME+KNOB	
83	3018701800	DEO ANTI AS	1	W40XT5XL40	
84	3011445900	COVER RETURN DUCT	1	PP	
85	3011171310	CASE EGG AS	1	CASE+VINYL	
86	3018201000	TANK WATER AS	1	FRU-541D	
87	3017053500	EVA AS	1	FRU-571I	
87-1	3012818300	HEATER SHEATH AS	1	AC220V/ 192W	
87-2	3014806900	SENSOR D AS	1	PBN-43	
87-3	3012023600	FIXTURE D SENS	1	PP	
87-4	301720200	FUSE TEMP AS	1	AC250V 10A 77C	
87-5	4017Z90590	FIXTURE FUSE TEMP	1	PP	
88	3012529000	GUIDE DRN	1	GA	
89	7122401211	SCREW TAPPING	1	T2S TRS 4X12 MFZN	
90	3012007800	FIXTURE MOTOR A	1	HIPS	
91	3010107100	ABSORBER MOTOR	2	NBR	
92	3015915900	MOTOR F FAN	1	D4612AAA21	
93	3018921300	LOUVER F A	1	ABS	
94	3011834500	FAN	1	ABS OD3.17XD130	
95	3011200510	CLAMP FAN	1	SUS 304	
96	7122401611	SCREW TAPPING	3	T2S TRS 4X16 MFZN	
97	3010968600	CAP F LOUVER B	2	HIPS	
98	3018921500	LOUVER F B AS	1	HIPS	
99	3011443200	COVER F RETURN	1	HIPS	
100	7122401611	SCREW TAPPING	1	T2S TRS 4X16 MFZN	
101	3010924600	CAP F LOUVER	2	HIPS	
102	3012013200	FIXTURE C	2	PP	
103	3012205600	FRAME ICE MAKER	1	HIPS	
104	3000025920	ASSY ICE MAKER	1	FRU-541D(R600A)	
105	3012517800	GUIDE G/MOTR BRKT *L	1	ABS	
106	3012517900	GUIDE G/MOTR BRKT *R	1	ABS	
107	3010658100	BRACKET G/MOTR AS	1	FRS-541D	
108	3012520510	GUIDE ICE CRUSHER *L	1	ABS	
109	3012517710	GUIDE ICE CRUSHER *R	1	ABS	
110	3011115200	CASE ICE CRUSHER AS	1	FRU-541D	
111	3001401700	COVER F FAN AS	1	FRU-571I	
112	3014531900	PLATE F LAMP	1	SGCC T0.8	

NO	PART CODE	PART NAME	Q'ty	SPECIFICATION	REMARK
113	3017906600	SOCKET F LAMP AS	1	250V 1A	
114	3013602500	LAMP	1	240V 25W	
115	7112401211	SCREW TAPPING	1	T1 TRS 4X12 MFZN	
116	3015510700	WINDOW F LAMP	1	MIPS	
117	3016002720	SPECIAL CAP SCREW	2	SM18C	
118	3014807000	SENSOR F AS	1	PT-38	
119	3011442600	COVER F SENS	1	ABS	
120	3018128500	SWITCH LAMP *L	1	SPF101B-2D	
121	3017842600	SHELF F AS	3	FRAME+PRINTED GLASS+FIX	
122	3011114800	CASE F A AS	1	CASE+SILK+FRAME	
123	3011114900	CASE F B AS	1	CASE+SILK+FRAME	
124	3019026700	POCKET F *T	1	HIPS+SILK	
125	3019027400	POCKET F AS	3	BASE+DECO+SILK	
126	3000060410	ASSY F DR	1	FRU-541D	
126-1	3010964600	CAP ICE PATH FRAME	1	HIPS	
126-2	3012318800	GASKET F DR AS	1	PVC	
126-3	3000003700	ASSY F DR URT	1	FRU-541D	
127	3012641500	HANDLE AS	1	FRU-571I	
128	3016002700	SPECIAL SCREW	2	WASR+TRS5X16 MFZN	
129	3010339500	BASE HANDLE *T	1	HIPS	
130	3010339600	BASE HANDLE *U	1	HIPS	
131	7112401211	SCREW TAPPING	8	T1 TRS 4*12 MFZN	
132	3011446400	COVER HNDL DECO *T	1	ABS+SPRAY	
133	3011446500	COVER HNDL DECO *U	1	ABS+SPRAY	
134	3017903702	SOCKET DISP LAMP AS	1	250V 1A 14BASE	
135	3013600020	LAMP	1	240V/15W(E14,CC5A)	
136	3010544000	BOX DISPNS ICE SHUT AS	1	FRU-541D	
137	3011494700	COVER DISPNS BOX AS	1	FRU-541D	
137-1	7173300811	SCREW TAPPITE	7	TT2 BIN 3X8 MFZN	
137-2	30143D5160	PCB FRONT AS	1	FRU-541D	
137-3	3016304800	BUTTON CONTROL B	2	ABS+AL	
137-4	3016304700	BUTTON CONTROL A	1	ABS+AL	
137-5	3015510900	WINDOW F PCB	1	PMMA	
137-6	3011446300	COVER DISPNS BOX	1	ABS+SPRAY	
137-7	3011636900	DECO DISPNS COVR	1	ABS+AL	
137-8	3014235100	PANEL F PCB	1	ABS+SPRAY	
138	3015102200	SPRING ICE D/LEVER	1	SUS	
139	3011495300	COVER ICE FLAP AS	1	FRU-541D	
140	3012019700	FIXTURE ICE SHUT LVR	1	SUS	

NO	PART CODE	PART NAME	Q'ty	SPECIFICATION	REMARK
141	3015402000	VALVE SOL DISP	1	CUBE SN8	
142	3018125800	SWITCH MICRO	1	VP333A-2D	
143	3012213200	FRAME DISPNS BUTTON	1	ABS	
144	3016304600	BUTTON DISPNS	1	SILICON	
145	3012406900	GRILL DISPENSER	1	ABS	
146	3019027500	POCKET DAIRY AS	1	POCKET+COVER	
147	3019027200	POCKET R *M AS	2	BASE+DECO+SILK	
148	3019027300	POCKET R *S AS	2	BASE+DECO+SILK	
149	3000060500	ASSY R DR	1	FRU-571I	
149-1	3012318900	GASKET R DR AS	1	PVC	
149-2	3000058000	ASSY R DR URT	1	FRU-571I	

12-3. FRS(N)-U20EA

CABINET

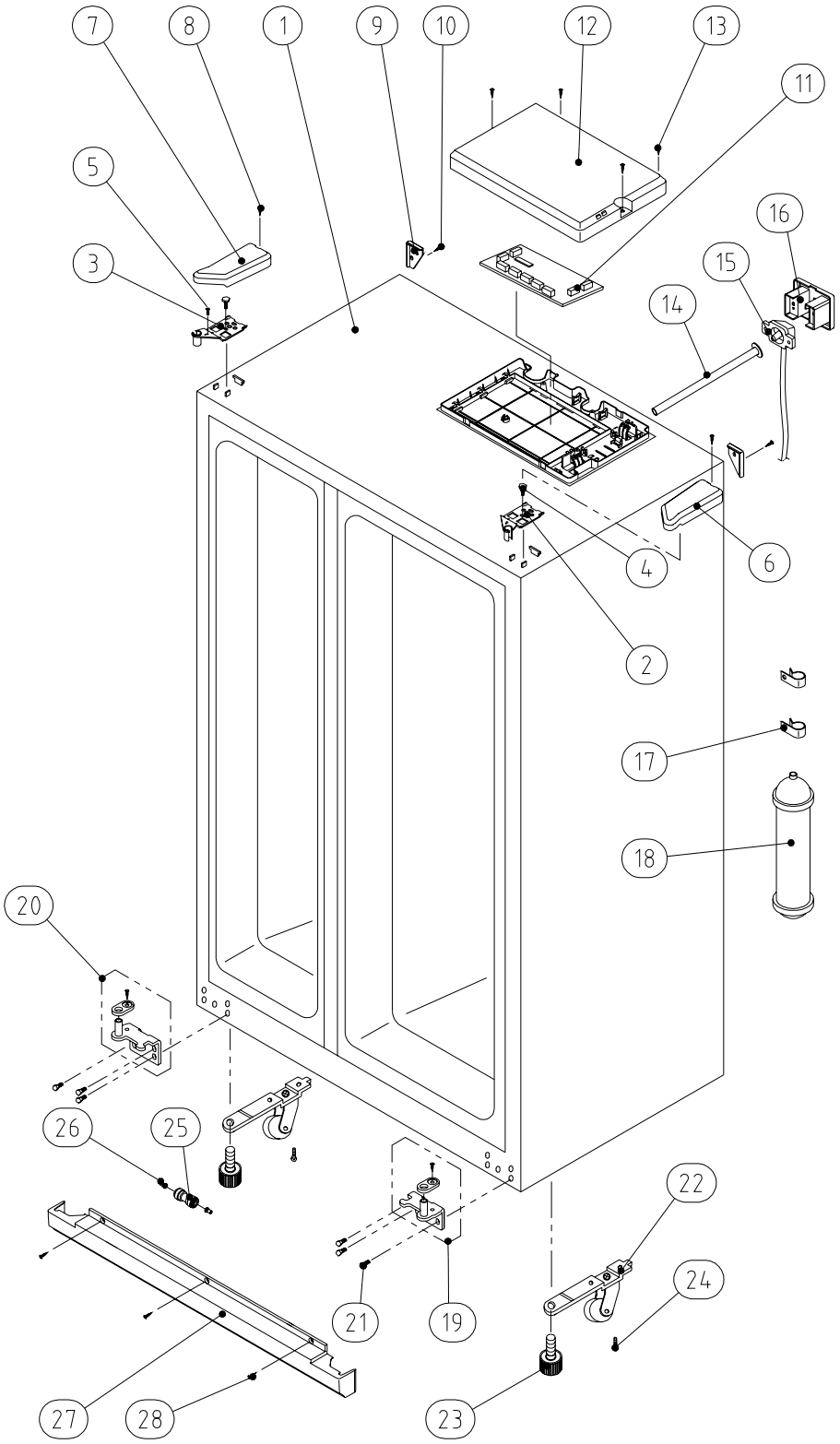

MECH ROOM

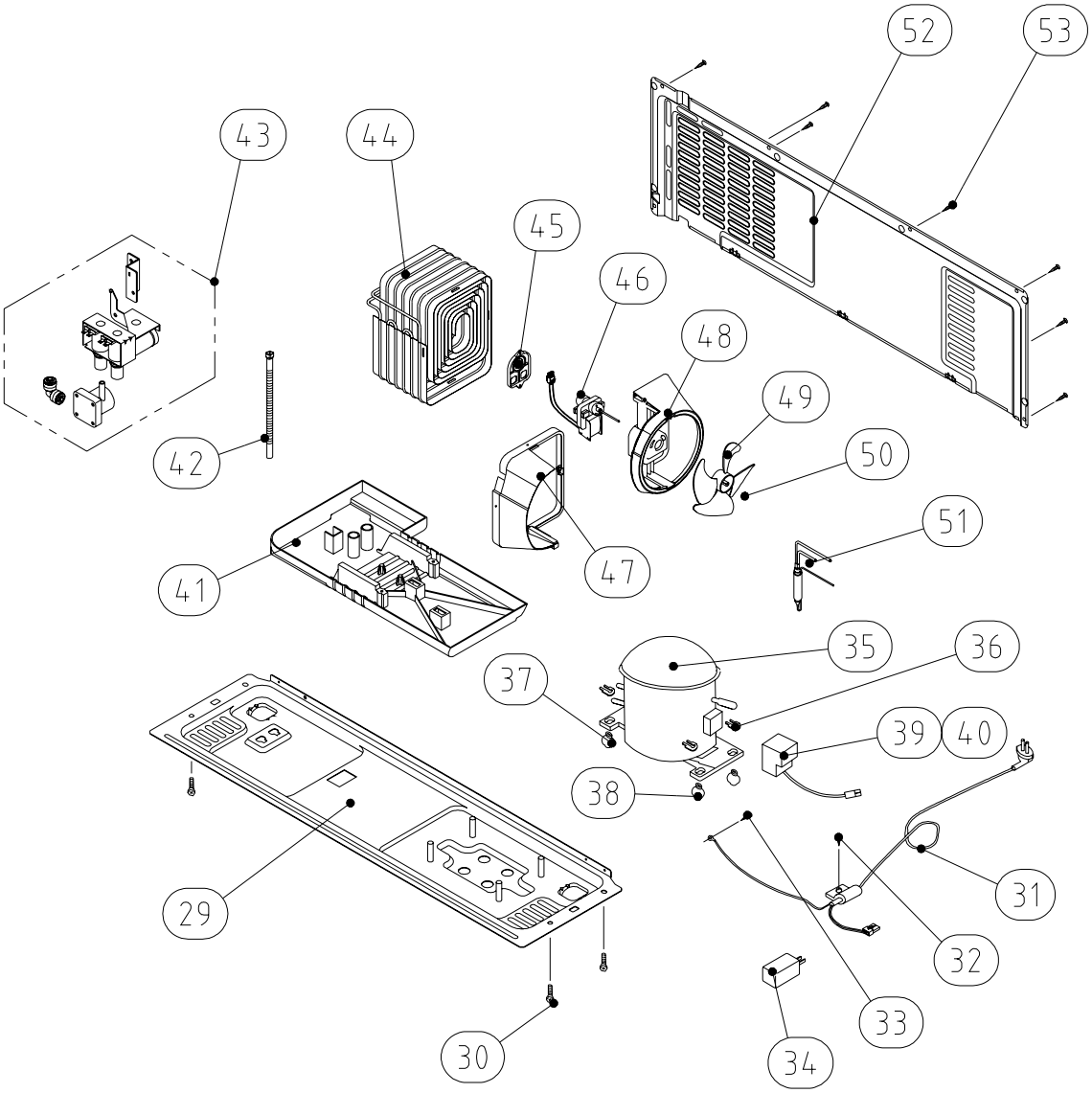
52
53
43
44
45
46
48
49
50
42
51
41
47
35
36
37
39
40
38
31
32
33
34
29
30

R ROOM

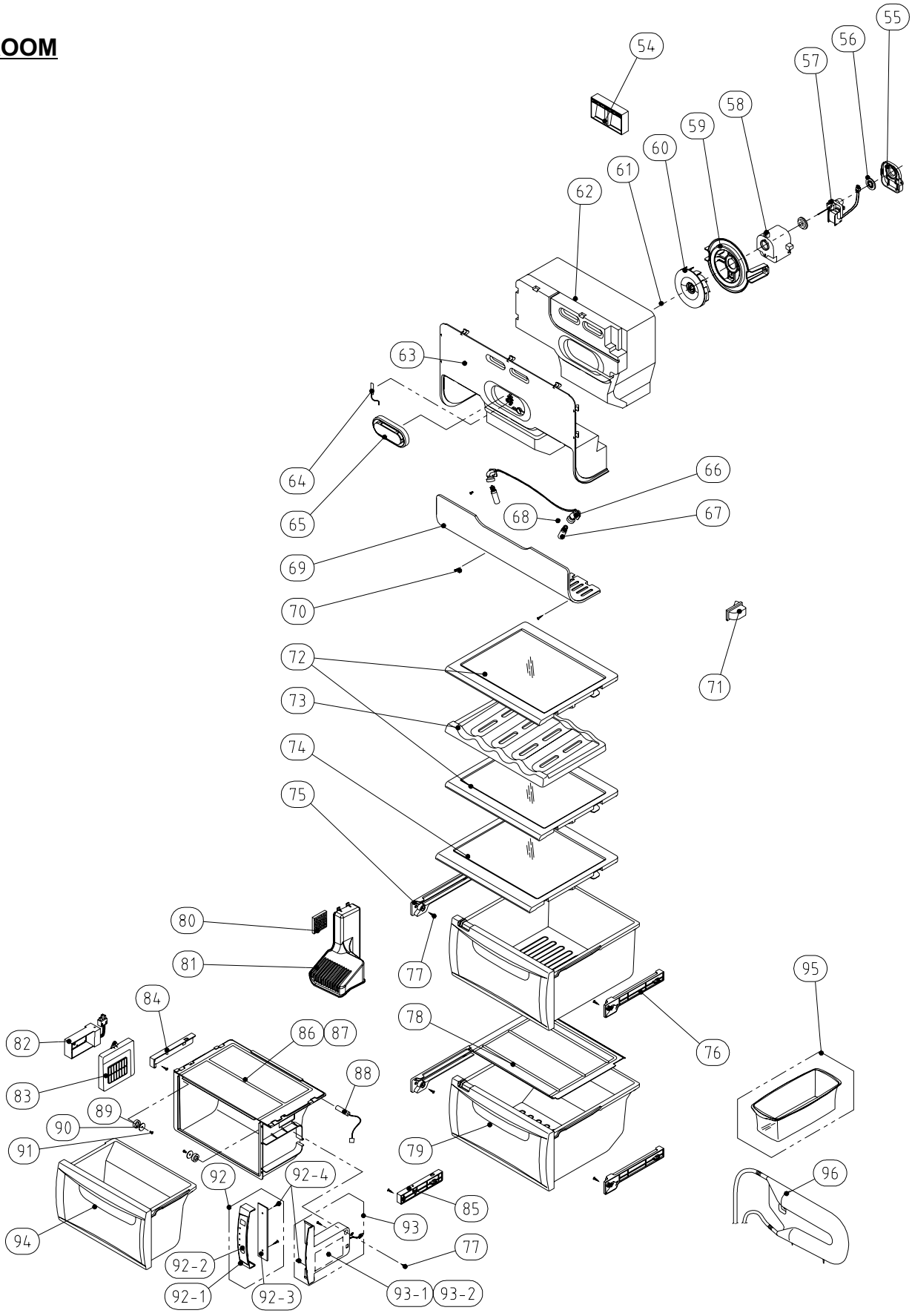
54
55
56
57
58
59
60
61
62
63
64
65
66
67
68
69
70
71
72
73
74
75
76
77
78
79
80
81
82
83
84
85
86
87
88
89
90
91
92
92-1
92-2
92-3
92-4
93
93-1
93-2
94
95
96

F ROOM

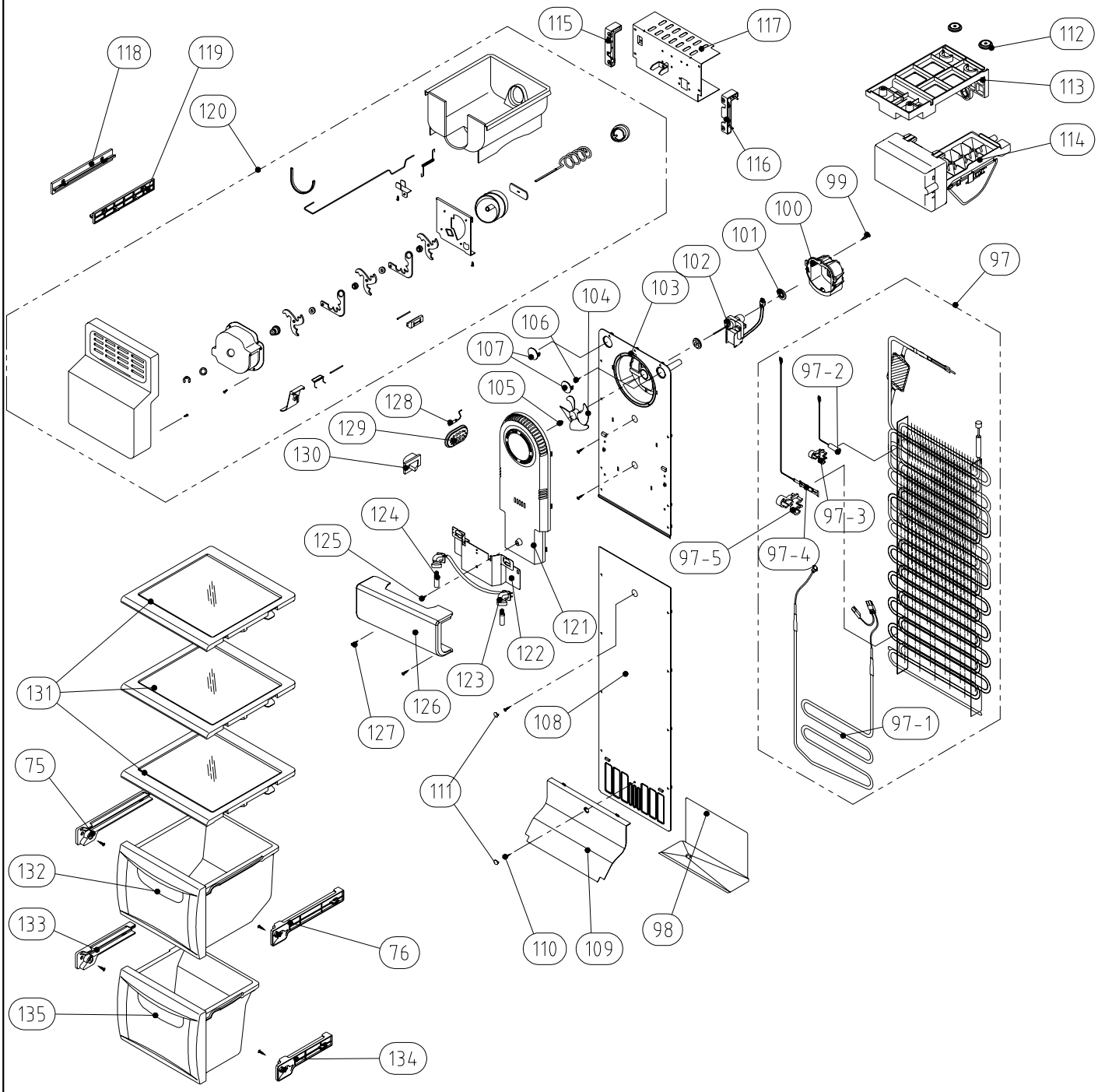
115
117
112
118
119
113
120
116
114
99
100
101
97
102
103
104
106
107
105
97-2
128
129
130
97-3
124
125
97-5
97-4
121
122
123
126
127
108
97-1
131
75
111
132
133
76
110
109
98
135
134

F DOOR

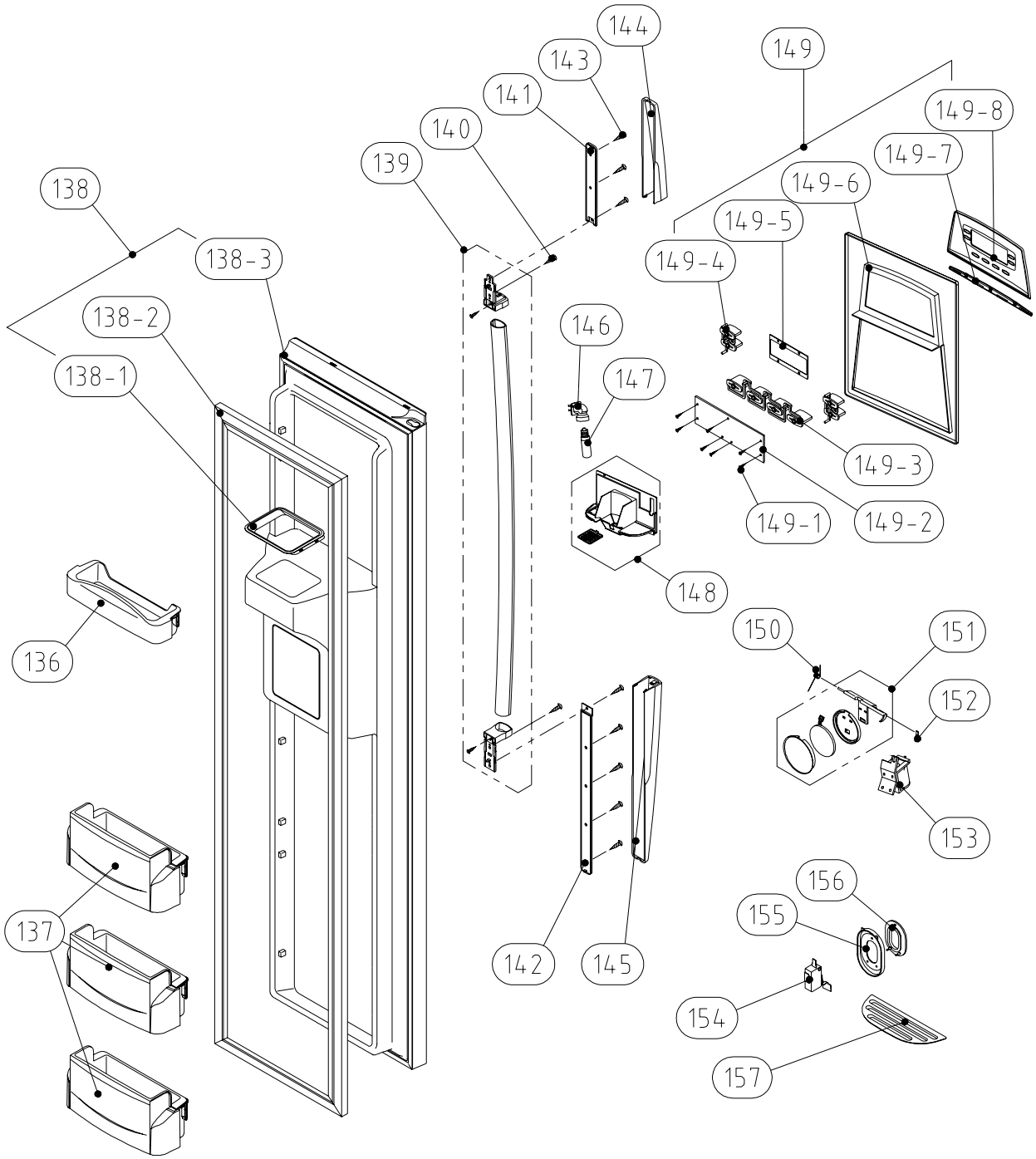
144
143
141
140
139
138
138-3
138-2
138-1
136
137
146
147
148
142
145
149
149-8
149-7
149-6
149-5
149-4
149-3
149-1
149-2
150
151
152
153
156
155
154
157

R DOOR

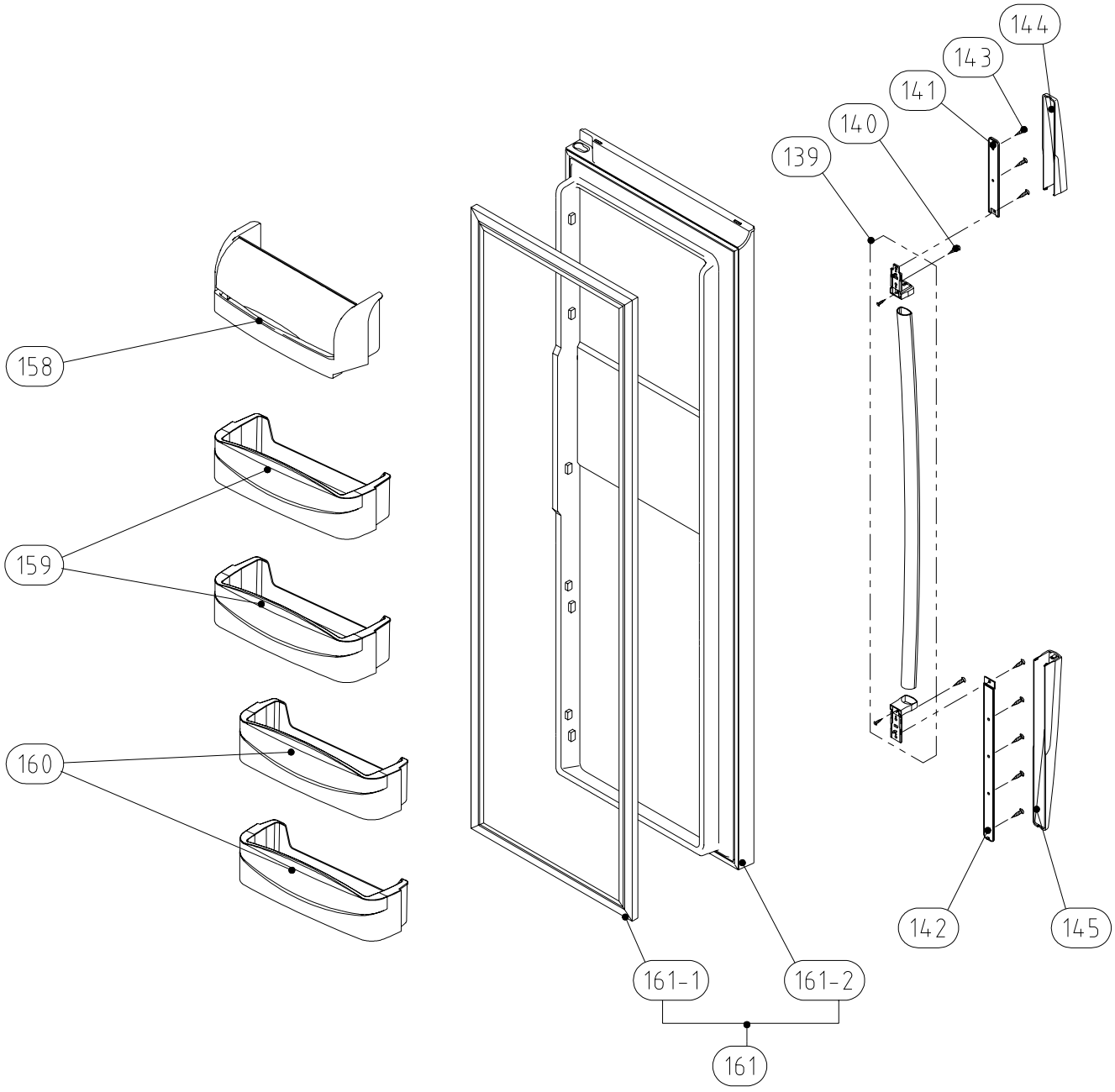

NO	PART CODE	PART NAME	Q'ty	SPECIFICATION	REMARK
1	3000057710	ASSY CAB URT	1	FRU-541D	
2	3012924400	HINGE *T *R AS	1	PO T3.0+PAINT	
3	3012924300	HINGE *T *L AS	1	PO T3.0+PAINT	
4	3016042300	SPECIAL *T HI BOLT	2	6X13 SWCH18A	
5	7051401065	SCREW MACHINE	1	PAN 4X10 SW BSNI	
6	3011446200	COVER *T HI *R	1	PP	
7	3011446100	COVER *T HI *L	1	PP	
8	7112401211	SCREW TAPPING	2	T1 TRS 4X12 MFZN	
9	3010968400	CAP CAB COVER	2	PP	
10	7112401211	SCREW TAPPING	2	T1 TRS 4X12 MFZN	
11	30143D5060	PCB MAIN AS	1	FRU-541D	
12	3011446000	COVER MAIN PCB BOX	1	PP(V-235)	
13	7112401211	SCREW TAPPING	4	T1 TRS 4X12 MFZN	
14	3013224800	HOSE ICE MAKER TUBE AS	1	FRU-541D	
15	3012530200	GUIDE CAB W/TUBE A AS	1	FRU-541D	
16	3011444100	COVER GUIDE CAB W/T A	1	HIPS	
17	3011202000	CLAMP WATER TUBE A	2	PA-66, 5N	
18	3019974800	S/PAER FILTER WATER AS	1	FR-S660CW	
19	3012924000	HINGE *U *R AS	1	P/O T5.0 + PAINT	
20	3012923900	HINGE *U *L AS	1	P/O T5.0 + PAINT	
21	3016001240	SPECIAL BOLT *T	6	6X22 SWCH22A(YL)	
22	3010657200	BRACKET ADJ FOOT	2	SPCC T3.0	
23	3012105100	FOOT ADJ AS	2	PP	
24	3016001240	SPECIAL BOLT *T	2	6X22 SWCH22A(YL)	
25	3013064200	HOLDER TUBE A	1	ACETAL	
26	3012019500	FIXTURE TUBE FIT B	2	PP	
27	3011447200	COVER CAB BRKT	1	PP	
28	7142401511	SCREW TAPPING	3	T2 TRS 4X16 MFZN	
29	3010340400	BASE COMP AS	1	FRU-571I	
30	3016003300	SPEICAL BOLT	4	T2 M6.5X20	
31	3011346700	CORD POWER AS	1	FRU-571I	
32	7112401211	SCREW TAPPING	1	T1 TRS 4X12 MFZN	
33	7051401065	SCREW MACHINE	1	PAN 4X10 SW BSNI	
34	3016401920	CAPACITOR RUN	1	400VAC 5UF	
35	3956145250	COMP	1	MK4A5Q-R1U (R-600a)	
36	3016002500	SPECIAL WASHER	4	SK-5, T0.8	
37	3010101600	RUBBER ABSORBER COMP	2	NBR	
38	3010101480	ABSORBER COMP AS	2	FRU-541D	
39	3018129600	SWITCH P RELAY AS	1	265RHB,330	

NO	PART CODE	PART NAME	Q'ty	SPECIFICATION	REMARK
40	3811402200	COVER RELAY	1	MK4A5Q-R1U S/S (R600A)	
41	3011181300	CASE VAPORI AS	1	PP	
42	3013201710	HOSE DRN B	1	PE FRB-5970NB	
43	3015402300	VALVE WATER AS	1	FR-S660CW	
44	3014461510	PIPE WICON AS	1	TSW OD4.76XT0.7	
45	3012021700	FIXTURE MOTR	1	PP	
46	3015916100	MOTOR C FAN AS	1	DC-2213DWCA-3	
47	3018500300	M/BELL B	1	PP	
48	3018500200	M/BELL A	1	PP	
49	3011834700	FAN	1	ABS OD3.17XD150	
50	3011200500	CLAMP FAN	1	SUS 304	
51	3016808100	DRYER AS	1	C1220T-M OD19.05XL135	
52	3011497000	COVER MACH ROOM AS	1	SBHG T0.35	
53	7112401211	SCREW TAPPING	7	T1 TRS 4X12 MFZN	
54	3012214100	FRAME CHECK VALVE AS	1	FRU-571I	
55	3012023700	FIXTURE MOTOR S3	1	PP(NATURAL)	
56	3010107100	ABSORBER MOTOR	2	NBR	
57	3015916000	MOTOR R FAN AS	1	D4612AAA20	
58	3012023900	FIXTURE MOTOR S2	1	PP(NATURAL)	
59	3012023800	FIXTURE MOTOR S1	1	PP(NATURAL)	
60	3011835400	FAN R	1	ABS OD3.17XD110	
61	3011200510	CLAMP FAN	1	SUS 304	
62	3013357300	INSU DAMP AS	1	F-PS	
63	3011445200	COVER DAMP	1	HIPS	
64	3014807100	SENSOR R AS	1	PBN-43B	
65	3011445700	COVER R SENSOR	1	ABS+SPRAY	
66	3017906500	SOCKET R LAMP AS	1	250V/1A	
67	3013602500	LAMP	2	AC 240V 25W(S)	
68	7121300811	SCREW TAPPING	2	T2S PAN 3X8	
69	3015510800	WINDOW R LAMP	1	MIPS	
70	3016002720	SPECIAL CAP SCREW	2	SM18C	
71	3018128600	SWITCH LAMP *R	1	SPF101B-1D	
72	3017842800	SHELF R A AS	2	FRAME+PRINTED GLASS+FIX	
73	3017842500	SHELF WINE	1	GPPS	
74	3017842900	SHELF R B AS	1	FRAME+PRINTED GLASS+FIX	
75	3012514500	GUIDE CASE A *L AS	3	ABS	
76	3012514600	GUDIE CASE A *R AS	3	ABS	
77	7122401611	SCREW TAPPING	10	T2S TRS 4X16 MFZN	
78	3011446600	COVER VEGETB A	1	GPPS	

NO	PART CODE	PART NAME	Q'ty	SPECIFICATION	REMARK
79	3011114600	CASE VEGETB B AS	1	CASE+SILK+FRAME+KNOB	
80	3018701800	DEO ANTI AS	1	W40XT5XL40	
81	3011445900	COVER RETURN DUCT	1	PP	
82	3016767100	DAMPER AS	1	DU24-012	
83	3011450900	COVER DUCT CH RM AS	1	PP+SEAL	
84	3012529500	GUDIE CHANGE RM *L	1	ABS	
85	3012529600	GUDIE CHANGE RM *R	1	ABS	
86	3011446800	COVER CHANGE RM	1	GPPS	
87	3010548200	BOX CHANGE RM	1	HIPS	
88	3014806800	SENSOR M AS	1	PBN-43B	
89	3014700301	ROLLER A	2	PP(NATURAL)	
90	3016003700	SPECIAL WASHER	2	T1.0 OD20	
91	3016040000	SPECIAL SCREW D	2	4X8	
92	3001402500	COVER CONTL CH RM AS	1	COVER+FRONT PCB	
92-1	3011447500	COVER CONTL CH RM	1	HIPS	
92-2	3014533600	PLATE CONTL CH RM	1	PC T0.3	
92-3	30143D5360	PCB SUB FRONT AS	1		
92-4	7173300811	SCREW TAPPITE	4	TT2 BIN 3X8 MFZN	
93	3011115100	CASE CONTL CH RM AS	1	CASE+MAIN PCB	
93-1	3011186200	CASE CONTL CH RM	1	HIPS	
93-2	30143D5260	PCB SUB MAIN AS	1	FRU-541G	
94	3011115000	CASE CHANGE RM AS	1		
95	3011171310	CASE EGG AS	1	CASE+VINYL	
96	3018201000	TANK WATER AS	1	FRU-541D	
97	3017053500	EVA AS	1	FRU-571I	
97-1	3012818300	HEATER SHEATH AS	1	AC220V/ 192W	
97-2	3014806900	SENSOR D AS	1	PBN-43	
97-3	3012023600	FIXTURE D SENS	1	PP	
97-4	301720200	FUSE TEMP AS	1	AC250V 10A 77C	
97-5	4017Z90590	FIXTURE FUSE TEMP	1	PP	
98	3012529000	GUIDE DRN	1	GA	
99	7122401211	SCREW TAPPING	1	T2S TRS 4X12 MFZN	
100	3012007800	FIXTURE MOTOR A	1	HIPS	
101	3010107100	ABSORBER MOTOR	2	NBR	
102	3015915900	MOTOR F FAN	1	D4612AAA21	
103	3018921300	LOUVER F A	1	ABS	
104	3011834500	FAN	1	ABS OD3.17XD130	
105	3011200510	CLAMP FAN	1	SUS 304	
106	7122401611	SCREW TAPPING	3	T2S TRS 4X16 MFZN	

NO	PART CODE	PART NAME	Q'ty	SPECIFICATION	REMARK
107	3010968600	CAP F LOUVER B	2	HIPS	
108	3018921500	LOUVER F B AS	1	HIPS	
109	3011443200	COVER F RETURN	1	HIPS	
110	7122401611	SCREW TAPPING	1	T2S TRS 4X16 MFZN	
111	3010924600	CAP F LOUVER	2	HIPS	
112	3012013200	FIXTURE C	2	PP	
113	3012205600	FRAME ICE MAKER	1	HIPS	
114	3000025920	ASSY ICE MAKER	1	FRU-541D(R600A)	
115	3012517800	GUIDE G/MOTR BRKT *L	1	ABS	
116	3012517900	GUIDE G/MOTR BRKT *R	1	ABS	
117	3010658100	BRACKET G/MOTR AS	1	FRS-541D	
118	3012520510	GUIDE ICE CRUSHER *L	1	ABS	
119	3012517710	GUIDE ICE CRUSHER *R	1	ABS	
120	3011115200	CASE ICE CRUSHER AS	1	FRU-541D	
121	3001401700	COVER F FAN AS	1	FRU-571I	
122	3014531900	PLATE F LAMP	1	SGCC T0.8	
123	3017906600	SOCKET F LAMP AS	1	250V 1A	
124	3013602500	LAMP	1	240V 25W	
125	7112401211	SCREW TAPPING	1	T1 TRS 4X12 MFZN	
126	3015510700	WINDOW F LAMP	1	MIPS	
127	3016002720	SPECIAL CAP SCREW	2	SM18C	
128	3014807000	SENSOR F AS	1	PT-38	
129	3011442600	COVER F SENS	1	ABS	
130	3018128500	SWITCH LAMP *L	1	SPF101B-2D	
131	3017842600	SHELF F AS	3	FRAME+PRINTED GLASS+FIX	
132	3011114800	CASE F A AS	1	CASE+SILK+FRAME	
133	3012529700	GUIDE CASE C *L AS	1	ABS	
134	3012529800	GUIDE CASE C *R AS	1	ABS	
135	3011114900	CASE F B AS	1	CASE+SILK+FRAME	
136	3019026700	POCKET F *T	1	HIPS+SILK	
137	3019027400	POCKET F AS	3	BASE+DECO+SILK	
138	3000060410	ASSY F DR	1	FRU-541D	
138-1	3010964600	CAP ICE PATH FRAME	1	HIPS	
138-2	3012318800	GASKET F DR AS	1	PVC	
138-3	3000003700	ASSY F DR URT	1	FRU-541D	
139	3012641500	HANDLE AS	1	FRU-571I	
140	3016002700	SPECIAL SCREW	2	WASR+TRS5X16 MFZN	
141	3010339500	BASE HANDLE *T	1	HIPS	
142	3010339600	BASE HANDLE *U	1	HIPS	

NO	PART CODE	PART NAME	Q'ty	SPECIFICATION	REMARK
143	7112401211	SCREW TAPPING	8	T1 TRS 4*12 MFZN	
144	3011446400	COVER HNDL DECO *T	1	ABS+SPRAY	
145	3011446500	COVER HNDL DECO *U	1	ABS+SPRAY	
146	3017903702	SOCKET DISP LAMP AS	1	250V 1A 14BASE	
147	3013600020	LAMP	1	240V/15W(E14,CC5A)	
148	3010544000	BOX DISPNS ICE SHUT AS	1	FRU-541D	
149	3011494700	COVER DISPNS BOX AS	1	FRU-541D	
149-1	7173300811	SCREW TAPPITE	7	TT2 BIN 3X8 MFZN	
149-2	30143D5160	PCB FRONT AS	1	FRU-541D	
149-3	3016304700	BUTTON CONTROL A	1	ABS+AL	
149-4	3016304800	BUTTON CONTROL B	2	ABS+AL	
149-5	3015510900	WINDOW F PCB	1	PMMA	
149-6	3011446300	COVER DISPNS BOX	1	ABS+SPRAY	
149-7	3011636900	DECO DISPNS COVR	1	ABS+AL	
149-8	3014235100	PANEL F PCB	1	ABS+SPRAY	
150	3015102200	SPRING ICE D/LEVER	1	SUS	
151	3011495300	COVER ICE FLAP AS	1	FRU-541D	
152	3012019700	FIXTURE ICE SHUT LVR	1	SUS	
153	3015402000	VALVE SOL DISP	1	CUBE SN8	
154	3018125800	SWITCH MICRO	1	VP333A-2D	
155	3012213200	FRAME DISPNS BUTTON	1	ABS	
156	3016304600	BUTTON DISPNS	1	SILICON	
157	3012406900	GRILL DISPENSER	1	ABS	
158	3019027500	POCKET DAIRY AS	1	POCKET+COVER	
159	3019027200	POCKET R *M AS	2	BASE+DECO+SILK	
160	3019027300	POCKET R *S AS	2	BASE+DECO+SILK	
161	3000060500	ASSY R DR	1	FRU-571I	
161-1	3012318900	GASKET R DR AS	1	PVC	
161-2	3000058000	ASSY R DR URT	1	FRU-571I	

12-4. FRS(N)-U20FA

CABINET

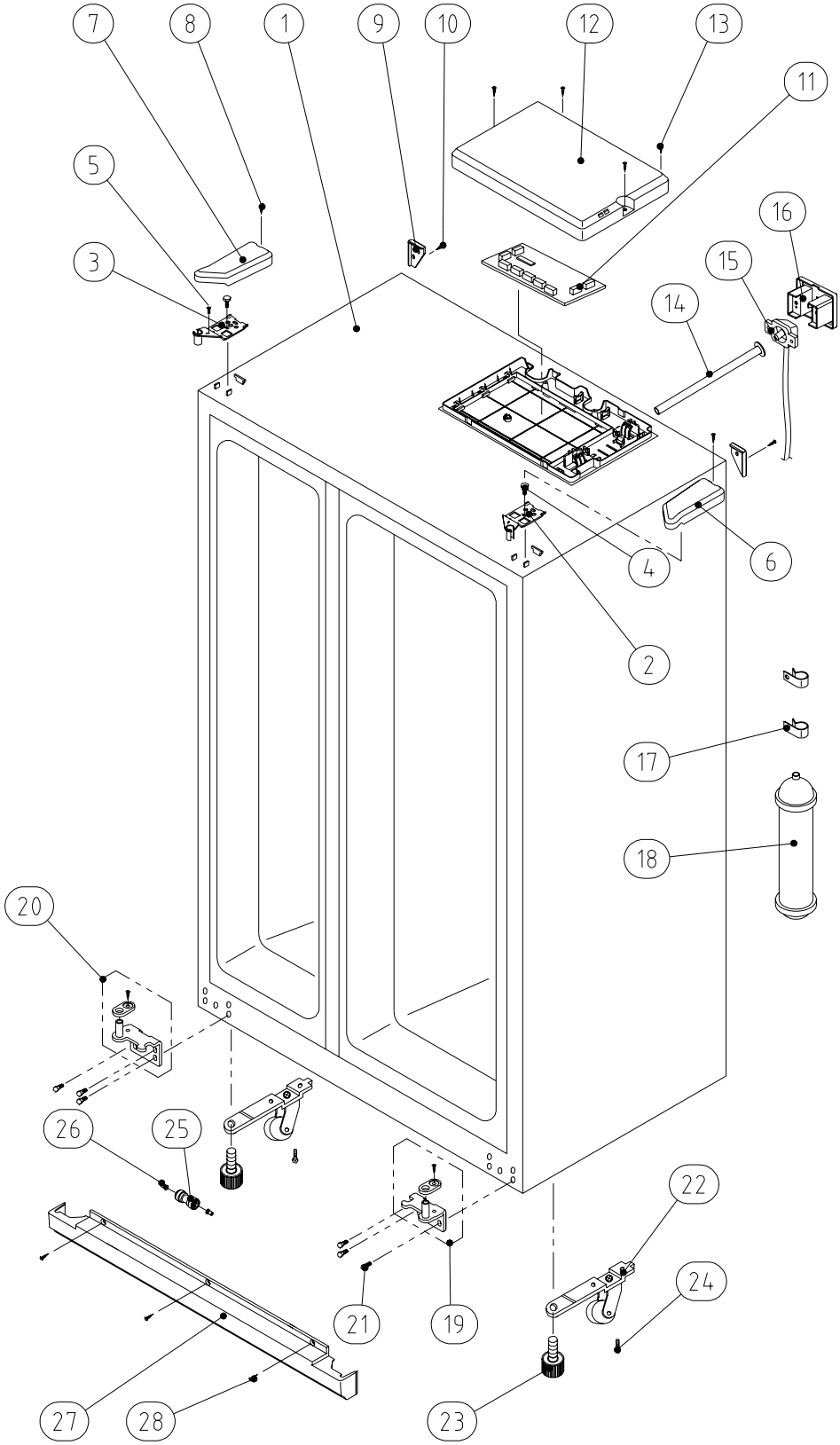

MECH ROOM

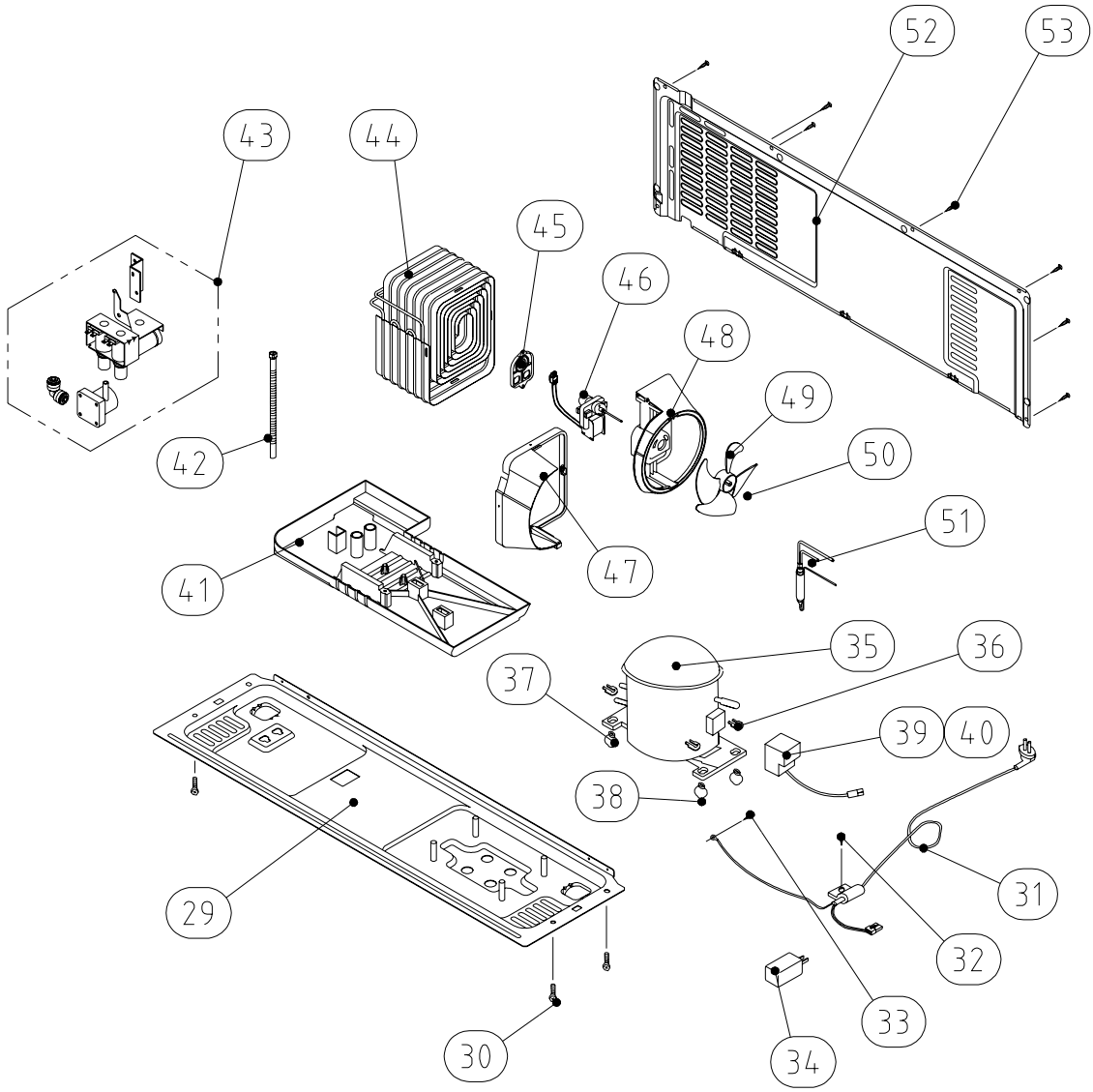
52
53
43
44
45
46
48
49
50
51
42
41
47
35
36
37
39
40
38
31
32
33
34
29
30

R ROOM

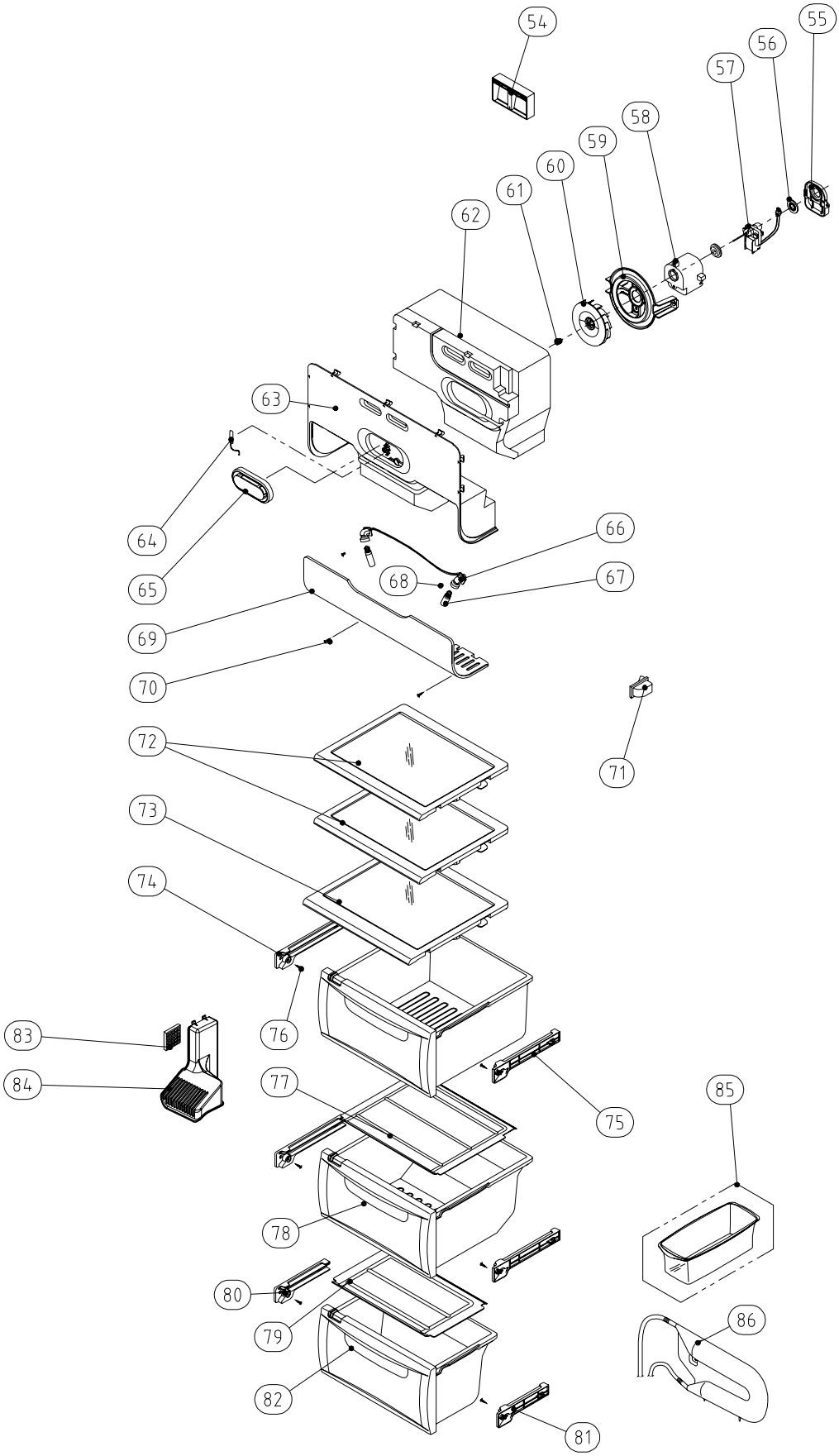
54
55
56
57
58
59
60
61
62
63
64
65
66
67
68
69
70
71
72
73
74
75
76
77
78
79
80
81
82
83
84
85
86

F ROOM

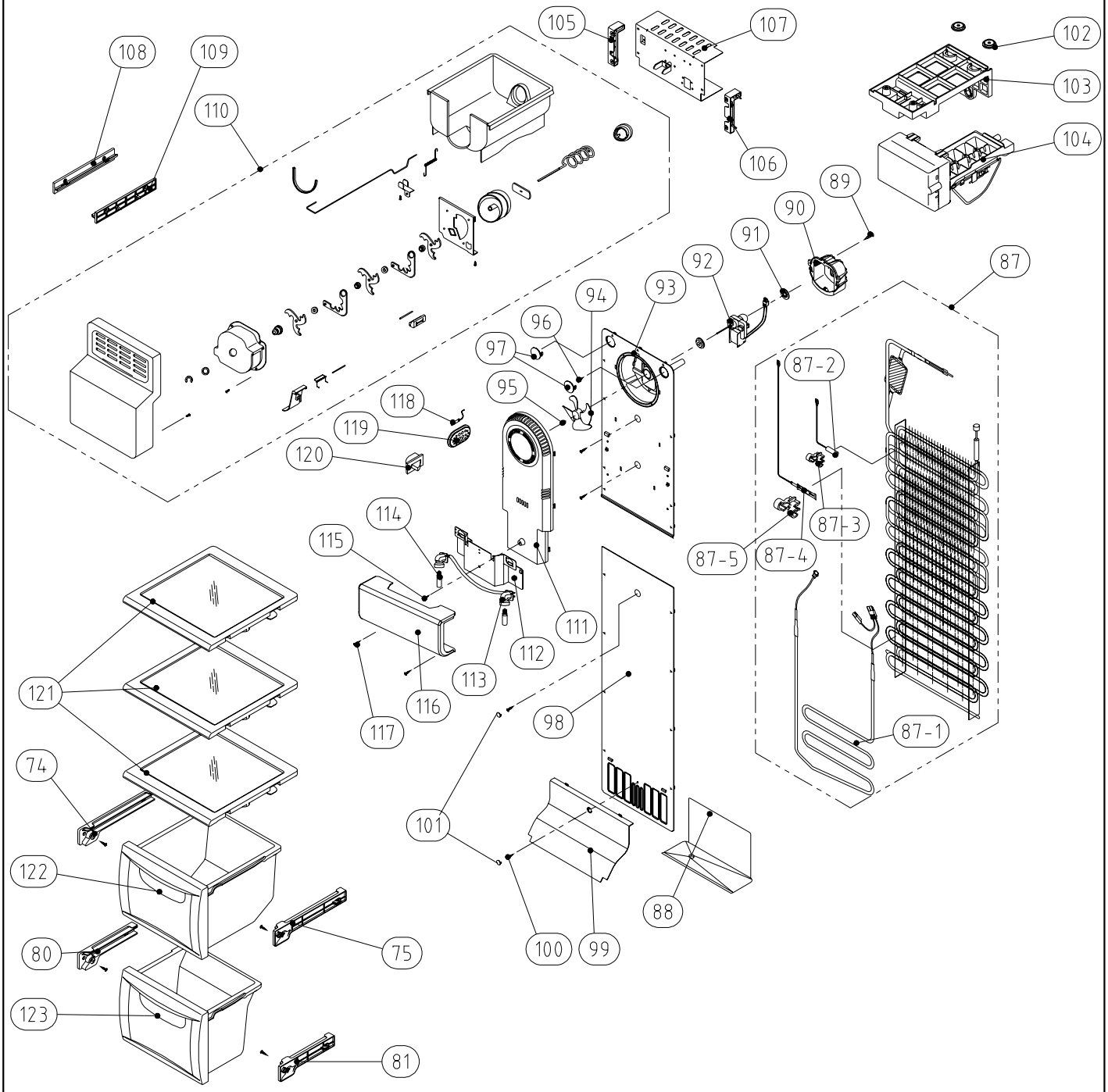
105
107
102
108
109
103
110
106
104
89
90
91
92
87
94
93
96
97
95
87-2
118
119
120
114
115
87-3
87-5
87-4
111
112
113
116
117
98
87-1
121
74
101
122
88
100
99
80
75
123
81

F DOOR

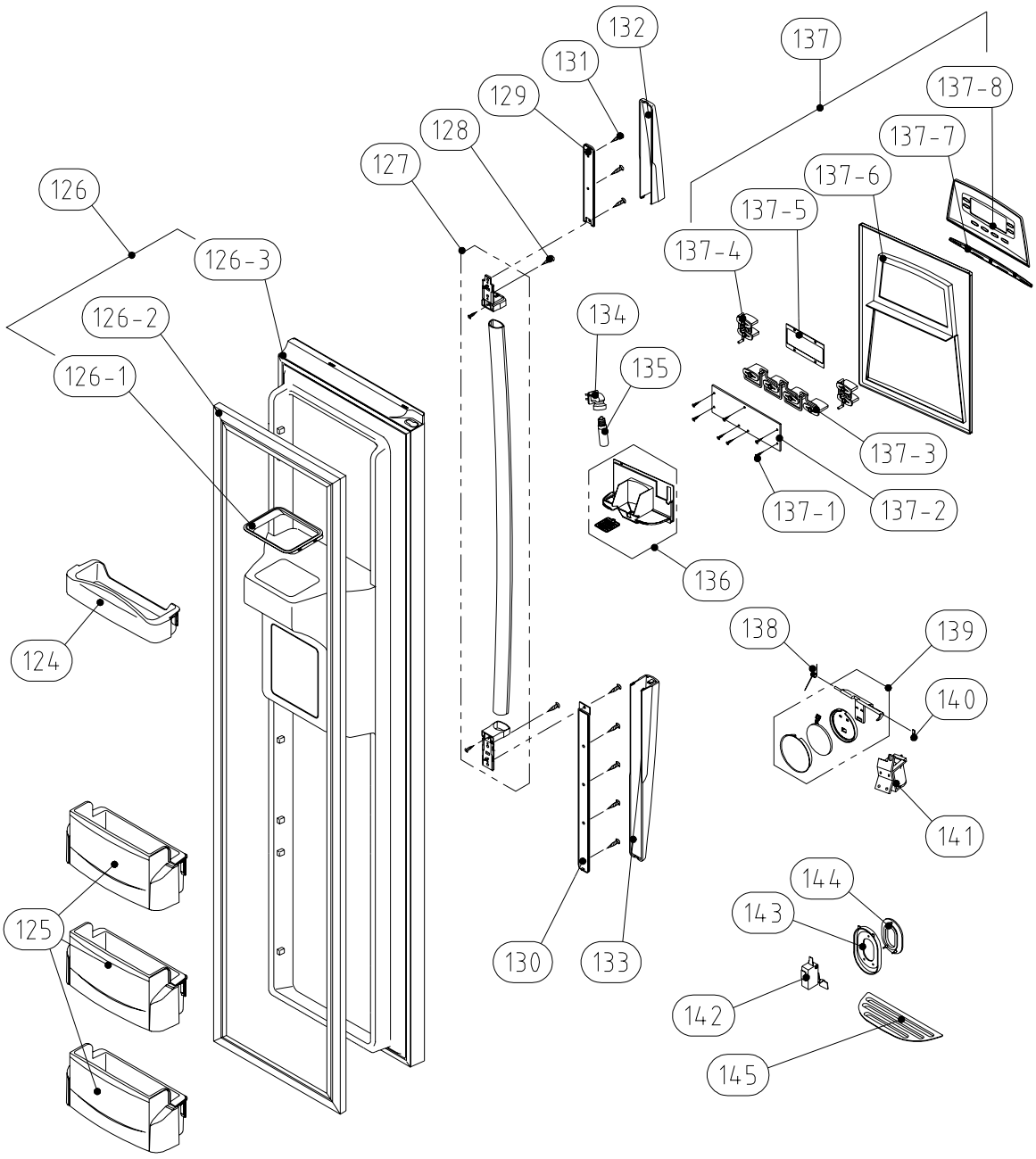
132
131
129
128
127
126
126-3
126-2
126-1
124
125
137
137-8
137-7
137-6
137-5
137-4
134
135
137-3
137-1
137-2
136
138
139
140
141
144
143
142
145
130
133

R DOOR

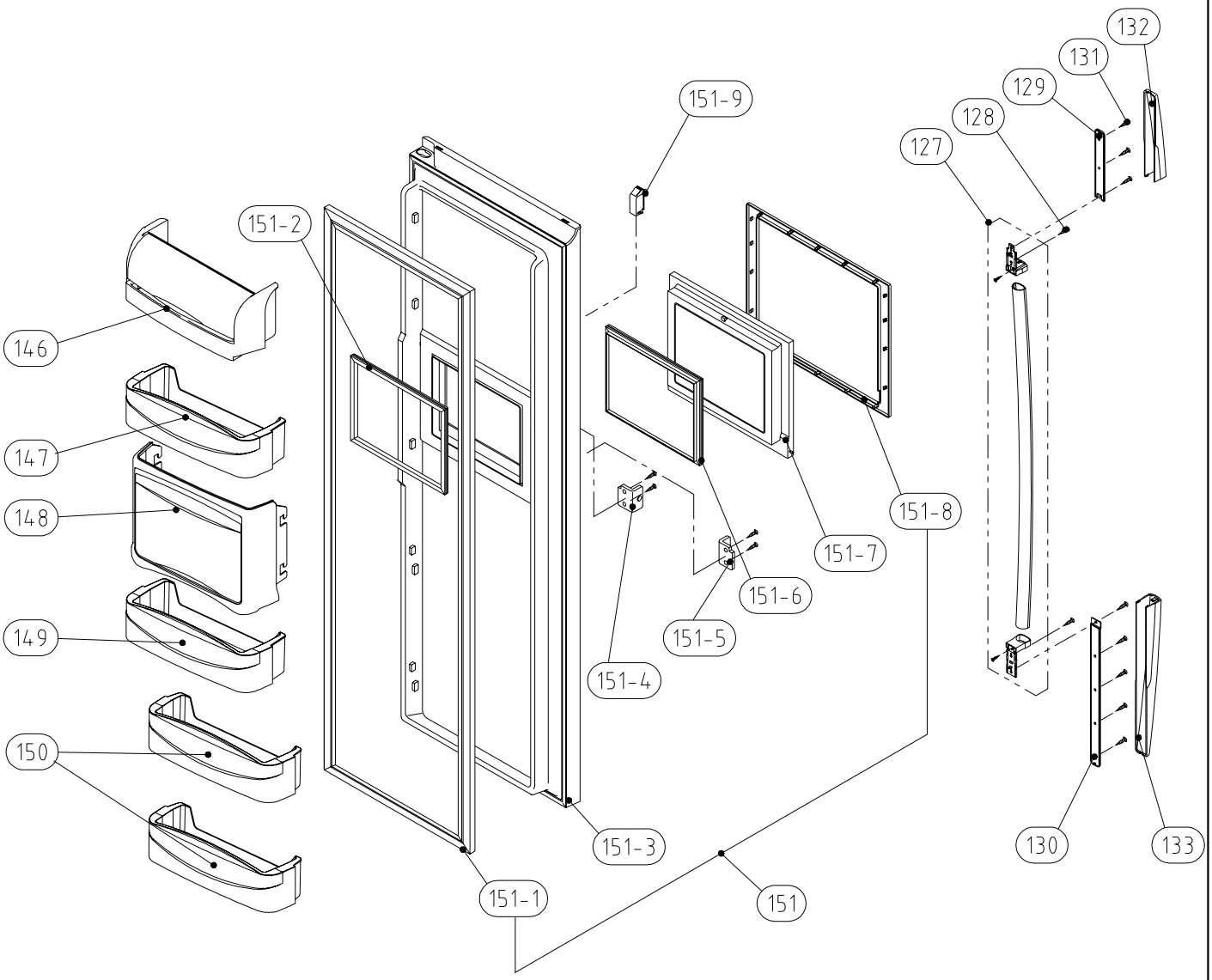
132
131
129
128
127
151-9
151-2
146
147
148
149
150
151-8
151-7
151-6
151-5
151-4
151-3
151-1
151
130
133

NO	PART CODE	PART NAME	Q'ty	SPECIFICATION	REMARK
1	3000057710	ASSY CAB URT	1	FRU-541D	
2	3012924400	HINGE *T *R AS	1	PO T3.0+PAINT	
3	3012924300	HINGE *T *L AS	1	PO T3.0+PAINT	
4	3016042300	SPECIAL *T HI BOLT	2	6X13 SWCH18A	
5	7051401065	SCREW MACHINE	1	PAN 4X10 SW BSNI	
6	3011446200	COVER *T HI *R	1	PP	
7	3011446100	COVER *T HI *L	1	PP	
8	7112401211	SCREW TAPPING	2	T1 TRS 4X12 MFZN	
9	3010968400	CAP CAB COVER	2	PP	
10	7112401211	SCREW TAPPING	2	T1 TRS 4X12 MFZN	
11	30143D5060	PCB MAIN AS	1	FRU-541D	
12	3011446000	COVER MAIN PCB BOX	1	PP(V-235)	
13	7112401211	SCREW TAPPING	4	T1 TRS 4X12 MFZN	
14	3013224800	HOSE ICE MAKER TUBE AS	1	FRU-541D	
15	3012530200	GUIDE CAB W/TUBE A AS	1	FRU-541D	
16	3011444100	COVER GUIDE CAB W/T A	1	HIPS	
17	3011202000	CLAMP WATER TUBE A	4	PA-66, 5N	
18	3019974800	S/PAER FILTER WATER AS	1	FR-S660CW	
19	3012924000	HINGE *U *R AS	1	P/O T5.0 + PAINT	
20	3012923900	HINGE *U *L AS	1	P/O T5.0 + PAINT	
21	3016001240	SPECIAL BOLT *T	6	6X22 SWCH22A(YL)	
22	3010657200	BRACKET ADJ FOOT	2	SPCC T3.0	
23	3012105100	FOOT ADJ AS	2	PP	
24	3016001240	SPECIAL BOLT *T	2	6X22 SWCH22A(YL)	
25	3013064200	HOLDER TUBE A	1	ACETAL	
26	3012019500	FIXTURE TUBE FIT B	2	PP	
27	3011447200	COVER CAB BRKT	1	PP	
28	7142401511	SCREW TAPPING	3	T2 TRS 4X16 MFZN	
29	3010340400	BASE COMP AS	1	FRU-571I	
30	3016003300	SPEICAL BOLT	4	T2 M6.5X20	
31	3011346700	CORD POWER AS	1	FRU-571I	
32	7112401211	SCREW TAPPING	1	T1 TRS 4X12 MFZN	
33	7051401065	SCREW MACHINE	1	PAN 4X10 SW BSNI	
34	3016401920	CAPACITOR RUN	1	400VAC 5UF	
35	3956145250	COMP	1	MK4A5Q-R1U	
36	3016002500	SPECIAL WASHER	4	SK-5, T0.8	
37	3010101600	RUBBER ABSORBER COMP	2	NBR	
38	3010101480	ABSORBER COMP AS	2	FRU-541D	
39	3018129600	SWITCH P RELAY AS	1	265RHB,330	

NO	PART CODE	PART NAME	Q'ty	SPECIFICATION	REMARK
40	3811402200	COVER RELAY	1	MK4A5Q-R1U S/S (R600A)	
41	3011181300	CASE VAPORI AS	1	PP	
42	3013201710	HOSE DRN B	1	PE FRB-5970NB	
43	3015402300	VALVE WATER AS	1	FR-S660CW	
44	3014461510	PIPE WICON AS	1	TSW OD4.76XT0.7	
45	3012021700	FIXTURE MOTR	1	PP	
46	3015916100	MOTOR C FAN AS	1	DC-2213DWCA-3	
47	3018500300	M/BELL B	1	PP	
48	3018500200	M/BELL A	1	PP	
49	3011834700	FAN	1	ABS OD3.17XD150	
50	3011200500	CLAMP FAN	1	SUS 304	
51	3016808100	DRYER AS	1	C1220T-M OD19.05XL135	
52	3011497000	COVER MACH ROOM AS	1	SBHG T0.35	
53	7112401211	SCREW TAPPING	7	T1 TRS 4X12 MFZN	
54	3012214100	FRAME CHECK VALVE AS	1	FRU-571I	
55	3012023700	FIXTURE MOTOR S3	1	PP(NATURAL)	
56	3010107100	ABSORBER MOTOR	2	NBR	
57	3015916000	MOTOR R FAN AS	1	D4612AAA20	
58	3012023900	FIXTURE MOTOR S2	1	PP(NATURAL)	
59	3012023800	FIXTURE MOTOR S1	1	PP(NATURAL)	
60	3011835400	FAN R	1	ABS OD3.17XD110	
61	3011200510	CLAMP FAN	1	SUS 304	
62	3013357300	INSU DAMP AS	1	F-PS	
63	3011445200	COVER DAMP	1	HIPS	
64	3014807100	SENSOR R AS	1	PBN-43B	
65	3011445700	COVER R SENSOR	1	ABS+SPRAY	
66	3017906500	SOCKET R LAMP AS	1	250V/1A	
67	3013602500	LAMP	2	AC 240V 25W(S)	
68	7121300811	SCREW TAPPING	2	T2S PAN 3X8	
69	3015510800	WINDOW R LAMP	1	MIPS	
70	3016002720	SPECIAL CAP SCREW	2	SM18C	
71	3018128600	SWITCH LAMP *R	1	SPF101B-1D	
72	3017842800	SHELF R A AS	2	FRAME+PRINTED GLASS+FIX	
73	3017842900	SHELF R B AS	1	FRAME+PRINTED GLASS+FIX	
74	3012514500	GUIDE CASE A *L AS	3	ABS	
75	3012514600	GUDIE CASE A *R AS	3	ABS	
76	7122401611	SCREW TAPPING	10	T2S TRS 4X16 MFZN	
77	3011446600	COVER VEGETB A	1	GPPS	
78	3011114600	CASE VEGETB B AS	1	CASE+SILK+FRAME+KNOB	

NO	PART CODE	PART NAME	Q'ty	SPECIFICATION	REMARK
79	3011446700	COVER VEGETB CASE B	1	GPPS	
80	3012529700	GUIDE CASE C *L AS	2	ABS	
81	3012529800	GUIDE CASE C *R AS	2	ABS	
82	3011114700	CASE VEGETB C AS	1	CASE+SILK+FRAME+KNOB	
83	3018701800	DEO ANTI AS	1	W40XT5XL40	
84	3011445900	COVER RETURN DUCT	1	PP	
85	3011171310	CASE EGG AS	1	CASE+VINYL	
86	3018201000	TANK WATER AS	1	FRU-541D	
87	3017053500	EVA AS	1	FRU-571I	
87-1	3012818300	HEATER SHEATH AS	1	AC220V/ 192W	
87-2	3014806900	SENSOR D AS	1	PBN-43	
87-3	3012023600	FIXTURE D SENS	1	PP	
87-4	301720200	FUSE TEMP AS	1	AC250V 10A 77C	
87-5	4017Z90590	FIXTURE FUSE TEMP	1	PP	
88	3012529000	GUIDE DRN	1	GA	
89	7122401211	SCREW TAPPING	1	T2S TRS 4X12 MFZN	
90	3012007800	FIXTURE MOTOR A	1	HIPS	
91	3010107100	ABSORBER MOTOR	2	NBR	
92	3015915900	MOTOR F FAN	1	D4612AAA21	
93	3018921300	LOUVER F A	1	ABS	
94	3011834500	FAN	1	ABS OD3.17XD130	
95	3011200510	CLAMP FAN	1	SUS 304	
96	7122401611	SCREW TAPPING	3	T2S TRS 4X16 MFZN	
97	3010968600	CAP F LOUVER B	2	HIPS	
98	3018921500	LOUVER F B AS	1	HIPS	
99	3011443200	COVER F RETURN	1	HIPS	
100	7122401611	SCREW TAPPING	1	T2S TRS 4X16 MFZN	
101	3010924600	CAP F LOUVER	2	HIPS	
102	3012013200	FIXTURE C	2	PP	
103	3012205600	FRAME ICE MAKER	1	HIPS	
104	3000025920	ASSY ICE MAKER	1	FRU-541D(R600A)	
105	3012517800	GUIDE G/MOTR BRKT *L	1	ABS	
106	3012517900	GUIDE G/MOTR BRKT *R	1	ABS	
107	3010658100	BRACKET G/MOTR AS	1	FRS-541D	
108	3012520510	GUIDE ICE CRUSHER *L	1	ABS	
109	3012517710	GUIDE ICE CRUSHER *R	1	ABS	
110	3011115200	CASE ICE CRUSHER AS	1	FRU-541D	
111	3001401700	COVER F FAN AS	1	FRU-571I	
112	3014531900	PLATE F LAMP	1	SGCC T0.8	

NO	PART CODE	PART NAME	Q'ty	SPECIFICATION	REMARK
113	3017906600	SOCKET F LAMP AS	1	250V 1A	
114	3013602500	LAMP	1	240V 25W	
115	7112401211	SCREW TAPPING	1	T1 TRS 4X12 MFZN	
116	3015510700	WINDOW F LAMP	1	MIPS	
117	3016002720	SPECIAL CAP SCREW	2	SM18C	
118	3014807000	SENSOR F AS	1	PT-38	
119	3011442600	COVER F SENS	1	ABS	
120	3018128500	SWITCH LAMP *L	1	SPF101B-2D	
121	3017842600	SHELF F AS	3	FRAME+PRINTED GLASS+FIX	
122	3011114800	CASE F A AS	1	CASE+SILK+FRAME	
123	3011114900	CASE F B AS	1	CASE+SILK+FRAME	
124	3019026700	POCKET F *T	1	HIPS+SILK	
125	3019027400	POCKET F AS	3	BASE+DECO+SILK	
126	3000060410	ASSY F DR	1	FRU-541D	
126-1	3010964600	CAP ICE PATH FRAME	1	HIPS	
126-2	3012318800	GASKET F DR AS	1	PVC	
126-3	3000003700	ASSY F DR URT	1	FRU-541D	
127	3012641500	HANDLE AS	1	FRU-571I	
128	3016002700	SPECIAL SCREW	2	WASR+TRS5X16 MFZN	
129	3010339500	BASE HANDLE *T	1	HIPS	
130	3010339600	BASE HANDLE *U	1	HIPS	
131	7112401211	SCREW TAPPING	8	T1 TRS 4*12 MFZN	
132	3011446400	COVER HNDL DECO *T	1	ABS+SPRAY	
133	3011446500	COVER HNDL DECO *U	1	ABS+SPRAY	
134	3017903702	SOCKET DISP LAMP AS	1	250V 1A 14BASE	
135	3013600020	LAMP	1	240V/15W(E14,CC5A)	
136	3010544000	BOX DISPNS ICE SHUT AS	1	FRU-541D	
137	3011494700	COVER DISPNS BOX AS	1	FRU-541D	
137-1	7173300811	SCREW TAPPITE	7	TT2 BIN 3X8 MFZN	
137-2	30143D5160	PCB FRONT AS	1	FRU-541D	
137-3	3016304700	BUTTON CONTROL A	1	ABS+AL	
137-4	3016304800	BUTTON CONTROL B	2	ABS+AL	
137-5	3015510900	WINDOW F PCB	1	PMMA	
137-6	3011446300	COVER DISPNS BOX	1	ABS+SPRAY	
137-7	3011636900	DECO DISPNS COVR	1	ABS+AL	
137-8	3014235100	PANEL F PCB	1	ABS+SPRAY	
138	3015102200	SPRING ICE D/LEVER	1	SUS	
139	3011495300	COVER ICE FLAP AS	1	FRU-541D	
140	3012019700	FIXTURE ICE SHUT LVR	1	SUS	

NO	PART CODE	PART NAME	Q'ty	SPECIFICATION	REMARK
141	3015402000	VALVE SOL DISP	1	CUBE SN8	
142	3018125800	SWITCH MICRO	1	VP333A-2D	
143	3012213200	FRAME DISPNS BUTTON	1	ABS	
144	3016304600	BUTTON DISPNS	1	SILICON	
145	3012406900	GRILL DISPENSER	1	ABS	
146	3019027500	POCKET DAIRY AS	1	POCKET+COVER	
147	3019027200	POCKET R *M AS	1	BASE+DECO+SILK	
148	3011187000	CASE H/BAR AS	1	CASE+DOOR	
149	3019027700	POCKET R *H AS	1	BASE+DECO+SILK	
150	3019027300	POCKET R *S AS	2	BASE+DECO+SILK	
151	3000060510	ASSY R DR	1		
151-1	3012318900	GASKET R DR AS	1	PVC	
151-2	3012319300	GASKET H/BAR B AS	1	PVC	
151-3	3000058010	ASSY R DR URT	1	FRU-541F	
151-4	3015204500	STOPPER H/BAR DR *R	1	PO T4.0	
151-5	3015204400	STOPPER H/BAR DR *L	1	PO T4.0	
151-6	3012319400	GASKET H/BAR A AS	1	PVC	
151-7	3011765000	DOOR H/BAR URT AS	1	FRU-541F	
151-8	3011497200	COVER FRAME H/BAR	1	ABS	
151-9	3018125600	SWITCH H/BAR DR AS	1	SP101B-2D1(T)	

12-5. FRS(N)-U20GA

CABINET

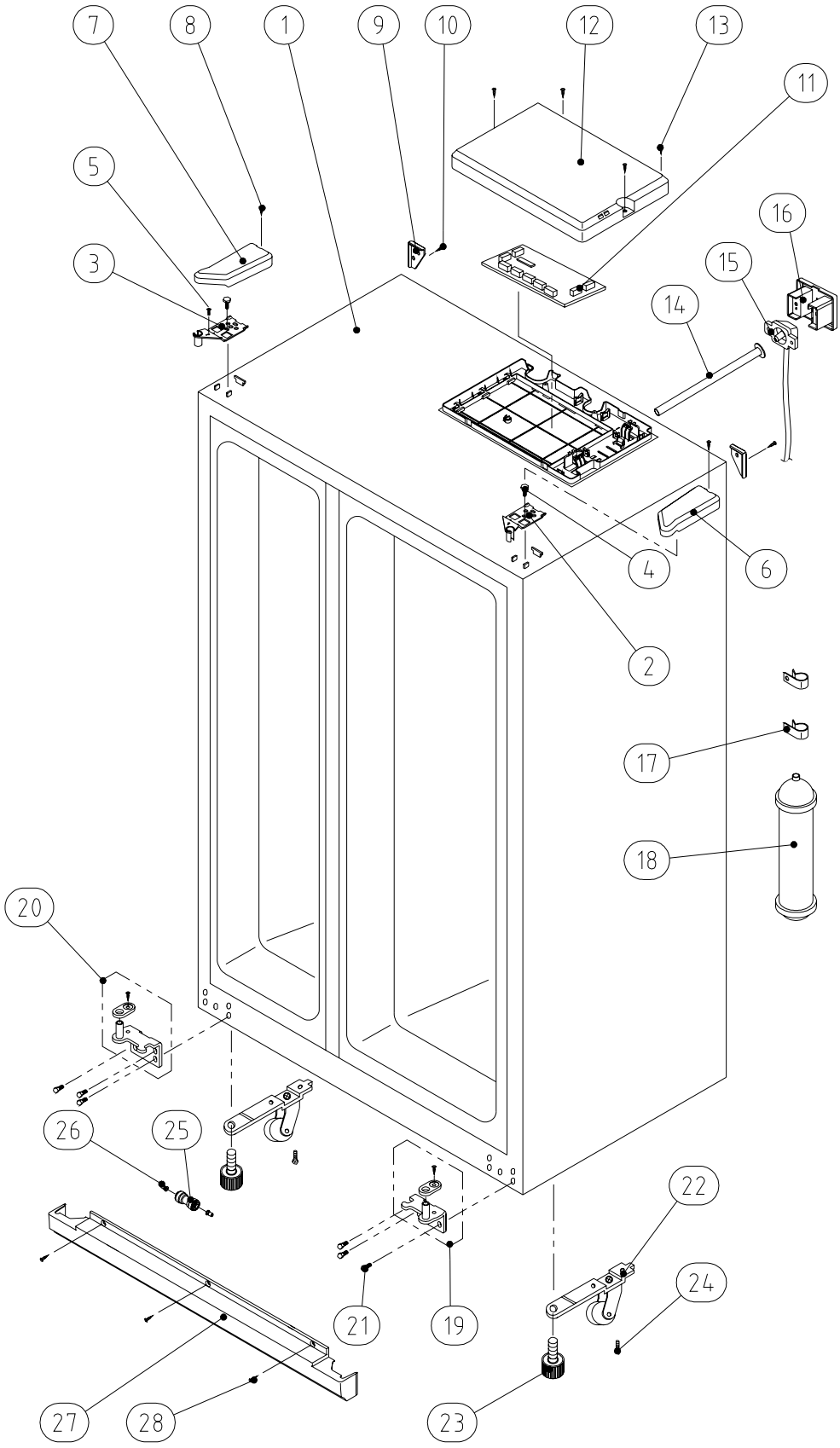

MECH ROOM

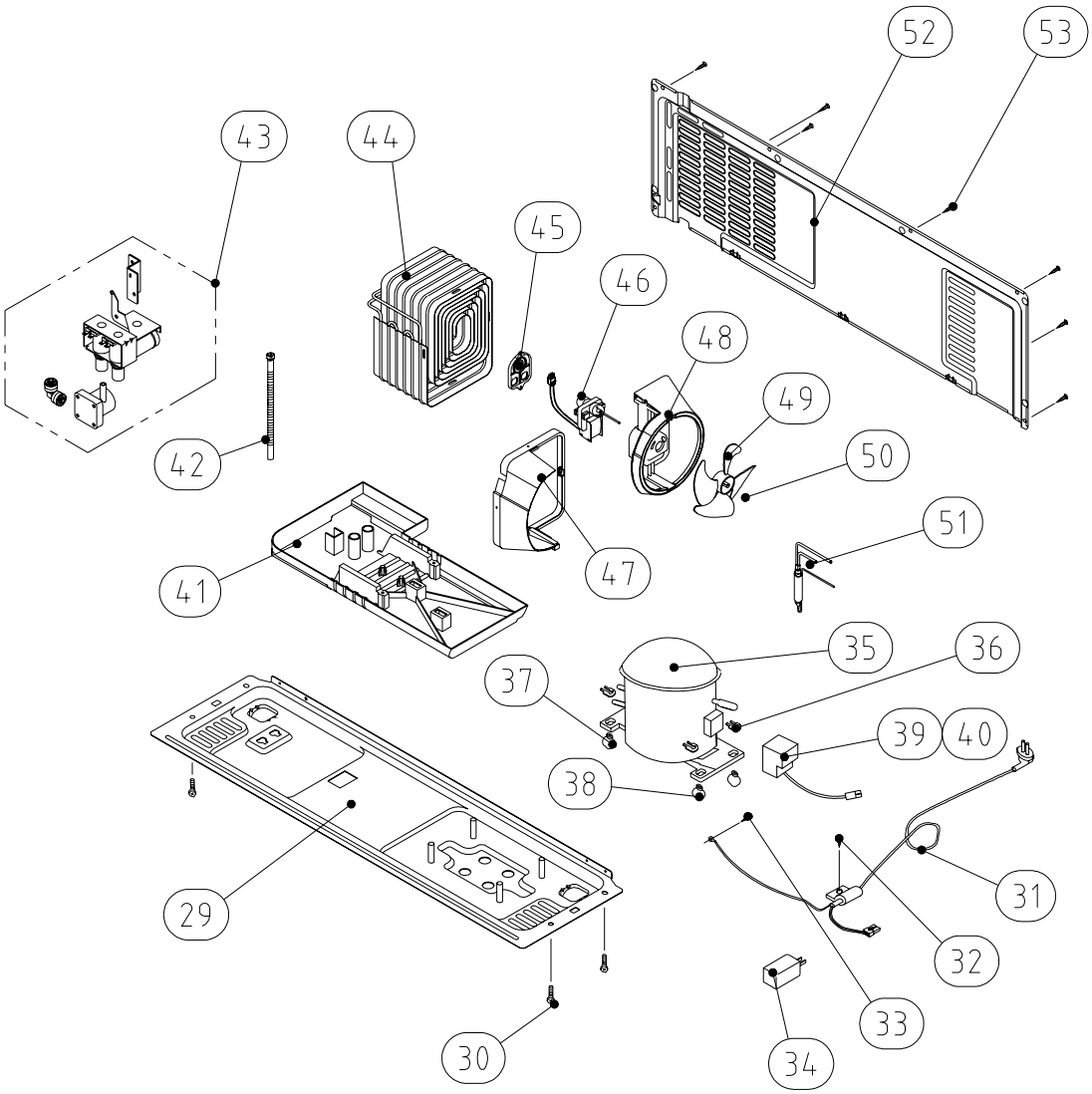
52
53
43
44
45
46
48
49
50
42
51
41
47
35
36
37
39
40
38
31
32
29
33
30
34

R ROOM

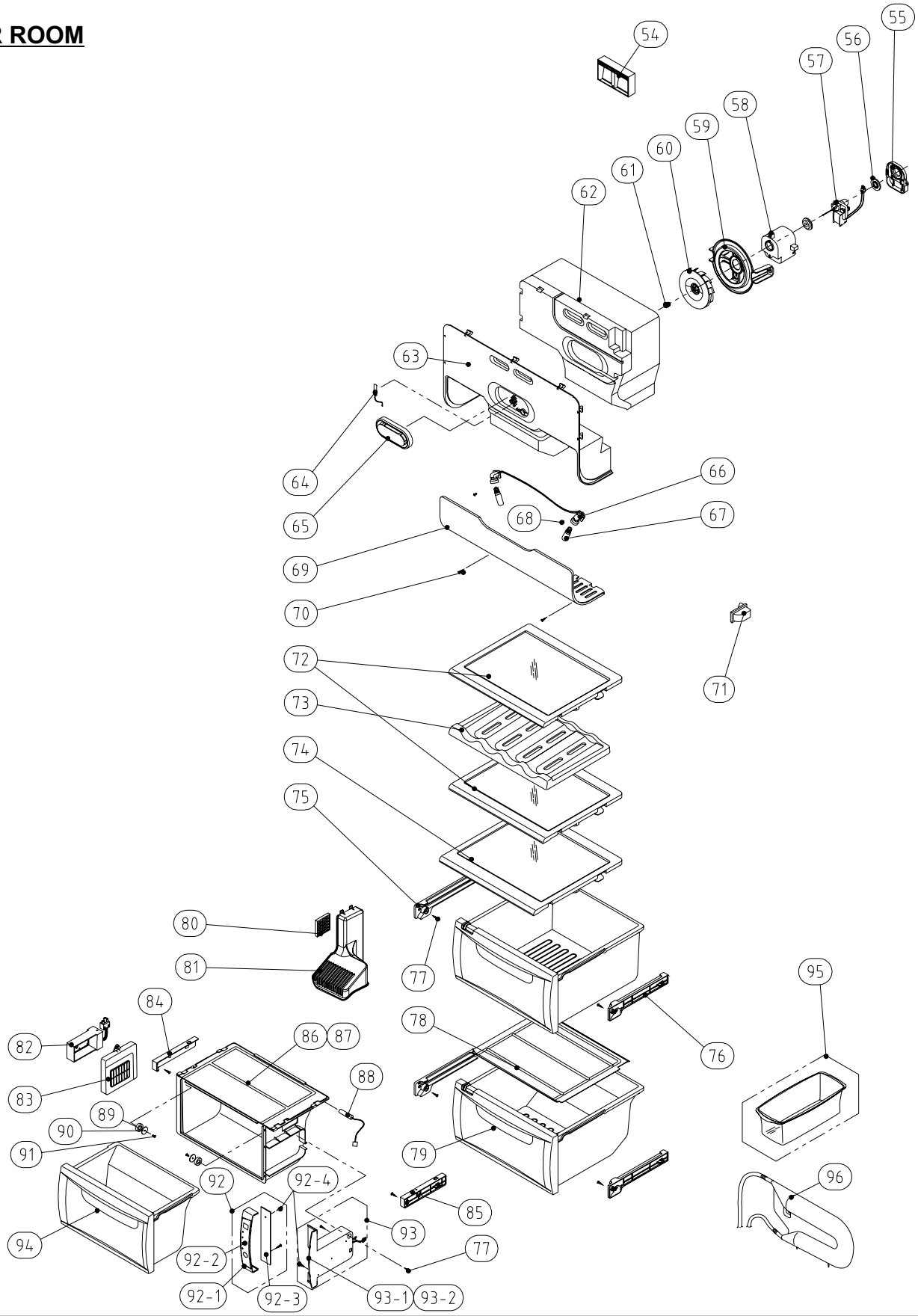
54
55
56
57
58
59
60
61
62
63
64
65
66
67
68
69
70
71
72
73
74
75
76
77
78
79
80
81
82
83
84
85
86
87
88
89
90
91
92
92-1
92-2
92-3
92-4
93
93-1
93-2
94
95
96

F ROOM

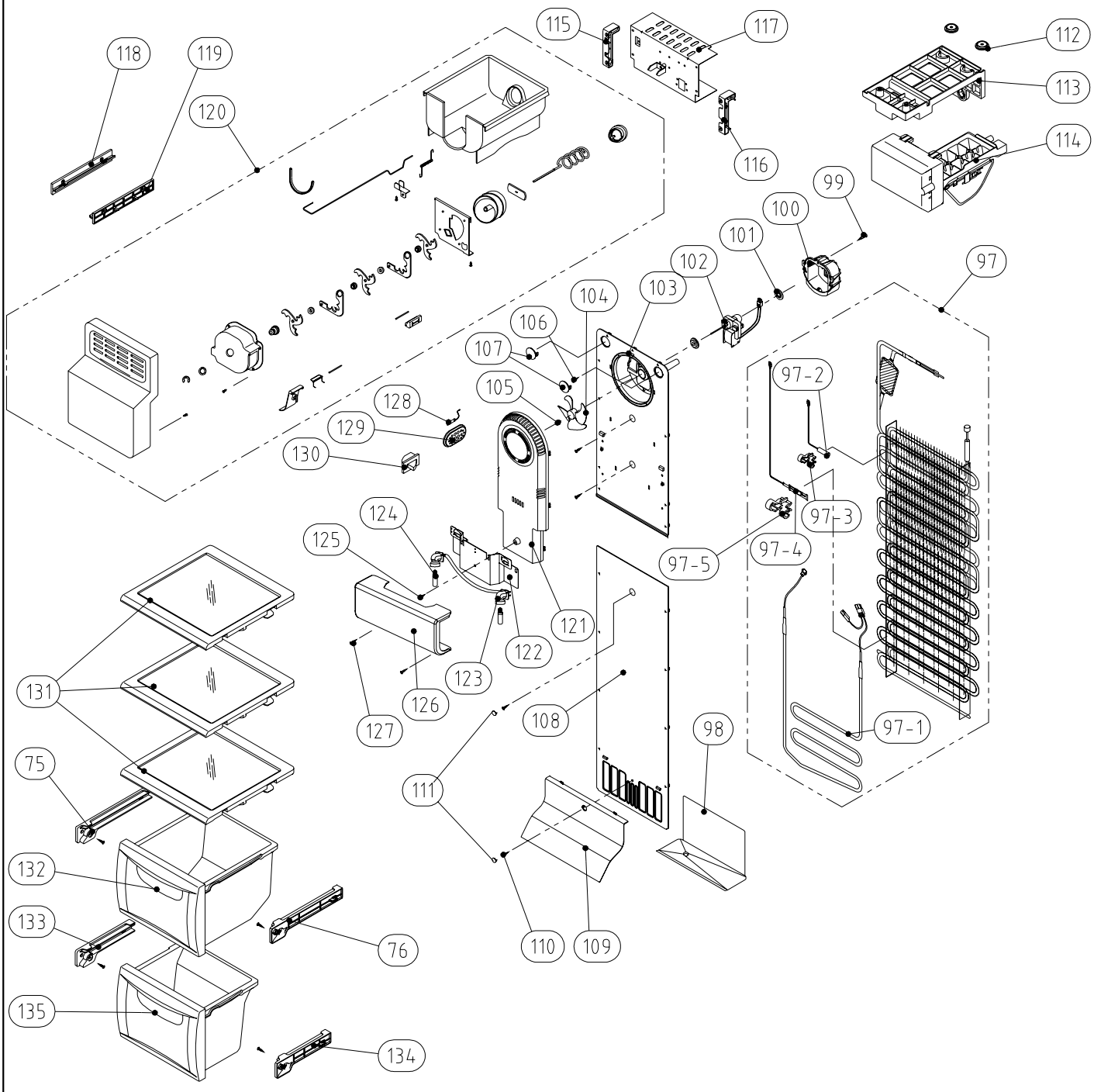
115
117
112
118
119
113
120
116
114
99
100
101
102
97
103
104
106
107
105
97-2
128
129
130
124
125
97-3
97-4
97-5
121
122
123
126
127
131
108
98
97-1
75
111
132
133
76
110
109
135
134

F DOOR

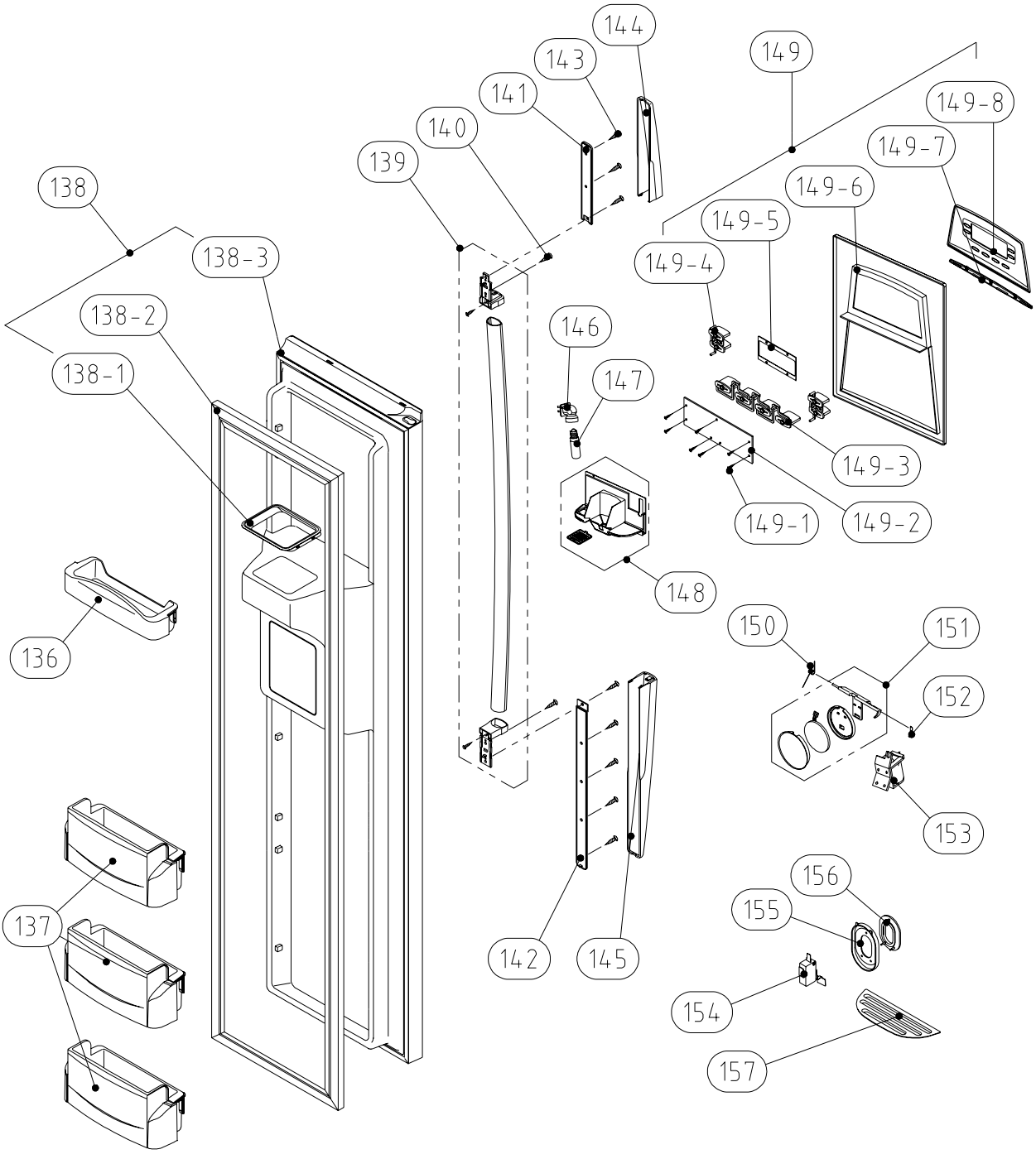
144
143
141
140
139
138
138-3
138-2
138-1
136
137
146
147
148
142
145
149
149-8
149-7
149-6
149-5
149-4
149-3
149-1
149-2
150
151
152
153
156
155
154
157

R DOOR

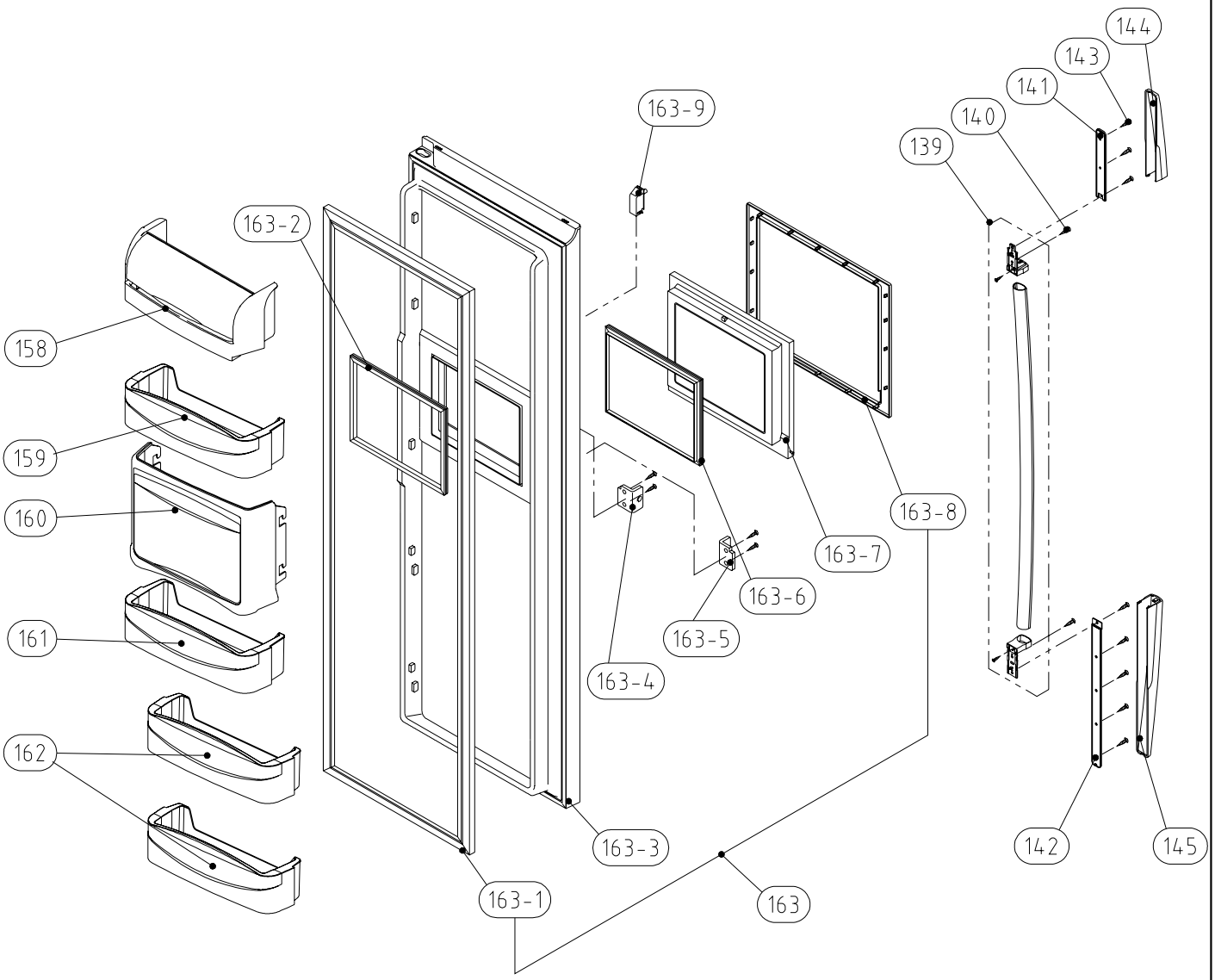
144
143
141
140
139
163-9
163-2
158
159
160
161
162
163-8
163-7
163-6
163-5
163-4
163-3
163-1
163
142
145

NO	PART CODE	PART NAME	Q'ty	SPECIFICATION	REMARK
1	3000057710	ASSY CAB URT	1	FRU-541D	
2	3012924400	HINGE *T *R AS	1	PO T3.0+PAINT	
3	3012924300	HINGE *T *L AS	1	PO T3.0+PAINT	
4	3016042300	SPECIAL *T HI BOLT	2	6X13 SWCH18A	
5	7051401065	SCREW MACHINE	1	PAN 4X10 SW BSNI	
6	3011446200	COVER *T HI *R	1	PP	
7	3011446100	COVER *T HI *L	1	PP	
8	7112401211	SCREW TAPPING	2	T1 TRS 4X12 MFZN	
9	3010968400	CAP CAB COVER	2	PP	
10	7112401211	SCREW TAPPING	2	T1 TRS 4X12 MFZN	
11	30143D5060	PCB MAIN AS	1	FRU-541D	
12	3011446000	COVER MAIN PCB BOX	1	PP(V-235)	
13	7112401211	SCREW TAPPING	4	T1 TRS 4X12 MFZN	
14	3013224800	HOSE ICE MAKER TUBE AS	1	FRU-541D	
15	3012530200	GUIDE CAB W/TUBE A AS	1	FRU-541D	
16	3011444100	COVER GUIDE CAB W/T A	1	HIPS	
17	3011202000	CLAMP WATER TUBE A	2	PA-66, 5N	
18	3019974800	S/PAER FILTER WATER AS	1	FR-S660CW	
19	3012924000	HINGE *U *R AS	1	P/O T5.0 + PAINT	
20	3012923900	HINGE *U *L AS	1	P/O T5.0 + PAINT	
21	3016001240	SPECIAL BOLT *T	6	6X22 SWCH22A(YL)	
22	3010657200	BRACKET ADJ FOOT	2	SPCC T3.0	
23	3012105100	FOOT ADJ AS	2	PP	
24	3016001240	SPECIAL BOLT *T	2	6X22 SWCH22A(YL)	
25	3013064200	HOLDER TUBE A	1	ACETAL	
26	3012019500	FIXTURE TUBE FIT B	2	PP	
27	3011447200	COVER CAB BRKT	1	PP	
28	7142401511	SCREW TAPPING	3	T2 TRS 4X16 MFZN	
29	3010340400	BASE COMP AS	1	FRU-571I	
30	3016003300	SPEICAL BOLT	4	T2 M6.5X20	
31	3011346700	CORD POWER AS	1	FRU-571I	
32	7112401211	SCREW TAPPING	1	T1 TRS 4X12 MFZN	
33	7051401065	SCREW MACHINE	1	PAN 4X10 SW BSNI	
34	3016401920	CAPACITOR RUN	1	400VAC 5UF	
35	3956145250	COMP	1	MK4A5Q-R1U	
36	3016002500	SPECIAL WASHER	4	SK-5, T0.8	
37	3010101600	RUBBER ABSORBER COMP	2	NBR	
38	3010101480	ABSORBER COMP AS	2	FRU-541D	
39	3018129600	SWITCH P RELAY AS	1	265RHB,330	

NO	PART CODE	PART NAME	Q'ty	SPECIFICATION	REMARK
40	3811402200	COVER RELAY	1	MK4A5Q-R1U S/S (R600A)	
41	3011181300	CASE VAPORI AS	1	PP	
42	3013201710	HOSE DRN B	1	PE FRB-5970NB	
43	3015402300	VALVE WATER AS	1	FR-S660CW	
44	3014461510	PIPE WICON AS	1	TSW OD4.76XT0.7	
45	3012021700	FIXTURE MOTR	1	PP	
46	3015916100	MOTOR C FAN AS	1	DC-2213DWCA-3	
47	3018500300	M/BELL B	1	PP	
48	3018500200	M/BELL A	1	PP	
49	3011834700	FAN	1	ABS OD3.17XD150	
50	3011200500	CLAMP FAN	1	SUS 304	
51	3016808100	DRYER AS	1	C1220T-M OD19.05XL135	
52	3011497000	COVER MACH ROOM AS	1	SBHG T0.35	
53	7112401211	SCREW TAPPING	7	T1 TRS 4X12 MFZN	
54	3012214100	FRAME CHECK VALVE AS	1	FRU-571I	
55	3012023700	FIXTURE MOTOR S3	1	PP(NATURAL)	
56	3010107100	ABSORBER MOTOR	2	NBR	
57	3015916000	MOTOR R FAN AS	1	D4612AAA20	
58	3012023900	FIXTURE MOTOR S2	1	PP(NATURAL)	
59	3012023800	FIXTURE MOTOR S1	1	PP(NATURAL)	
60	3011835400	FAN R	1	ABS OD3.17XD110	
61	3011200510	CLAMP FAN	1	SUS 304	
62	3013357300	INSU DAMP AS	1	F-PS	
63	3011445200	COVER DAMP	1	HIPS	
64	3014807100	SENSOR R AS	1	PBN-43B	
65	3011445700	COVER R SENSOR	1	ABS+SPRAY	
66	3017906500	SOCKET R LAMP AS	1	250V/1A	
67	3013602500	LAMP	2	AC 240V 25W(S)	
68	7121300811	SCREW TAPPING	2	T2S PAN 3X8	
69	3015510800	WINDOW R LAMP	1	MIPS	
70	3016002720	SPECIAL CAP SCREW	2	SM18C	
71	3018128600	SWITCH LAMP *R	1	SPF101B-1D	
72	3017842800	SHELF R A AS	2	FRAME+PRINTED GLASS+FIX	
73	3017842500	SHELF WINE	1	GPPS	
74	3017842900	SHELF R B AS	1	FRAME+PRINTED GLASS+FIX	
75	3012514500	GUIDE CASE A *L AS	3	ABS	
76	3012514600	GUDIE CASE A *R AS	3	ABS	
77	7122401611	SCREW TAPPING	10	T2S TRS 4X16 MFZN	
78	3011446600	COVER VEGETB A	1	GPPS	

NO	PART CODE	PART NAME	Q'ty	SPECIFICATION	REMARK
79	3011114600	CASE VEGETB B AS	1	CASE+SILK+FRAME+KNOB	
80	3018701800	DEO ANTI AS	1	W40XT5XL40	
81	3011445900	COVER RETURN DUCT	1	PP	
82	3016767100	DAMPER AS	1	DU24-012	
83	3011450900	COVER DUCT CH RM AS	1	PP+SEAL	
84	3012529500	GUDIE CHANGE RM *L	1	ABS	
85	3012529600	GUDIE CHANGE RM *R	1	ABS	
86	3011446800	COVER CHANGE RM	1	GPPS	
87	3010548200	BOX CHANGE RM	1	HIPS	
88	3014806800	SENSOR M AS	1	PBN-43B	
89	3014700301	ROLLER A	2	PP(NATURAL)	
90	3016003700	SPECIAL WASHER	2	T1.0 OD20	
91	3016040000	SPECIAL SCREW D	2	4X8	
92	3001402500	COVER CONTL CH RM AS	1	COVER+FRONT PCB	
92-1	3011447500	COVER CONTL CH RM	1	HIPS	
92-2	3014533600	PLATE CONTL CH RM AS	1	PC T0.3	
92-3	30143D5360	PCB SUB FRONT AS	1		
92-4	7173300811	SCREW TAPPITE	4	TT2 BIN 3X8 MFZN	
93	3011115100	CASE CONTL CH RM AS	1	CASE+MAIN PCB	
93-1	3011186200	CASE CONTL CH RM	1	HIPS	
93-2	30143D5260	PCB SUB MAIN AS	1	FRU-541G	
94	3011115000	CASE CHANGE RM AS	1		
95	3011171310	CASE EGG AS	1	CASE+VINYL	
96	3018201000	TANK WATER AS	1	FRU-541D	
97	3017053500	EVA AS	1	FRU-571I	
97-1	3012818300	HEATER SHEATH AS	1	AC220V/ 192W	
97-2	3014806900	SENSOR D AS	1	PBN-43	
97-3	3012023600	FIXTURE D SENS	1	PP	
97-4	301720200	FUSE TEMP AS	1	AC250V 10A 77C	
97-5	4017Z90590	FIXTURE FUSE TEMP	1	PP	
98	3012529000	GUIDE DRN	1	GA	
99	7122401211	SCREW TAPPING	1	T2S TRS 4X12 MFZN	
100	3012007800	FIXTURE MOTOR A	1	HIPS	
101	3010107100	ABSORBER MOTOR	2	NBR	
102	3015915900	MOTOR F FAN	1	D4612AAA21	
103	3018921300	LOUVER F A	1	ABS	
104	3011834500	FAN	1	ABS OD3.17XD130	
105	3011200510	CLAMP FAN	1	SUS 304	
106	7122401611	SCREW TAPPING	3	T2S TRS 4X16 MFZN	

NO	PART CODE	PART NAME	Q'ty	SPECIFICATION	REMARK
107	3010968600	CAP F LOUVER B	2	HIPS	
108	3018921500	LOUVER F B AS	1	HIPS	
109	3011443200	COVER F RETURN	1	HIPS	
110	7122401611	SCREW TAPPING	1	T2S TRS 4X16 MFZN	
111	3010924600	CAP F LOUVER	2	HIPS	
112	3012013200	FIXTURE C	2	PP	
113	3012205600	FRAME ICE MAKER	1	HIPS	
114	3000025920	ASSY ICE MAKER	1	FRU-541D(R600A)	
115	3012517800	GUIDE G/MOTR BRKT *L	1	ABS	
116	3012517900	GUIDE G/MOTR BRKT *R	1	ABS	
117	3010658100	BRACKET G/MOTR AS	1	FRS-541D	
118	3012520510	GUIDE ICE CRUSHER *L	1	ABS	
119	3012517710	GUIDE ICE CRUSHER *R	1	ABS	
120	3011115200	CASE ICE CRUSHER AS	1	FRU-541D	
121	3001401700	COVER F FAN AS	1	FRU-571I	
122	3014531900	PLATE F LAMP	1	SGCC T0.8	
123	3017906600	SOCKET F LAMP AS	1	250V 1A	
124	3013602500	LAMP	1	240V 25W	
125	7112401211	SCREW TAPPING	1	T1 TRS 4X12 MFZN	
126	3015510700	WINDOW F LAMP	1	MIPS	
127	3016002720	SPECIAL CAP SCREW	2	SM18C	
128	3014807000	SENSOR F AS	1	PT-38	
129	3011442600	COVER F SENS	1	ABS	
130	3018128500	SWITCH LAMP *L	1	SPF101B-2D	
131	3017842600	SHELF F AS	3	FRAME+PRINTED GLASS+FIX	
132	3011114800	CASE F A AS	1	CASE+SILK+FRAME	
133	3012529700	GUIDE CASE C *L AS	1	ABS	
134	3012529800	GUIDE CASE C *R AS	1	ABS	
135	3011114900	CASE F B AS	1	CASE+SILK+FRAME	
136	3019026700	POCKET F *T	1	HIPS+SILK	
137	3019027400	POCKET F AS	3	BASE+DECO+SILK	
138	3000060410	ASSY F DR	1	FRU-541D	
138-1	3010964600	CAP ICE PATH FRAME	1	HIPS	
138-2	3012318800	GASKET F DR AS	1	PVC	
138-3	3000003700	ASSY F DR URT	1	FRU-541D	
139	3012641500	HANDLE AS	1	FRU-571I	
140	3016002700	SPECIAL SCREW	2	WASR+TRS5X16 MFZN	
141	3010339500	BASE HANDLE *T	1	HIPS	
142	3010339600	BASE HANDLE *U	1	HIPS	

NO	PART CODE	PART NAME	Q'ty	SPECIFICATION	REMARK
143	7112401211	SCREW TAPPING	8	T1 TRS 4*12 MFZN	
144	3011446400	COVER HNDL DECO *T	1	ABS+SPRAY	
145	3011446500	COVER HNDL DECO *U	1	ABS+SPRAY	
146	3017903702	SOCKET DISP LAMP AS	1	250V 1A 14BASE	
147	3013600020	LAMP	1	240V/15W(E14,CC5A)	
148	3010544000	BOX DISPNS ICE SHUT AS	1	FRU-541D	
149	3011494700	COVER DISPNS BOX AS	1	FRU-541D	
149-1	7173300811	SCREW TAPPITE	7	TT2 BIN 3X8 MFZN	
149-2	30143D5160	PCB FRONT AS	1	FRU-541D	
149-3	3016304700	BUTTON CONTROL A	1	ABS+AL	
149-4	3016304800	BUTTON CONTROL B	2	ABS+AL	
149-5	3015510900	WINDOW F PCB	1	PMMA	
149-6	3011446300	COVER DISPNS BOX	1	ABS+SPRAY	
149-7	3011636900	DECO DISPNS COVR	1	ABS+AL	
149-8	3014235100	PANEL F PCB	1	ABS+SPRAY	
150	3015102200	SPRING ICE D/LEVER	1	SUS	
151	3011495300	COVER ICE FLAP AS	1	FRU-541D	
152	3012019700	FIXTURE ICE SHUT LVR	1	SUS	
153	3015402000	VALVE SOL DISP	1	CUBE SN8	
154	3018125800	SWITCH MICRO	1	VP333A-2D	
155	3012213200	FRAME DISPNS BUTTON	1	ABS	
156	3016304600	BUTTON DISPNS	1	SILICON	
157	3012406900	GRILL DISPENSER	1	ABS	
158	3019027500	POCKET DAIRY AS	1	POCKET+COVER	
159	3019027200	POCKET R *M AS	1	BASE+DECO+SILK	
160	3011187000	CASE H/BAR AS	1	CASE+DOOR	
161	3019027700	POCKET R *H AS	1	BASE+DECO+SILK	
162	3019027300	POCKET R *S AS	2	BASE+DECO+SILK	
163	3000060510	ASSY R DR	1		
163-1	3012318900	GASKET R DR AS	1	PVC	
163-2	3012319300	GASKET H/BAR B AS	1	PVC	
163-3	3000058010	ASSY R DR URT	1	FRU-541F	
163-4	3015204500	STOPPER H/BAR DR *R	1	PO T4.0	
163-5	3015204400	STOPPER H/BAR DR *L	1	PO T4.0	
163-6	3012319400	GASKET H/BAR A AS	1	PVC	
163-7	3011765000	DOOR H/BAR URT AS	1	FRU-541F	
163-8	3011497200	COVER FRAME H/BAR	1	ABS	
163-9	3018125600	SWITCH H/BAR DR AS	1	SP101B-2D1(T)	



DAEWOO ELECTRONICS CORP.
686, AHYEON-DONG, MAPO-GU,
SEOUL, KOREA.
C.P.O. BOX 8003 SEOUL KOREA

PRINTED DATE : JULY 2005