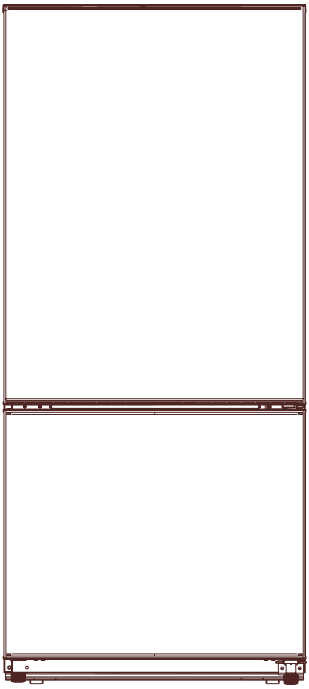

529 L Bottom Mount Refrigerator

Model Number: HV-RBM529

INSTRUCTION MANUAL

AFTER SALES SUPPORT
(AU) 1300 886 649 (NZ) 0800 836 761

Contents

03 General Safety Instructions

07 Product Overview

08 Getting Started

10 Instructions

15 FAQs and Troubleshooting Guide

18 Other Useful Information

General Safety Instructions

READ CAREFULLY AND KEEP FOR FUTURE REFERENCE

Read this manual thoroughly before first use, even if you are familiar with this type of product. The safety precautions enclosed herein reduce the risk of fire, electric shock and injury when correctly adhered to. Keep the manual in a safe place for future reference, along with the completed warranty card, purchase receipt and carton. If applicable, pass these instructions on to the next owner of the appliance.



Pay particular attention to messages that follow this safety alert symbol or the words **DANGER**, **WARNING** or **CAUTION**. These words are used to alert you to a potential hazard that can seriously injure you and others. The instructions will tell you how to reduce the chance of injury and let you know what can happen if the instructions are not followed.



This symbol alerts you to take care as the appliance contains flammable materials: isobutane as refrigerant and cyclopentane as insulation blowing gas. While isobutane (R600a) is a gas with a high level of environmental compatibility, it is nevertheless flammable. Do not expose the appliance to high heat, sparks and open flames.

Refrigerant matters

WARNING: Do not damage the refrigerant circuit! Never use an appliance with a damaged refrigerant circuit! If the refrigerant circuit becomes damaged during transport or installation, avoid proximity to open fires and all types of heat and ignition sources. Thoroughly ventilate the room in which the appliance is located.

The room for installing the appliance must be at least 1 m^3 per 8 g of refrigerant. The amount and type of refrigerant in the appliance can be found in the technical specifications on page 23 and on the appliance rating plate. It is hazardous for anyone other than an authorised service person to service this appliance. In Queensland, the authorised service person MUST hold a Gas Work Authorisation for hydrocarbon refrigerants to carry out servicing or repairs which involve the removal of covers.

Responsible disposal

At the end of its working life, do not throw this appliance out with your household waste. Electrical and electronic products contain substances that can have a detrimental effect on the environment and human health if disposed of inappropriately. Observe any local regulations regarding the disposal of electrical consumer goods and dispose of it appropriately for recycling and recovery of the refrigerant and blowing agent.

WARNING! This refrigeration appliance contains flammable refrigerants and insulation blowing gases, which must be removed before disposal. Contact your municipal authorities for any codes or regulations concerning the disposal of such materials.

DANGER! Risk of child entrapment: When discarding this or another refrigerator, pull the plug out of the socket, cut the connection cable (as close to the appliance as you can) and remove the doors to prevent playing children to suffer electric shock or to get trapped inside the appliance. If the discarded appliance has a spring lock (latch) on the door or lid, make the spring lock unusable to prevent it from becoming a death trap for children.

General Safety Instructions (Cont.)

To reduce the risk of fire, electric shock or injury, always follow basic safety precautions and accident prevention measures when using this appliance, including the following:

Electrical safety

- **Voltage:** Plug the appliance in a 220–240 V, 50 Hz, properly earthed power outlet, which must be in good working order. Make sure your outlet voltage and circuit frequency correspond to the voltage stated on the appliance rating label.
- **Power connection:** Do not use an adaptor; do not use an extension cord. Plug the power plug directly into a separate power point that cannot easily be turned off accidentally, and that is easily accessible so you can switch it off when required.
- **Power cord:** Do not kink or damage the power supply cord. Do not attempt to lengthen it. Do not leave the cord exposed or dangling. Secure it behind the appliance so no one steps on or places anything on the cord or against it. A squashed or damaged power plug may overheat and cause a fire.
  WARNING: When positioning the appliance, ensure the power supply cord is not trapped or damaged. Do not locate multiple portable socket outlets or portable power supplies at the rear of the appliance.
- **Damaged cord:** Do not use a cord that shows cracks or abrasion damage along its length or at either end. Any damage to the cord may cause a short circuit, fire and/or electric shock. If the power cord is damaged, it must be replaced by the manufacturer or its service agent. Contact the after sales support line for advice.
- **WARNING!** The **light bulb** supplied with this appliance is a special use bulb, which is only suitable for use with this appliance, it is not usable for domestic lighting. Do not use the appliance without the lamp properly installed. Do not touch the light bulb if it has been on for a long period of time, as it could be very hot. The interior lamp can only be replaced by authorised service personnel. Please contact our after sales support centre for a service if the lamp needs replacing.
- **Disconnection:** Never unplug the unit by pulling the cord. Always grip the plug firmly and pull straight out from the power point.
- **Electrical work:** All electrical work associated with the installation must be carried out by a licensed electrician.

Usage conditions and restrictions

- **Indoor domestic use only:** This appliance is intended for indoor household use only. It is not suitable for industrial or commercial use. Do not use this appliance for anything other than its intended purpose, and only use it as described in this manual. Do not attempt to alter or modify this appliance in any way.
- This appliance is intended to be used in household and similar applications, such as:
  - staff kitchen areas in shops, offices and other working environments;
  - farm houses and by clients in hotels, motels and other residential type environments;
  - bed and breakfast type environments;
  - catering and similar non-retail applications.

After Sales Support
☎ (AU) 1300 886 649 (NZ) 0800 836 761 | 💻 tempo.org/support

General Safety Instructions (Cont.)

- **Usage restrictions:** This appliance is not intended for use by persons (including children) with reduced physical, sensory or mental capabilities, or lack of experience and knowledge, unless they have been given supervision or instruction concerning the use of the appliance by a person responsible for their safety.
- **Children:** Supervise children to ensure they do not play with the appliance. Close supervision is necessary when any appliance is used by or near children. Never allow children to operate, play with or crawl inside the appliance.
- **WARNING!** Do not use any **electrical appliances** (such as ice cream makers) inside refrigeration appliances, unless they are approved for this purpose by the manufacturer.

Cleaning and maintenance

- **Disconnect**: Switch off and unplug the appliance from the mains socket before cleaning, maintenance or servicing. Failure to do so can result in electric shock, injury or death. Do not connect or disconnect the plug when your hands are wet.
- **Flames**: Do not let open flames or ignition sources enter the appliance.
- **Flammable/explosive substances**: Never clean this appliance with flammable fluids. Do not store or use volatile, flammable or explosive substances such as aerosol cans with a flammable propellants in or close to this or any other appliance. The fumes can create a fire hazard or explosion.
- **Solvents**: Do not use solvent based cleaning agents or abrasives on the interior as these may damage or discolour the surfaces of the appliances.
- **WARNING!** Do not use **mechanical devices** or other means to accelerate the defrosting process, other than those recommended by the manufacturer. Never use a sharp or metal instrument to remove frost or clean the fridge. Use a plastic scraper, if necessary.
- **Service**: Do not attempt to repair, modify or replace any part of the appliance unless specifically recommended in this manual. Refer all other servicing to a qualified service technician, or contact the after sales support centre for advice.

Installation (see pages 8-9 for comprehensive installation instructions)

- **Heavy:** This appliance is heavy, take care when moving it. To avoid back or other injury, consider a two person lift or mechanical aid when installing it. Failure to do so can result in back or other injury.
- **WARNING:** Connect to potable water supply only.
- **Water pressure:** Minimum/Maximum inlet water pressure: 138/827 kPa (20/120 psig)
- **Freestanding design:** This appliance is designed to be freestanding only and should not be recessed or built in.
- **Keep it upright:** Do not tilt the fridge more than 45º from upright when moving it.
- **Handle with care:** Do not apply force to any part such as the condenser or door.
- **WARNING: Ventilation:** To ensure proper ventilation, keep any ventilation openings, in the appliance enclosure or in the built-in structure, clear of obstructions. Ensure adequate air circulation around the appliance to prevent overheating.

General Safety Instructions (Cont.)

- **Level:** Install the appliance level in order to ensure proper operation (see page 9).
- **Location:** Install the appliance in an area that meets the following requirements:
- **Ambient temperature:** The ambient temperatures must correspond to the climate class (T) indicated on the rating plate of the appliance (16 °C–43 °C).
- **Floor surface:** The floor must be sturdy, level (or nearly level) and strong enough to support the unit when it is fully loaded. If you must position the appliance on carpet, use a plastic carpet protector underneath the appliance.
- **Areas to avoid:** Avoid areas where the appliance would be exposed to direct sunlight, sources of heat (stove, heater, radiator, etc.), extreme cold ambient temperatures or excessive moisture and high humidity (such as outdoors or exposed to wind, rain water spray or drips). Installing it in the coolest area of the room will save energy consumption and running costs.

After Sales Support
☎ (AU) 1300 886 649 (NZ) 0800 836 761 | 💻 tempo.org/support

Product Overview

Scope of delivery

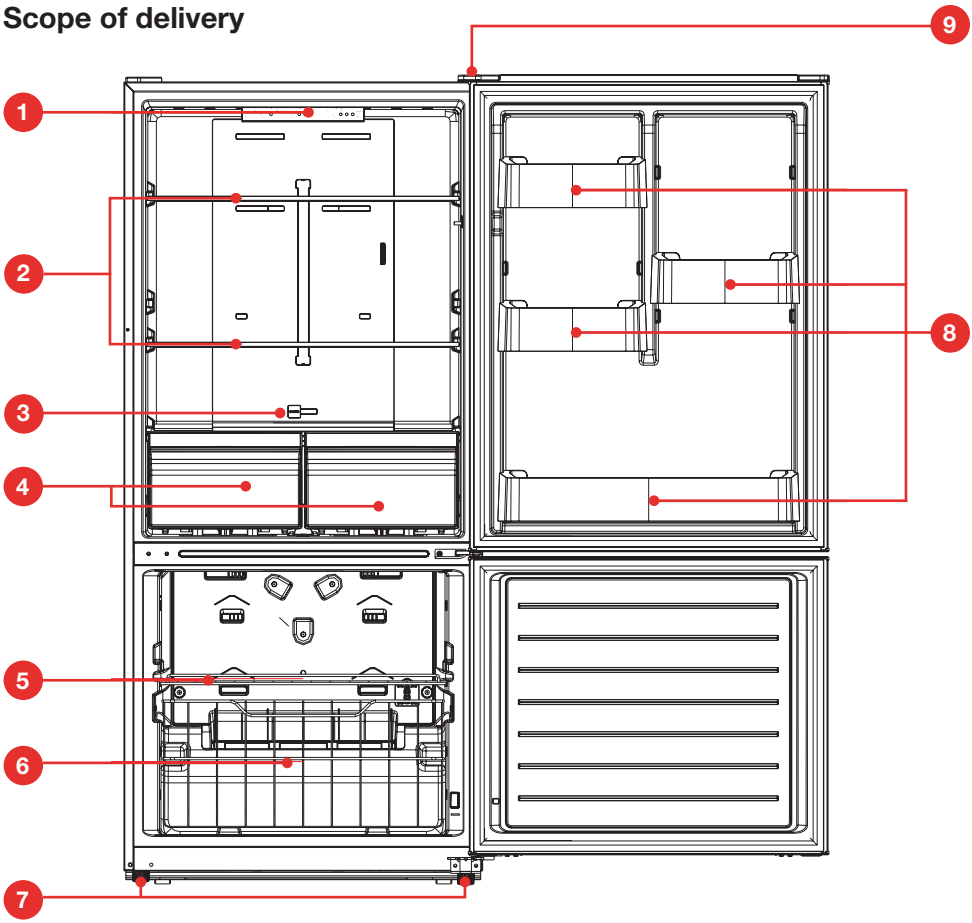

Top mount refrigerator

1 LED lighting and temperature control panel
2 Glass Fridge shelves (x2)
3 Humidity Control
4 Fruit and Vegetable Crisper Drawers
5 Steel wire freezer shelf
6 Steel wire freezer drawer
7 Leveling feet
8 Door balconies (3x half size, 1x full size)
9 Door Hinge

Other inclusions (not shown)

Accessory kit (for door reversal)
Instruction manual
Quick start guide
Warranty certificate

NOTE: Due to continued product improvement, images and illustrations in this manual may vary slightly from the product purchased. All images in this manual are for reference purposes only. Parts are not necessarily pictured to scale.

Getting Started

Unpacking

- **Packaging materials:** This product has been packaged to protect it against transportation damage. Remove all packaging materials from around and inside the appliance and keep the original packaging carton and materials in a safe place. It will help prevent any damage if the product needs to be transported in the future, and you can use it to store the appliance when it is not in use. In the event that the carton is to be disposed of, please recycle all packaging materials where possible.

  Plastic wrapping can be a suffocation hazard for babies and young children, so ensure all packaging materials are out of their reach and disposed of safely.
- **Parts:** Check to ensure you have all the parts listed in the Product Overview section.
- **Damage:** When unpacking, check the appliance carefully for damage. If it is damaged, do not install the appliance. Contact our after sales support centre for advice on examination or return of the damaged appliance.
- **Power cord:** Unwind the power cord to its full length and inspect it for damage. Do not use the appliance if the appliance or its cord has been damaged or is not working properly. In case of damage, contact our after sales support centre for advice on examination, repair or return of the damaged product.
- **Read the manual:** Before installing your new fridge, read all safety instructions, especially the sections on installation and electrical safety on pages 4-5. Installation instructions follow below and on the next page.

Installation

Space requirements

- **Door opening:** Place the unit so there is enough space for the doors to open easily.
- **Clearances:** Ensure that air can circulate freely around the back of the cabinet, which is necessary to cool the compressor and condenser. Allow at least 100 mm clear space at the back of the unit (Fig. 1) and 100 mm at the sides (Fig. 2).

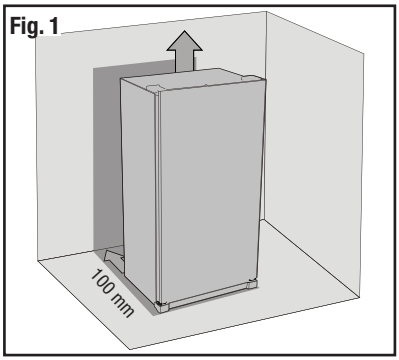

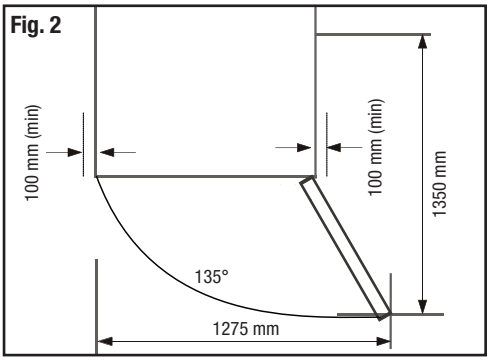

After Sales Support
☎ (AU) 1300 886 649 (NZ) 0800 836 761 | 💻 tempo.org/support

Getting Started (Cont.)

- **Overhanging wall units:** To ensure best performance, if the appliance is positioned below an overhanging wall unit, the minimum distance between the top of the cabinet and the wall unit must be at least 300 mm. Ideally, however, the appliance should not be positioned below overhanging wall units.

Levelling the appliance

The appliance must be installed level so that it can work properly and the magnetic doors seals are properly aligned. To level the unit, tilt it slightly backward, then adjust one or both levelling feet at the base of the cabinet (Fig. 3) until the unit is level (Fig. 4).

Fig. 3

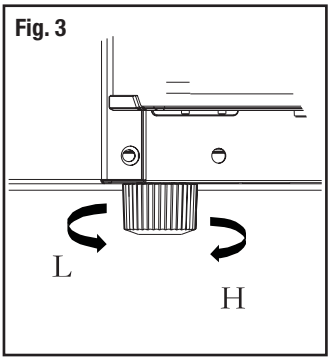

Fig. 4

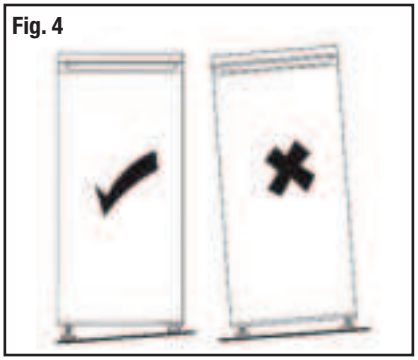

Setting up

- **Cleaning the interior:** Make sure the fridge is disconnected from the power supply before cleaning the interior. Remove any tape that secured drawers, trays and shelves during transport. Clean the interior surfaces and all internal accessories with lukewarm water, a soft cloth and a neutral/mild soap/detergent. This will remove any dust from transit and storage and help remove the typical smell of a brand new product. Then dry thoroughly. **CAUTION:** Do not use harsh or abrasive detergents or powders as these will damage the finish.
- **Before plugging in your new fridge, let it stand upright for at least 4 hours.** This will allow the refrigerant gases to settle into the compressor and reduce the possibility of a malfunction in the cooling system.
- **Connecting the appliance:** Plug the unit into a dedicated, properly installed and earthed wall outlet. **WARNING!** It must be possible to disconnect the appliance from the mains power supply; the plug must therefore be easily accessible after installation. Secure the power supply cord behind the unit. Do not leave it exposed or dangling to prevent injury and accidental disconnection from the power supply.
- **Earthing:** The appliance must be earthed. The plug of the power supply cord is equipped with a contact for this purpose. Do not under any circumstances cut or remove the third (earth) prong from the power cord. If the plug does not fit your outlet, please consult a licensed electrician for advice to have the outlet changed.

Temperature regulation

This refrigerator has a temperature control panel (Fig. 5) at the top of the fridge compartment. The fridge and freezer compartments have independent controls so you can adjust the temperature in each compartment separately according to the food stored. For each compartment, you can choose between three temperature levels.

First Use

The first time you turn the unit on, set the temperature controls of both compartments to the coldest option for 2–3 hours before loading the compartments. When the temperature has been reached and the thermostat starts cycling off and on, adjust the temperature to the settings that best suit your needs and place food in the compartments.

Fig. 5

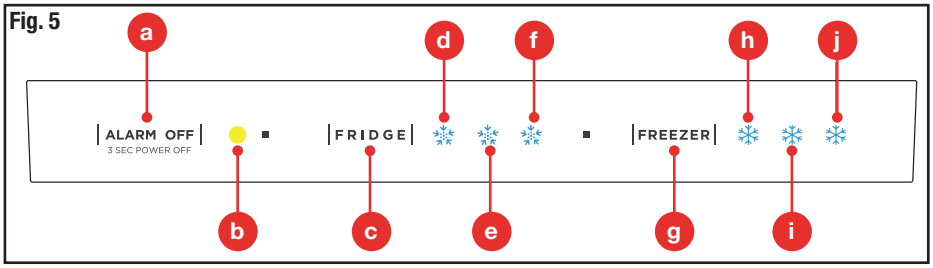

Refrigerator: To adjust the fridge temperature, press the |FRIDGE| button (c) repeatedly. The temperature will change and the LEDs (d, e, and f) will illuminate following the cycle below:



The middle setting should be appropriate for normal usage.

Freezer: To adjust the freezer temperature, press the |FREEZER| button (g) repeatedly. The temperature will change and the LEDs (h, i, and j) will illuminate following the cycle below:



The middle setting should be appropriate for normal usage.

- When making ice cubes, or after you have added larger quantities of unfrozen food, set the control temporarily to the coldest setting for fast freezing.

After Sales Support
☎ (AU) 1300 886 649 (NZ) 0800 836 761 | 💻 tempo.org/support

Instructions (Cont.)

Alarm Function: When the fridge or freezer door is kept open for more than 120 seconds, an alarm will sound until the door has been properly closed. Alternatively, press the |ALARM OFF| button (a) to turn off the alarm.

If a fault occurs (see page 17), an alarm will sound. Press the |ALARM OFF| button to turn off the alarm.

Press this |ALARM OFF| key for three seconds to enter standby mode. In standby mode, the lights and display will switch off. To exit standby mode, press the alarm off button for another three seconds.

Ice maker: When the refrigerator has been operating normally for 40 seconds, the ice maker will open.

NOTE:

- The appliance may not operate at the set temperature on particularly hot days, or if it is located in a particularly hot area, or if the door is opened too frequently.
- On hot summer days, when ambient temperatures are high and the thermostat is set to a colder setting, the compressor may run continuously to maintain the low temperatures in the compartments.

Fresh food storage

The fridge compartment is suitable for short-term storage of all your fresh food.

- The **temperature** inside the fridge compartment varies depending on the amount of food stored and the frequency of door opening. It is low enough to limit some bacterial growth, but it is not suitable for long-term storage of perishable foods.
- The walls of the fridge are equipped with a series of runners so that you can position the glass shelves to suit your individual storage requirements. Lift the shelf slightly as you slide it out.
- The door balconies in the fridge compartment are suitable for storage of food and drink bottles, cans and jars. They may be placed at different heights: gradually pull a balcony up until it is free, then reposition it as required.
- The easy-to-pull-out crisper drawer(s) can be either used as a traditional crisper, or in “quick freezing mode” to freeze items in a short period of time. These crisper drawers are covered with a glass shelf to help you keep your fruit and vegetables (or other items) fresh. Slide the humidity regulator to the right to use the crisper normally (Fig. 6).

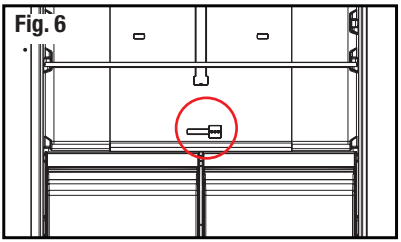

Instructions (Cont.)

- To use the drawer in quick freezing mode, slide the humidity regulator to the left (Fig. 7). Do not store fresh fruit, vegetables, carbonated drinks, or other items that you do not wish to freeze in the drawer while it is in this mode.

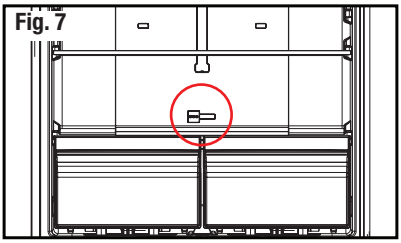

Fresh food storage tips

- In order to maintain good cooling efficiency and save energy, do not open the doors for too long or too often.
- Do not overload the fridge.
- Keep enough space around items for cold airflow.
- Do not block ventilation openings.
- Do not place items directly against the back wall.
- Let hot food cool down to room temperature before storing them in the fridge. Otherwise the cooling capacity will be affected and power consumption increased. Hot items may also affect the plastic parts inside the appliance.
- If necessary, wipe containers clean and dry before storage in the refrigerator.
- Thaw frozen foods in the fridge compartment to ensure safety and save energy.
- Use sealed containers or storage bags to prevent food from drying out, losing its taste or taking on aromas from other foods.
- Cover cooked foods and store them on any shelf in the fridge compartment.
- Store butter and cheese in airtight containers, or wrap them thoroughly.
- Make sure milk bottles are properly closed before storage on a door balcony.
- Do not keep bananas, potatoes, onions and garlic in the refrigerator.

After Sales Support
☎ (AU) 1300 886 649 (NZ) 0800 836 761 | tempo.org/support

Instructions (Cont.)

The freezer compartment

The freezer compartment, located at the top of the appliance, is equipped with a glass shelf and door balcony for convenient access and organised storage. It is suitable for freezing domestic quantities of fresh food and long-term storage (up to three months) of frozen food.

Freezing fresh food

- Do not store food uncovered in the freezer. Always use good quality, freezer-proof packaging to maintain food quality. Remove air from packages of solid food and seal bags tightly before freezing.
- Ensure that food placed in the freezer is dated and labelled. This will help you keep track of storage times.
- Keeping portions small will ensure they are frozen (and subsequently defrosted) rapidly.
- Make sure that fresh, unfrozen food packages do not touch food that is already frozen, thus avoiding a temperature rise in the frozen food.
- When freezing food, do not push food together too much, leave some space for air to circulate around each item. Do not place packages directly against the back wall.
- When adding large amounts of fresh food to the freezer, keep in mind that it will take approximately 24 hours for fresh food to freeze to solid frozen state. For best results, do not add other fresh food to the freezer drawer during this time.
- Do not place hot foods or liquids which may evaporate in the freezer compartment.

Storing frozen food

- When buying frozen food, only buy quantities that you can store straight away; use an insulated container/bag for your shopping and when you get home, place the food in the freezer immediately.
- When storing pre-packed, commercially frozen food, follow the food manufacturer's instructions for storing the food in a home freezer. Do not exceed any storage times listed on the packaging.
- Once you have opened a packet of frozen food, rewrap it airtight to prevent surface evaporation which causes drying or freezer burn.
- Do not store bottles in the freezer as they may shatter. Do not store carbonated liquids such as bottles of fizzy drink in the freezer as the container could explode under pressure and damage the freezer.
- Do not refreeze food once it has been defrosted. If it has thawed accidentally, use it up immediately or throw it away. Alternatively, if the food is uncooked and has not been completely defrosted, it may be cooked and then refrozen.
- **CAUTION!** Do not remove items from the freezer if your hands are damp or wet as this could cause skin abrasions.

Instructions (Cont.)

Energy saving tips

- Locate the appliance in the coolest area of the room, away from heat-producing appliances and out of direct sunlight.
- Let hot foods cool to room temperature before placing them in the freezer. Overloading the compartments forces the compressor to run longer.
- Wrap foods properly, and wipe containers dry before placing them in the freezer compartment. This cuts down on frost build-up inside the unit.
- Do not line the storage drawers or shelves with aluminium foil, wax paper or paper towelling. Liners interfere with cold air circulation, making the appliance less efficient.
- Do not pack food packages close together as this prevents air circulating. Position packages so that air can circulate freely around them.
- Organise and label food to reduce door openings and extended searches. Remove as many items as needed at one time and close the door as soon as possible.
- Do not open the door of the fridge or freezer compartment unnecessarily or leave it open for longer than required, especially during a power failure.
- Do not run the appliance permanently on the lowest temperature setting.

Power failure

- Most power failures are corrected within a few hours and should not affect the temperature inside your fridge or freezer compartments, if you minimise the number of times the doors are opened. However, if the power is going to be off for a longer period of time, you need to take proper steps to protect your food.
- Do not refreeze frozen food without checking its condition first. If in doubt, discard the food. Do not refreeze food that has thawed completely.

Going away?

- **Short vacation**: Leave the appliance operating during vacations of less than a month.
- **Long vacation**: If you are not going to use the appliance for longer periods, remove all food and unplug the power cord. Clean and dry the interior thoroughly. To prevent odour and mould growth, leave the door open slightly, blocking it open, if necessary. (Restrict children's access to the room with the open appliance to avoid creating a child entrapment risk.)

Moving the appliance

- Remove all food from inside the fridge and freezer compartments, securely tape down the drawers and shelves and tape the doors shut. Turn the levelling feet up to the base to avoid damage.
- Protect the outside of the unit with a blanket or similar soft material and make sure the appliance stays secure in the upright position during transportation.

After Sales Support
☎ (AU) 1300 886 649 (NZ) 0800 836 761 | 💻 tempo.org/support

FAQs and Troubleshooting Guide

If you experience a problem with the appliance, check in the following table for solutions to help you solve the problem. If none of the solutions offered help you solve the problem, please contact our after sales support centre for advice.

Problem	Possible cause
The appliance does not operate.	• It is not plugged in. Ensure it is properly plugged in and there is power at the socket (plug another appliance into the outlet to check). • The circuit breaker tripped or has blown a fuse. • The fridge temperature control is set too warm. • A general power outage has cut power to your home (check the household lights).
The appliance turns on and off frequently.	• The room temperature is hotter than normal. • A large amount of food has been added to one of the compartments. • The fridge or freezer door is opened too often, or not closed completely. • The door gasket does not seal properly. Check and ensure the doors are properly aligned. • The appliance does not have the correct clearances around it for air circulation.
There are vibrations.	• The appliance is not level.
The appliance seems to make too much noise.	• A rattling noise may come from the flow of the refrigerant, which is normal. • As each cycle ends, you may hear gurgling sounds caused by the flow of refrigerant. • Contraction and expansion of the inside walls may cause popping and crackling noises. • The appliance is not level. Readjust the feet. • The appliance is touching the wall or other object. Move it slightly.
The door(s) will not close properly.	• The appliance is not level. • The door gasket is dirty or bent. • The shelves, drawers or balconies are out of position.
The appliance door will not open.	• If the door has just been opened, leave it for a few seconds to allow the air pressure to equalise before trying again.

FAQs and Troubleshooting Guide (Cont.)

Problem	Possible cause
The appliance freezes or cools too much.	• The temperature is set too cold. Turn it to a warmer setting temporarily.
Food in the freezer compartment is not properly frozen.	• The freezer temperature is set too warm; set it to a colder setting. • The freezer door was opened for too long or too frequently. • If a large amount of food has been added to the freezer compartment, turn the temperature control to a colder setting temporarily. • The appliance is located near a heat source.
Moisture forms on the inside or outside walls of the appliance.	• Hot and humid weather increases the internal rate of frost build-up. This is normal. • Open the door less often and make sure it is always properly closed.
The external appliance surface is warm.	• The exterior walls can be warmer than room temperature. This is normal while the compressor works to transfer heat from inside the fridge or freezer compartments.
Excessive frost and ice has built up.	• The freezer door has been left open. • Something is preventing the door from closing. • The door gasket is dirty or damaged.
Heavy build-up of frost on the door seal.	• The door seal is not airtight. Carefully warm the leaking sections of the seal with a hair dryer (on a cool setting). At the same time, shape the warmed door seal by hand until it sits correctly.
The compressor runs continuously.	• The temperature is set too cold: select a warmer setting. • A door is open, or something is obstructing proper door closure. • A door gasket is worn, dirty or damaged. • Large quantities of food have been added to the appliance. • The room temperature is hotter than usual.

After Sales Support
☎ (AU) 1300 886 649 (NZ) 0800 836 761 | 💻 tempo.org/support

FAQs and Troubleshooting Guide (Cont.)

If you experience a problem with the appliance, check in the following table for potential errors. Check the inside of the fridge temperature control panel (see page 10), and if the LED lights are flashing, check the table below for information as to the nature of this issue. Please contact our after sales support centre (see the bottom of the page) for advice, and provide them with the relevant error code.

Error Code	**Description**
E1 (LEDs i and j will flash - see Fig. 5, page 10)	Refrigerator temperature sensor fault.
E2 (LEDs e and j will flash - see Fig. 5, page 10)	Freezer temperature sensor fault.
E5 (LEDs h and j will flash - see Fig. 5, page 10)	Freezer frost sensor fault.
E6 (LEDs f and i will flash - see Fig. 5, page 10)	Communication failure.
E7 (LEDs f and j will flash - see Fig. 5, page 10)	Ring temperature fault.

Other Useful Information

WARNING!
To reduce the risk of electric shock or injury, always switch off the appliance and disconnect it from the power supply before cleaning or maintenance.

Cleaning the appliance

For hygienic reasons the appliance interior, including the interior accessories, should be cleaned regularly.

- Set both temperature controls to the minimum positions and unplug the appliance.
- Remove your frozen and refrigerated food packages from the compartments. Keep the food temporarily in another fridge or cooler bag to keep defrosting to a minimum.
- Remove all shelves and drawers. For shelves, lift and slide them forwards to carefully remove them. Lift the door trays upwards to detach them. The drawers also need to be lifted up slightly as they are slid out in order to remove them. The rollers at the base of the crisper drawers can be gently pulled out and cleaned if they are starting to stick in place.
- Wash the inside surfaces and the interior accessories with a damp, warm cloth moistened in a water and baking soda solution (about 2 tablespoons of baking soda to 1 litre of water). Wring excess water out of the cloth before cleaning around the temperature controls or any electrical parts. Rinse and wipe dry with a soft cloth.
- Clean the outside of the unit with a damp, well wrung out cloth.
- Keep the gaskets around the doors clean and free of debris.
- After everything is dry, reinstall the shelves and drawers and place the appliance back into service.

WARNING!

- Never clean the unit with an abrasive, acid, oil or solvent based cleaning agent, or with abrasive pads or scourers. Never use flammable fluids or sprays for cleaning as the fumes from these substances can create a fire hazard or explosion.
- Never clean the appliance with a steam cleaner. Moisture could accumulate in the electrical components, danger of electric shock! Hot vapours can lead to the damage of plastic parts.
- The appliance must be completely dry before it is placed back into service.
- Ethereal oils and organic solvents can attack plastic parts, e.g. lemon juice or the juice from orange peel, butyric acid, or cleansers that contain acetic acid. Do not allow such substances to come into contact with the appliance parts.

After Sales Support
☎ (AU) 1300 886 649 (NZ) 0800 836 761 | tempo.org/support

Other Useful Information (Cont.)

Door reversal

This appliance has the capability of opening the door from either the left or right side. If your set-up requires changing the opening direction, proceed as follow:

IMPORTANT!

You will need:

- Make sure you have someone there to help you, do not try to do this on your own.
- It will be necessary to tilt the unit back when taking the door off. You should rest the unit on something solid so that it will not slip during the door reversal process.
- Have some soft foam packaging or similar material (blanket or towel) ready to lay the appliance doors on. Do not lay the unit flat as this may damage the coolant system.
- Four installation hardware parts are supplied: a left hinge and hinge cover, a left middle stopper and a metal block for the left middle stopper. You will also need a straight and Phillips head screwdriver and a spanner (not supplied).

Before you begin:

- Unplug the appliance from the mains electricity supply (if connected).
- Empty all food and shelves out of the appliance (if applicable).
- Adjust the levelling legs to their highest level.

1. Remove the left cover plate and top right hinge cover. Then, using a Phillips head screwdriver, unscrew the screws and remove the top right hinge (Fig. 8). Keep the screws in a safe location for later.
2. Life the fridge door up and away from your refrigerator.

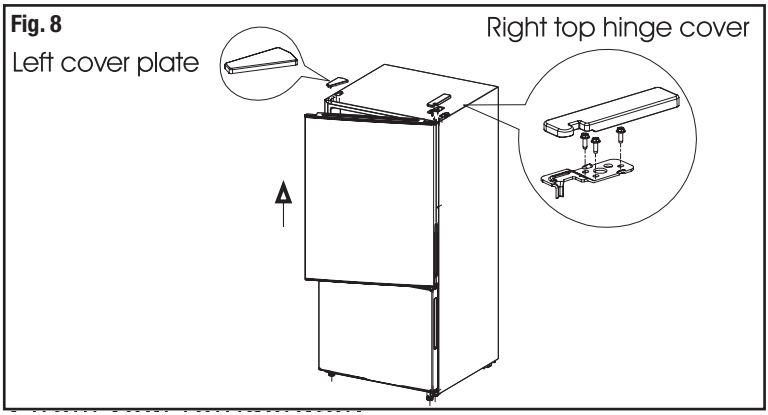

Other Useful Information (Cont.)

3. Unscrew the screws from the middle hinge. Remove the hinge, then lift the freezer door up and away from the refrigerator (Fig. 9). Keep the screws in a safe location for later.
4. Unscrew the screws from the bottom hinge, then remove the bottom hinge from the bottom right side of the refrigerator.
5. Unscrew the hinge shaft from the right side of the bottom hinge and move it to the left side, then secure the bottom hinge to the bottom left side of the refrigerator, using the same screws you have just removed (Fig. 10).

Fig. 9

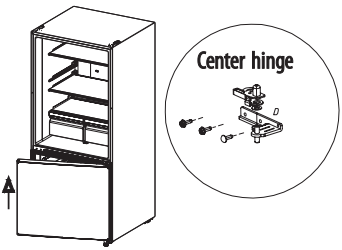

Fig. 10

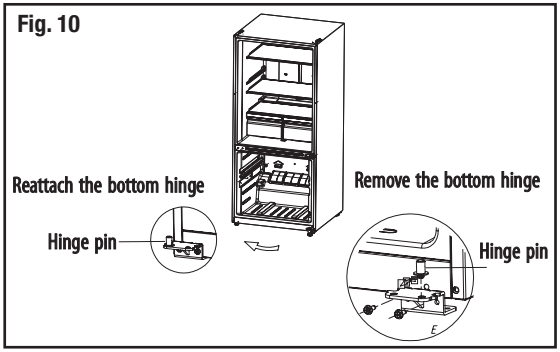

6. Dismantle the sleeves from the top right side of the doors and the hole caps from the top left of the doors. Attach the sleeves to the left and the hole caps to the right.
7. Remove the refrigerator door stopper and install it to the other side of the door. Remove the freezer door self-locking block and stopper, and set them aside for later. Take out the self-locking block and stopped from the accessory bag and attach it to the left of the door (Fig. 11).

Fig. 11

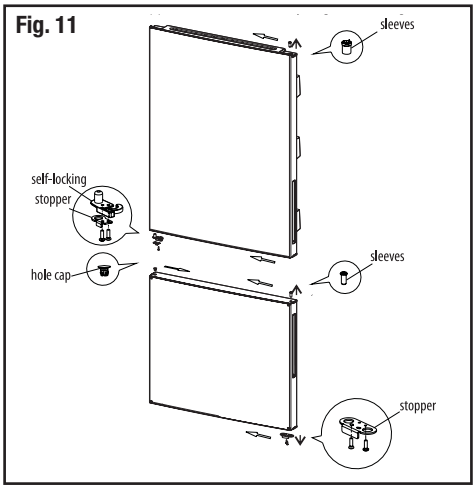

After Sales Support
☎ (AU) 1300 886 649 (NZ) 0800 836 761 | tempo.org/support

Other Useful Information (Cont.)

8. Put down the refrigerator door bottom hinge vertically, take out the middle hinge from the opposite side (from the accessory bag) and assemble it to the fridge (Fig. 12).

Fig. 12

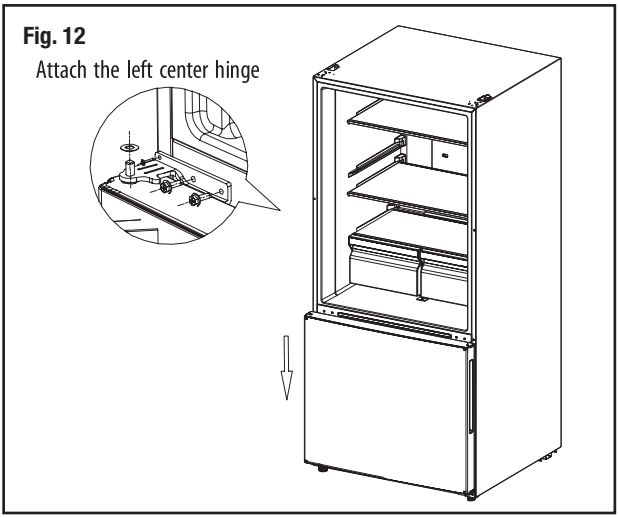

9. Put down the freezer door on the middle hinge vertically, then take out the top hinge and cover (from the other wise) and assemble the top hinge, hinge cover, and hole cover (Fig. 13).

Fig. 13

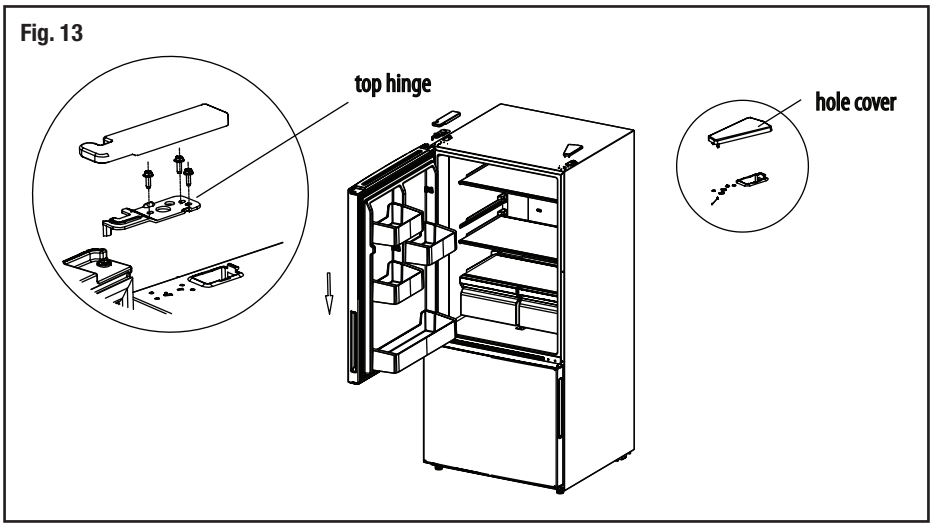

Other Useful Information (Cont.)

Defrosting the appliance

Manually defrosting the freezer compartment is not necessary as this is a frost-free appliance which will be defrosted automatically.

Storage

If the appliance is not going to be used for an extended period of time, please store the unplugged, cleaned appliance safely in the original packaging in a dry location, out of reach of children.

Service, repair and spare parts

Do not attempt to alter or modify this appliance in any way. Do not attempt to repair or replace any part of the appliance unless it is specifically recommended in this manual.

All other servicing should be referred to a qualified technician and only genuine spare parts must be used. Contact our after sales support centre for advice.

Our after sales support centre stocks spare parts for the appliance. To purchase a part, contact us at tempo.org/support or on 1300 886 649.

Other Useful Information (Cont.)

Technical specifications

Model	HV-RBM529
Rated voltage	220 – 240 V~
Rated frequency	50 Hz
Rated current	1.5 A
Climate category	T
Electrical protection class	I
Defrost power	200 W
Refrigerant	R600a (50 g)
Insulation blowing agent	Cyclopentane
Fridge compartment volume	370 L
Freezer compartment volume	159 L
Total volume	529 L
Dimensions (approx.)	1692 (H) x 785 (D) x 750 (W) mm
Net weight (approx.)	79 kg

T This marking indicates that the appliance is suitable for use in tropical climates under ambient temperatures of 18 °C to 43 °C.

Compliance

This product has been fully tested and meets all requirements as set out by standards AS/NZS 60335.1 and AS/NZS 60335.2.24.

The RCM Mark (Regulatory Compliance Mark) indicates that the product complies with the relevant guidelines of the ACMA as well as corresponding government requirements for the safety of electrical devices.

Other Useful Information (Cont.)

Responsible disposal

At the end of its working life, do not throw this appliance out with your household waste. Electrical and electronic products contain substances that can have a detrimental effect on the environment and human health if disposed of inappropriately. Observe any local regulations regarding the disposal of electrical consumer goods and dispose of it appropriately for recycling and recovery of the refrigerant and blowing agent.

WARNING! This refrigeration appliance contains flammable refrigerants and insulation blowing gases, which must be removed before disposal. Contact your municipal authorities for any codes or regulations concerning the disposal of such materials.

DANGER! Risk of child entrapment: When discarding this or another refrigerator, pull the plug out of the socket, cut the connection cable (as close to the appliance as you can) and remove the doors to prevent playing children to suffer electric shock or to get trapped inside the appliance. If the discarded appliance has a spring lock (latch) on the door or lid, make the spring lock unusable to prevent it from becoming a death trap for children.





Packaging materials are recyclable. Please dispose of them responsibly for recycling.

At the end of its working life, do not throw this appliance out with your household waste. Electrical and electronic products contain substances that can have a detrimental effect on the environment and human health if disposed of inappropriately. Observe any local regulations regarding the disposal of electrical consumer goods and dispose of it appropriately for recycling.

Contact your local authorities for advice on recycling facilities in your area. Or find recycling scheme services listed on Planet Ark's website at www.recyclingnearyou.com.au, or call Planet Ark on 1300 733 712.

After Sales Support
☎ (AU) 1300 886 649 (NZ) 0800 836 761 | 💻 tempo.org/support

This page has been left blank intentionally.

This page has been left blank intentionally.

After Sales Support
☎ (AU) 1300 886 649 (NZ) 0800 836 761 | 💻 tempo.org/support

This page has been left blank intentionally.

Warranty returns

Should you for any reason need to return this product for a warranty claim, make sure to include all accessories with the product.

Product does not work?

If you encounter problems with this product, or if it fails to perform to your expectations, make sure to contact our After Sales Support Centre on (AU) 1300 886 649 or (NZ) 0800 836 761 for advice.

For an electronic copy of this manual, please contact our after sales support centre.

Distributed by Tempo (Aust) Pty Ltd ABN 70 106 100 252
PO BOX 132 Frenchs Forest, Australia NSW 1640
Customer Helpline:
(AU) 1300 886 649 (NZ) 0800 836 761
Web Support: tempo.org/support

IM-V1.2 Issue: June 2022