Refrigerator

User manual

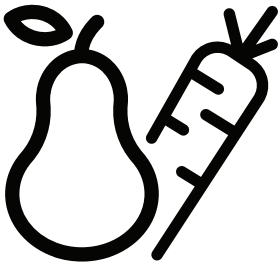

CNG3582VW - CNG3582VPS

EN /

58 7130 0000/AA

Please read these instructions first before using your appliance

Thank you for choosing a Beko appliance.

Please take some time to read this user manual before using your appliance, to ensure you know how to safely operate the controls and functions.

Carefully follow all unpacking and installation instructions to ensure the appliance is correctly connected and fitted prior to use.

Please write your product model and serial number on the last page of this user manual, and store in a safe location close to the appliance for easy future reference.

This user manual may also be applicable for several other models. Differences between models will be listed.

If you have any questions or concerns, please call our contact centre or find help and information online at www.beko.co.uk

Symbols and their descriptions

This instruction manual contains the following symbols:

ⓘ Important information or useful usage tips.

⚠ Warning against dangerous conditions for life and property.

⚠ Warning against electric voltage.

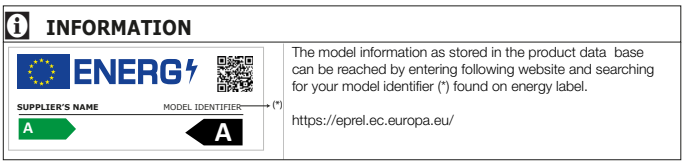

1 Your refrigerator 4

2 Warnings 5

Electrical requirements....6
Warning! This appliance must be earthed....6
Energy saving tips....7
Compliance with WEEE Directive and Disposing of the Waste Product: 8
Compliance with rohs directive: 8
Package information....8

3 Installation 9

Points to be paid attention to when the relocation of the refrigerator 9
Electrical connection 10
Disposing of the packaging....10
Disposing of your old refrigerator 10
Placing and Installation....11
Changing the illumination lamp 11
Adjusting the legs....11

4 Preparation 12

Reversing the doors....13

5 Using your refrigerator 14

6 Maintenance and cleaning 17

Protection of plastic surfaces 17

7 Troubleshooting 18

1 Your refrigerator

Congratulations on your choice a **Beko** quality Appliance which has been designed to give you service for many years.

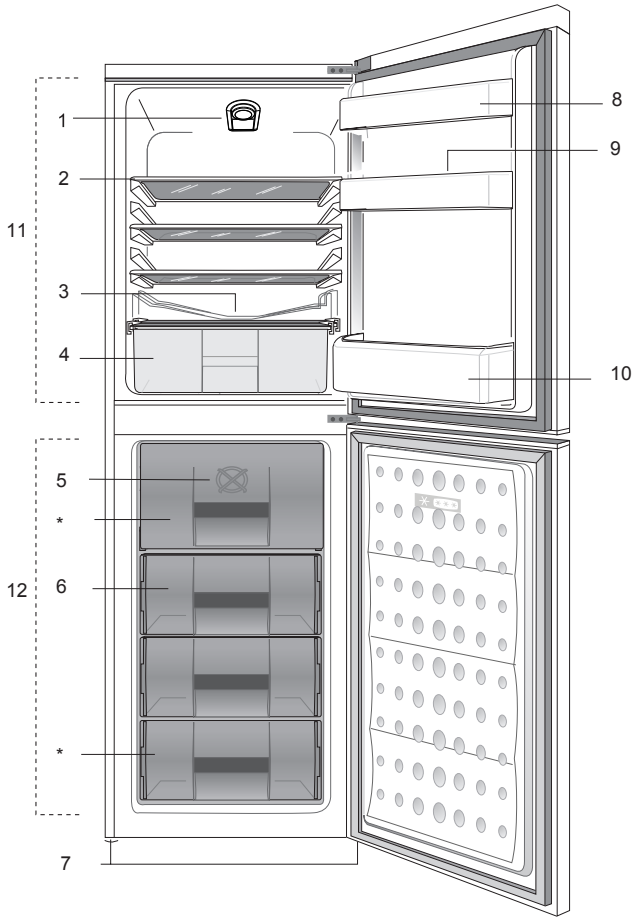

1. Temperature setting control
2. Cabinet shelves
3. Defrost water collection channel
4. Salad crisper
5. Freezer fan
6. Frozen food storage drawers
7. Adjustable feet
8. Dairy compartment
9. Egg tray
10. Door shelves
11. Fridge compartment
12. Freezer compartment

Figures that take place in this instruction manual are schematic and may not correspond exactly with your product. If the subject parts are not included in the product you have purchased, then it is valid for other models.

2 Warnings

- Do not connect your appliance to the electricity supply until all packing and transit protectors have been removed.
- If transported horizontally leave to stand upright for at least 4 hours before switching on to allow compressor oil to settle
- If you are discarding an old refrigerator with a lock or latch fitted to the door, disable the lock/latch, ensure that it is left in a safe condition to prevent the entrapment of young children.
- This fridge/freezer must only be used for its intended purpose i.e the storing and freezing of edible foodstuff.
- Do not dispose of the appliance on a fire. At **Beko**, the care and protection of our environment is an ongoing commitment. This appliance which is among the latest range introduced is particularly environment friendly. Your appliance contains non CFC / HFC natural substances in the cooling system (Called R600a) and in the insulation (Called cyclopentane) which are potentially flammable if exposed to fire. Therefore, take care not to damage, the cooling circuit / pipes of the appliance in transportation and in use. In case of damage do not expose the appliance to fire or potential ignition source and immediately ventilate the room where the appliance is situated.
- We suggest you contact your local authority for disposal information and facilities available.
- To obtain the best possible performance and trouble free operation from your appliance it is very important to carefully read these instructions.
- On delivery, check to make sure that the product is not damaged and that all the parts and accessories are in perfect condition.
- Ensure that the plug remains readily accessible. Do not use multiple adapter or extension cable.
- Failure to observe these instructions may invalidate your right to free service during the guarantee period.
- Keep ventilation openings, in the appliance enclosure or in the built-in structure, clear of obstruction.
- Do not damage the refrigerant circuit.
- Do not use electrical appliances inside the food storage compartments of the appliance, unless they are of the type recommended by the manufacturer.

- We suggest you keep these instructions in a safe place for easy reference.
- This appliance can be used by children aged from 8 years and above and persons with reduced physical, sensory or mental capabilities or lack of experience and knowledge if they have been given supervision or instruction concerning use of the appliance in a safe way and understand the hazards involved. Children shall not play with the appliance. Cleaning and user maintenance shall not be made by children without supervision.
- Children should be supervised to ensure that they do not play with the appliance.

Electrical requirements

Before you insert the plug into the wall socket make sure that the voltage and the frequency shown on the rating plate inside the appliance corresponds to your electricity supply.

Rating label is on the left hand side of fridge inner liner.

We recommend that this appliance be connected to the mains supply via a suitable switched and fused socket. The appliance must be positioned so that the plug is accessible.

WARNING:

When positioning the appliance ensure the supply cord is not trapped or damaged.

Should the mains lead of the appliance become damaged or should it need replacing at any time, it must be replaced by a special purpose made mains lead which can only be obtained from a **Beko** authorised service agent.

Warning! This appliance must be earthed

If the fitted moulded plug is not suitable for your socket, then the plug should be cut off and an appropriate plug fitted. Destroy the old plug which is cut off as a plug with bared cord could cause a shock hazard if inserted into a socket elsewhere in the house.

The moulded plug on this appliance incorporates a 13 A fuse. Should the fuse need to be replaced an ASTABEAB approved BS 1362 fuse of the same rating must be used. Do not forget to refit the fuse cover. In the event of losing the fuse cover the plug must not be used until a replacement fuse cover has been fitted.

Colour of the replacement fuse cover must be the same colour as that visible on the pin face of the plug. Fuse covers are available from any good electrical store.

Important! Fitting A Different Plug

1. As the colours of the wires in the mains lead of this appliance may not correspond with the coloured markings identifying the terminals in your plug proceed as follows: (See diagram).
2. Connect the green-yellow or green (Earth) wire to the terminal in the plug marked 'E' or with the symbol ⏚ or coloured green and yellow or green.
3. Connect the blue (Neutral) wire to the terminal in the plug marked 'N' or coloured black.
4. Connect the brown (Live) wire to the terminal in the plug marked 'L' or coloured red.
5. With alternative plugs a 13 A fuse must be fitted either in the plug or adaptor or in the main fuse box. If in doubt contact a qualified electrician.

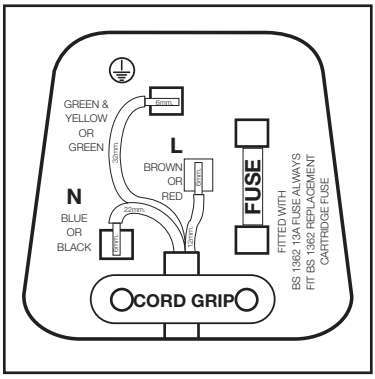

Energy saving tips

1. Ensure your appliance is installed in a well ventilated area.
2. Ensure the time between buying chilled/frozen food and placing them in your appliance is kept at minimum, particularly in summer. We recommend you use a cool bag or a special carrier bag to carry perishable food.
3. Do not leave the door (s) of your appliance open longer than necessary and ensure they are closed properly after each opening.
4. Defrost frozen food in the fridge compartment, so that frozen food acts as an ice pack to assist cooling in the fridge.
5. Energy consumption of this appliance is measured while freezer compartment is loaded without use of top shelf lid and the drawers except the bottom drawer. It is advised that freezer compartment is loaded without use of drawers except the bottom drawer in order to achieve maximum loading capacity.

Compliance with WEEE Directive and Disposing of the Waste Product:

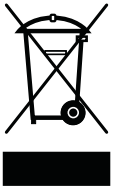

This product complies with EU WEEE Directive (2012/19/EU). This product bears a classification symbol for waste electrical and electronic equipment (WEEE).This product has been manufactured with high quality parts and materials which can be reused and are suitable for recycling. Do not dispose of the waste product with normal domestic and other wastes at the end of its service life. Take it to the collection center for the recycling of electrical and electronic equipment. Please consult your local authorities to learn about these collection centers.

Compliance with rohs directive:

The product you have purchased complies with EU RoHS Directive (2011/65/EU). It does not contain harmful and prohibited materials specified in the Directive.

Package information

Packaging materials of the product are manufactured from recyclable materials in accordance with our National Environment Regulations. Do not dispose of the packaging materials together with the domestic or other wastes. Take them to the packaging material collection points designated by the local authorities.

3 Installation

⚠ Please remember that the manufacturer shall not be held liable if the information given in the instruction manual is not observed.

Points to be paid attention to when the relocation of the refrigerator

1. Your refrigerator should be unplugged.Before transportation of your refrigerator, it should be emptied and cleaned.

2. Before it is re-packaged, shelves, accessories, crisper, etc. inside your refrigerator should be fixed with adhesive tape and secured against impacts. Package should be bound with a thick tape or sound ropes and the transportation rules on the package should be strictly observed.

3. Original packaging and foam materials should be kept for future transportations or moving.

Check the following before you start to use your refrigerator:

1. Attach 2 plastic wedges as illustrated below. Plastic wedges are intended to keep the distance which will ensure the air circulation between your refrigerator and the wall. (The picture is drawn up as a representation and it is not identical with your product.)

2. Clean the interior of the refrigerator as recommended in the "Maintenance and cleaning" section.

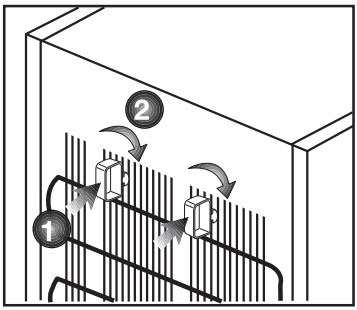

The condenser of your appliance is located on the back as shown below. In order to achieve better energy efficiency with lower energy consumption, please pull the condenser towards yourself as illustrated in picture below.

***may not be available in all models**

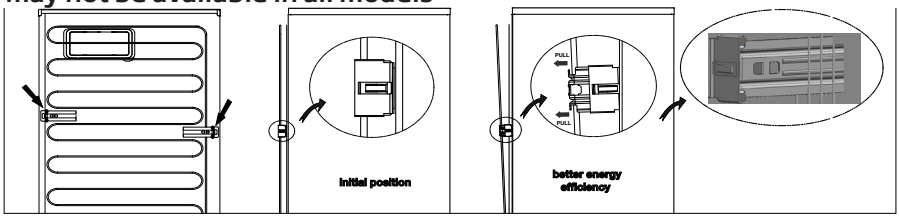

3. Connect the plug of the refrigerator to the wall socket. When the fridge door is opened, fridge internal lamp will turn on.

4. When the compressor starts to operate, a sound will be heard. The liquid and gases sealed within the refrigeration system may also give rise to noise, even if the compressor is not running and this is quite normal.

5. Front edges of the refrigerator may feel warm. This is normal. These areas are designed to be warm to avoid condensation.

6. Your product requires adequate air circulation to function efficiently. If the product will be placed in an alcove, remember to leave at least 5 cm clearance between the product and the ceiling, rear wall and the side walls.

7. If the product will be placed in an alcove, remember to leave at least 5 cm clearance between the product and the ceiling, rear wall and the side walls. Check if the rear wall clearance protection component is present at its location (if provided with the product). If the component is not available, or if it is lost or fallen, position the product so that at least 5 cm clearance shall be left between the rear surface of the product and the wall of the room. The clearance at the rear is important for efficient operation of the product.

Electrical connection

Connect your product to a grounded socket which is being protected by a fuse with the appropriate capacity.

Important:

The connection must be in compliance with national regulations.

- The power plug must be easily accessible after installation.
- Electrical safety of your refrigerator shall be guaranteed only if the earth system in your house complies with standards.
- The voltage stated on the label located at left inner side of your product should be equal to your network voltage.
- Extension cables and multi plugs must not be used for connection.

⚠ A damaged power cable must be replaced by a qualified electrician.

⚠ Product must not be operated before it is repaired! There is the risk of electric shock!

Disposing of the packaging

The packing materials may be dangerous for children. Keep the packing materials out of the reach of children or dispose of them by classifying them in accordance with the waste instructions stated by your local authorities. Do not throw away with regular house waste, throw away on packaging pick up spots designated by the local authorities.

The packing of your refrigerator is produced from recyclable materials.

Disposing of your old refrigerator

Dispose of your old refrigerator without giving any harm to the environment.

- You may consult your authorized dealer or waste collection center of your municipality about the disposal of your refrigerator.

Before disposing of your refrigerator, cut out the electric plug and, if there are any locks on the door, make them inoperable in order to protect children against any danger.

Placing and Installation

If the entrance door of the room where the refrigerator will be installed is not wide enough for the refrigerator to pass through, then carefully remove the doors of your refrigerator and pass it sideways through the door.

1. Install your refrigerator to a place that allows ease of use.

2. Keep your refrigerator away from heat sources, humid places and direct sunlight.

3. There must be appropriate air ventilation around your refrigerator in order to achieve an efficient operation. If the refrigerator is to be placed in a recess in the wall, there must be at least 5 cm distance with the ceiling and at least 5 cm with the wall. Do not place your product on the materials such as rug or carpet.

4. Place your refrigerator on an even floor surface to prevent jolts.

Important: Care must be taken while cleaning / carrying the appliance to avoid touching the bottom of the condenser metal wires at the back of the appliance as you might injure your fingers and hands.

Important: This appliance is not designed for stacking with any other appliance. When positioning your appliance, take care not to damage your flooring, pipes,wall coverings etc.

Important: Make sure that mains cable is not caught under the appliance during and after carrying / moving the appliance, to avoid the mains cable becoming cut or damaged

Beko declines to accept any liability should the instructions not be followed.

Changing the illumination lamp

To change the Bulb/LED used for illumination of your refrigerator, call your AuthorisedService.

The lamp(s) used in this appliance is not suitable for household room illumination. The intended purpose of this lamp is to assist the user to place foodstuffs in the refrigerator/ freezer in a safe and comfortable way.The lamps used in this appliance have to withstand extreme physical conditions such as temperatures below -20 °C.

(only chest and upright freezer)

Adjusting the legs

If your refrigerator is unbalanced;

You can balance your refrigerator by turning its front legs as illustrated in the figure. The corner where the leg exists is lowered when you turn in the direction of black arrow and raised when you turn in the opposite direction. Taking help from someone to slightly lift the refrigerator will facilitate this process.

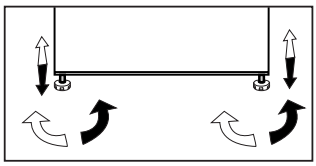

4 Preparation

- For a freestanding appliance; 'this refrigerating appliance is not intended to be used as a built-in appliance.
- Your refrigerator should be installed at least 30 cm away from heat sources such as hobs, ovens, central heater and stoves and at least 5 cm away from electrical ovens and should not be located under direct sunlight.
- This appliance is equipped with 'Freezer Guard' which ensures that at the advised setting [4 - four on the control] the frozen food in the freezer will not defrost even if the ambient temperature falls as low as -15 °C. So you may then install your appliance in a garage or an unheated room without having to worry about frozen food in the freezer being spoilt. However at low ambient temperatures mentioned above,fridge contents are likely to freeze,so check and consume food in the fridge accordingly. When the ambient temperature returns to normal, you may change the setting to suit your needs.
- Please make sure that the interior of your refrigerator is cleaned thoroughly.
- If two refrigerators are to be installed side by side, there should be at least 2 cm distance between them.
- When you operate your refrigerator for the first time, please observe the following instructions during the initial six hours.
- The door should not be opened frequently.
- It must be operated empty without any food in it.
- Do not unplug your refrigerator. If a power failure occurs out of your control, please see the warnings in the "Recommended solutions for the problems" section.
- Original packaging and foam materials should be kept for future transportations or moving.
- The baskets/drawers that are provided with the chill compartment must always be in use for low energy consumption and for better storage conditions.
- Food contact with the temperature sensor in the freezer compartment may increase energy consumption of the appliance. Thus any contact with the sensor(s) must be avoided.
- In some models, the instrument panel automatically turns off 5 minutes after the door has closed. It will be reactivated when the door has opened or pressed on any key.
- Due to temperature change as a result of opening/closing the product door during operation, condensation on the door/body shelves and the glass containers is normal.
- Since hot and humid air will not directly penetrate into your product when the doors are not opened, your product will optimize itself in conditions sufficient to protect your food. Functions and components such as compressor, fan, heater, defrost, lighting, display and so on will operate according to the needs to consume minimum energy under these circumstances.

Reversing the doors

Proceed in numerical order

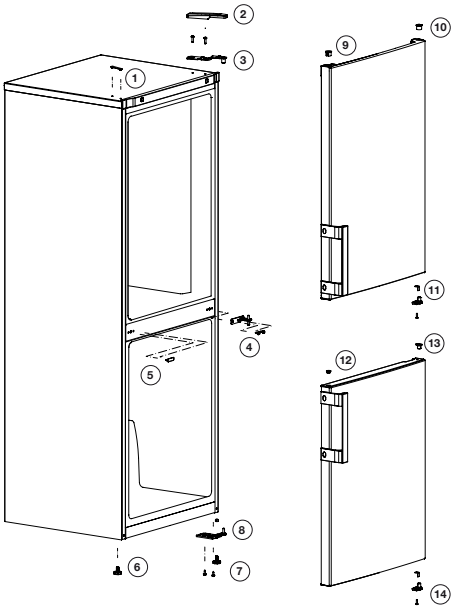

Scan to watch video showing how to reverse doors.

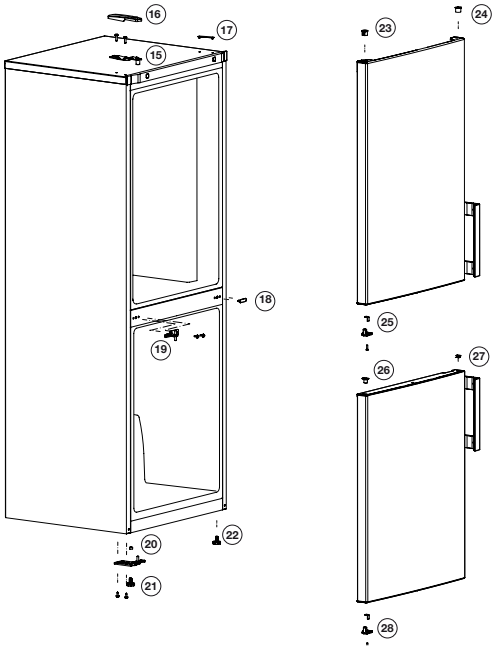

5 Using your refrigerator

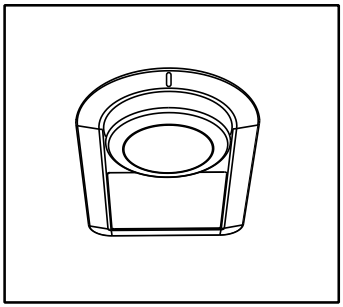

The operating temperature is regulated by the temperature control.

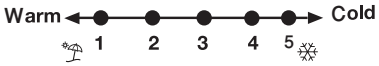

1=Lowest cooling setting (Warmest setting).

4=Highest cooling setting (Coldest setting).

The average temperature inside the fridge should be around +5°C.

Please choose the setting according to the desired temperature.

Please note that there will be different temperatures in the cooling area.

The coldest region is immediately above the vegetable compartment.

The interior temperature also depends on ambient temperature, the frequency with which the door is opened and the amount of foods kept inside.

Frequently opening the door causes the interior temperature to rise.

For this reason, it is recommended to close the door again as soon as possible after use.

5.1. Thermostat setting button

The interior temperature of your refrigerator changes for the following reasons;

- Seasonal temperatures,
- Frequent opening of the door and leaving the door open for long periods,
- Food put into the refrigerator without cooling down to the room temperature,
- The location of the refrigerator in the room (e.g. exposing to sunlight).
- You may adjust the varying interior temperature due to such reasons by using the thermostat. Numbers around the thermostat button indicates the cooling degrees.
- If the ambient temperature is higher than 32°C, turn the thermostat button to maximum position.
- If the ambient temperature is lower than 25°C, turn the thermostat button to minimum position.

5.2. Defrost

Fridge compartment

Fridge compartment performs full-automatic defrosting. Water drops and a frosting up to 7-8 mm can occur on the inner rear wall of the fridge compartment while your refrigerator cools down. Such formation is normal as a result of the cooling system. The frost formation is defrosted by performing automatic defrosting with certain intervals thanks to the automatic defrosting system of the rear wall. User is not required to scrape the frost or remove the water drops.

Water resulting from the defrosting passes from the water collection groove and flows into the evaporator through the drain pipe and evaporates here by itself.

Deep freezer compartment does not perform automatic defrosting in order to prevent decaying of the frozen food.

The freezer compartment defrosts automatically.

Check regularly to see if the drain pipe is clogged or not and clear it with the stick in the hole when necessary.

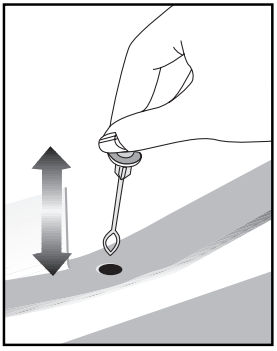

5.3. Freezing fresh food

- It must be preferred to wrap or cover the food before placing them in the refrigerator.
- Hot food must cool down to the room temperature before putting them in the refrigerator.
- The foodstuff that you want to freeze must be fresh and in good quality.
- Foodstuff must be divided into portions according to the family's daily or meal based consumption needs.
- The foodstuff must be packaged in an airtight manner to prevent them from drying even if they are going to be kept for a short time.
- Materials to be used for packaging must be tear-proof and resistant to cold, humidity, odor, oils and acids and they must also be airtight. Moreover, they must be well closed and they must be made from easy-to-use materials that are suitable for deep freeze usage.
- Frozen food must be used immediately after they are thawed and they should never be re-frozen.
- Please observe the following instructions to obtain the best results.

1. Do not freeze too large quantities of food at one time. The quality of the food is best preserved when it is frozen right through to the core as quickly as possible.

2. Placing warm food into the freezer compartment causes the cooling system to operate continuously until the food is frozen solid.

3. Take special care not to mix already frozen food and fresh food.

5.4. Recommendations for preservation of frozen food

- Prepacked commercially frozen food should be stored in accordance with the frozen food manufacturer's instructions for a ******** (4 star) frozen food storage compartment.
- To ensure that the high quality achieved by the frozen food manufacturer and the food retailer is maintained, the following should be remembered:

1. Put packages in the freezer as quickly as possible after purchase.

2. Ensure that contents are labeled and dated.

3. Do not exceed "Use By", "Best Before" dates on the packaging.

Defrosting

The freezer compartment defrosts automatically.

5.5. Placing the food

Freezer compartment shelves	Various frozen food such as meat, fish, ice cream, vegetables and etc.
Egg tray	Egg
Fridge compartment shelves	Food in pans, covered plates and closed containers
Fridge compartment door shelves	Small and packaged food or drinks (such as milk, fruit juice and beer)
Crisper	Vegetables and fruits
Freshzone compartment	Delicatessen products (cheese, butter, salami and etc.)

5.6. Deep-freeze information

Food must be frozen as rapidly as possible when they are put in a refrigerator in order to keep them in good quality.

It is possible to keep the food for a long time only at -18°C or lower temperatures.

You can keep the freshness of food for many months (at -18°C or lower temperatures in the deep freeze).

WARNING! ⚠

- Foodstuff must be divided into portions according to the family's daily or meal based consumption needs.
- Foodstuff must be packaged in an airtight manner to prevent them from drying even if they are going to be kept for a short time.
- Materials necessary for packaging:
- Cold resistant adhesive tape
- Self adhesive label
- Rubber rings
- Pen

Materials to be used for packaging the foodstuff must be tear-proof and resistant to cold, humidity, odor, oils and acids.

Foodstuff to be frozen should not be allowed to come in contact with the previously frozen items to prevent their partial thawing.

Frozen food must be used immediately after they are thawed and they should never be re-frozen.

6 Maintenance and cleaning

⚠ Never use gasoline, benzene or similar substances for cleaning purposes.

⚠ We recommend that you unplug the appliance before cleaning.

⚠ Never use any sharp abrasive instrument, soap, household cleaner, detergent and wax polish for cleaning.

ⓘ Use lukewarm water to clean the cabinet of your refrigerator and wipe it dry.

ⓘ Use a damp cloth wrung out in a solution of one teaspoon of bicarbonate of soda to one pint of water to clean the interior and wipe it dry.

⚠ Make sure that no water enters the lamp housing and other electrical items.

⚠ If your refrigerator is not going to be used for a long period of time, unplug the power cable, remove all food, clean it and leave the door ajar.

ⓘ Check door seals regularly to ensure they are clean and free from food particles.

⚠ To remove door racks, remove all the contents and then simply push the door rack upwards from the base.

⚠ Never use cleaning agents or water that contain chlorine to clean the outer surfaces and chromium coated parts of the product. Chlorine causes corrosion on such metal surfaces.

⚠ Do not use sharp, abrasive tools, soap, household cleaning agents, detergents, kerosene, fuel oil, varnish etc. to prevent removal and deformation of the prints on the plastic part. Use lukewarm water and a soft cloth for cleaning and then wipe it dry.

Protection of plastic surfaces

ⓘ Do not put the liquid oils or oil-cooked meals in your refrigerator in unsealed containers as they damage the plastic surfaces of your refrigerator. In case of spilling or smearing oil on the plastic surfaces, clean and rinse the relevant part of the surface at once with warm water.

7 Troubleshooting

Check this list before contacting the service. Doing so will save you time and money. This list includes frequent complaints that are not related to faulty workmanship or materials. Certain features mentioned herein may not apply to your product.

The refrigerator is not working.

- The power plug is not fully settled. > > > Plug it in to settle completely into the socket.
- The fuse connected to the socket powering the product or the main fuse is blown. > > > Check the fuses.

Condensation on the side wall of the cooler compartment (MULTI ZONE, COOL, CONTROL and FLEXI ZONE).

- The door is opened too frequently > > > Take care not to open the product's door too frequently.
- The environment is too humid. > > > Do not install the product in humid environments.
- Foods containing liquids are kept in unsealed holders. > > > Keep the foods containing liquids in sealed holders.
- The product's door is left open. > > > Do not keep the product's door open for long periods.
- The thermostat is set to too low temperature. > > > Set the thermostat to appropriate temperature.

Compressor is not working.

- In case of sudden power failure or pulling the power plug off and putting back on, the gas pressure in the product's cooling system is not balanced, which triggers the compressor thermic safeguard. The product will restart after approximately 6 minutes. If the product does not restart after this period, contact the service.
- Defrosting is active. > > > This is normal for a fully-automatic defrosting product. The defrosting is carried out periodically.
- The product is not plugged in. > > > Make sure the power cord is plugged in.
- The temperature setting is incorrect. > > > Select the appropriate temperature setting.
- The power is out. > > > The product will continue to operate normally once the power is restored.

The refrigerator's operating noise is increasing while in use.

- The product's operating performance may vary depending on the ambient temperature variations. This is normal and not a malfunction.

The refrigerator runs too often or for too long.

- The new product may be larger than the previous one. Larger products will run for longer periods.
- The room temperature may be high. > > > The product will normally run for long periods in higher room temperature.
- The product may have been recently plugged in or a new food item is placed inside. > > > The product will take longer to reach the set

temperature when recently plugged in or a new food item is placed inside. This is normal.

- Large quantities of hot food may have been recently placed into the product. > > > Do not place hot food into the product.
- The doors were opened frequently or kept open for long periods. > > > The warm air moving inside will cause the product to run longer. Do not open the doors too frequently.
- The freezer or cooler door may be ajar. > > > Check that the doors are fully closed.
- The product may be set to temperature too low. > > > Set the temperature to a higher degree and wait for the product to reach the adjusted temperature.
- The cooler or freezer door washer may be dirty, worn out, broken or not properly settled. > > > Clean or replace the washer. Damaged / torn door washer will cause the product to run for longer periods to preserve the current temperature.

The freezer temperature is very low, but the cooler temperature is adequate.

- The freezer compartment temperature is set to a very low degree. > > > Set the freezer compartment temperature to a higher degree and check again.

The cooler temperature is very low, but the freezer temperature is adequate.

- The cooler compartment temperature is set to a very low degree. > > > Set the freezer compartment temperature to a higher degree and check again.

The food items kept in cooler compartment drawers are frozen.

- The cooler compartment temperature is set to a very low degree. > > > Set the freezer compartment temperature to a higher degree and check again.

The temperature in the cooler or the freezer is too high.

- The cooler compartment temperature is set to a very high degree. > > > Temperature setting of the cooler compartment has an effect on the temperature in the freezer compartment. Wait until the temperature of relevant parts reach the sufficient level by changing the temperature of cooler or freezer compartments.
- The doors were opened frequently or kept open for long periods. > > > Do not open the doors too frequently.
- The door may be ajar. > > > Fully close the door.
- The product may have been recently plugged in or a new food item is placed inside. > > > This is normal. The product will take longer to reach the set temperature when recently plugged in or a new food item is placed inside.
- Large quantities of hot food may have been recently placed into the product. > > > Do not place hot food into the product.

Shaking or noise.

- The ground is not level or durable. > > > If the product is shaking when moved slowly, adjust the stands to balance the product. Also make sure the ground is sufficiently durable to bear the product.

- Any items placed on the product may cause noise. > > > Remove any items placed on the product.

The product is making noise of liquid flowing, spraying etc.

- The product's operating principles involve liquid and gas flows. > > > This is normal and not a malfunction.

There is sound of wind blowing coming from the product.

- The product uses a fan for the cooling process. This is normal and not a malfunction.

There is condensation on the product's internal walls.

- Hot or humid weather will increase icing and condensation. This is normal and not a malfunction.
- The doors were opened frequently or kept open for long periods. > > > Do not open the doors too frequently; if open, close the door.
- The door may be ajar. > > > Fully close the door.

There is condensation on the product's exterior or between the doors.

- The ambient weather may be humid, this is quite normal in humid weather. > > > The condensation will dissipate when the humidity is reduced.

The interior smells bad.

- The product is not cleaned regularly. > > > Clean the interior regularly using sponge, warm water and carbonated water.
- Certain holders and packaging materials may cause odour. > > > Use holders and packaging materials without free of odour.
- The foods were placed in unsealed holders. > > > Keep the foods in sealed holders. Micro-organisms may spread out of unsealed food items and cause malodour. Remove any expired or spoilt foods from the product.

The door is not closing.

- Food packages may be blocking the door. > > > Relocate any items blocking the doors.
- The product is not standing in full upright position on the ground. > > > Adjust the stands to balance the product.
- The ground is not level or durable. > > > Make sure the ground is level and sufficiently durable to bear the product.

The vegetable bin is jammed.

- The food items may be in contact with the upper section of the drawer. > > > Reorganize the food items in the drawer.

If The Surface Of The Product Is Hot.

- High temperatures may be observed between the two doors, on the side panels and at the rear grill while the product is operating. This is normal and does not require service maintenance!Be careful when touching these areas.

⚠ **WARNING:**

If the problem persists after following the instructions in this section, contact your vendor or an Authorised Service. Do not try to repair the product.

BEKO UK AND IRELAND STANDARD MANUFACTURER GUARANTEE TERMS AND CONDITIONS

Your new Beko product is guaranteed against faulty materials, defective components or manufacturing defects.

The standard guarantee starts from the date of original purchase of the product, and lasts for a period of twelve (12) months unless Beko plc (the "Manufacturer") agrees to extend the guarantee for the product in writing.

If you have purchased an American style Fridge freezer, the standard guarantee starts from the date of original purchase of the product, and lasts for a period of twenty four (24) months unless Beko plc (the "Manufacturer") agrees to extend the guarantee for the product in writing.

If you have any questions about the guarantee on your product (including how long it is valid), please contact your retailer or our contact centre on **0333 207 971**(UK and Northern Ireland) or **01 862 3411** (Republic of Ireland)

This guarantee does not in any way diminish or affect your statutory rights in connection with the product. This guarantee is in addition to your statutory rights as a consumer. If you have any questions about these rights, please contact the retailer from which you purchased the product. In certain circumstances, it is possible that your statutory rights may offer additional or higher levels of protection than those offered under the terms of this guarantee.

What is covered by this guarantee?

- Repairs to the product required as a result of faulty materials, defective components or manufacturing defects.
- Functional replacement parts to repair a product.
- The costs of a Beko Approved Engineer to carry out the repair.

What is not covered?

- Transit and delivery damage.
- Cabinet or appearance parts, including but not limited to control knobs, flaps and handles.
- Accessories and/or consumable items including but not limited to ice trays, scrapers, cutlery baskets, filters and light bulbs.
- Repairs necessary as a direct or indirect result of:
  - Accidental damage, misuse or abuse of a product.
  - An attempted repair of a product by anyone other than a Beko Approved Engineer (the "Engineer").

- Installation or use of a product where such installation or use fails to meet the requirements contained in this guarantee or the User Instructions Booklet.

- Repairs to a product operated at any time on commercial or non-residential household premises (unless we have previously agreed to the installation environment).

This guarantee is limited to the cost of repairing the product. To the extent permitted by law, the Manufacturer does not accept and will not be held liable for any financial loss incurred in connection with the failure of any product to operate in accordance with the expected standards. Such financial loss includes but is not limited to loss arising from:

- Time taken off work.
- Damaged food, clothing or other items.
- Meals taken at restaurants or from takeaways.
- General compensation for inconvenience.

Important Notes

1. Your product is designed and built for domestic household use only.

2. The guarantee will automatically be void if the product is installed or is used in commercial or non-residential domestic household premises, unless we have previously agreed to the installation environment.

3. The product must be correctly installed, located and operated in accordance with the instructions contained in the User Instructions Booklet provided with your product.

4. Professional installation by a qualified Electrical Domestic Appliance Installer is recommended for all Washing Machines, Dishwashers and Electric Cookers (as incorrect installation may result in you having to pay for the cost of repairing the product).

5. Gas Cookers must be professionally installed by a Gas Safe (or Gas Networks Ireland for Republic of Ireland) registered gas installer.

6. This guarantee is given in respect of products purchased and used within the United Kingdom and the Republic of Ireland.

7. This guarantee is effective from the initial date of purchase of a new product from an authorised retailer and will be void if the product is resold.

8. This guarantee does not apply to graded sales (where the product is purchased as a "second").

9. Possession of a copy of these terms and conditions does not necessarily mean that a product has the benefit of this guarantee. If you have any questions, please call our Call Centre on the number set out above.

10. The Manufacturer reserves the right to terminate the guarantee if its staff or representatives are subjected to physical or verbal abuse in the course of carrying out their duties.

11. Optional extras, where available (i.e. extendable feet) are supplied on a chargeable basis only.

Does Beko offer replacements?

This is a repair-only guarantee. On occasion, the Manufacturer may at its sole discretion, replace your product with a new product instead of carrying out a repair. Where a replacement is offered, this would normally be an identical model but when this is not possible, a model of similar specification will be provided. The Manufacturer will cover the costs and arrange for the delivery of the new product and for the return of the old product. Any costs related to disconnecting the faulty product and installing the replacement product will not be borne by the Manufacturer unless previously agreed to in writing. The original guarantee will continue to apply to the replacement product; the new product will not come with a new guarantee.

When will the repair take place?

Our Engineers work Monday to Friday 9.00am to 5.00pm. Appointments outside these hours may be possible at the sole discretion of the Manufacturer but cannot be guaranteed. Whilst our Engineers will endeavour to minimize inconvenience and to meet requests for specific timed appointments, this cannot be guaranteed. We will not be liable for delays or if it is unable to carry out a repair because a convenient appointment cannot be arranged.

Will there be any charge for the repairs?

It is your responsibility to provide evidence to the Engineer that your product is covered by this guarantee with a proof of purchase. The Manufacturer reserves the right to charge for the reasonable cost of any service call if:

- You cannot provide evidence that your product is covered by this guarantee.
- Where a service call has been made and the engineer finds that there is no fault with your product.
- That your product has not been installed or operated in accordance with the User Instructions Booklet.
- That the fault was caused by something other than faulty materials, defective components or manufacturing defects.
- For missed appointments.

Payment of these costs are due immediately upon the Engineer providing you with an invoice. The Manufacturer reserves the right to terminate the guarantee if you fail to pay the costs for the service call in a timely manner.

If you are a resident of the United Kingdom, this guarantee will be governed by English law and subject to the English Courts, save where you live in another part of the United Kingdom, in which case the law and courts of that location will apply.

If you are resident in the Republic of Ireland, this guarantee will be governed by Irish law and the Irish courts will have jurisdiction.

This guarantee is provided by Beko plc. Beko House, 1 Greenhill Crescent, Watford, Hertfordshire. WD18 8QU.

Beko plc is registered in England and Wales with company registration number 02415578

BEKO UK AND IRELAND BUILT-IN APPLIANCES GUARANTEE TERMS AND CONDITIONS

If you have purchased a built-in or integrated appliance, and registered it within 90 days of purchase by completing the online registration form, then the standard 12 month guarantee will be extended to 24 months, under the same terms and conditions as detailed in our Standard Guarantee Terms and Conditions.

HOW TO OBTAIN SERVICE FOR YOUR APPLIANCE

Please keep your purchase receipt or other proof of purchase details in a safe place; you will need to have this documentation available should the product require attention under guarantee.

Please take a few moments to complete the details below, as you will need this information when you call us, or to use our online services. When you call us you may be required to input your serial number into your telephone keypad. For help please visit beko.co.uk/support/model-finder

- The product model number is printed on the Operating Instruction Booklet / User guide
- The product model and serial number is printed on the Rating Label affixed to the appliance.
- The Retailer (Purchased from) and Date of purchase will be printed on your purchase receipt or other proof of purchase paperwork

Recording of these details alone will not count as proof of purchase. A valid proof of purchase is required for requesting service under guarantee.

Model number	Serial number	Purchased from	Date of purchase

For service under guarantee or for product advice please call our Contact centre

Before requesting service please check the troubleshooting guide in the Operating Instructions booklet, as a charge may be levied where no fault is found, and even though your product may still be under guarantee.

After arranging service the area around the product must be easily accessible to the Engineer, without the need for cabinets or furniture to be removed or moved.

It is your responsibility to ensure our Engineers have a clean and safe environment to carry out any repairs.

Please have your Model number and Serial number available when you call us, as you may be required to input your serial number into your telephone keypad during your call.

UK Mainland & Northern Ireland:

0333 207 9710

Landline or mobile calls to 0333 numbers cost no more than calls to geographic numbers 01 or 02, and are charged at the basic rate. Calls from landlines and mobiles are included in free call packages but please check with your telephone service provider for exact call charges.

Republic of Ireland:

01 862 3411

Service once the manufacturers guarantee has expired

If you have purchased an extended guarantee please refer to the instructions contained within the extended guarantee agreement document, otherwise please call us using the appropriate number above, where service can be obtained at a charge.

Should you experience any difficulty in obtaining service please call us on **0333 207 9710** or **01 862 3411**

Contact us though our website

Send us a secure message through our online contact us form. Please visit our website, click Contact Us and choose a product support topic from the list of options. Complete the required details and click send message.

Product registrations

For UK registrations please visit beko.co.uk/register and for the Republic of Ireland visit beko.ie/register.

DISCLAIMER / WARNING

Some (simple) failures can be adequately handled by the end-user without any safety issue or unsafe use arising, provided that they are carried out within the limits and in accordance with the following instructions (see the "Self-Repair" section).

Therefore, unless otherwise authorized in the "Self-Repair" section below, repairs shall be addressed to registered professional repairers in order to avoid safety issues. A registered professional repairer is a professional repairer that has been granted access to the instructions and spare parts list of this product by the manufacturer according to the methods described in legislative acts pursuant to Directive 2009/125/EC. **However, only the service agent (i.e. authorized professional repairers) that you can reach through the phone number given in the user manual/ warranty card or through your authorized dealer may provide service under the guarantee terms. Therefore, please be advised that repairs by professional repairers (who are not authorized by Beko) shall void the guarantee.**

Self-Repair

Self-repair can be done by the end-user with regard to the following spare parts: door handles,door hinges, trays, baskets and door gaskets (an updated list is also available in support.beko.com as of 1st March 2021).

Moreover, to ensure product safety and to prevent risk of serious injury, the mentioned self-repair shall be done following the instructions in the user manual for self-repair or which are available in support.beko.com. For your safety, unplug the product before attempting any self-repair.

Repair and repair attempts by end-users for parts not included in such list and/or not following the instructions in the user manuals for self-repair or which are available in support.beko.com, might give raise to safety issues not attributable to Beko, and will void the warranty of the product.

Therefore, it is highly recommended that end-users refrain from the attempt to carry out repairs falling outside the mentioned list of spare parts, contacting in such cases authorized professional repairers or registered professional repairers. On the contrary, such attempts by end-users may cause safety issues and damage the product and subsequently cause fire, flood, electrocution and serious personal injury to occur.

By way of example, but not limited to, the following repairs must be addressed to authorized professional repairers or registered professional repairers: compressor, cooling circuit, main board,inverter board, display board, etc.

The manufacturer/seller cannot be held liable in any case where end-users do not comply with the above.

The spare part availability of the refrigerator that you purchased is 10 years.

During this period, original spare parts will be available to operate the refrigerator properly

The minimum duration of guarantee of the refrigerator that you purchased is 12 months.

This product is equipped with a lighting source of the "G" energy class.

The lighting source in this product shall only be replaced by professional repairers.