Service Manual

Gas/Electric Refrigerators

MODELS

N500

N510

WARNING

DO NOT install this refrigerator in below deck marine applications. Do not install this refrigerator in fixed indoor cabin or other dwelling applications. This refrigerator must use only NORCOLD designed and approved outside air intake and exhaust ventilation for correct and safe operation. Any other ventilation could cause lethal combustion exhaust fumes and or/explosive propane gas fumes to be in the living area and/or below deck.

© 2004 THETFORD/NORCOLD. All rights reserved.

Publication No. 626800A (06-08-04)

TABLE OF CONTENTS

Introduction ---------- 1
About this Manual 1
Model Identification 1
Information Label 1
Cooling Unit Serial Number 1
Certification and Code Requirements 1
About Installation 1
Replacement Parts 1
Technical Assistance 1

Safety Awareness ---------- 3
Safety Notice 3
Attention Statements 3
Safety Statements 3

Specifications ---------- 4
N500 Models 4
N510 Models 5

Troubleshooting - Quick Reference Guide ---------- 6

N510 Displayed Fault Codes ---------- 7

Troubleshooting Flowcharts - N500 Units ---------- 8
Burner Will Not Maintain Flame - N500 Units 8
No AC Operation - N500 Units 9
No DC Operation - N500.3 (3-Way Units Only) 10
No LP Operation - N500 Units 11
Thermocouple and Interrupter Malfunctioning 12

Troubleshooting Flowchart - N510 Units ---------- 13
Blank Display - Refrigerator does not turn on - N510 13
Optical Display Does Not Turn On - Power is available ... 14
F Fault Code - Burner failed to ignite or reignite - N510 ... 15
E Fault Code - DC voltage high - N510 16
C Fault Code - DC voltage low - N510 16
S Fault Code - Flame sense circuit failure - N510 17
A Fault Code - No ac power available - N510 17
H Fault Code - AC heater failed open - N510 18
r Fault Code - AC relay stuck closed - N510 18
Backup Operating System - N510 Models 19
Thermistor Failure Fault - Controls in Backup Operating System Mode - N510 19
Power Board Resetting Procedure 20
N Fault Code - No cooling detected by the controls 20

Ventilation ---------- 21
Roof Exhaust Venting 21
Air Intake Vent 21
Roof Exhaust Vent 21
Baffles 21
Vertical Angled Baffles 21
Double Sidewall Venting 22
Air Intake Vent 22
Sidewall Exhaust Vent 22
Components 23
Manual Shutoff Valve 23
Orifice 23

LP Gas System - N500 ---------- 23
Gas Safety Valve 24
Gas Safety Valve Replacement 24

LP Gas System - N510 ---------- 25
Components 25
Solenoid Gas Valve 25
Orifice 25

LP Gas System - ALL MODELS ---------- 26
Components Continued - All Models 26
Burner 26
Flue Tube 26
Flue Cap 26
Flue Baffle 26
Handling of LP Gas Lines and Fittings 26
LP Gas Pressure 27
Testing for Gas Leakage 27
Method A: 27
Method B: 27
Bubble leak test solution/soap and water leak test: 27
Pressure drop test: 27
Burner Cleaning Procedure 28

Electrical Requirements and Components ---------- 29
AC Heater 29
AC Fuse 29
AC Power 29
AC Power Requirements - All Models 29
DC Power 29
DC Power Requirements 29
N500 (2-way models) 29
N510 (2-way models) 29
N500.3/N510.3 (3-way models) 29
DC Heater - N500.3/N510.3 29
Relighter - N500/N500.3 29
DC Heater–3-Way Refrigerators Only 30
2-Way Model Wiring 30
3-Way Model Wiring 30
DC Heater Circuit Fuse 30
Replacing AC or DC Heater 30
AC Power Cord 31
N500 AC Power Cord 31
N510 AC Power Cord 31
N500 Terminal Block 31
AC/DC Converter as Power Source - 31
N510 Only 31

Cooling Unit ---------- 32
Description 32
Heat Absorption 32
Leveled Operation 32
Gradual Decrease in Cooling Efficiency 32
Cooling Monitoring - N510 Units Only 32
Second "n" Fault Code 33
Cooling Monitoring Control Operation 33
First "n" Fault Code 33
Refrigerant Leakage - All Models 33
Disposal of Cooling Unit - All Models 33
Cooling System Diagnostic Flowchart 34
Removing the Refrigerator from the Enclosure 36
Replacing the Cooling Unit 36
Removal of Cooling Unit 37
Installation of Replacement Cooling Unit. 39
Installation of Refrigerator into Enclosure 40

Electronic Components - All Models ---------- 41
Spark/sense Electrode - All Models 41
Replacing Spark/sense Electrode 41

Electronic Components - N500 Models ---------- 42
Relighter - N500 Models 43
Replacing Relighter 43
Flame Indicator - N500 Models 43
Flame Indicator Replacement 43

Electronic Components - N510 Models ---------- 43
Power Board - N510 Models 43
Removal–Power Board 43
Installation–Power Board 43

Controls ---------- 44
N500 Controls 44
Replacing Selector Switch - N500 45
N510 Controls 46

Replacing Optical Control Circuit Board - N510 47
AUTO Mode - All N510 Units 48
AUTO Mode – N510.3 (3-way units) 48
AUTO AC Operation 48
AUTO LP Gas Operation 48
N510 Modes of Operation 48
Troubleshooting a "F" and "A" Faults 48
Shift from AUTO LP Gas to AUTO AC - 2-ways 48
No AC Power and No Flame 48
AUTO DC Operation – 3-Way Units Only 49
AC Manual Mode 49
No AC Power or Loss of AC Power 49
Troubleshooting an "A" Fault 49
AC Power Restored 49
LP Gas Manual Mode 50
Flame Fails to Ignite or Flame Goes Out 50
Clearing "Gas Lock-Out" 50
Troubleshooting an "F" Fault 50
DC Manual Mode: 3-Way Units Only 50
Troubleshooting a DC Fault 50

N510 Diagnostic Mode ---------- 51
Diagnostic Mode 51
Accessing the Diagnostic Mode 51
Changing Screens 51
Exiting the Diagnostic Mode 51
Screens and Diagnostic Segments Information 52

Wiring Pictorials and Diagrams ---------- 54

About this Manual

This service manual provides maintenance, diagnostic, and repair information for **NORCOLD**® model N500/N510 gas absorption refrigerators. It is a reference tool designed for technicians who are knowledgeable in the theory and operation of gas/electric absorption refrigerators, liquefied petroleum (LP) gas–propane–systems, and ac/dc electrical systems as installed in a variety of recreational vehicles (RV).

All information, illustrations, and specifications contained in this publication are based on the latest product information available at the time of publication. **NORCOLD**® reserves the right to make changes at any time without notice.

Model Identification

Models N500 and N510 are 2-way refrigerators that can operate on ac power or LP gas. The electronic controls operate on 12 Vdc.

Models N500.3 and N510.3 are 3-way refrigerators that can operate on ac power, LP gas, or dc power. The electronic controls operate on 12 Vdc.

Information Label

The information label is located in the upper right corner of the fresh food compartment just below the freezer compartment. See Figure 1, page 2. The label provides the following information:

- Serial number.
- Model number.
- LP gas (propane) pressure.
- Btu/hr.
- AC voltage and amperage.
- DC voltage and amperage.
- Design certification.
- Vent kit requirement.

Cooling Unit Serial Number

The cooling unit has a separate serial number that appears on the cooling unit bar code label. The label is affixed to the surface of the cooling unit leveling chamber. See Figure 2, page 2.

Certification and Code Requirements

NORCOLD® N500/N510 gas/electric absorption refrigerators are certified under the latest edition of *ANSI Z21.19B* standards for installation in mobile homes or recreational vehicles. **NORCOLD**® N500/N510 gas/electric absorption refrigerators are also certified with the Canadian Standards Association, *CAN/CGA-1.4-M94.*

Electrical components are UL compliant.

About Installation

Refrigerator installation must conform with the *N500/N510 Installation Manual* (part number 622265) for the **NORCOLD**® limited warranty to be in effect. Installation must also comply with applicable local codes and standards set by the cognizant certification agency.

Replacement Parts

Use only authorized **NORCOLD**® replacement parts. Generic parts do not meet **NORCOLD**® specifications for safety, reliability, and performance. The use of unauthorized aftermarket or generic replacement parts voids the refrigerator's limited warranty coverage.

Technical Assistance

If technical issues are unable to be resolved using the information provided in this manual, technical support for service technicians is available through the **NORCOLD**® Customer Service Center:

☎ Telephone: ..... 1-800-444-7210.

🖷 Fax: ..... 1-937-497-3183.

World Wide Web: ..... www.norcold.com/cda.

The following information is required to process technical support requests:

- Model number.
- Serial number.
- Make, model, and year of recreational vehicle.

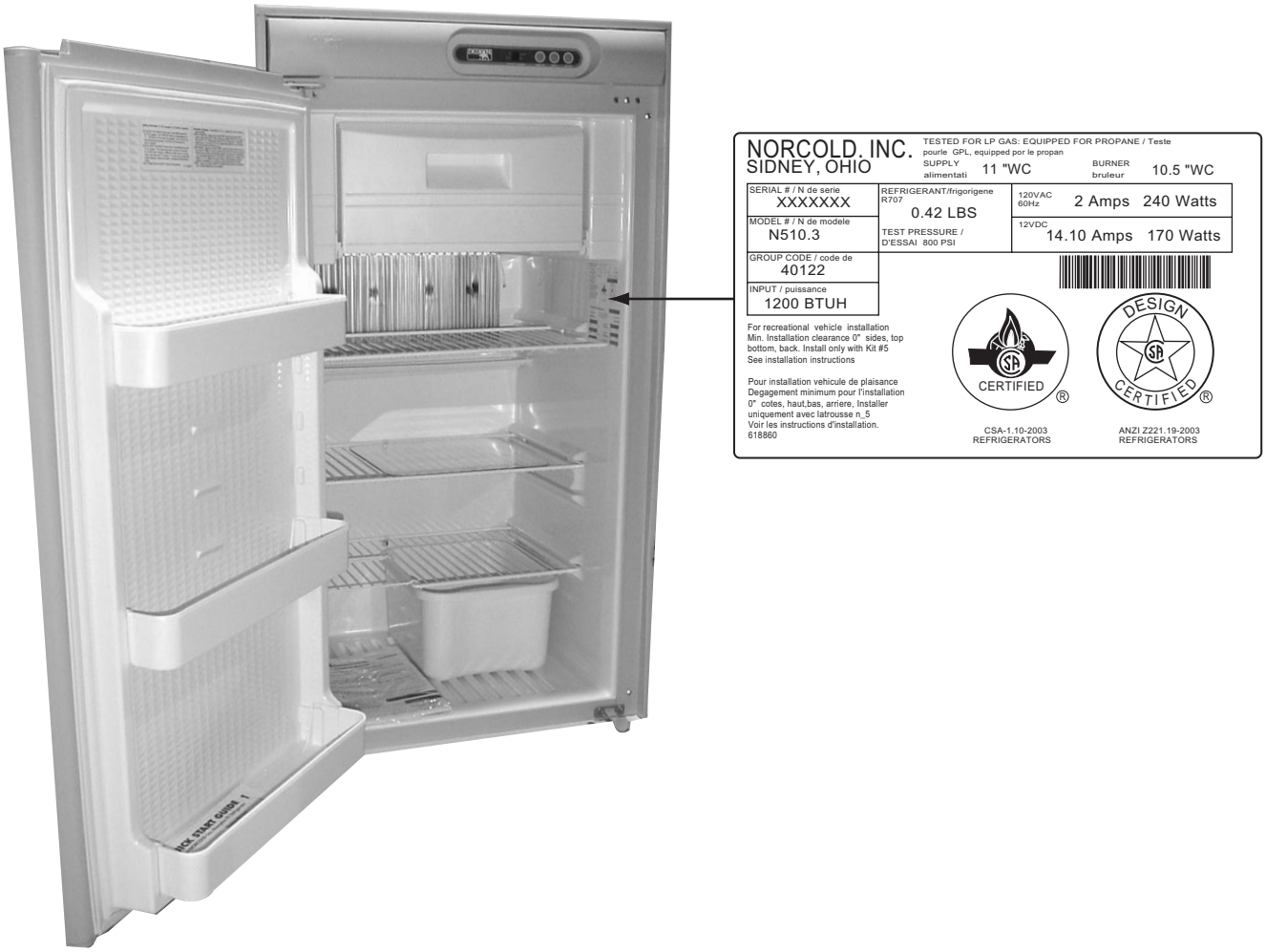

Figure 1. Information label location



Figure 2. Cooling unit label location

SAFETY AWARENESS

Safety Notice

It is not possible to anticipate all of the conceivable ways or conditions under which the refrigerator may be serviced or to provide cautions as to all of the possible hazards that may result. Standard and accepted safety precautions and equipment should be used when working on electrical circuits and handling toxic or flammable materials. Safety goggles and other required protection should be used during any process that can cause material to become airborne, such as removing a leaking cooling unit and cleaning components.

Attention Statements

The safety alert symbol ⚠ followed by the word ***WARNING*** or ***CAUTION*** identifies potential safety hazards or conditions.

The safety alert symbol with the appropriate heading appears on all safety labels posted on the refrigerator and safety awareness notices presented throughout this manual.

> ⚠ ***WARNING:***
> The above heading identifies hazards or conditions, which if ignored can cause serious injury, death, and/ or extensive property damage.

> ⚠ ***CAUTION:***
> The above heading identifies hazards, which if ignored can cause injury and/or property damage.

Safety Statements

⚠ **Do not** modify, alter, or equip the refrigerator to the use of any other fuel (natural gas, butane, etc.). N500/N510 refrigerators are designed and equipped for the use of LP gas–*propane gas*–only.

⚠ Incorrect installation, adjustment, alteration, or maintenance of the refrigerator can cause personal injury, property damage, or both.

⚠ **Do not** smoke, light fires, or create sparks when working on the propane gas system.

⚠ **Do not** use an open flame for leak testing any of the propane gas system components. Propane gas is highly flammable and explosive.

⚠ Always use two wrenches to tighten or loosen LP gas connections. Damaged connections, piping, and components create the potential for gas leaks.

⚠ All electrical connections and repairs to the refrigerator must comply with all applicable codes. Refer to the certification and code requirements section of the *N500/ N510 Installation Manual* for more information.

⚠ **Do not** work on live electrical circuits. Turn off ac power and dc power sources before attempting to remove, service, or repair any of the refrigerator's electrical or electronic components.

⚠ **Do not** modify, bypass, or eliminate any of the refrigerator's electrical components, electronic circuits, or propane gas system components.

⚠ **Do not** wet or spray liquids on or near electrical connections or electronic components. Most liquids, including leak detection solutions, are electrically conductive and pose the potential for an electric shock hazard, short electrical components, damage electronic circuits, and/or ignite a fire.

⚠ **Do not** use leak test solutions that contain ammonia or chlorine. Ammonia and chlorine degrade copper and brass components.

⚠ **The cooling unit is a sealed system under pressure! Do not** try to repair or recharge the cooling unit. **Do not** bend, drop, weld, drill, puncture, saw, or strike the cooling unit.

⚠ **Handle a leaking cooling unit with extreme caution!** The cooling unit contains ammonia, hydrogen, and sodium chromate. Ammonia can cause severe skin and eye burns. Hydrogen is highly flammable, can ignite, and burns with an intense flame. Certain chromium compounds, such as sodium chromate, are carcinogenic.

⚠ **Do not** use extension cords. **Do not** remove the grounding prong from the refrigerator ac power cord. **Do not** use a two prong adapter to connect the refrigerator to the ac outlet.

⚠ **Do not** over-fuse electrical circuits. Use specified fuses and AWG wire sizes. The "Specifications" section of this manual provides fuse size information. Refer to the *N500/N510 Installation Manual* for the correct AWG wire size specifications.

⚠ **Prevent child entrapment!** Before disposing of the refrigerator, remove all doors and fasten all shelves with retainers.

⚠ Some of the refrigerator's metal components have sharp corners and edges. Wear hand protection, such as cut-resistant gloves, and exercise extreme care when handling the refrigerator.

⚠ Make sure all hardware, such as hinges and fasteners (retaining screws, etc.), is properly fastened.

SPECIFICATIONS

N500 Models

Storage volume
N500 ---------- 5.5 ft^3.

Rough opening dimensions (H x W x D)
N500 ---------- 42 5/8 in. x 23 11/16 in. x 24 in.

Decorative panels dimensions
Thickness ---------- 3/16 in.
Door panel dimensions (H x W) ---------- 31 in. x 21 5/16 in.

Controls
Type ---------- Top mounted
Temperature settings ---------- 1=cold, 5=coldest
Temperature sensor ---------- Capillary tube

Off-level operating limits
Side-to-side ---------- 3 degrees maximum
Front-to-back ---------- 6 degrees maximum

DC power
Ignition circuit operating voltage ---------- 10.5 to 15.4 Vdc
Relighter ---------- 1.3 amp type 3AG
DC operation voltage (3-way models only) ---------- 12 Vdc to 15 Vdc
DC heater rating (3-way models only) ---------- 10.7 amps @12 Vdc (resistance is 1.3 ohms)

DC amp draws (at nominal 12 Vdc)
Automatic ignition ---------- 0.50 A

AC power
AC heater operating voltage ---------- 108 to 132 Vac
AC heater circuit fuse ---------- 5A, 1/4 in. x 1 1/4 in. AGC type fast acting, inline
AC heater rating ---------- 200 W @ 110 Vac (resistance of 61.3 ohms)

LP gas (propane)
Operating pressure ---------- 10.5 to 11.5 in. w.c.
Heat input ---------- 1200 Btu/h @ 11 in. w.c.
Orifice ---------- LP10
Gas ignition ---------- 12 Vdc ignition module
Electrode-to-burner air gap ---------- 3/16 in.

N510 Models

Storage volume
N510 ---------- 5.5 ft^3.

Rough opening dimensions (H x W x D)
N510 ---------- 42 5/8 in. x 23 11/16 in. x 24 in.

Decorative panels dimensions
Thickness ---------- 3/16 in.
Door panel dimensions (H x W) ---------- 31 in. x 21 5/16 in.

Controls
Type ---------- Electronic with built-in diagnostic function
ON/OFF/MODE/TEMP SET switches ---------- Flush pushbutton style
Temperature settings ---------- 1=cold, 5=coldest
Temperature sensor ---------- Thermistor, fin-mounted on 5th fin

Off-level operating limits
Side-to-side ---------- 3 degrees maximum
Front-to-back ---------- 6 degrees maximum

DC power
Controls operating voltage ---------- 10.5 to 15.4 Vdc
Controls DC fuse (F2 in power board) ---------- 3 A type 3AG
DC operation voltage (3-way models only) ---------- 12 Vdc to 15 Vdc
DC heater rating (3-way models only) ---------- 10.7 amps @12 Vdc (resistance is 1.3 ohms)

DC amp draws (at nominal 12 Vdc)
Automatic ignition ---------- 0.50 A
Gas valve ---------- 0.146 A

AC power
AC heater operating voltage requirements ---------- 108 to 132 Vac
Fuse ac heater circuit (F3 in power board) ---------- 5 A, 1/4 in. x 1 1/4 in. AGC type fast acting
AC heater rating ---------- 200 W @ 110 Vac (resistance of 61.3 ohms)

LP gas (propane)
Operating pressure ---------- 10.5 to 11.5 in. w.c.
Heat input ---------- 1200 Btu/h @ 11 in. w.c.
Orifice ---------- LP10

Gas ignition ---------- Automatic with flame-sensing circuit
Electrode-to-burner air gap ---------- 3/16 in.

TROUBLESHOOTING - QUICK REFERENCE GUIDE

Problem	Possible Cause	Checks/Reference
The refrigerator does not turn ON.	No 12 Vdc power to refrigerator. Faulty/loose 12 Vdc connections. F1 fuse in power board open.	See page 13 (N510). Check 12 Vdc connections. Check fuse (N510).
The refrigerator does not cool on ac power.	No ac power to refrigerator. F3 fuse or ac heater inline fuse open. AC heater failed open.	See page 9 (N500). Check fuse. Check heater resistance and continuity.
The refrigerator does not cool efficiently on ac power.	Ventilation obstructed. AC voltage low.	Check enclosure for air flow obstructions. Check ac voltage input.
3-Way Units Only The refrigerator does not cool on dc power.	F2 fuse or dc heater inline fuse open. DC heater failed open.	Check fuse. Check heater resistance and continuity.
3-Way Units Only The refrigerator does not cool efficiently on dc power.	Ventilation obstructed. DC voltage below 12 volts.	Check enclosure for obstructed air flow. Check dc power input.
The refrigerator does not operate on LP gas.	No LP gas. Incorrect electrode-to-burner gap. Faulty spark/sense electrode assembly. Flame sensing circuit failure.	Check LP gas supply and valves. Set electrode to 3/16 in. Replace spark/sense electrode. See page 41. Replace power board (N510). See page 43.
The refrigerator does not cool efficiently on LP gas.	Ventilation obstructed. Incorrect LP gas pressure. Dirty burner. Missing flue baffle. Flue cap blocked.	Check enclosure for obstructed air flow. Set gas pressure to 10.5 to 11.5 in. w.c. Clean burner. See page 28. Replace flue baffle. See page 26. Clear flue cap. See page 26.
Poor or no cooling.	Poor ventilation. Off-level operation. Dirty burner. Low ac voltage. Cooling fan inoperative (if present). Improper installation. Incorrect orifice.	Check enclosure for obstructed air flow. Level unit. See page 32. Clean burner. See page 28. Check ac voltage input. Test fan operation. Check installation. See pages 21 and 22 and *N500/N510 Installation Manual.* Install correct orifice (LP10).

N510 DISPLAYED FAULT CODES

Code	Probable Cause	Reference
Blank Display Screen	Refrigerator turned off. No 12 Vdc to refrigerator. F1 fuse open.	See pages 13 and 14.
	Burner failed to ignite or reignite.	See page 15.
	Flame sense circuit failure.	See page 17.
	DC voltage low.	See page 16.
	DC voltage high.	See page 16.
	AC relay stuck closed.	See page 18.
	No ac power available to refrigerator. AC cord not plugged into power board. F3 fuse open.	See page 17.
	AC heater failed open.	See page 18.
Flashing Temp Setting	Backup operating system in operation.	See page 19.
	No cooling detected by the controls.	See pages 20 and 32.

Burner Will Not Maintain Flame - N500 Units

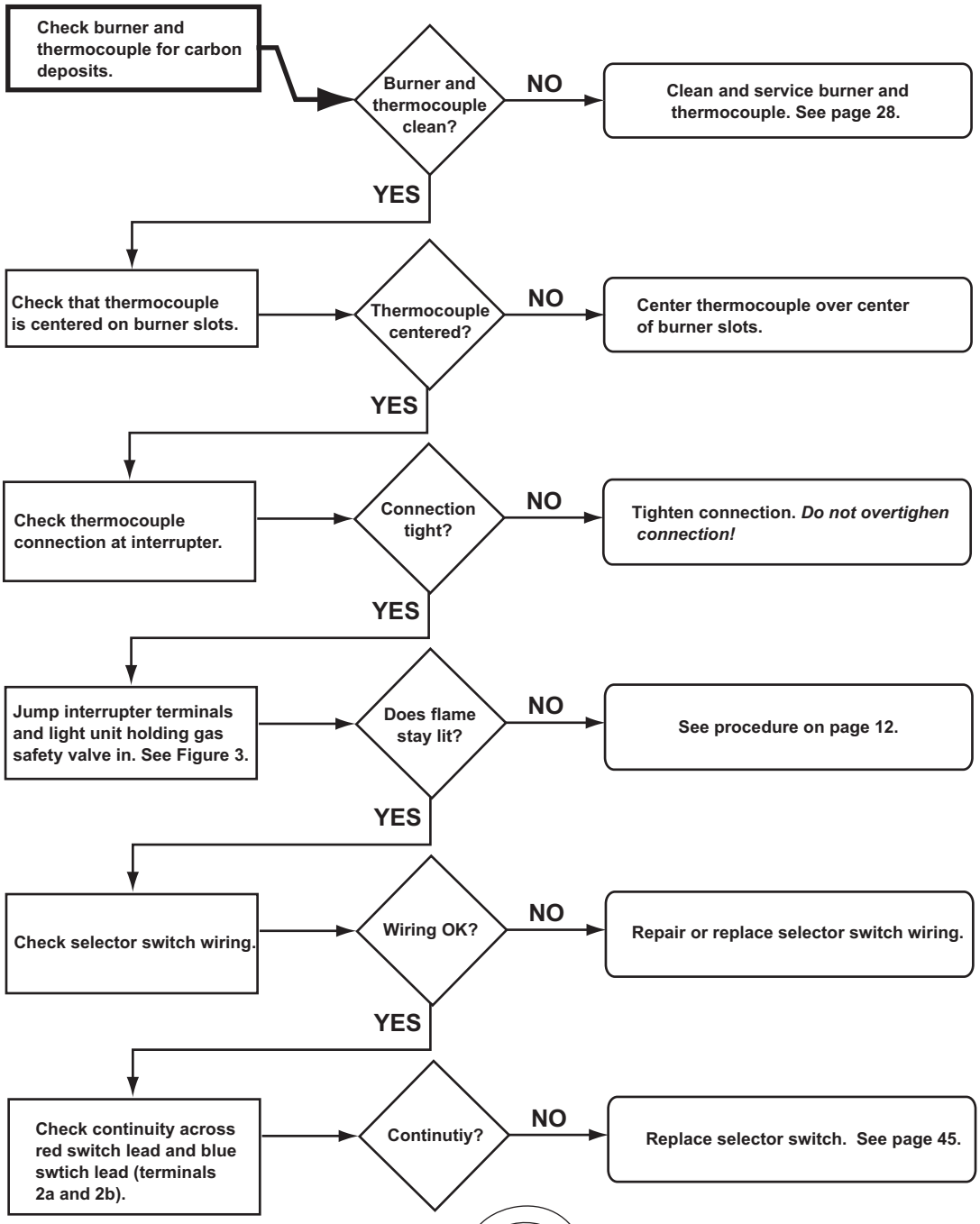

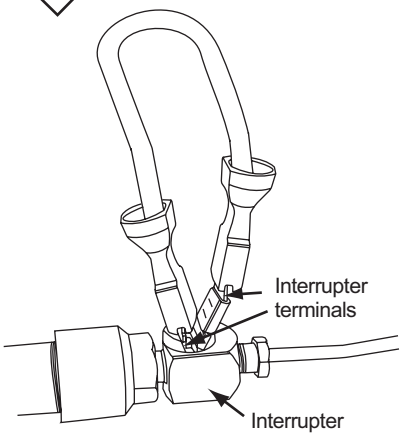

Figure 3. Jumping interrupter terminals

No AC Operation - N500 Units

Before beginning this procedure make sure:

- The refrigerator is receiving 108 (minimum) to 132 (maximum) Vac from a grounded receptacle.
- Fuse holder and 3 amp fuse are in good condition.
- Selector knob is set to "AC."
- Thermostat knob is set to 5.

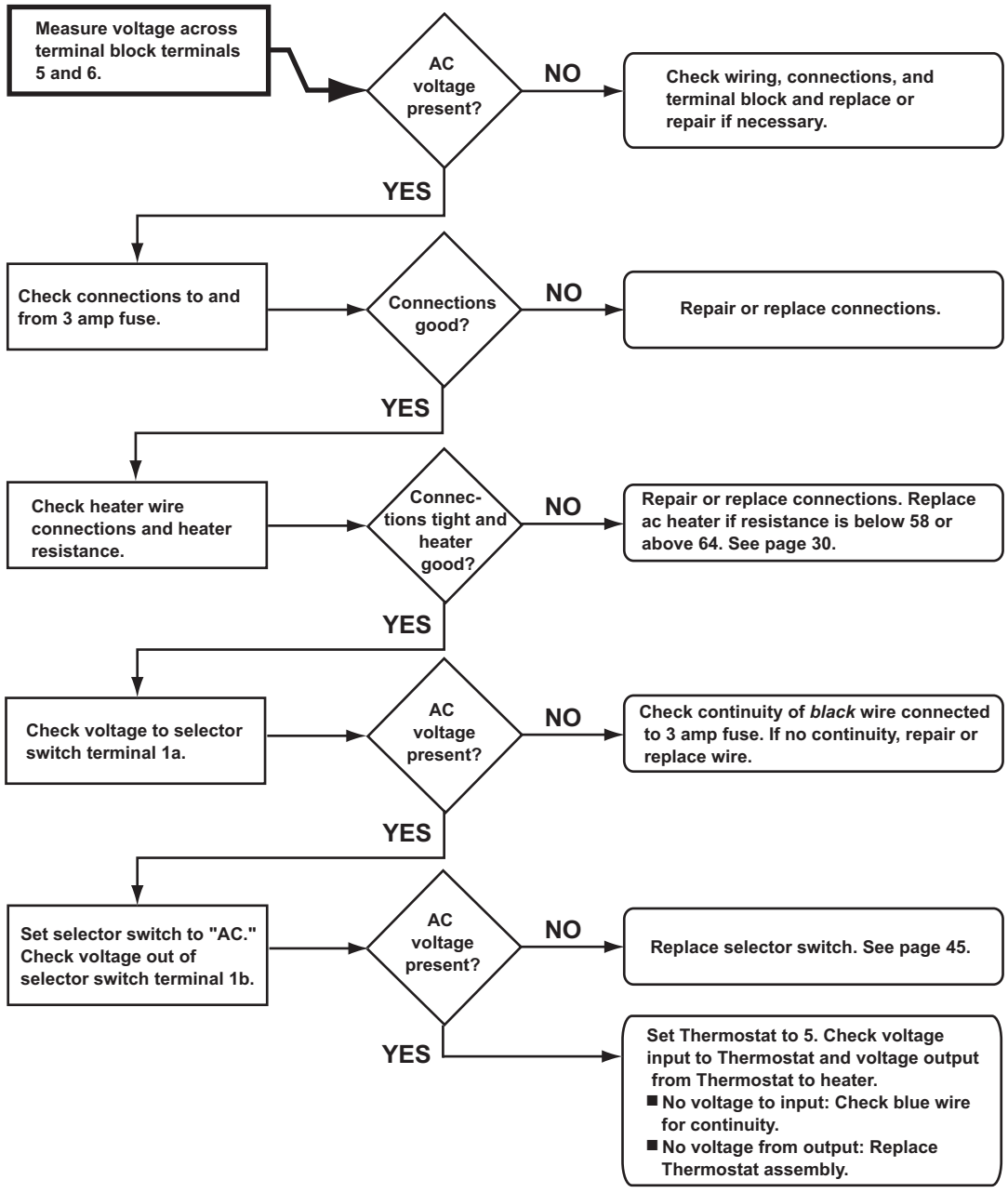

No DC Operation - N500.3 (3-Way Units Only)

Before beginning this procedure make sure:

- The refrigerator is receiving dc power from the RV dc power system.
- Voltage across terminal block connections 7 and 8 is at least 12 Vdc.
- Fuse holder and 25 amp fuse are in good condition.
- Selector switch is set to "DC."

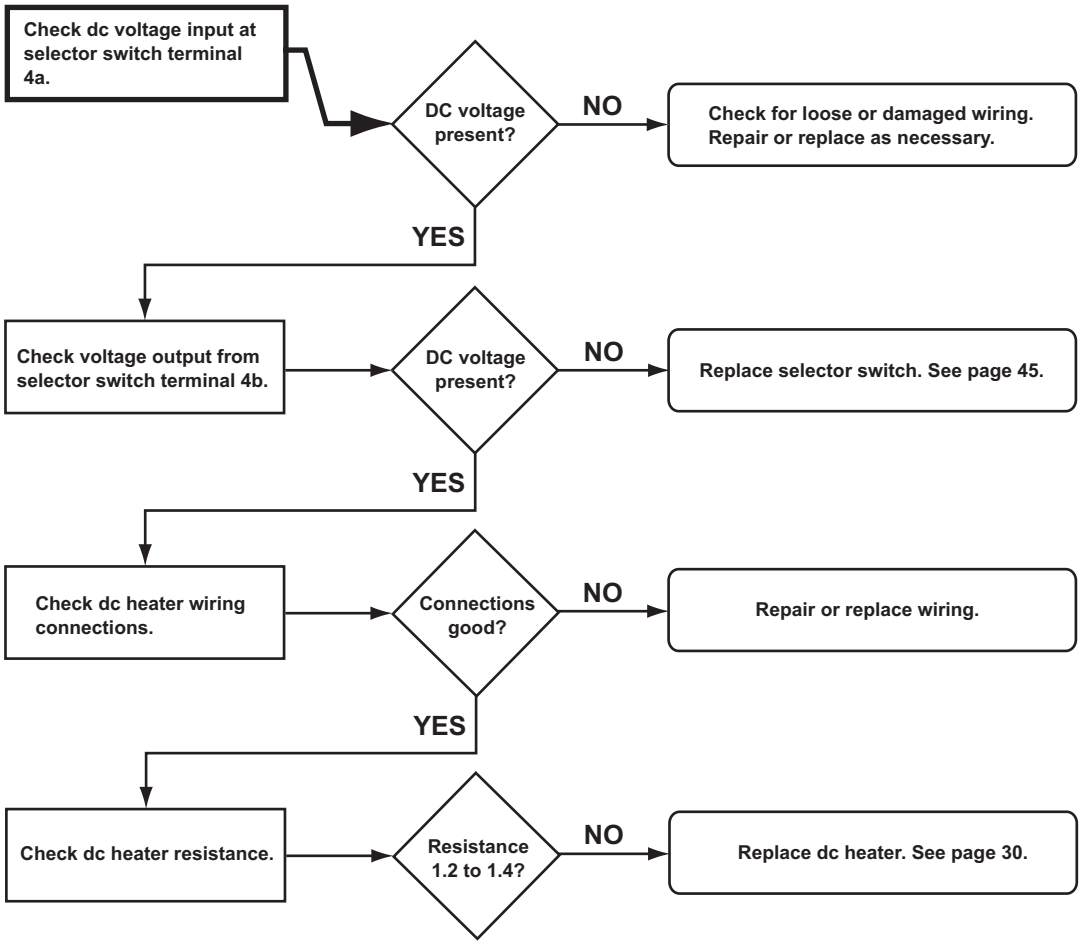

No LP Operation - N500 Units

Before beginning this procedure make sure:

- The refrigerator is receiving dc power from the RV dc power system.
- All ground connections are clean and making full contact.
- LP gas is available.
- LP gas tank valve(s) is open.
- Refrigerator gas valve is open.
- LP gas pressure is between 10.5 and 11.5 in. water column.

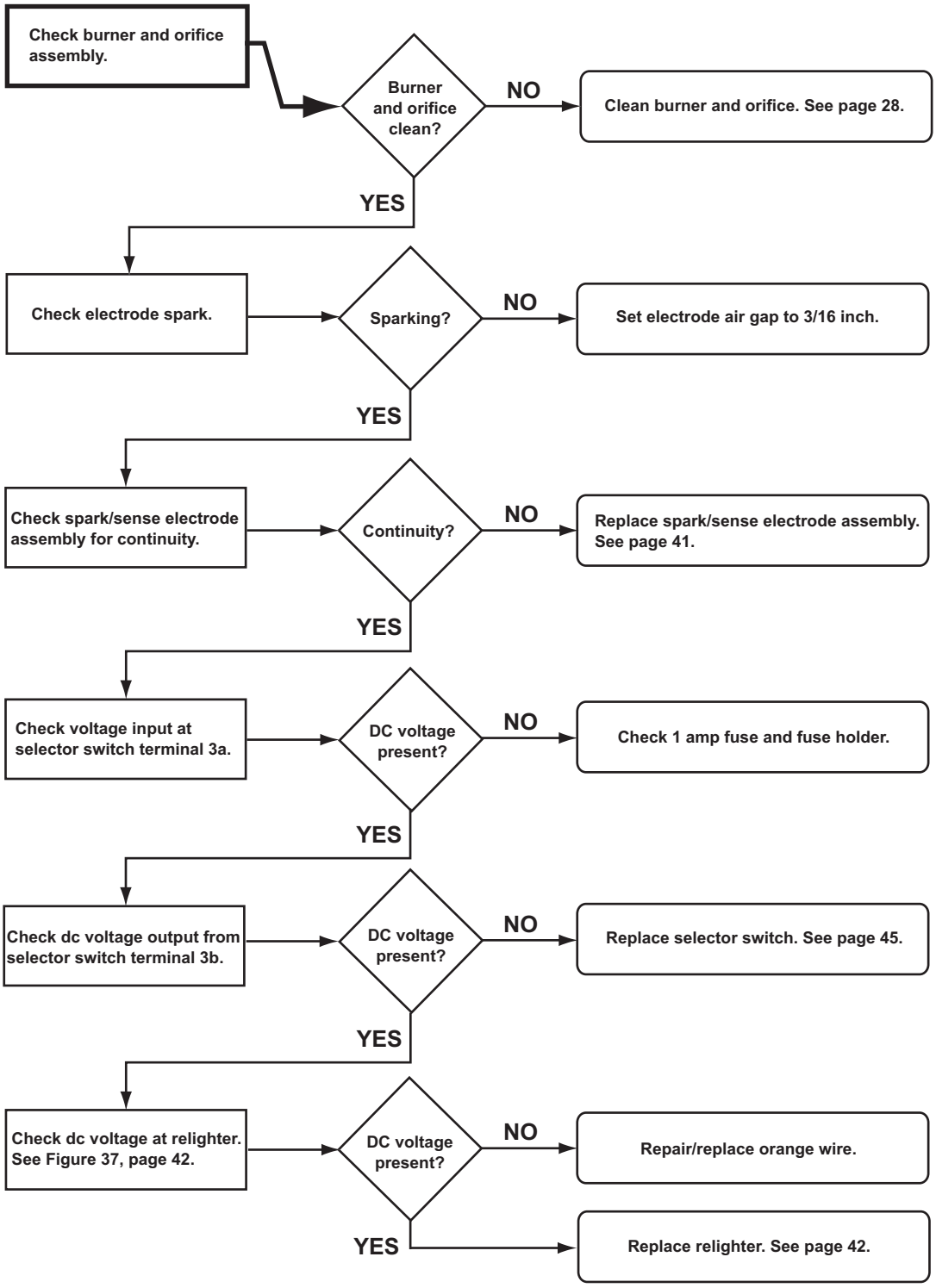

Thermocouple and Interrupter Malfunctioning - N500 Units

The following procedure and troubleshooting chart check the operation of the thermocouple and the interrupter.

Interrupter Voltage Output Check

1. Remove refrigerator from enclosure.
2. Remove upper shroud (four screws).
3. Connect an alternate LP gas supply. Gas pressure must be between 10.5 and 11.5 in. water column.
4. Set selector knob to LP gas operation.
5. Set temperature control knob to 5.
6. Connect voltmeter as shown in Figure 4. Do not disconnect wires from interrupter.
7. Press and hold gas safety valve and turn selector knob to LP to ignite burner. Hold the valve open to maintain the flame lit while following procedure below.

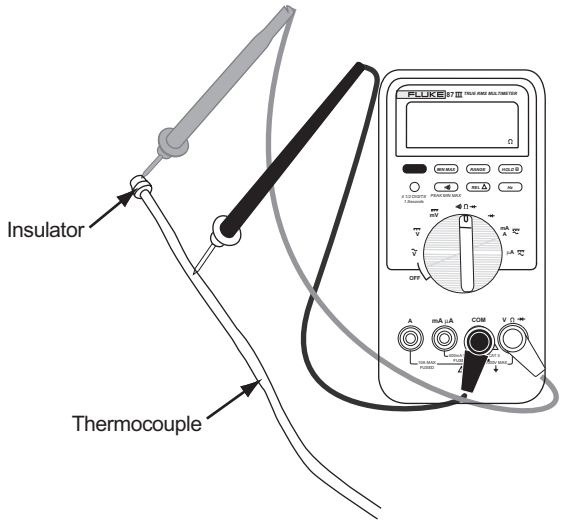

Figure 4. Checking thermocouple voltage output to interrupter

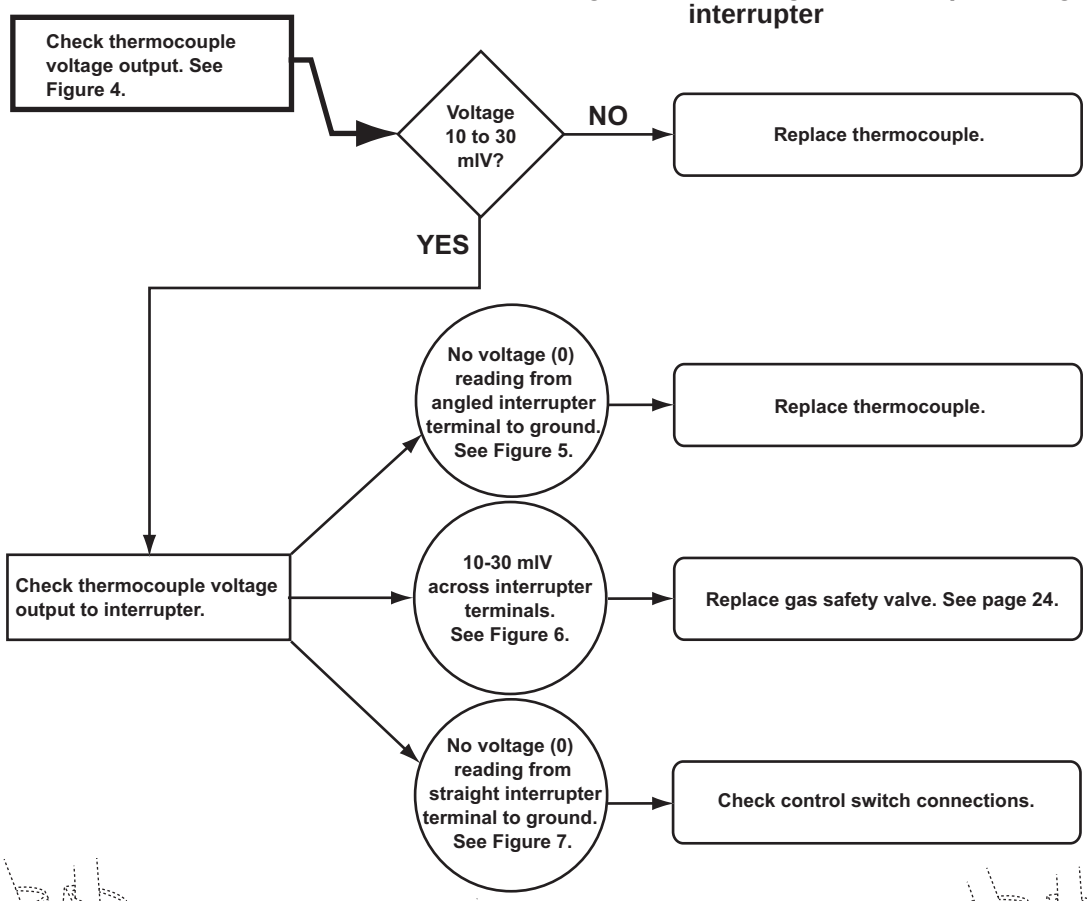

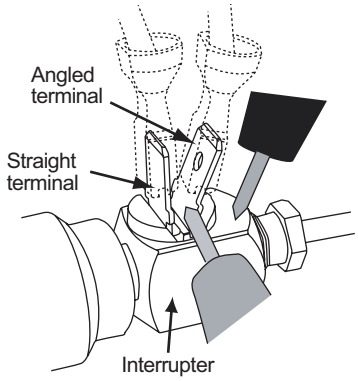

Figure 5. Checking angled terminal to ground

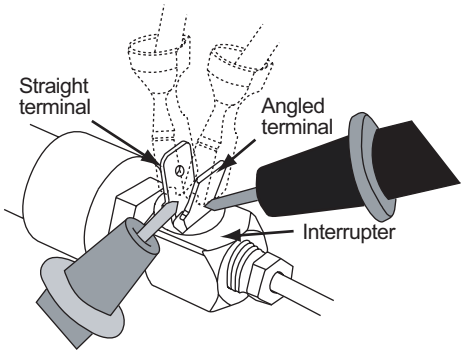

Figure 6. Checking voltage across terminals

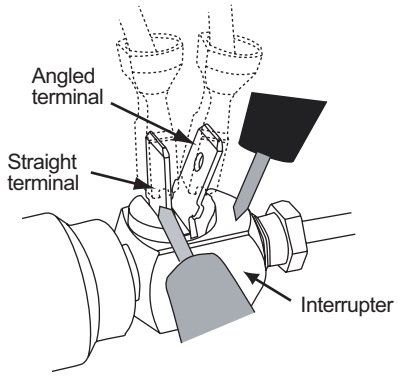

Figure 7. Checking straight terminal to ground

Blank Display - Refrigerator does not turn on - N510

Before beginning this procedure make sure:
- 12 Vdc input to the power board is wired according to the *N500/N510 Installation Manual.*
- No other RV appliances or lighting circuits are connected to the refrigerator dc circuit.

Fault indicator displayed:

AC / AUTO — Blank Display Screen — LP GAS

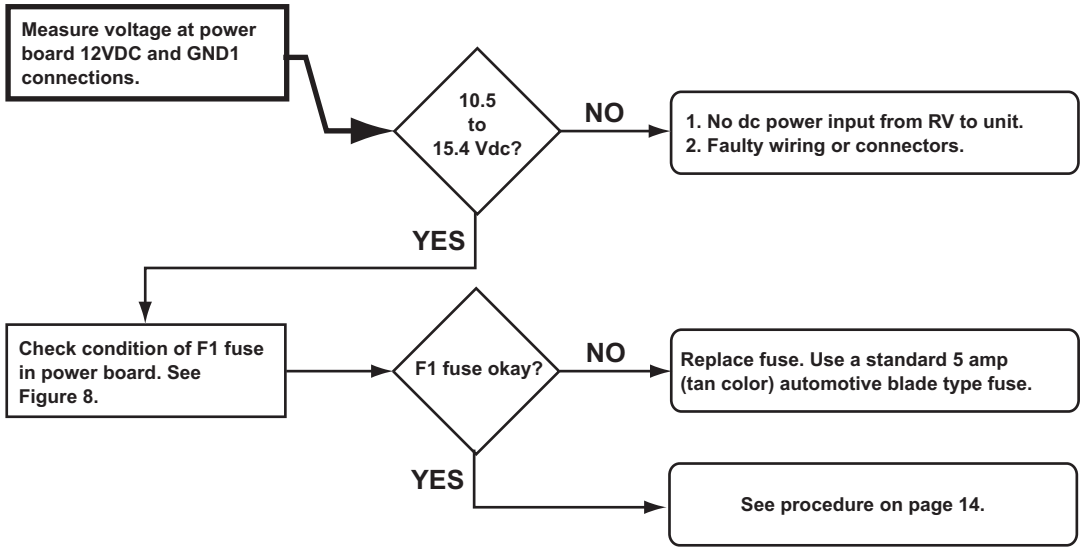

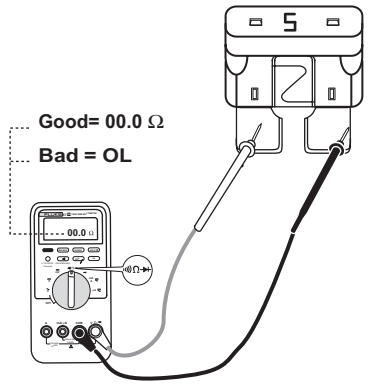

Figure 8: Checking dc fuse continuity

Optical Display Does Not Turn On - Power is available - N510

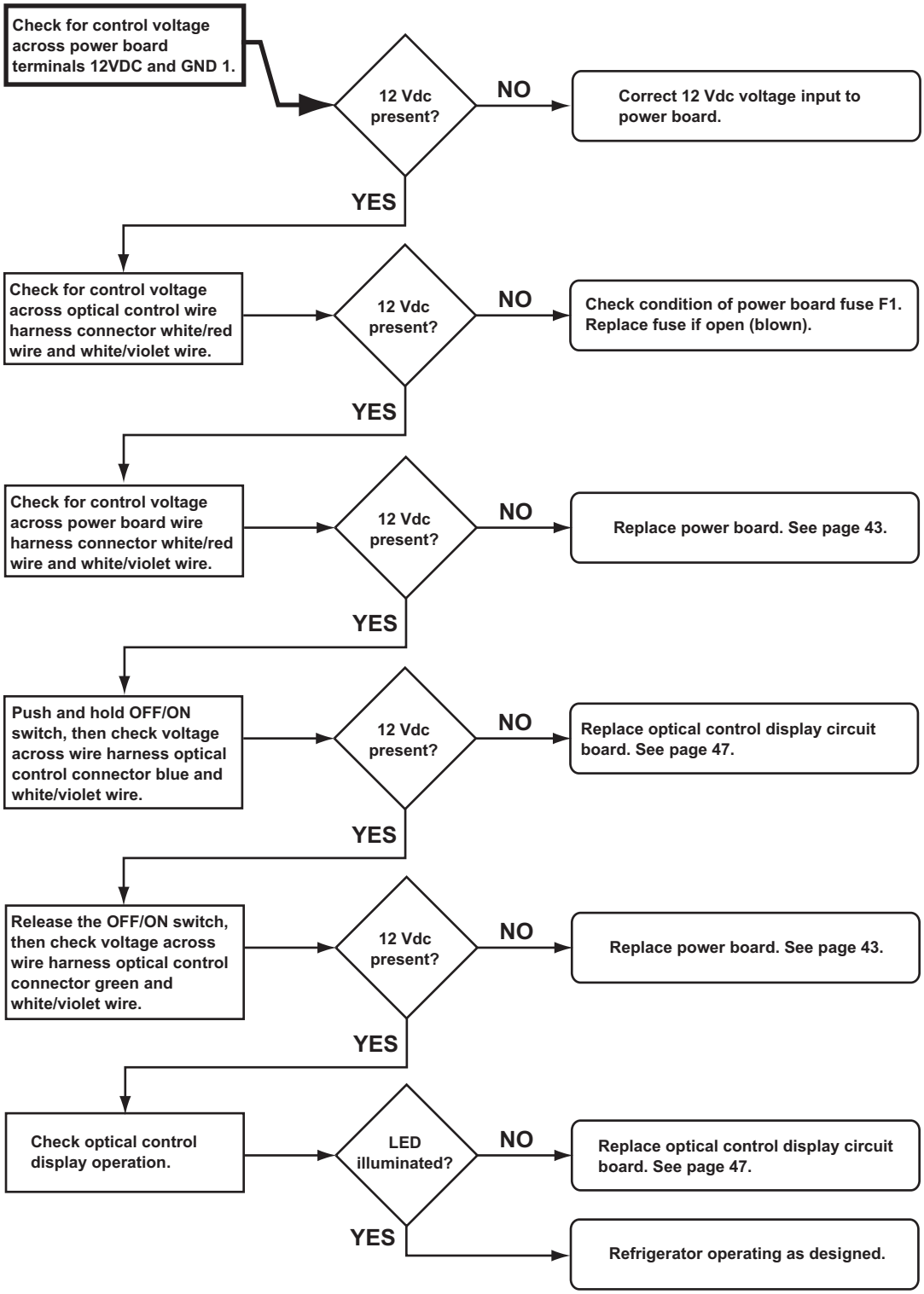

F Fault Code - Burner failed to ignite or reignite - N510

Before beginning this procedure make sure:

- RV LP gas tank valve(s) is open.
- Refrigerator solenoid gas valve manual shutoff is open.
- LP gas pressure at the solenoid gas valve pressure tap is 10.5 to 11.5 inches water column.

Fault indicator displayed:



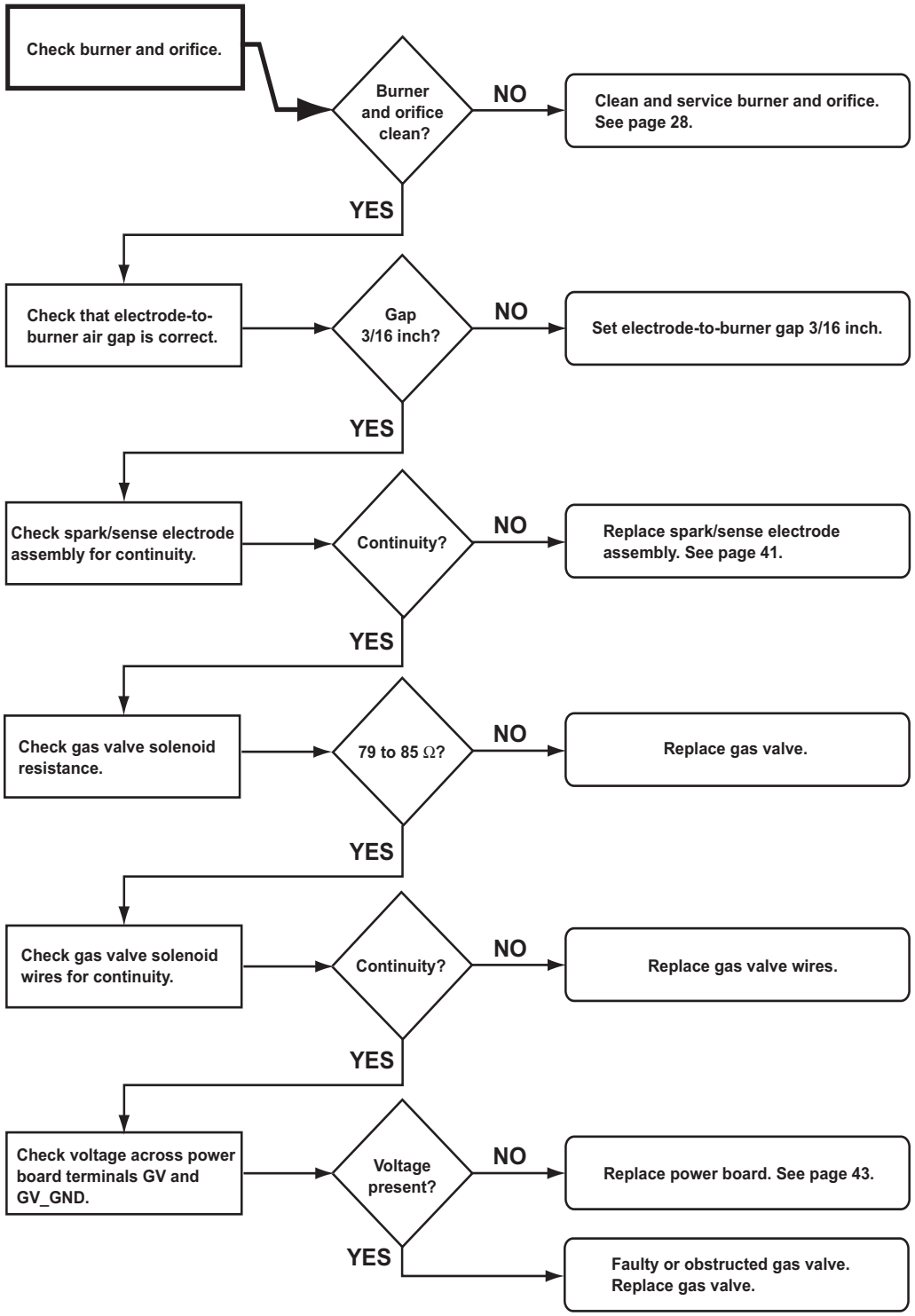

E Fault Code - DC voltage high - N510

Before beginning this procedure:
- Make sure RV dc voltage to refrigerator is 10.5 to 15.4 volts.
- Determine if the "E" fault code displays when the converter is the source of dc power.

Fault indicator displayed.



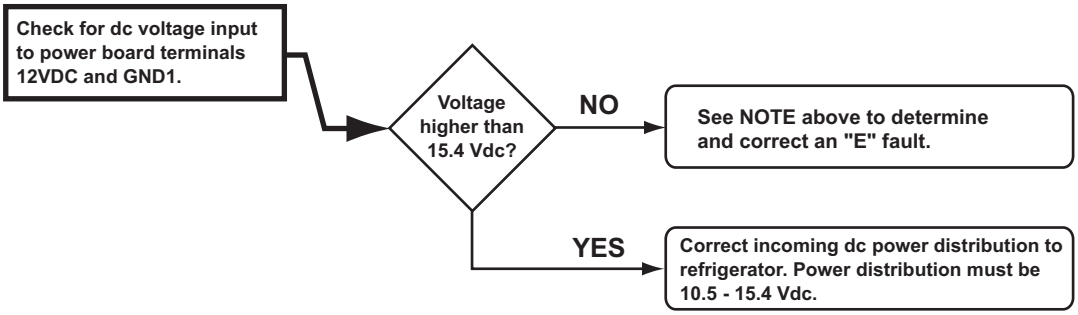

NOTE

Electronic controls operate on 12 Vdc. When an ac/dc converter is used to supply dc power, the refrigerator circuit must be connected to the appliance output terminals of the converter (filtered side).

If the refrigerator circuit is connected to the unfiltered side, the ac ripple generated by the converter may cause a "E" or “C” fault code to display.

To troubleshoot an "E" or “C” fault, connect a charged 12 volt automotive battery to the power board. If the "E" or “C” code clears, the fault was caused by unfiltered dc power. If the "E" or “C” code does not clear, replace the power board (see page 43).

C Fault Code - DC voltage low - N510

Before beginning this procedure:
- Make sure RV dc voltage to refrigerator is 10.5 to 15.4 volts.
- Determine if the "C" fault code displays when the converter is the source of dc power.

Fault indicator displayed.



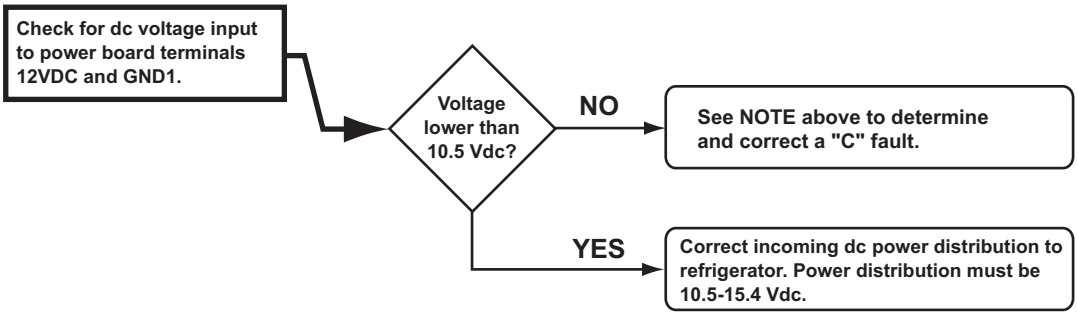

A Fault Code - No ac power available - N510

Before beginning this procedure make sure:
- No other problem exist with the RV ac power supply.
- No other appliances or lighting circuits are connected to the refrigerator ac circuit.
- Extension cords are not being used to supply ac power to the refrigerator.

Fault indicator displayed:



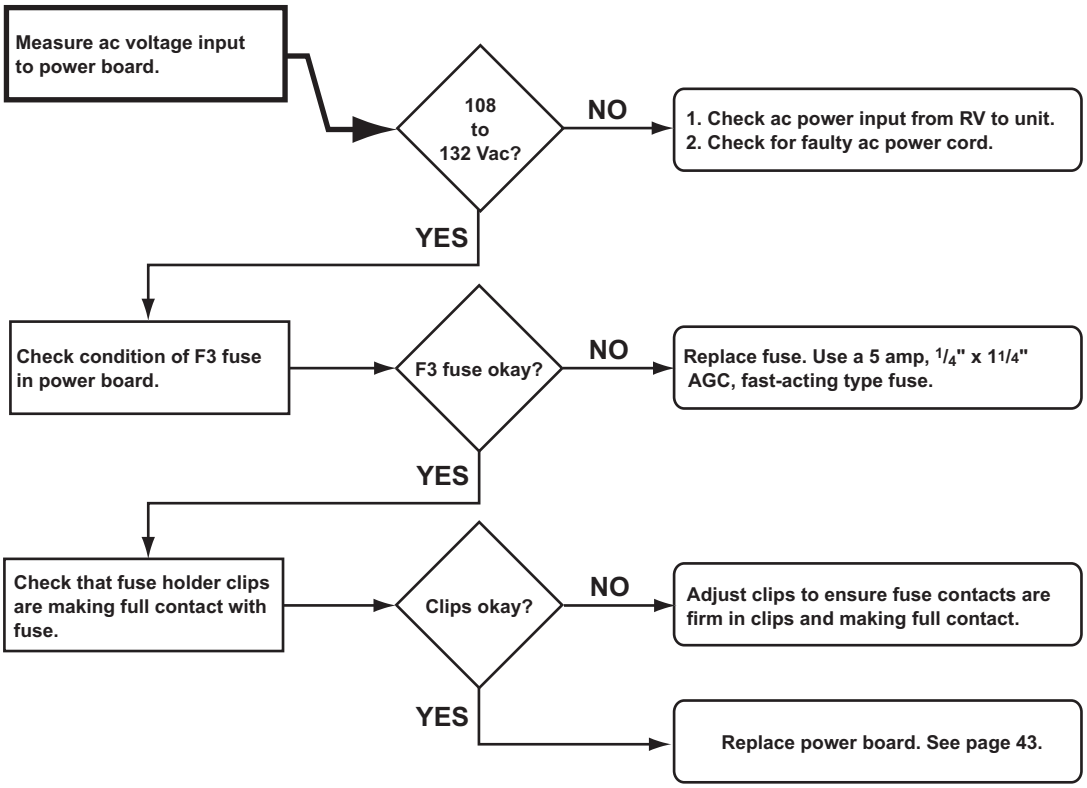

S Fault Code - Flame sense circuit failure - N510

Fault indicator displayed:





H Fault Code - AC heater failed open - N510

Before beginning this procedure make sure:
- RV ac voltage to the refrigerator is 108 to 132 volts.
- No other appliance or lighting circuit is connected to the refrigerator ac circuit.

Fault indicator displayed:



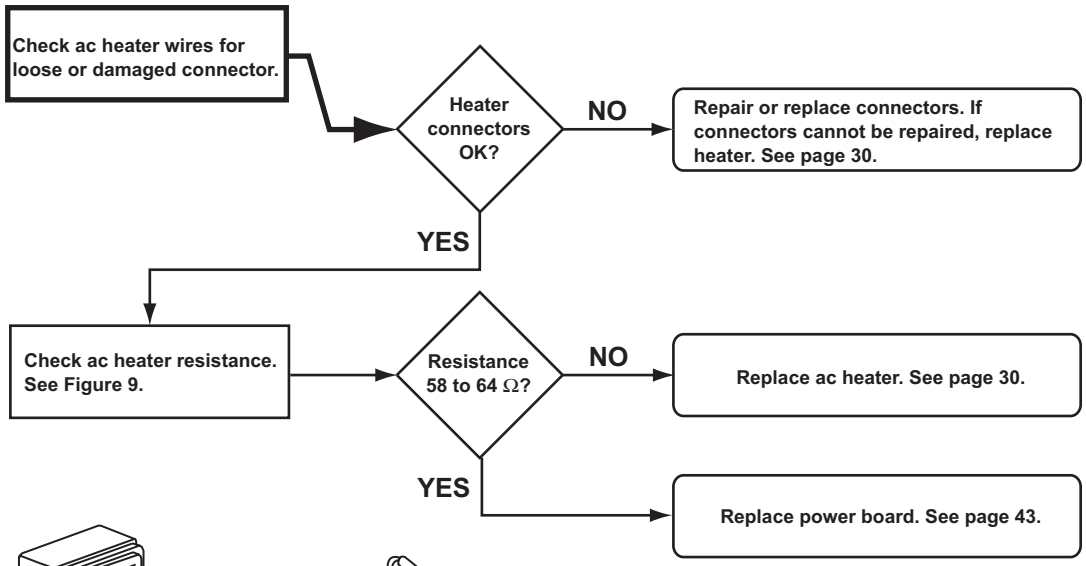

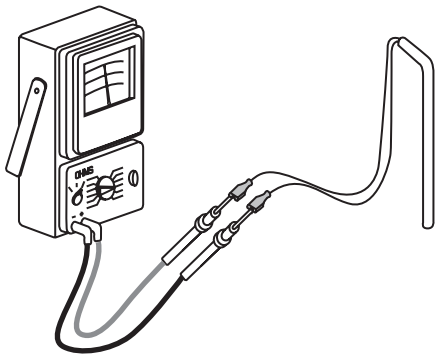

AC heater resistance 58 to 64 Ω.

Figure 9. Measuring ac heater resistance

r Fault Code - AC relay stuck closed - N510

Fault indicator displayed:





Thermistor Failure Fault - Controls in Backup Operating System Mode - N510

Before beginning this procedure:

- Make sure thermistor assembly is connected to the wire harness.

Fault indicator displayed:

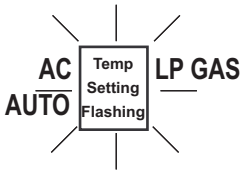

Check thermistor wire assembly and connector for dirty/broken connections. Thermistor connectors are located in P1 connector terminals 8 and 13.

Wires and connector good?

NO → **Clean/repair terminals or connector as required.**

YES → **Check thermistor resistance. See Figures 10 and 11. If resistance is not within specified ranges, replace thermistor.**

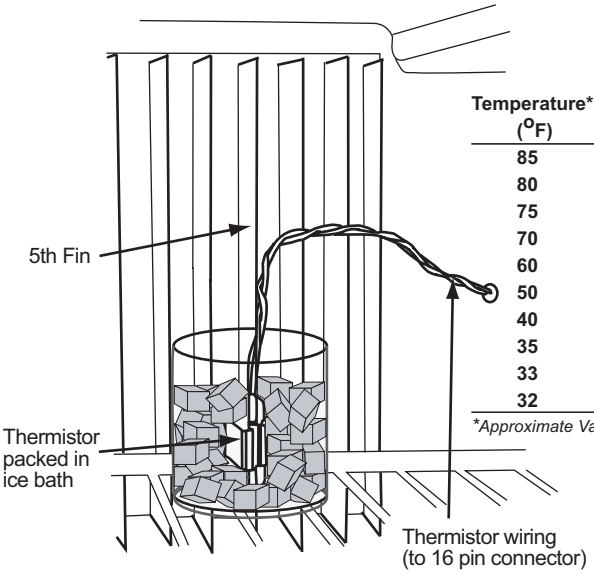

Temperature* (^{O}F)	Resistance* (kΩ)
85	8.1– 9.0
80	9.1–10.0
75	10.1–11.0
70	11.1–12.0
60	12.1–13.0
50	15.5–16.5
40	22.5–23.5
35	24.5–25.5
33	28.5–29.5
32	30.0–32.0

**Approximate Values*

Figure 10. Thermistor assembly

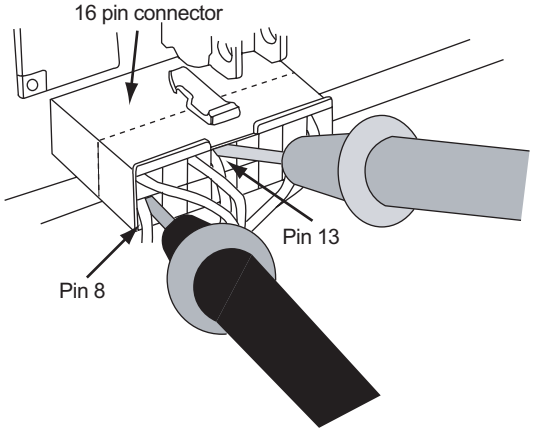

Figure 11. Checking thermistor resistance

Backup Operating System - N510 Models

The backup operating system (BOS) is an electronically controlled duty cycle. It maintains the refrigerator in operation if the thermistor is disconnected or fails. The BOS maintains cooling by controlling the heat source selected. When the refrigerator is operating in BOS, the length of the cooling cycle is regulated not by temperature, but by time.

To accomplish this, the BOS adjusts the length of the cooling cycle according to the temperature setting selected by the user--the higher the temperature setting, the longer the cooling cycle. For example, if the temperature setting is set to 4, raising the setting to 5 will lengthen the cooling cycle, making the cabinet colder.

When a warmer temperature is desired, changing the temperature setting to a lower number shortens the cooling cycle. For example, if the temperature setting is set to 5, lowering the setting to 4 will shorten the cooling cycle.

When the N510 controls shift to BOS operation, the temperature setting flashes for ten seconds when the TEMP button is pressed. After ten seconds, the selected operation mode indicator displays.

N Fault Code - No cooling detected by the controls - N510

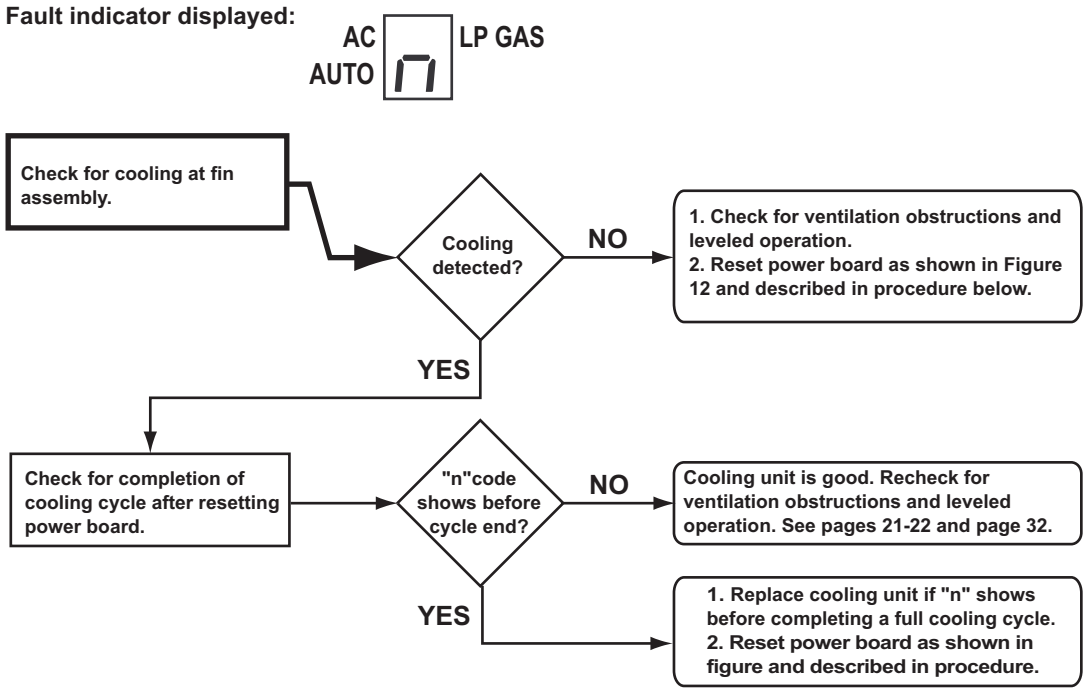

Power Board Resetting Procedure

1. Turn OFF the refrigerator.
2. Disconnect the following from power board:
   a. 12 Vdc positive and negative wires.
   b. AC power cord.
   c. Solenoid gas valve wires.
   d. Spark/sense electrode assembly wires.
3. Remove the power board cover.
4. Reconnect 12 Vdc positive and negative wires.
5. Turn ON the refrigerator.
6. Locate Pin 15 on 16 pin connector (P1). Pin 15 is the empty socket to the right of the white/violet wire on the top row. See Figure 12.
7. Using an insulated jumper wire, short Pin 15 to the power board ground lug for 10 - 15 seconds. A click sound will indicate when the controls are reset. See Figure 12.

NOTE

A jumper wire to short Pin 15 to ground can be made from a six inch long insulated 22 AWG wire with a 1/2 inch of insulation stripped from each end.

8. Turn OFF the refrigerator.
9. Turn ON refrigerator. If "n" code displays, repeat steps 7 - 9.
10. Turn OFF the refrigerator.
11. Disconnect the 12 Vdc power positive and negative wires from the power board.
12. Install the power board cover.
13. Reconnect the following to the power board:
    a. Spark/sense electrode assembly wire.
    b. Solenoid gas valve wires.
    c. AC power cord.
    d. 12 Vdc positive and negative wires from the power board.
14. Place refrigerator in service.

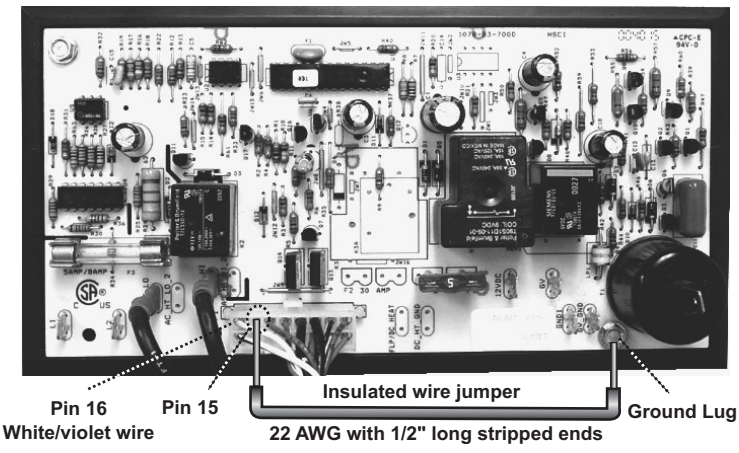

Figure 12. Resetting the power board

Roof Exhaust Venting

NOTE

The general guidelines for intake vents and roof exhaust vents presented in this section do not replace the instructions and/or guidelines provided in the *N500/N510 Installation Manual* and the *Ventilation Guidelines for Gas/Electric Refrigerators*, part number 622090A (3-01). Refer to the *N500/N510 Installation Manual* and *Ventilation Guidelines for Gas/Electric Refrigerators* for the latest information on approved vents, installation instructions, and special construction exceptions.

Illustrations of different venting applications are shown in Figure 13 and Figure 14.

Air Intake Vent
The ventilation and combustion air flows into the enclosure through the air intake vent.

The space between the air intake vent and the rear of the refrigerator must be kept clear at all times. Any obstruction in this area may cause serious ventilation problems. The air intake vent opening also provides access for servicing cooling unit components.

Roof Exhaust Vent
The heat absorbed by ventilation air and combustion gases flow out of the enclosure through the roof exhaust vent.

The roof exhaust vent is equipped with a non-removable metal mesh screen that prevents leaves, debris, birds or rodents from getting into the enclosure. The roof cap is fastened to the exhaust vent with four screws. The cap is always installed with the slope towards the front of the RV.

Baffles
The minimum and maximum clearances for installing the refrigerator or correcting ventilation problems on roof vented units are listed in Table 1. Baffles are required whenever installations exceed maximum clearances listed in Table 1. Figure 13 and Figure 14 show baffle locations.

	Minimum	Maximum
Bottom	0 inch	0 inch
Sides (each)	0 inch	1/8 inch
Top	0 inch	1/4 inch
Rear	0 inch	1 inch

Table 1. Clearances for roof vented installations

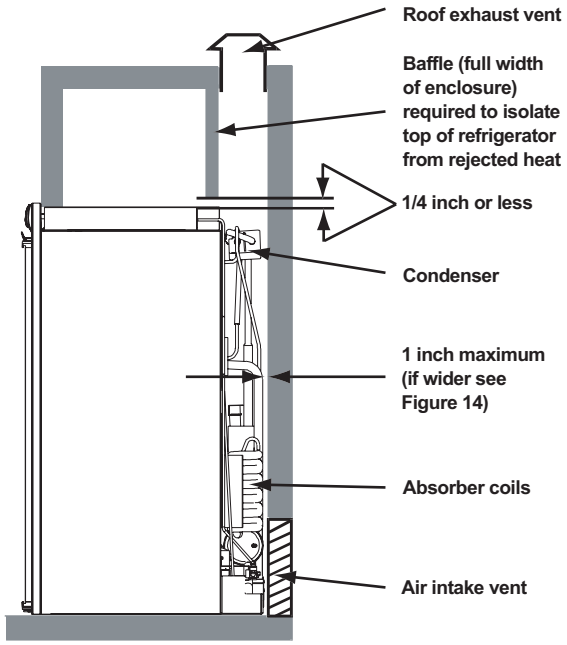

Figure 13. Roof vented ventilation arrangement

Vertical Angled Baffles
Vertical angled baffles are required when the roof exhaust vent is installed inboard of the condenser. Figure 14 shows the angled vertical baffles required on inboard roof vent installations. The horizontal wall baffles are required whenever the distance between the cooling unit and the interior surface of the outside wall exceeds one inch.

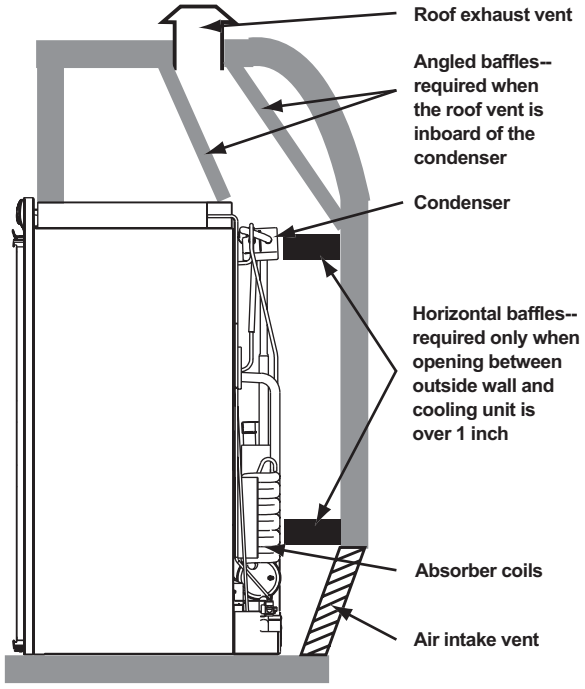

Figure 14. Roof vented ventilation with roof vent inboard of condenser

Double Sidewall Venting

Because of increased installation of refrigerators in RV slide outs, NORCOLD has developed venting guidelines for double sidewall vent applications. This ensures NORCOLD refrigerators meet the ANSI Z21.19 standards for cooling performance when used in slide out applications.

The challenge with slide out installations is that the "chimney effect" (see page 32) that is present with roof vent installations is not as strong in slide outs. To improve the airflow of the chimney effect, side vent installations must have fans and baffles. These fans and baffles direct the air flow through the surfaces of heat rejecting components. NORCOLD has determined that the following four key design considerations optimize heat removal in N550/N510 slide out applications.

- Refrigerators installed in slide outs must have a fan or fans to assist air flow. Fan kits are available through NORCOLD.
- Fresh air must be directed to flow through the surface areas of the absorber coils, condenser fins, and the outer surface of the canister.
- Corners and structural pockets where heated air may stagnate must be reduced in size or completely eliminated.
- N500/N510 refrigerators must have a at least 47 3/4 inches distance between the upper exhaust vent and the lower intake vent. Refer to the *N500/N510 Installation Manual* for more information.

Two baffles are required for the N500/N510 model in double sidewall venting applications.

Double sidewall venting examples are shown in Figures 15 and 16.

Air Intake Vent
The ventilation and combustion air flow into the enclosure is through the air intake vent.

Sidewall Exhaust Vent
The heat absorbed by ventilation air and combustion gases flow out of the enclosure through the sidewall exhaust vent.

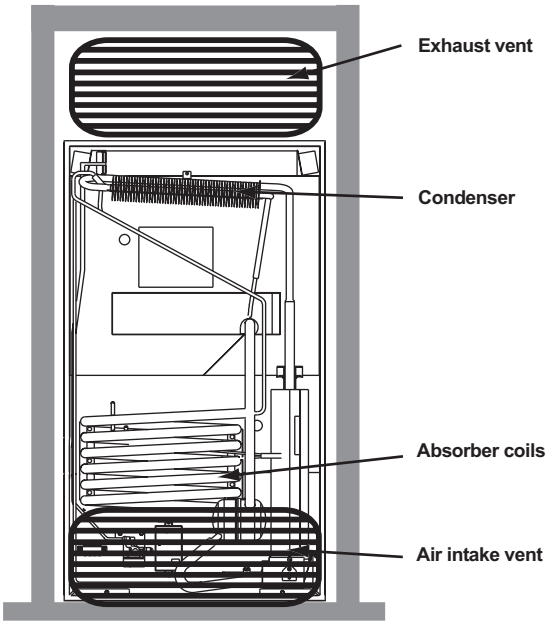

Figure 15. Double sidewall ventilation arrangement

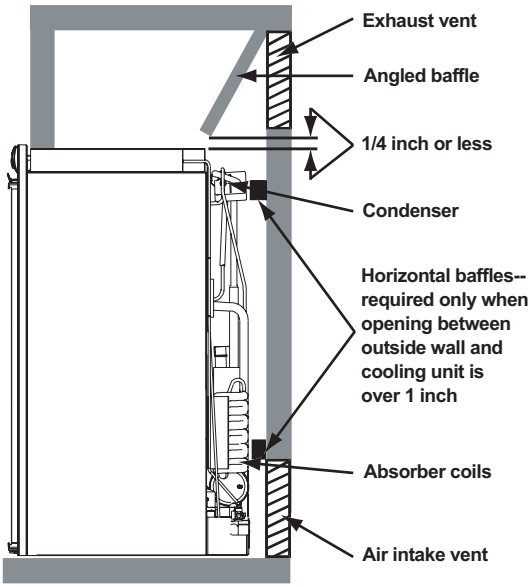

Figure 16. Baffles required for sidewall venting

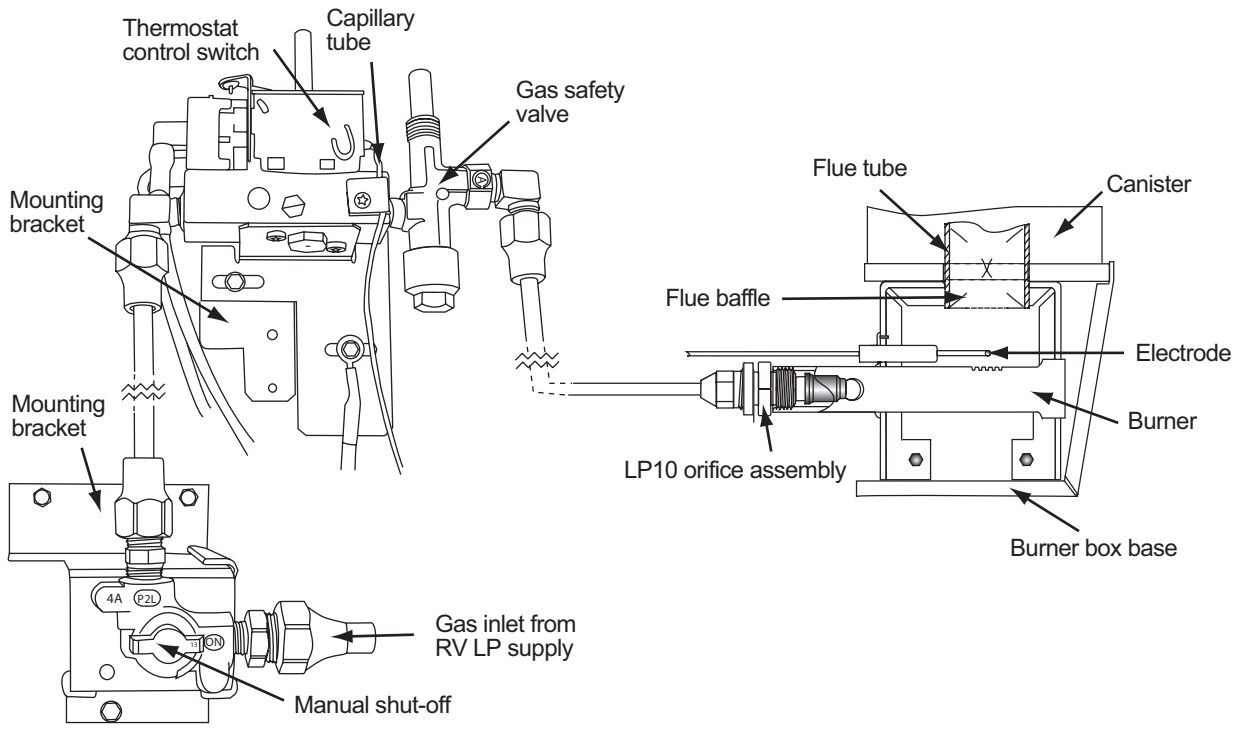

Figure 17. N500 LP gas system components

Components

Manual Shutoff Valve

The manual shutoff valve controls the flow of LP gas from the RV LP supply to the gas valve-thermostat assembly. See Figure 18.

Orifice

> ***WARNING:***
>
> **Do not** separate the orifice from its threaded adaptor! The orifice and its adaptor are a sealed assembly. Separating the orifice from the threaded adaptor can cause LP gas leakage. An LP gas leak can ignite and cause an explosion and/or fire which could result in substantial property damage, burn injury, or death.

The orifice meters the flow of gas to the burner. The N500 model requires the LP10 orifice. See Figure 19. A restricted, clogged, or damaged orifice will affect the burner's heat output, which in turn affects the performance of the cooling unit when the refrigerator is operating on LP gas. The orifice should be checked and cleaned annually to maintain the LP gas combustion system at peak performance. It should also be checked before and after seasonal storage, and before the recreational vehicle is placed in service. See page 28 for more information on cleaning the burner and its components.

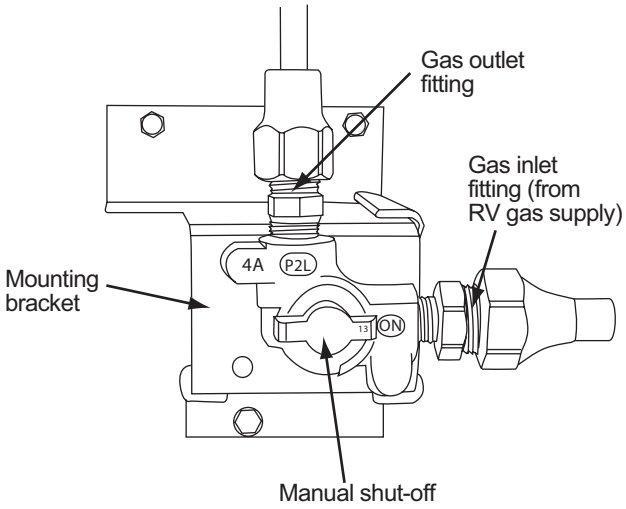

Figure 18. N500 manual shutoff valve

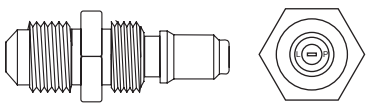

Figure 19. LP10 orifice

Gas Safety Valve

The gas safety valve is mounted on the control panel in the gas valve-thermostat assembly. This valve is designed to stop the flow of LP gas to the burner when a flame failure occurs. Its operation is controlled by the thermocouple, which connects directly to the gas valve's interrupter. During the ignition process, the valve button must be held in (open) until a flame is established at the burner. See Figure 20.

Gas Safety Valve Replacement

Refer to Figure 20 for locations of components.

1. Turn OFF refrigerator.
2. Unplug ac power cord.
3. Disconnect 12 Vdc supply.
3. Disconnect LP gas supply.
4. Remove screws from back mounting flange (if present).
5. Remove retaining screws located on the front of breaker (will need to open door to remove).
6. Remove refrigerator from enclosure.
7. Remove wiring shroud (four screws).
8. Remove thermostat knob.
9. Remove gas valve-thermostat retaining screws (2).
10. Mark interrupter wiring for ease of reinstallation
11. Remove red and blue switch leads.
12. Disconnect thermocouple.
13. Remove interrupter
14. Remove adapter.
15. Disconnect gas outlet.
16. Disconnect gas safety valve from thermostat assembly.
17. Apply sealant to switch outlet threads.

NOTE

Make sure sealant does not extend beyond the threads and onto the valve nipple.

18. Install adapter.
19. Reconnect interrupter.
20. Reconnect thermocouple.
21. Reconnect red and blue switch leads and blue flame indicator lead to interrupter.
22. Install gas valve-thermostat assembly and retaining screws.
23. Replace thermostat knob.
24. Replace wiring shroud.
25. Install refrigerator in enclosure.
26. Install front breaker retaining screws.
27. Install back mounting flange screws.
28. Reconnect RV LP gas supply.
29. Reconnect 12 Vdc power supply.
30. Plug in ac power cord.
31. Place refrigerator in service.

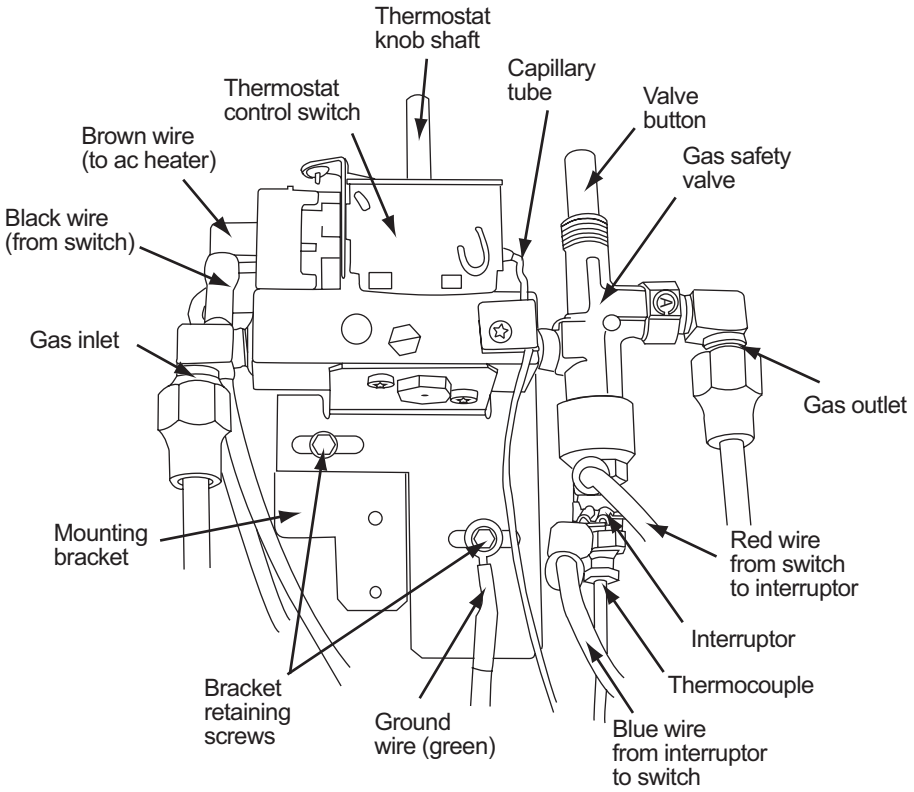

Figure 20. Gas valve - thermostat assembly

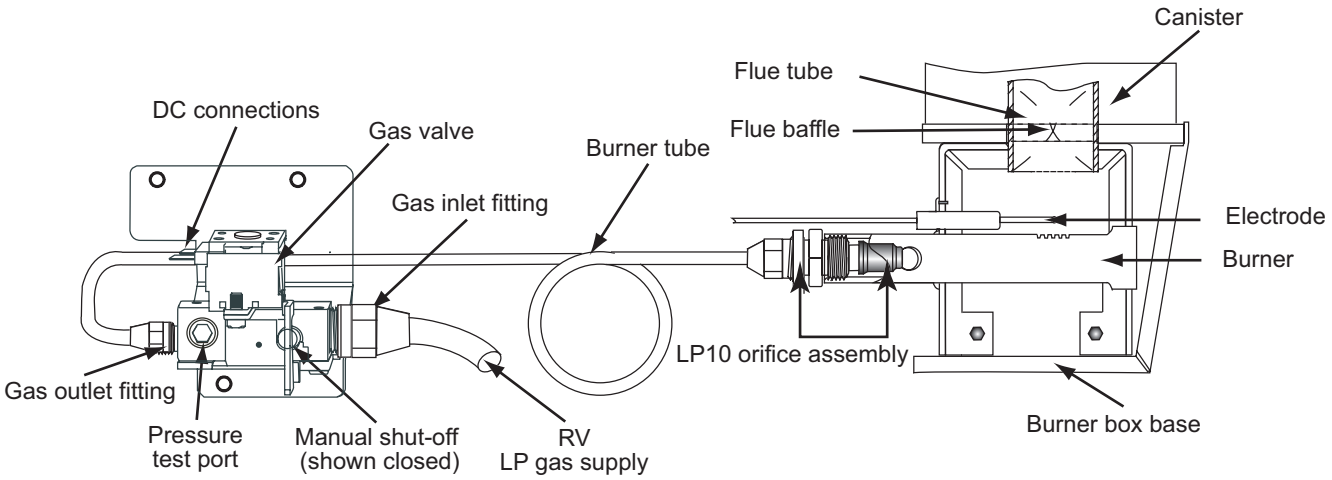

Figure 21. N510 LP gas system components

Components

Solenoid Gas Valve

The solenoid gas valve, shown in Figure 22, controls the flow of gas from the RV gas supply to the burner. Integrated in the valve's body are a manual shutoff and pressure tap. The valve's manual shutoff is a spring-loaded, quarter turn, manually operated valve.

To manually shut off gas to the burner, pull the handle slightly away from the body of the valve, then turn it one-quarter turn (90 degrees) counterclockwise.

The solenoid gas valve inlet fitting is 3/8 inch, male threads; the outlet fitting is 1/4 inch, male threads.

Orifice

> ***WARNING:***
>
> **Do not** separate the orifice from its threaded adaptor! The orifice and its adaptor are a sealed assembly. Separating the orifice from the threaded adaptor can cause LP gas leakage. An LP gas leak can ignite and cause an explosion and/or fire which could result in substantial property damage, burn injury, or death.

The orifice meters the flow of gas to the burner. The N510 model requires the LP10 orifice. See Figure 23. A restricted, clogged, or damaged orifice will affect the burner's heat output, which in turn affects the performance of the cooling unit when the refrigerator is operating on LP gas. The orifice should be checked and cleaned annually to maintain the LP gas combustion system at peak performance. It should also be checked before and after seasonal storage, and before the recreational vehicle is placed in service. See page 28 for more information on cleaning the burner and its components.

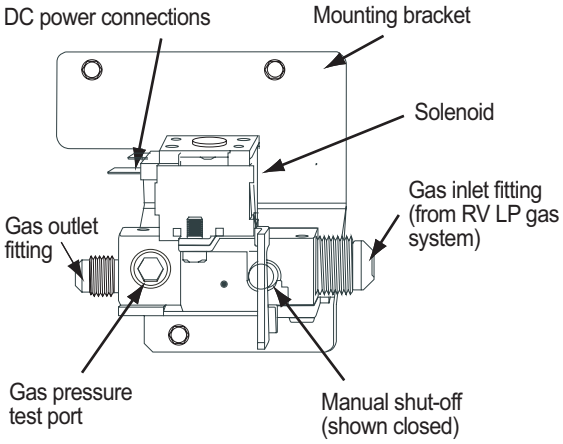

Figure 22. N510 solenoid gas valve

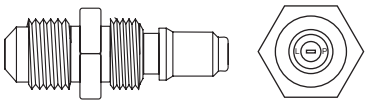

Figure 23. LP10 orifice

Components Continued - All Models

Burner

A five slot burner is the combustion chamber for the LP gas. Poor or no cooling while operating on LP gas can usually be traced to a dirty, clogged, or damaged burner. In most instances, a weak or erratic flame indicates the burner and orifice need service. The burner flame appearance should always conform to the pattern shown in Figure 24. To check burner performance:

1. Set the thermostat knob to 5.
2. Start and operate the refrigerator on LP gas.

> ***CAUTION:***
>
> The burner box cover and inspection port cover may be hot. To prevent burns, wear gloves and exercise extreme care when working on the burner cover or opening and closing the burner box inspection port cover.

3. Open the burner box inspection port. Refer to Figure 24 for flame appearance guidelines.

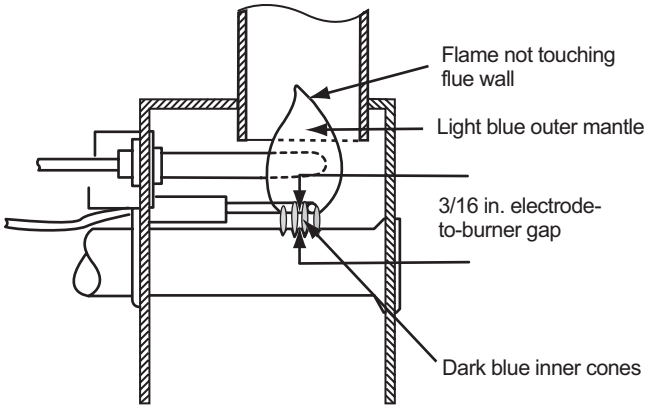

Figure 24. LP gas flame appearance.

Flue Tube

The flue tube channels hot exhaust gases towards the exhaust vent. It should be cleaned annually to maintain the combustion system at peak performance.

Flue Cap

The flue cap maintains a slight back pressure of hot combustion exhaust gases in the flue tube. This slight back pressure helps to establish and maintain a good draft of ventilation air through the cooling unit.

Flue Baffle

The flue baffle is located inside the flue tube and helps distribute the heat to the generator section of the cooling unit. The flue baffle must never be permanently removed. The flue baffle should be cleaned annually to maintain the combustion system at peak performance.

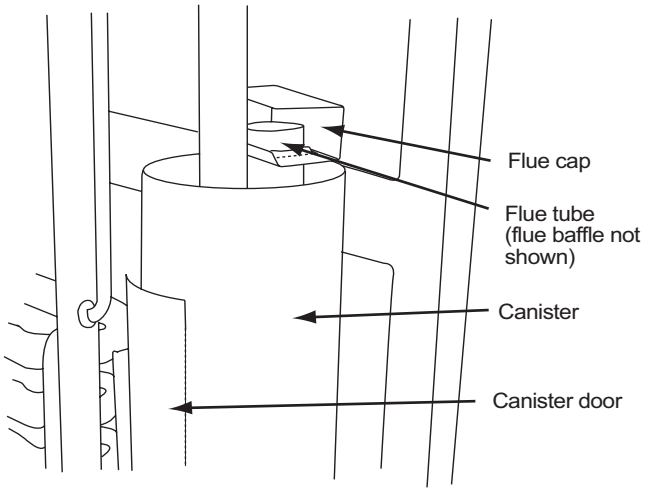

Figure 25. Flue and components

> ***CAUTION:***
>
> Flue and components may be hot. Allow flue to cool before servicing.

To remove the flue baffle for cleaning:

1. Remove the flue cap (see Figure 25).
2. Unclip the baffle retaining wire from the rim of the flue tube.
3. Pull the baffle out of the flue tube.

Handling of LP Gas Lines and Fittings

Loosen and tighten all connections using two wrenches. Insufficient or excessive force when tightening fittings can result in loose joints or deformed joint parts. Either condition can result in LP gas leakage.

> ***WARNING:***
>
> When working on or near the LP gas system:
>
> - **Do not** smoke or light fires! Extinguish all open flames!
> - **Do not** use an open flame to leak test any of the LP gas system components. LP gas is highly flammable and explosive.
> - **Do not** connect the refrigerator directly to the LP gas tank. Always use an approved pressure regulator between the LP gas tank and the refrigerator LP gas system.
> - Always use two wrenches to tighten or loosen connections to prevent damage to connections, piping, and components. Damaged connections, piping, and components create the potential for gas leaks.

WARNING:

When working on or near the LP gas system:

- Always check for gas leaks after completing service or repairs to the gas system. A propane gas leak can ignite and/or explode, which can result in extensive property damage, serious personal injury or death.
- Check that all tubing is free of dents or kinks
- **Do not** alter tubing radius.
- When disconnecting LP gas lines, make sure the main LP gas valve at the tank is closed.

LP Gas Pressure

LP gas pressure must be supplied and maintained between 10.5 and 11.5 in. water column.

Testing for Gas Leakage

WARNING:

Do not allow the leak detecting solution to wet or come in contact with electrical components. Leak detecting solutions are electrically conductive and can create a potential shock hazard, electrical shorts, and/or fire.

Before connecting the refrigerator to the RV LP gas supply line:

The ANSI 119.2 Standard on Recreational Vehicles requires that the gas piping be proven leak free by testing before the refrigerator is connected to the LP gas system. This standard requires that the system maintains at least 3 psi for a period of 10 minutes. Before this test is administered, the temperature of the piping system must be approximately the same throughout the system and a uniform temperature shall be maintained throughout the test period. The test can be conducted using air pressure and one of the following methods:

Method A:

1. Connect a mercury manometer, slope gauge, or equivalent measuring device to the LP gas system.

NOTE

The measuring device used must be calibrated so it can be read in increments no greater than 1/10 psi.

2. Pressurize the system to 3 psi then shut off the air supply valve. The system must maintain 3 psi for 10 minutes.

Method B:

1. Apply a bubble type leak detector solution between the source of air pressure and the piping system.
2. Pressurize the system to 3 psi then shut off the air supply valve.
3. Check for air bubbles indicating leaks.

After refrigerator has been connected to the RV LP gas supply line:

The ANSI 119.2 Standard on Recreational Vehicles requires that the gas piping be proven leak free by testing after the refrigerator is connected to the LP gas system. The LP gas connection to the refrigerator can be leak tested using commercially available bubble leak test solution, soap and water, or by performing a pressure drop test (explained at below).

CAUTION:

Do not use any liquid detergents that contain ammonia or chlorine for testing. These substances can corrode brass components.

Bubble leak test solution/soap and water leak test:

To test the LP gas connections for gas leakage using a commercially available leak test solution or soap and water solution:

1. Pressurize the LP gas system between 10.5 in. water column and 11.5 in. water column.
2. Apply the bubble leak detection solution using a small brush or spray applicator.
3. Repair all gas leaks observed and retest for gas leakage after completion of repairs.

Pressure drop test:

A pressure drop test requires the use of a manometer or calibrated gauge to indicate any drop of system pressure due to leakage. In order to pass the pressure drop test, the system must maintain pressure over a period of 3 minutes. The guidelines to perform a pressure drop test are below.

1. Connect a manometer or pressure gauge to the refrigerator LP gas system pressure tap.
2. Pressurize the LP gas system between 10.5 in. water column and 11.5 in. water column.
3. Make sure the temperature of the piping system is approximately the same throughout and maintain uniform temperature throughout the test period.
4. Close the shutoff valve at the refrigerator.
5. Close the shutoff valve at the LP gas tank(s).
6. The LP gas system must maintain water column pressure over a period of 3 minutes.

Burner Cleaning Procedure

> ***WARNING:***
>
> **Burn hazard!** Allow the burner box and burner components to cool before attempting to service the burner assembly or components.

1. Turn OFF refrigerator.
2. Close the LP gas tank valve(s).

For steps 3 - 5, refer to Figure 32, page 37 (N500) or Figure 33, page 38 (N510).

3. Close the gas valve manual shutoff.
4. Remove the drip cup retaining screw, then remove the drip cup.

> ***CAUTION:***
>
> To prevent damage to connections, piping, and components, always use two wrenches to loosen the burner tube. A damaged burner tube creates a potential for gas leaks.

5. Remove the burner box cover retaining screw, then slide the burner box cover out of the way.

For steps 6 - 8, refer to Figure 17, page 23 (N500) or Figure 21, page 25 (N510).

6. Disconnect the burner tube from the orifice assembly.
7. Remove the orifice assembly from the burner.
8. Remove the burner retaining screw.
9. Remove the burner from the burner box frame.
10. Clean the burner.

> **NOTE**
>
> The burner slots may be cleaned with a small flat file. The inner bore of the burner body may be cleaned with a 3/16 in. double-spiral wire brush. Do not damage the threads when cleaning the inner bore of the burner.

> ***WARNING:***
>
> Do not insert any type of cleaning tool or wire into the orifice. Do not drill or ream the orifice opening to clean it. Insertion of any type of cleaning tools, reaming, or drilling through the opening will alter the volume of LP gas flow to the burner and create a fire hazard potential.

11. Visually inspect the orifice. If dirty, wash the assembly with alcohol, then allow to air dry. If cleaning fails to remove dirt or if the condition of the orifice assembly is questionable, replace the orifice assembly.
12. Clean dirt or debris from the burner box base.
13. Reinstall the burner. Do not overtighten the retaining screw.

> ***CAUTION:***
>
> To avoid gas leaks and prevent damage to connections, piping, and components, always use two wrenches to tighten the burner tube. A damaged burner tube creates a potential for gas leaks.

14. Install the orifice assembly. Thread the orifice assembly into the burner finger tight, then finish tightening using two wrenches.
15. Connect the burner tube. Thread the fitting finger tight, then finish tightening using two wrenches.
16. Install the burner box cover. Do not overtighten the retaining screw.
17. Install the drip cup.
18. Open the LP gas tank valve.
19. Open the gas valve manual shutoff.
20. Turn ON the refrigerator and select the GAS mode (N500) or LP Manual Mode (N510) operation.
21. Leak test LP gas connections while holding in gas safety valve (N500) or during the 30 second trial-for-ignition (N510).

> ***WARNING:***
>
> Do not attempt to repair LP gas leaks with the refrigerator in operation. Before attempting to repair a gas leak:
>
> - Turn OFF the refrigerator.
> - Close the LP gas valve and the manual shutoff/ solenoid gas valve manual shutoff.

AC Power

AC Power Requirements - All Models

AC mode operation requires 108 to 132 Vac for ac heater operation. AC power must be supplied through a 2 pole/3 wire/20 amp grounding type receptacle.

> ***WARNING:***
>
> **Do not** cut or remove the ground prong from the power cord. Do not use a two-prong adapter or an extension cord. Connect the ac power cord only to a grounded three-prong type receptacle. Operation of the refrigerator without a ground connection or with a faulty ground connection can result extensive property damage, injury, or death.

> ***WARNING:***
>
> **Electric shock hazard!** The refrigerator is fed power from more than one source. Unplug the ac cord from the RV ac receptacle before servicing electrical or electronic components.

AC Heater

> ***WARNING:***
>
> **Do not wire the heater(s) direct!** Wiring heater(s) direct bypasses control safety devices and creates the potential for an electrical fire.

The ac heater, see Figure 26, has black leads and is a cartridge type heater. The heater is rated for 200 watts/ 2.5 amps at 110 Vac. Heater resistance is 61.3 ohms. The ac heater replacement procedure is located on page 30.

AC Fuse
N500 Models

The N500 ac circuit is protected by a 5 A, 1/4 in.x 1 1/4 in. AGC type fast acting fuse housed in an in-line type fuse holder.

N510 Models

The N510 ac circuit is protected by a 5 amp fuse located on the left side of the power board. The power board cover must be removed to gain access to the fuse.

When the refrigerator operates with poor or no cooling in ac operation, but operation is present:

a. Measure ac voltage input to the power board.
b. Measure heater amp draw.
c. If amp draw is not as specified, measure the heater's resistance at ambient temperature.

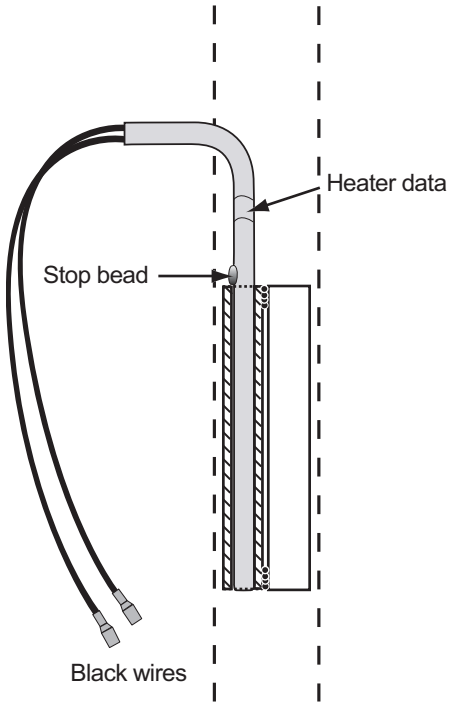

Figure 26. AC heater in heater well

When replacing an ac heater make sure the stop bead rests fully against heater tube rim. See Figure 26.

DC Power

DC Power Requirements

N500 (2-way models)

DC operation requires 12 to 15 Vdc power for relighter and ignition circuit. The ignition circuit requires 10.5 to 15.4 Vdc.

N510 (2-way models)

Electronic controls operate on 10.5 and 15.4 Vdc. A voltage drop below 10.5 Vdc or rise above 15.4 Vdc will cause the controls to set fault codes on the display. The control circuit is protected with a 5 amp automotive type fuse (located on the right side of the power board).

N500.3/N510.3 (3-way models)

For 3-way models, the controls and ignition circuit operate at 12 to 15 Vdc. The dc heater operates at 13.5 to 15.4 Vdc.

DC Heater - N500.3/N510.3

The dc heater, which has yellow leads, is shown in Figure 27, page 30. The heater is rated for 225 watts/16 amps, and requires 12 to 15 Vdc for operation. Heater resistance is 0.87 ohms.

Relighter - N500/N500.3

The relighter is a potted modular 12 Vdc circuit protected by a 1 amp 1/4 in. x 1 1/4 in. AGC type fast acting fuse housed in an in-line fuse holder. To replace the relighter, see the procedure on page 42.

WARNING:

Never use undersized wires to supply dc power to the power board. The use of undersized wires can cause low voltage and high amp draw conditions. The high amp draw caused by a circuit using undersized wires will cause the wire to overheat and creates an electrical fire hazard.

2-Way Model Wiring

18 AWG is the minimum AWG size wire that can be used for connecting dc power to 2-way models. The size fuse for overload protection must not exceed 6 amps.

3-Way Model Wiring

The distance between the RV dc power source and the power board dc power connection terminals dictates the AWG size wire that must be used. If the distance from the dc power source is:

- 20 feet or less – 10 AWG or a larger gauge wire must be used. The size fuse for circuit overload protection must not exceed 30 amps.
- Over 20 feet – AWG 8 or larger wire gauge must be used. The size fuse for circuit overload protection must not exceed 40 amps.

DC Heater–3-Way Refrigerators Only

WARNING:

Do not wire the heater(s) direct! Wiring heater(s) direct bypasses control safety devices and creates the potential for an electrical fire.

When refrigerator is in dc operation and does not maintain refrigeration and ventilation is correct:

a. Measure dc voltage input to the power board.
b. Measure the heater's amp draw.
c. If amp draw is not as specified, measure the heater's resistance at ambient temperature.

The dc heater must be inserted into the heater tube until the stop bead makes full contact with the tube's rim. The stop bead is shown in Figure 27.

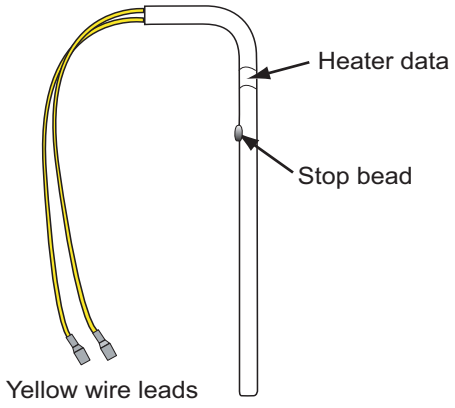

Figure 27. DC heater

DC Heater Circuit Fuse

WARNING:

Never replace a fuse with a higher amp rated fuse. Always use the specified fuse.

The N500 dc heater fuse is a 25 amp inline fuse. The N510 dc heater circuit fuse is a standard 30 amp (green) automotive blade type fuse. It is located on the power board, terminal F2.

Replacing AC or DC Heater

1. Turn refrigerator OFF.
2. Unplug ac power cord and disconnect 12 Vdc power source.
3. Disconnect heater leads.
4. Remove heater from heater well.
5. Install replacement heater in heater well, making sure that stop bead rests fully against heater well rim. Stop bead is shown in Figure 26, page 29, and Figure 27.
6. Connect heater leads.
7. Reconnect 12 Vdc power source.
8. Plug in ac power cord.
9. Place refrigerator in service.

AC Power Cord

N500 AC Power Cord

N500 models are supplied ac power through the ac power cord, which connects to the terminal block (see Figure 28). The cord's grounding prong on the ac outlet connector must be left intact and never be modified or cut. The cord's ground wire (green wire) must always be fastened to the refrigerator cabinet metal plate.

N510 AC Power Cord

N510 models are supplied ac power through the ac power cord. See Figure 29. Do not modify or cut the cord's grounding prong. Always make sure that ground wire (green wire) is tightly fastened to the refrigerator cabinet metal plate. The rounded side of the ac cord's power board connection must be connected to the power board with the rounded side facing left.

N500 Terminal Block

The terminal block is located on the back of the refrigerator in the lower left corner. See Figure 30. The terminal block receives ac power from the RV's ac outlet and dc power from the RV's dc power supply and distributes the power to the refrigerator's electrical components.

AC/DC Converter as Power Source -

N510 Only

The power board must be supplied 12 Vdc only from the filtered output (battery side) of a converter.

Unfiltered voltage (commonly referred to as ac ripple) output of ac/dc converters can cause the electronic controls to set false fault codes. It can also turn off the refrigerator or prevent the refrigerator from turning off.

NOTE

Do not use a 12 volt converter to supply power to an N500.3 or N510.3 model refrigerator. A 12 volt converter cannot supply enough power to operate the dc heater.

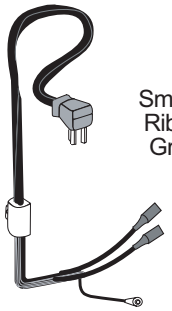

Wire leads identification

Smooth: Line (hot) lead (to terminal block terminal 2)
Ribbed: Neutral lead (to terminal block terminal 1)
Green: Ground to metal plate

Figure 28. N500 ac power cord

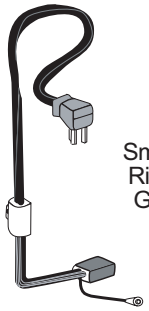

Wire leads identification

Smooth: Line (hot) lead (to power board connector)
Ribbed: Neutral lead (to power board connector)
Green: Ground to metal plate

Figure 29. N510 ac power cord

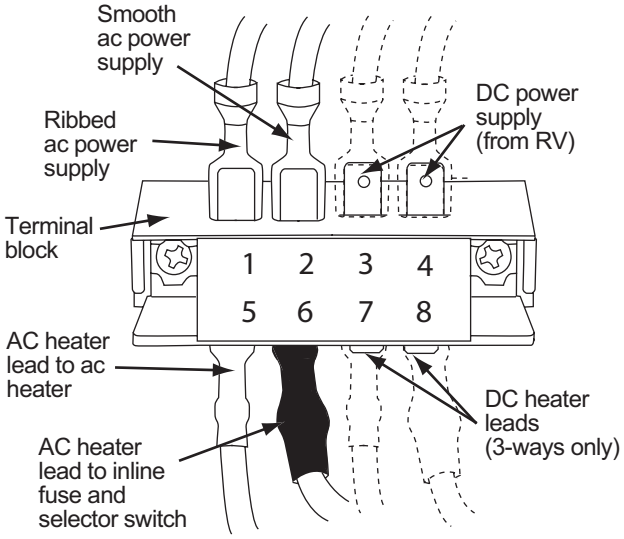

Figure 30. Terminal block and connections

COOLING UNIT

Description

The cooling unit is a self-contained gravity flow absorption refrigeration system. The refrigerant charge is a solution of water, ammonia, sodium hydroxide, and sodium chromate (a corrosion inhibitor). Refrigeration is accomplished by applying heat energy and venting the heat extracted from the freezer and fresh food cabinet while maintaining the unit leveled.

Heat Absorption

The refrigerant transfers the heat from the freezer and the food cabinet to the absorber coils. At the absorber coils the metal surface absorbs the heat and air flow over the external surfaces of the coils carries away the heat. A thermal air current is created by the rising hot air and flows out of the enclosure through the roof exhaust vent or sidewall exhaust vent (depending on installation). The flowing air mass passes over the surface of the condenser fins where it absorbs heat transferred from the ammonia vapors flowing through the condenser.

The thermal airflow process creates a "chimney effect." The fresh air drafted by the chimney effect through the intake vent removes rejected heat, supports combustion, and expels the exhaust gases produced by the combustion process. Any obstruction, restriction, or modification to vents or the enclosure will affect the cooling cycle. Poor cooling unit performance may be due to:

- Loose insulation interfering with the ventilation process.
- Construction material or debris left in the enclosure.
- Insect screening covering vents.
- Plastic sheeting covering vents.
- Items stored in the enclosure.
- Modifications to vents or enclosure.
- No roof or sidewall exhaust vent opening.

Information pertaining to ventilation and enclosure requirements appear on pages 21 and 22.

Leveled Operation

The circulation of the refrigerant through the cooling unit is accomplished by gravity flow; therefore, the refrigerator must be operated leveled. Off-level operation will effect the flow of the refrigerant through the cooling system. The maximum off-level operation limits are:

- 3 degrees from side-to-side.
- 6 degrees from front-to-back.

Exceeding the maximum off-level limits can permanently damage the cooling unit.

The cooling unit or its performance are not affected when the vehicle is in motion.

Gradual Decrease in Cooling Efficiency

A gradual decrease in cooling efficiency can be caused by the following factors:

- Ventilation obstruction.
- Heat source failure.
- Off-level operation.
- Lack of service or maintenance.
- Inadequate repairs.
- Unauthorized field modifications.
- Cooling unit failure.

Note that a gradual decrease in cooling efficiency is not always an indication of cooling unit failure. If any of these factors exist and are not corrected, a replacement cooling unit will also perform inefficiently or fail.

Step-by-step troubleshooting is the best approach when dealing with a gradual decrease in cooling. It is important to consider that the cooling unit is working, though not efficiently. A Cooling System Diagnostic Flowchart can be found on pages 34 and 35. The cooling unit must reach peak efficiency before troubleshooting can take place. It takes an average of four hours for the refrigerant to reach peak efficiency. This time frame depends on ambient air temperature.

Additionally, ambient air temperature plays a significant role if the unit was not installed correctly. Incorrect installation leads to poor ventilation, which in turn relates to poor cooling performance.

The unit's service and maintenance history should also be considered when checking a cooling unit for poor cooling performance. The service history and the scope of service work performed may lead directly to the cause and resolution of a cooling problem.

Cooling Monitoring - N510 Units Only

Cooling Monitoring monitors the fin assembly temperature through the thermistor. This control is activated when the refrigerator is turned on and when the fin assembly temperature has rises above 40° F. When the fin temperature is above 40° F and a change in cooling is not detected in a specific amount of time, the refrigeration heat sources are turned off. Cooling Monitoring will not activate if:

- The fin assembly temperature stays below 40° F.
- If the thermistor is disconnected, open, or shorted.
- If the fresh food compartment door is sensed open (resampling starts when door closes).
- The ac heater is open.
- AC voltage is low.
- Frost management is active.

Cooling Monitoring Control Operation
Cooling Monitoring operates in the following sequence:

1. Because the fin temperature is above 40° F when the refrigerator is turned ON, sampling begins when the refrigerator is turned ON and stops when the temperature falls below 40° F.
2. Monitoring activates if the fin temperature rises above 40° F while the refrigerator controls are demanding cooling.
3. Monitoring samples the fin temperature every ten minutes for a period of two hours.
4. If there is no decrease in temperature in this two-hour time period, Monitoring turns off the active refrigeration heat source.
5. After ten minutes, Monitoring restarts the heat source and monitors the fin temperature every ten minutes for another 40 minutes.
6. Within this 40-minute time period the temperature must decrease or Monitoring will turn off the refrigerator and lock out the heat sources.
7. Once the heat sources are locked out, the optical control assembly displays the “n” fault code.

First "n" Fault Code
The first time the “n” fault code (no cooling) is displayed, it can be cleared by the user by turning the refrigerator OFF and then back ON. This gives the user the opportunity to check for problems that may have caused an "n" code, such as obstructed ventilation. This fault code occurrence is then stored by the controls. If the refrigerator completes a full cooling cycle after it is turned back on, this fault code occurrence will be erased from the controls.

NOTE

An "n" fault code occurrence is not stored in the built-in diagnostic stored fault history accessible through the Diagnostic Mode. Instead it is stored in a separate, unaccessible stored fault history.

Second "n" Fault Code
If the refrigerator does not complete a full cooling cycle after the user turns the refrigerator back on, a power board reset is required. To reset the power board, see page 20.

WARNING:

Do not operate the refrigerator if the cooling unit is leaking or leakage is suspected.

Refrigerant Leakage - All Models

Yellow powder or liquid deposits at the rear of the refrigerator or ammonia smell inside the refrigerator indicate refrigerant leakage. Exercise extreme care when handling a leaking or a suspected leaking cooling unit. The cooling system refrigerant solution consists of water, ammonia, sodium hydroxide, and sodium chromate.

Disposal of Cooling Unit - All Models

WARNING:

Do not, under any circumstances, release any waste or residue from the cooling unit directly into sewers or surface waters. If any liquid leaks or spills from the cooling unit, contact the nearest environmental services for guidance.

Dispose of cooling unit according to local, state, and federal guidelines and regulations. Dispose of any liquid waste or residue according to pre-emergency planning and all applicable local, state, and federal regulations.

Any cooling system replaced under the NORCOLD warranty procedure must be returned to NORCOLD per the instructions included with the replacement system.

Cooling System Diagnostic Flowchart

> ***WARNING:***
> **Do not bypass or modify** the refrigerator's controls or components to diagnose the cooling system. Do not wire the heater(s) direct. The heater is supplied power through a fused circuit.

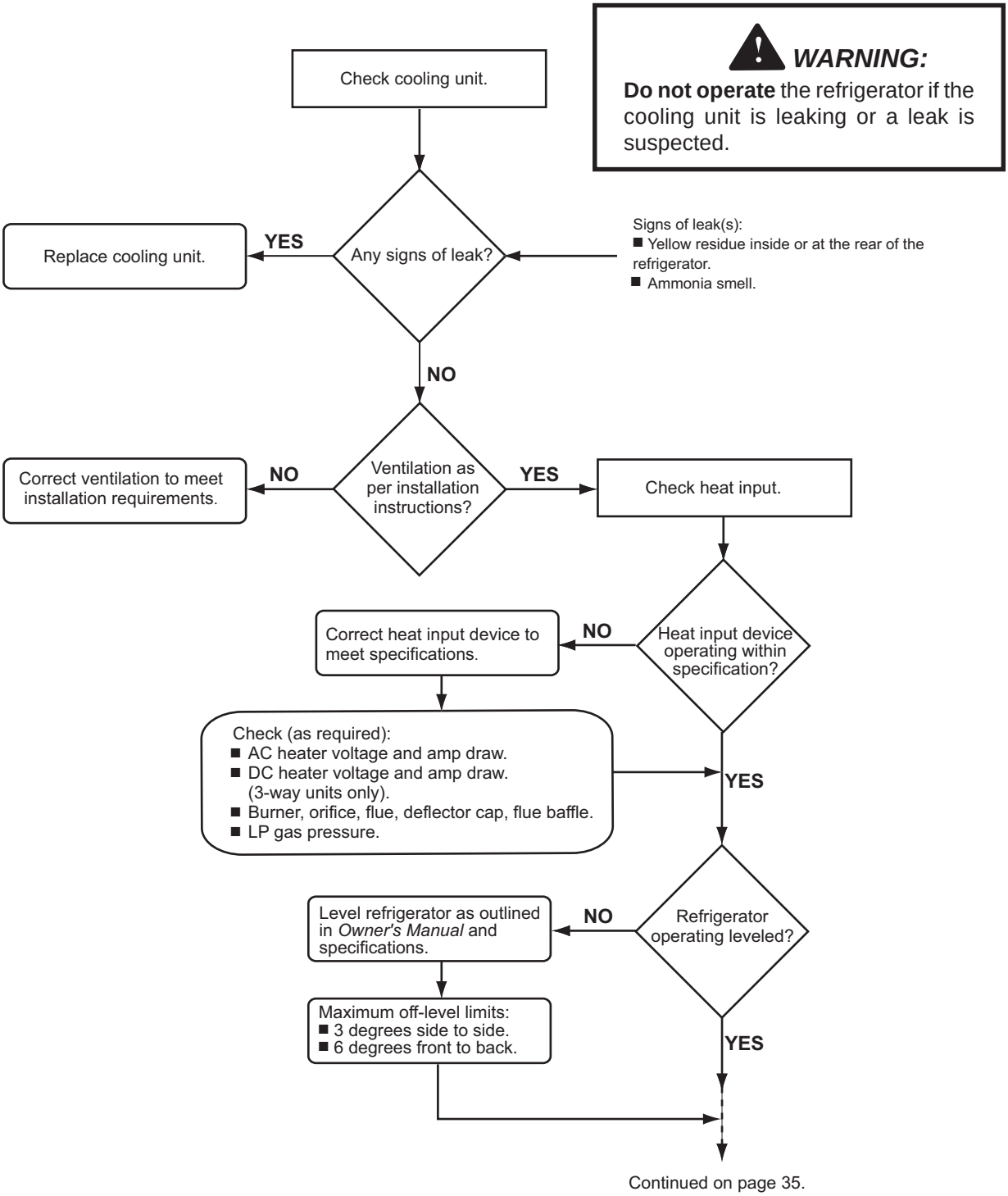

Continued on page 35.

⚠ *WARNING:*

Do not operate the refrigerator if the cooling unit is leaking or a leak is suspected.

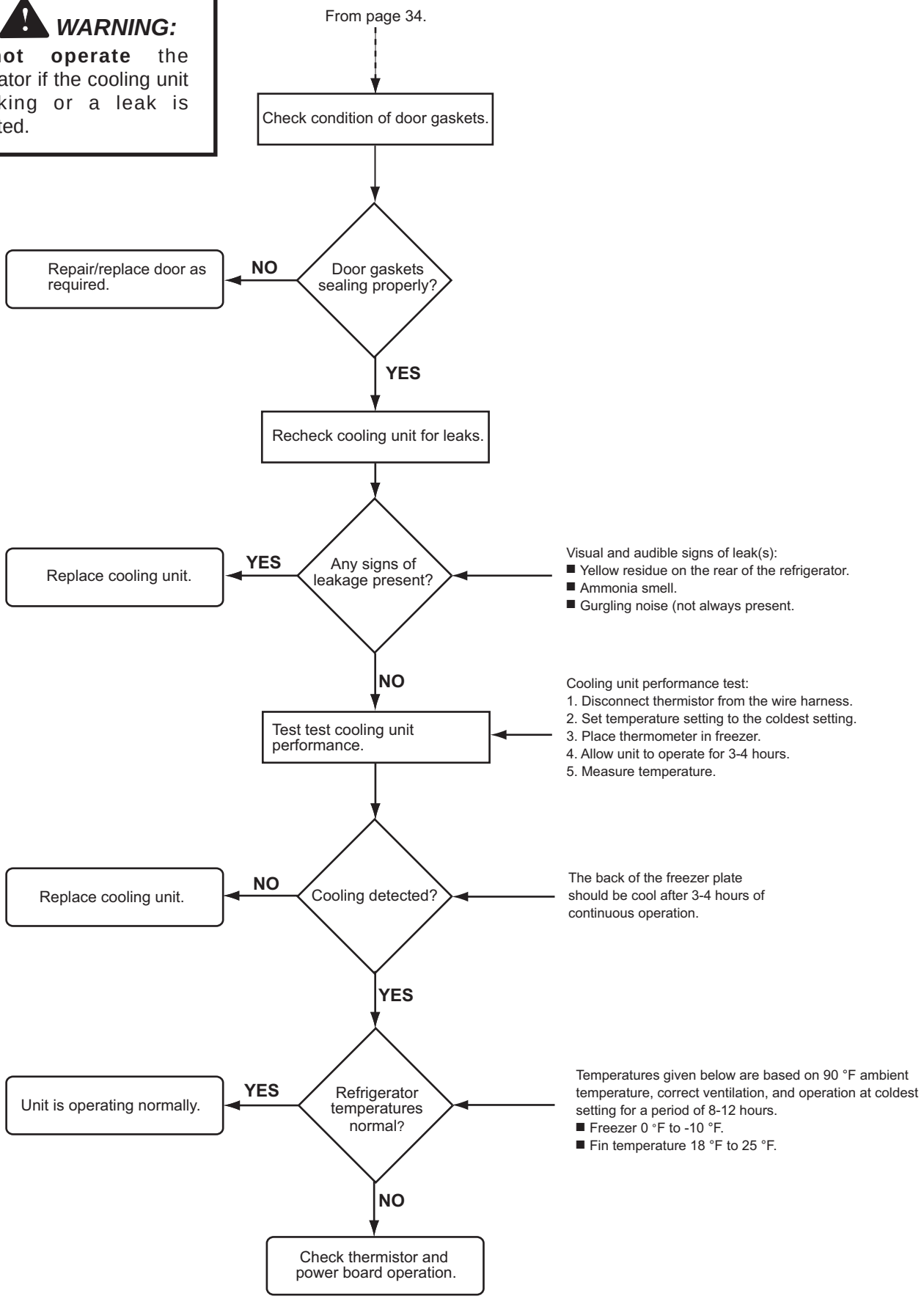

Replacing the Cooling Unit

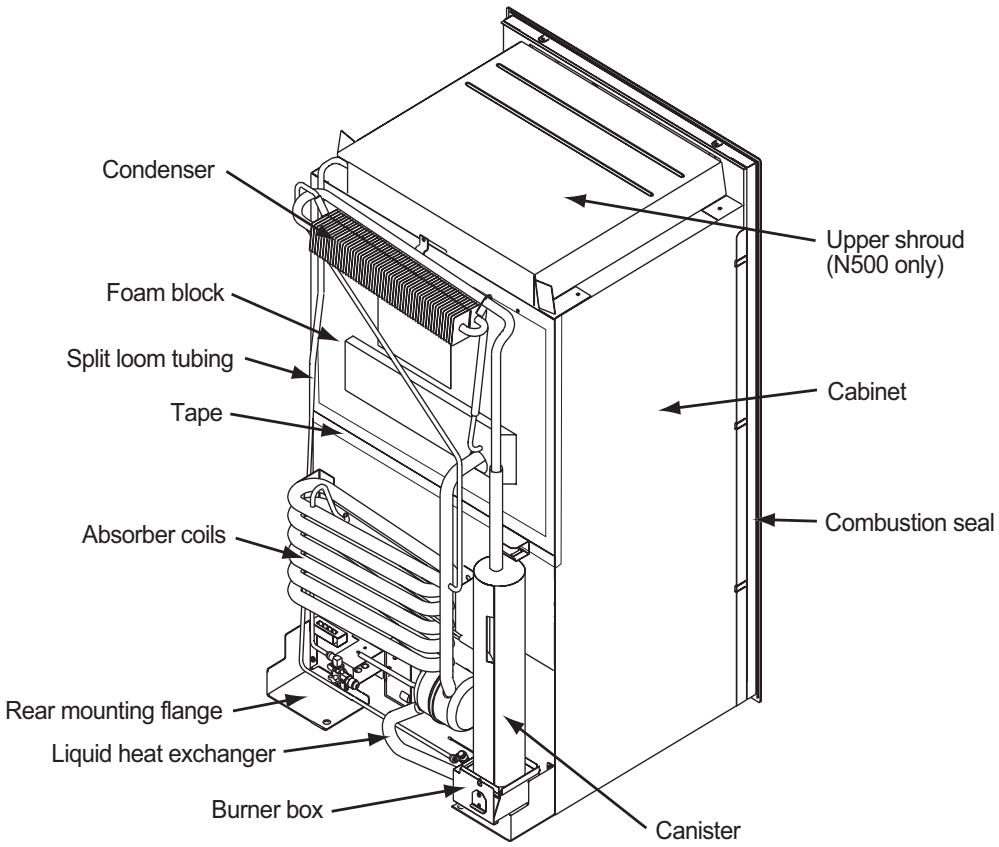

Figure 31. Cooling unit and components

NOTE

This procedure supplements the instructions packaged with N500/N510 model replacement cooling units. Follow the procedure to install the cooling unit correctly. Incorrect installation, adjustments, or modifications will affect cooling performance.

Removing the Refrigerator from the Enclosure

NOTE

Retain all parts and hardware for reinstallation.

Refer to Figures 31, 32, and 33 to locate components.

1. Close the LP gas tank valve(s).
2. Turn off gas valve manual shutoff at refrigerator.
3. Unplug the ac power cord from the RV ac receptacle.
4. Turn off RV dc power to the refrigerator.
5. Disconnect the dc power supply wires. N500 units - terminal block (3 and 4); N510 units - power board.

CAUTION:

To prevent damage to connections, piping, and components, always use two wrenches to loosen and tighten LP gas connections. Damaged connections create a potential for gas leaks.

6. Disconnect the RV LP gas supply line from the refrigerator gas valve.

CAUTION:

Some of the refrigerator's metal components have sharp corners and edges. Wear hand protection, such as cut-resistant gloves, and exercise extreme care when handling the refrigerator.

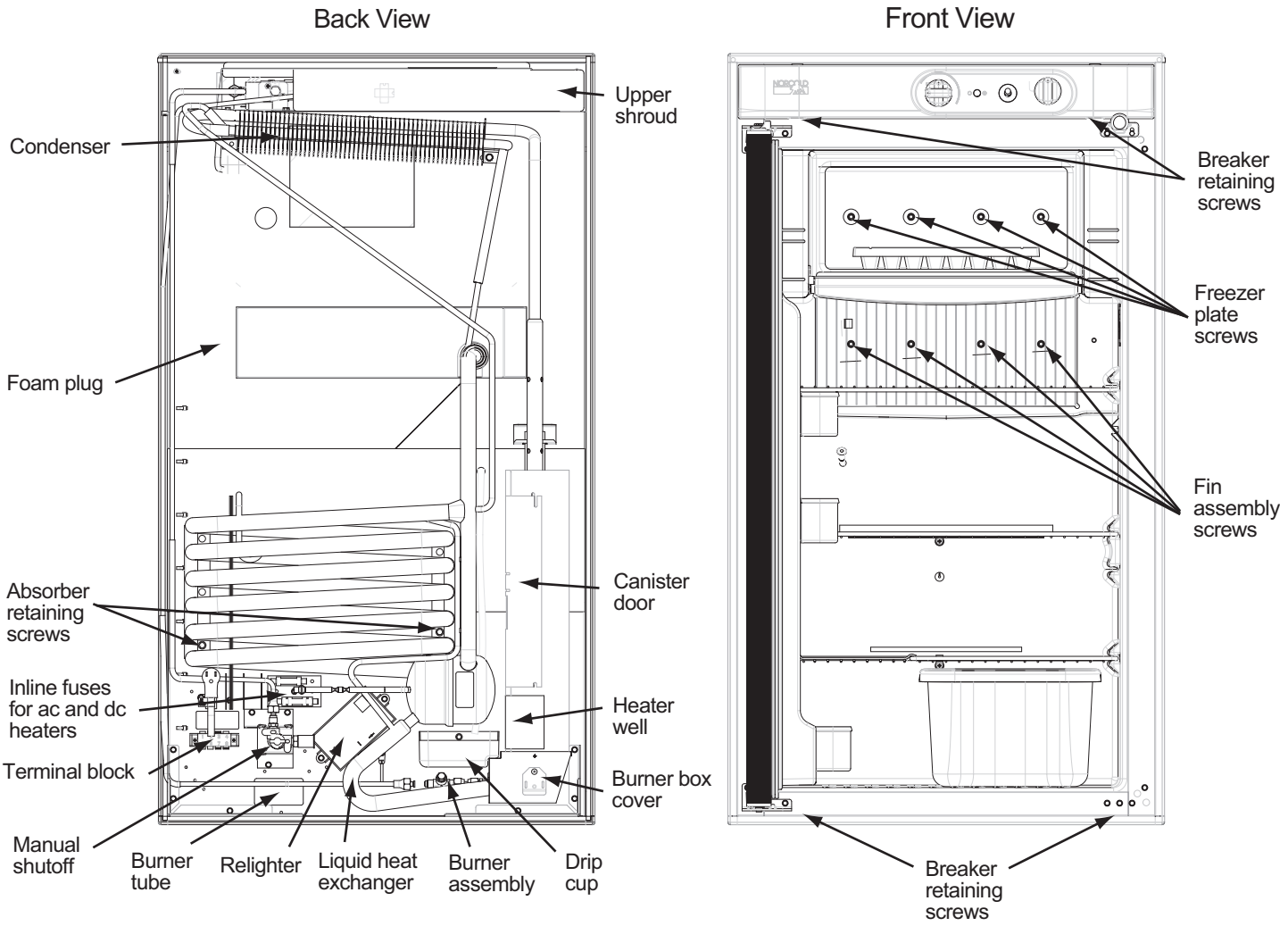

Figure 32. N500 front and back views

7. Remove refrigerator from enclosure.
   a. Remove rear mounting flange screws.
   b. Remove the breaker retaining screws.
   c. Pull refrigerator from enclosure.

Removal of Cooling Unit

Units with fan:

a. Remove fan from bracket.
b. Remove bracket.
c. Remove thermostat from the first condenser fin.
d. Remove fan wiring.

1. Remove the drip cup retaining screw, then remove the drip cup.
2. Remove the burner box cover retaining screw, then slide the burner box cover to the left.
3. Remove the spark/sense electrode assembly:
   a. Remove spark/sense electrode retaining screw, then remove the spark/sense electrode assembly from burner box with a twisting motion.
   b. Remove spark/sense electrode assembly and burner box cover from refrigerator and burner box.
4. Disconnect the burner tube from the gas valve.
5. Remove the burner assembly retaining screw, then remove the burner assembly from the burner box.
6. Disconnect the spark/sense electrode wire: N500 - reilghter; N510 - power board.

N500 units

a. Remove upper shroud.
b. Cut wire ties surrounding split loom cover.
c. Disconnect ground wire.
d. Disconnect gas supply to burner.
e. Disconnect and remove gas supply to gas safety valve/thermostat assembly.
f. Remove manual shutoff.
g. Disconnect thermocouple. See Figure 20, page 24.
h. Disconnect capillary tube from the condenser fins and thread through refrigerator cabinet.

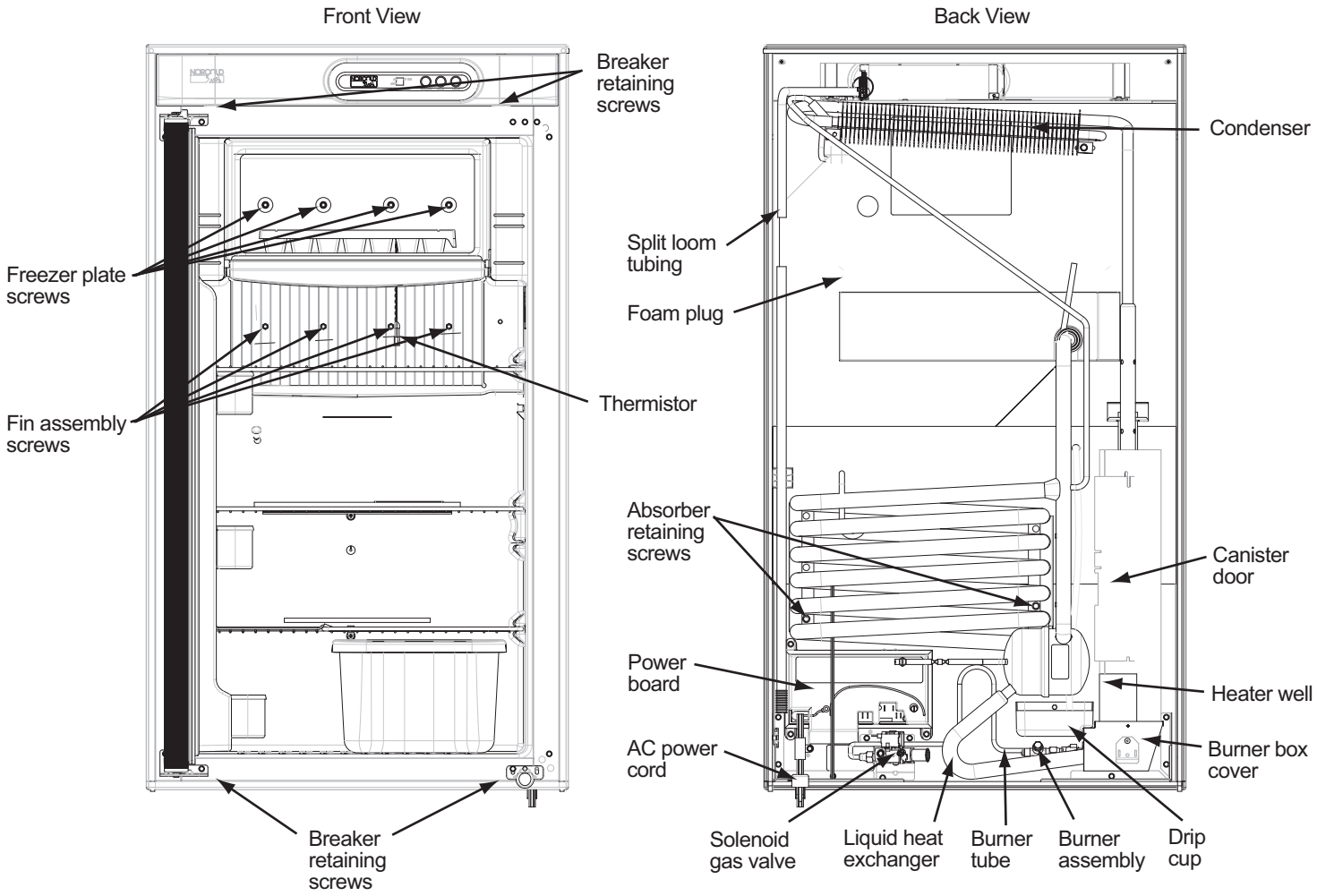

Figure 33. N510 front and back views

N510 units

a. Disconnect ac power cord from power board
b. Remove power board cover retaining screws, then remove power board cover.
c. Disconnect the gas valve wires from the power board.
d. Cut wire tie restraining gas valve wires and spark/sense electrode wire.

7. Remove the burner box retaining screws (2), then let burner box drop.

3-way units

a. Disconnect the dc heater wire leads: N500 units - terminal block and inline fuse; N510 - power board.
b. Open canister door
c. Remove dc heater.

N500 units:

a. Disconnect ac power cord from terminal block.
b. Disconnect ac heater wire from terminal block terminal 5.
c. Disconnect ac heater wire from inline fuse.
d. Open canister door.
e. Remove ac heater.

N510 units:

a. Disconnect the ac heater wires from power board terminals AC_HT-LO1 and AC_HT_HI.
b. Open canister door.
c. Remove ac heater.
d. Disconnect the thermistor wires from the P1 connector:
   1. Unplug the P1 connector from the power board.
   2. Insert a pin extractor tool (Figure 34, page 39 shows a Molex 11-03-0044 REV D) into the terminal side of connector in terminal 8. See Figure 34, page 39. Terminals are labeled on connector and thermistor wires are solid white.
   3. Remove wire from connector.
   4. Repeat steps 2 and 3 for terminal 13.
e. Remove tape securing thermistor wiring to foam plug.
f. Pull thermistor wiring through split loom tubing and into the refrigerator cabinet.
g. Remove thermistor.
h. Clip wire ties along split loom tubing.

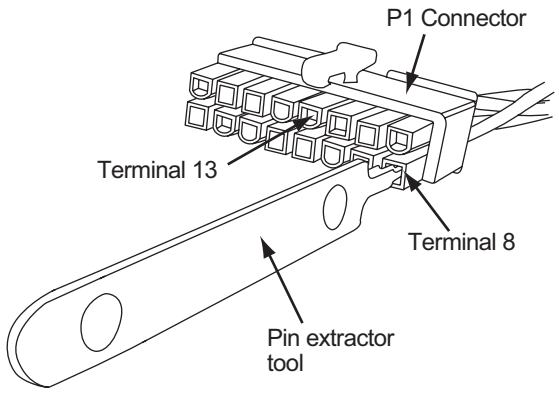

Figure 34. Disconnecting thermistor from P1 connector

8. Remove the four retaining screws and washers from the freezer plate.
9. Remove the four retaining screws from the fin assembly.
10. Cut or remove the tape around the edge of the foam plug.
11. Remove the two absorber bracket retaining screws.
12. Separate the cooling unit from the refrigerator cabinet:
    a. Grab the cooling unit by the liquid heat exchanger.
    b. Pull the cooling unit upward at a slight angle to unseat the foam plug, then pull the cooling unit from the refrigerator.

> ***CAUTION:***
> Do not overtighten retaining screws and gas fittings throughout this procedure. Overtightening screws and fittings may strip screws and fittings.

Installation of Replacement Cooling Unit.

1. Clean old sealant from back of evaporator plate, fin assembly, and cabinet step.
2. Apply a 1/2" bead of sealant to the replacement cooling unit's low and high temperature evaporators and to the foam plug. See Figure 35.

> **NOTE**
> The sealant must be applied correctly to prevent air from being drawn into the cooling unit's high and low evaporators.

> **NOTE**
> Ensure the burner box is in position at the base of the cabinet before installing the cooling unit.

3. Install the cooling unit into the refrigerator cabinet by inserting the foam plug into the cabinet step opening and pressing down firmly. The foam plug must seat evenly against the cabinet step.
4. Install the longest freezer plate screw along with washer into the third hole from the left.
5. Install the three remaining freezer plate screws and washers.
6. Install the absorber retaining screws.
7. Install the four fin assembly screws.
8. Tape the edge of the foam plug to the cabinet. Use HVAC metallic tape or heavy duty duct tape. See Figure 31.

N510 units

   a. Install thermistor on 5th fin.
   b. Thread thermistor wires through back of refrigerator cabinet and through split loom tubing.
   c. Connect wires to P1 connector terminals 8 and 13. See Figure 34 for terminal location.
   d. Plug P1 connector into power board.
   e. Tape thermistor wiring to foam plug.

Units with fan:

   a. Install fan wiring. Refer to wiring diagram on the outer surface of the fan bracket or refer to Figure 48, page 55.
   b. Install thermostat on the first condenser fin.
   c. Install bracket.
   d. Install fan onto bracket.

9. Align the burner box with the cabinet, then install burner box retaining screws.

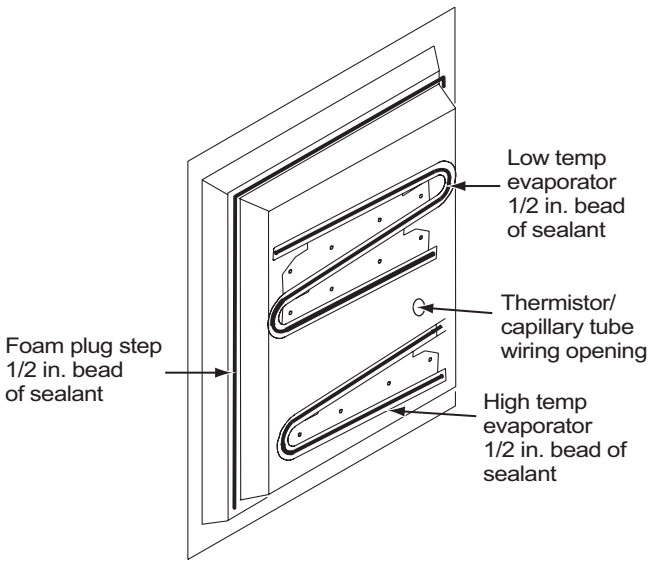

Figure 35. Application of sealant

> **CAUTION:**
> To prevent damage to connections, piping, and components, always use two wrenches to loosen and tighten LP gas connections. Damaged connections create a potential for gas leaks.

10. Install burner tube and burner assembly then install burner tube and burner assembly retaining screw.

N500 units:

a. Connect gas supply to gas valve/thermostat assembly.
b. Connect gas supply to burner.

N510 units:

a. Reconnect solenoid gas valve wiring to power board terminals GV and GV_GND.

11. Connect the burner tube to the solenoid/manual shutoff gas valve.
12. Install the spark/sense electrode assembly, then install assembly retaining screw.
13. Set electrode-to-burner gap to 3/16".
14. Align canister to install the burner box cover, then install the burner box cover retaining screw.

N500 units:

a. Connect one ac heater wire to ac heater inline fuse.
b. Connect other ac heater wire to terminal block terminal 5. See Figure 30, page 31.
c. Install ac heater.
d. For 3- way units, connect one dc heater wire to dc heater inline fuse.
e. For 3-way units, connect other dc heater wire to terminal block.
f. For 3-way units, install dc heater.
g. Close canister door.
h. Thread capillary tube through cabinet and reconnect to fin assemby.
i. Reconnect thermocouple to interrupter.
j. Reconnect ground wire.
k. Install wire ties around split loom cover.
l. Install upper shroud.
m. Reconnect ac power cord to terminal block.

N510 units:

a. Connect ac heater wires to power board terminals AC_HT-LO1 and AC_HT_HI.
b. Install ac heater.
c. For 3-way units, connect dc heater wires to the power board.
d. For 3-way units, install dc heater.
e. Close canister door.
f. Install power board cover, then install power board cover retaining screws.
g. Install power board cover retaining screws.
h. Connect ac power cord to power board.
i. Reconnect spark/sense electrode wire to power board.
j. Install wire ties along split loom tubing.

> **WARNING:**
> **Do not** install the refrigerator if the combustion seal has been damaged. A damaged combustion seal must be replace. The seal isolates the living area of the vehicle from the exhaust gases generated by LP gas combustion. LP gas exhaust gases contain carbon monoxide, which is an odorless, colorless gas that can cause dizziness, nausea, or in extreme concentrations, death.

15. Install drip cup, then install the drip cup retaining screw.

Installation of Refrigerator into Enclosure

1. Check condition of combustion seal. Replace seal if damaged.
2. Install refrigerator in enclosure. Make sure the combustion seal seats fully against the rim of the enclosure.
3. Install breaker retaining screws.
4. Install mounting flange retaining screws.
5. Connect RV LP gas supply line to gas valve inlet fitting.
6. Open the manual gas valve shutoff.
7. Plug the ac power cord into the RV ac receptacle.
8. Open the RV LP gas tank valve(s).
9. Leak test all LP gas connections manipulated throughout this procedure.
10. Place refrigerator in service.

Spark/sense Electrode - All Models

The spark/sense electrode assembly provides a spark to light the burner and monitors the presence of the flame. In N500 models, the spark/sense electrode assembly is routed through the relighter; in N510 models it is routed through the power board. See Figure 36.

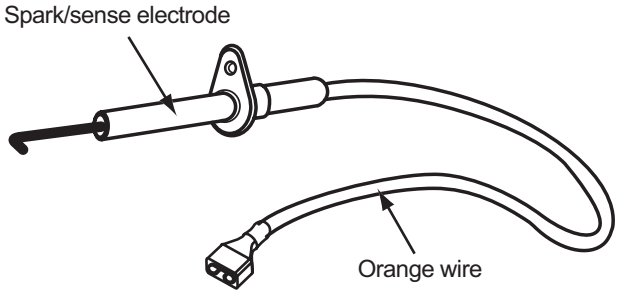

Figure 36. Spark/sense electrode

Replacing Spark/sense Electrode

1. Turn OFF refrigerator.
2. Unplug ac power cord
3. Disconnect 12 Vdc supply.
4. Close manual shutoff to LP gas supply.

> ***WARNING:***
> **Burn hazard!** Allow the burner box and burner components to cool before attempting to service the burner assembly or components.

5. Remove burner box cover retaining screw, then slide burner box cover to the left.
6. Remove electrode retaining screw then remove electrode.
7. Thread replacement spark/sense electrode wire through burner box cover.
8. Install replacement electrode, then install electrode retaining screw.
9. Install burner box cover, then install burner box cover retaining screw.
10. Connect orange spark/sense electrode wire. N500 - relighter; N510 power board.
11. Open manual shutoff to LP gas supply.
12. Reconnect 12 Vdc power supply.
13. Plug in ac power cord.
14. Place refrigerator in service.

Relighter - N500 Models

The relighter relays signals from the gas safety valve to the spark/sense electrode and to the flame indicator. It operates on 12 Vdc. See Figure 37.

Replacing Relighter

Refer to Figure 37 for component locations.

1. Turn OFF refrigerator.
2. Unplug ac power cord
3. Disconnect RV 12 Vdc supply at terminal block.
4. Close manual shutoff to LP gas supply.
5. Disconnect orange spark/sense electrode wire.
6. Disconnect 12 Vdc from relighter.
7. Disconnect ground wire.
8. Disconnect flame indicator wire.
9. Disconnect selector switch wire.
10. Remove retaining screws (2).
11. Install replacement relighter.
12. Install retaining screws (2).
13. Reconnect selector switch wire.
14. Reconnect flame indicator wire.
15. Reconnect ground wire.
16. Reconnect 12 Vdc to relighter.
17. Reconnect spark/sense electrode wire.
18. Open LP gas manual shutoff.
19. Reconnect RV 12 Vdc supply at terminal block.
20. Plug in ac power cord.
21. Place refrigerator in service.

Flame Indicator - N500 Models

The flame indicator allows the user to monitor the LP gas flame when the refrigerator is in LP Mode. The flame indicator lights indicates the existence of a flame through the relighter.

Flame Indicator Replacement

1. Turn OFF refrigerator.
2. Unplug ac power cord.
3. Disconnect 12 Vdc supply.
4. Disconnect LP gas supply.
5. Remove screws from back mounting flange (if present).
6. Remove retaining screws located on the front of breaker (will need to open door to remove).
7. Remove refrigerator from enclosure.
8. Remove wiring shroud (four screws).
9. Disconnect black indicator wire from power supply.
10. Disconnect red indicator wire from relighter.
11. Remove flame indicator.

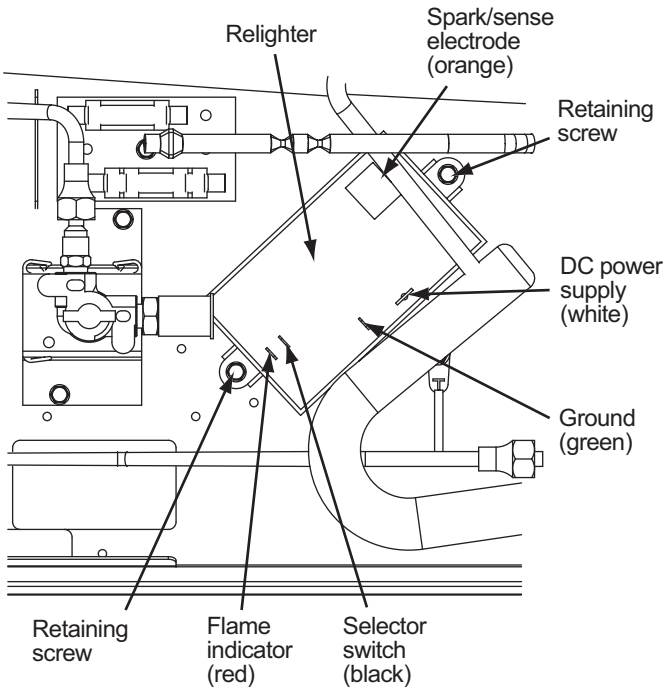

Figure 37. Relighter and connections

12. Install replacement flame indicator through the front of the control panel until it clicks into place.
13. Reconnect red and black flame indicator wires.
14. Replace wiring shroud.
15. Install refrigerator in enclosure.
16. Install front breaker retaining screws.
17. Install back mounting flange screws.
18. Disconnect LP gas supply.
19. Reconnect 12 Vdc power supply.
20. Plug in ac power cord.
21. Place refrigerator in service.

Power Board - N510 Models

Description

Inputs, outputs, monitoring, and diagnostic functions are managed and controlled by the power board. Inputs, outputs, monitoring information, and diagnostic functions are communicated through the optical control assembly. The wire harness interfacing the power board with the optical control assembly is "foamed" into the cabinet. Wiring pictorials and schematics can be found on pages 54 and 55.

NOTE

Because the wire harness is "foamed" into the cabinet, it is not a replaceable component.

The power board is located on the back of the refrigerator below the absorber coils. It is seated on an insulated base to prevent the printed circuit from making contact with the refrigerator cabinet's metal plate. The N510 power board, seated in its base, is shown in Figure 38.

Two self-tapping 1/4 inch hex head screws hold the power board and base in place. The power board cover is held by three self-tapping 1/4 inch hex head screws.

Removal–Power Board

1. Turn OFF the refrigerator.
2. Turn OFF the RV dc power to the refrigerator.
3. Disconnect dc power supply wires from power board terminals 12 VDC and 12_VGND1.

3-way refrigerators (AC/LP/DC)

a. Disconnect the DC heater wires from terminal FLP/DC HEAT and DC_HT GND.

4. Unplug the ac power cord from the RV ac receptacle.
5. Disconnect the ac cord from the power board.
6. Disconnect the gas valve wires from power board terminals GV and GV_GND.
7. Disconnect the spark sense electrode wire.
8. Remove the three 1/4 inch self-tapping hex head screws from the power board cover.
9. Remove the power board cover.
10. Disconnect the ac heater wires from power board terminals AC_HI and AC_LO.
11. Disconnect the wire harness connector from power board, terminal P1.
12. Remove the two 1/4" hex head screws attaching the board to the base, then remove the power board along with its base.

Installation–Power Board

1. Seat the power board in the base.
2. Attach the power board and base assembly to the refrigerator using two, 1/4 in. self-tapping hex head screws. *Do not overtighten screws.*
3. Connect the wire harness connector to the power board, terminal P1.
4. Connect the ac heater wires to terminals AC_HI and AC_LO.
5. Position and align the power board cover over the power board. Attach the cover using three, 1/4 in. self-tapping hex head screws. *Do not overtighten screws.*
6. Connect the solenoid gas valve wires to terminals GV and GV_GND.
7. Connect the spark/sense electrode wire to the power board high tension terminal.

3-way refrigerators (AC/LP/DC)

a. Connect the DC heater wires to power board terminals FLP/DC HEAT and DC_HT GND.

8. Connect the ac power cord to the power board.
9. Plug ac power cord into the RV ac receptacle.
10. Connect positive and the negative dc power wire leads to the power board.
    - Positive wire (**+**) to terminal 12VDC.
    - Negative wire (**–**) to terminal 12_VGND1.
11. Turn ON the RV dc power to the refrigerator.
12. Turn ON refrigerator, then check all power board control functions before placing in service.
13. Place refrigerator in service.

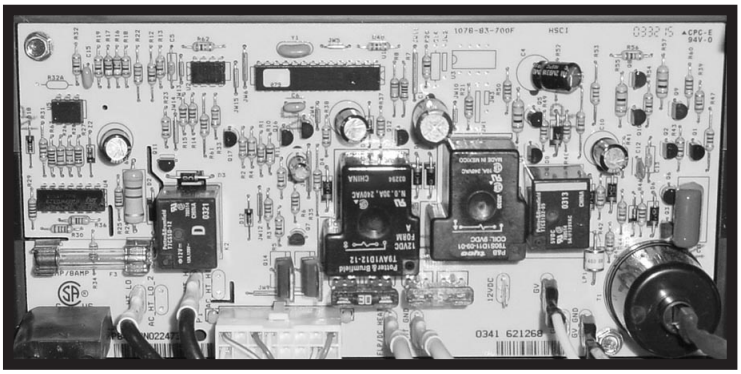

Figure 38. N510 Power Board

N500 Controls

> ***WARNING:***
>
> **Do not** hold the gas safety valve plunger in (open) for more than 30 seconds. If the burner does not ignite within 30 seconds, wait at least five minutes before attempting to relight the burner. Holding the gas safety valve plunger in (open) for more than 30 seconds will allow propane gas to pocket in and around the burner. An LP gas pocket in the burner area can cause a fire or explosion which can result in extensive property damage, burn injury and/or death.

All N500 model controls operate on 12 Vdc. The controls and their functions are shown in Figure 39.

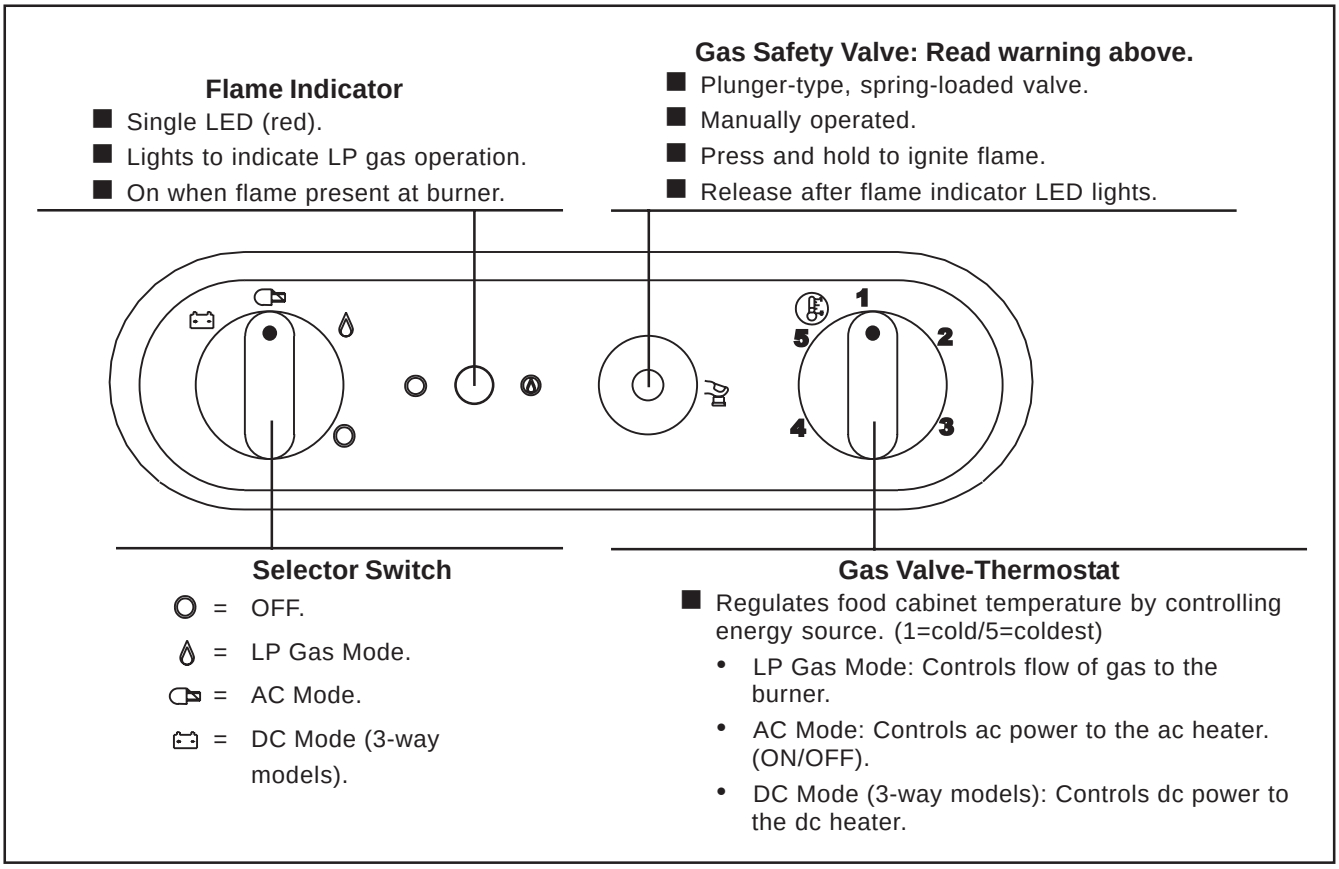

Figure 39. N500 Controls

Replacing Selector Switch - N500

1. Turn OFF refrigerator.
2. Unplug ac power cord.
3. Disconnect 12 Vdc supply.
4. Disconnect LP gas supply.
5. Remove screws from back mounting flange (if present).
6. Remove retaining screws located on the front of breaker (will need to open door to remove).
7. Remove refrigerator from enclosure.
8. Remove wiring shroud (four screws).
9. Mark selector switch wiring for ease of reinstallation. See Figure 40.
10. Remove selector switch knob.
11. Remove retaining nut from front of selector switch assembly.
12. Remove selector switch by pulling from back.
13. Remove wiring from selector switch and transfer to replacement selector switch. See diagram on switch housing and Table 2 for wiring placement.
14. Replace switch assembly into controls.
15. Install retaining nut.
16. Replace selector switch knob.
17. Replace wiring shroud.
18. Install refrigerator in enclosure.
19. Install front breaker retaining screws.
20. Install back mounting flange screws.
21. Reconnect RV LP gas supply.
22. Reconnect 12 Vdc power supply.
23. Plug in ac power cord.
24. Place refrigerator in service.

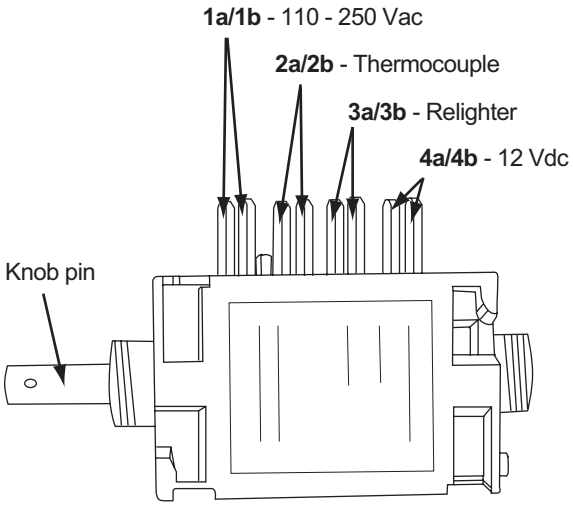

Figure 40. Selector switch wiring

Terminals	Wiring Assignment
1a - 1b	110 - 250 Vac
2a - 2b	Thermocouple
3a - 3b	Relighter
4a - 4b	12 Vdc at 20 amps (3-ways)

Table 2. Selector switch wiring chart

N510 Controls

All N510 model controls operate on 12 Vdc. The controls and their functions are shown in Figure 41.

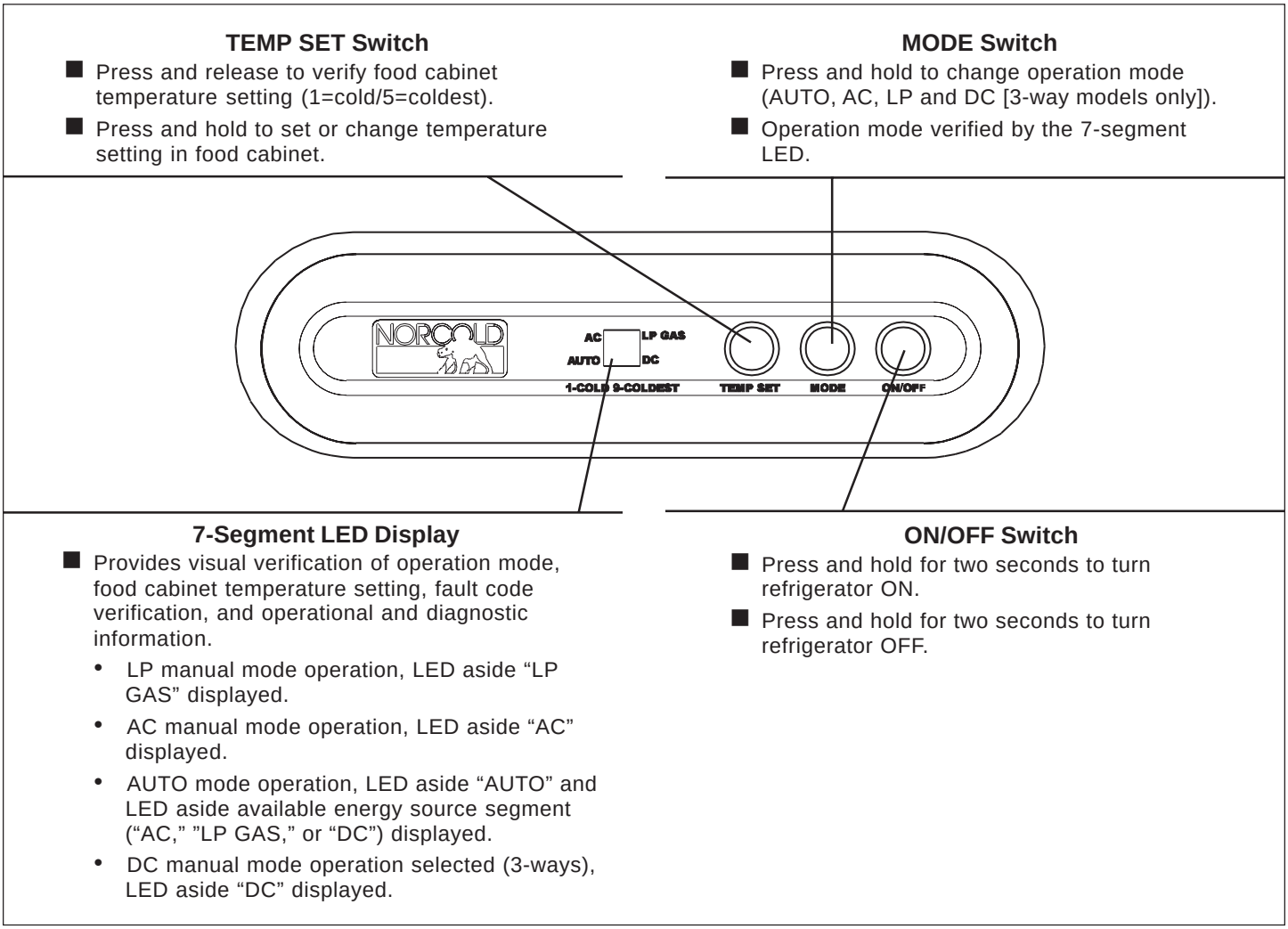

Figure 41. N510 Controls

Replacing Optical Control Circuit Board - N510

1. Turn OFF refrigerator.
2. Unplug ac power cord.
3. Disconnect 12 Vdc supply.
4. Disconnect LP gas supply.
5. Remove screws from back mounting flange (if present).
6. Remove retaining screws located on the front of breaker (will need to open door to remove).
7. Remove refrigerator from enclosure.
8. Disconnect wire harness.
9. Remove the board bracket retaining screws (2).
10. Remove board retaining screws, then remove optical control circuit board.
11. Disconnect display overlay ribbon connector from optical control circuit board. See Figure 42 and Figure 43.
12. Remove metal brackets from circuit board.
13. Transfer brackets onto new optical control circuit board.
14. Connect display overlay ribbon connector to optical control circuit board. See Figure 42.

NOTE

When connecting the display overlay ribbon connector to the circuit board, be sure to keep the flat side of the connector against the board and the side with the arrow visible. If this connector is installed incorrectly, the refrigerator will not turn on.

15. Install optical control circuit board then install the board retaining screws.
16. Install the board bracket retaining screws (2).
17. Reconnect wire harness.
18. Install refrigerator in enclosure.

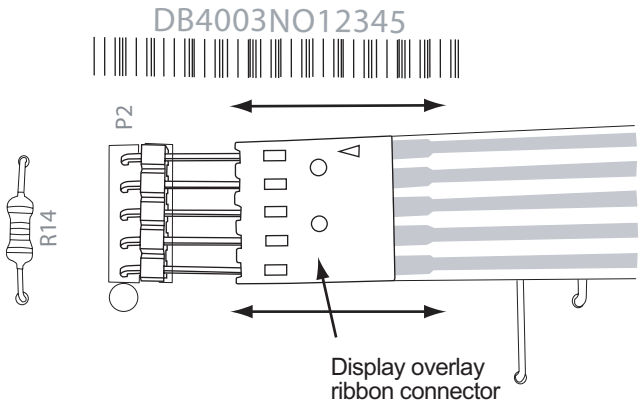

Figure 42. Connecting/disconnecting connector

19. Install breaker retaining screws.
20. Install back mounting flange screws, if present.
21. Reconnect dc power supply.
22. Plug in ac power cord.
23. Place refrigerator in service.

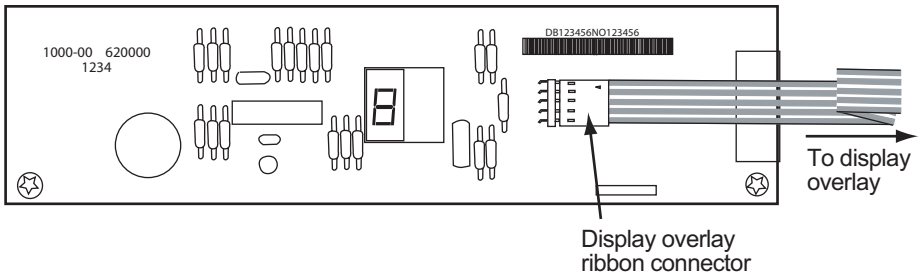

Figure 43. Optical display circuit board

N510 Modes of Operation

N510 models are designed for 2-way or 3-way operation.

AUTO Mode - All N510 Units
In AUTO mode, ac power is the first heat energy source selected by the controls. If ac power is not present, the controls shift to LP gas, the controls second priority heat energy source.

AUTO Mode – N510.3 (3-way units)
In 3-way units, if ac is not available, if a flame is not sensed, the flame goes out, or an ignition failure occurs, the controls shift to dc power, the third priority heat energy source. For additional information on 3-way units in AUTO mode, see page 49.

AUTO AC Operation
When AUTO mode is selected:

1. Mode of operation is indicated by the AUTO LED.

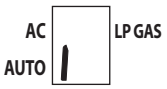

2. The AC LED comes on as the controls search for ac power availability.

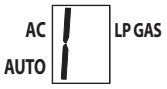

3. The AC LED turns off when ac power is detected by the controls. Mode operation is indicated by the AUTO LED. See NOTE 1

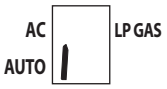

NOTE 1

In AUTO mode, pressing the MODE pushbutton momentarily displays the heat energy source in use. For example, in AUTO AC, the AC LED will come on and stay on for approximately 10 seconds.

AUTO LP Gas Operation
In AUTO mode, the controls shift to LP gas when ac power is not available or interrupted. The shift to AUTO LP proceeds as follows:

1. The AUTO LED indicates the unit is on and operating in AUTO mode.

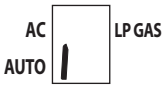

2. The AC LED comes on as the controls verify ac power availability.

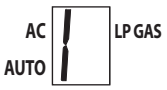

3. Since AC power is not detected, the controls shift to LP gas. The LP LED comes on to signal the start of a 30 second trial-for-ignition.

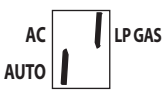

4. Once the controls sense the flame, the LP GAS LED turns off leaving the AUTO LED on to indicate AUTO mode operation.

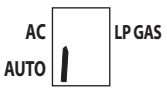

Shift from AUTO LP Gas to AUTO AC - 2-ways
In AUTO mode, the controls shift automatically from AUTO LP Gas back to AUTO AC when the controls detect that ac power has become available.

No AC Power and No Flame
When AC power is not present and a flame is not sensed, the controls:

1. Acknowledge both faults after the 30 seconds trial-for-ignition is over.
2. Shut off power to the solenoid gas valve.
3. Set "gas lock-out". See NOTE 2.
4. Provide a visual warning by flashing alternating “A” (no ac) and “F” (no flame) fault codes, shown below.



Alternating "A" and "F" Codes

5. Record and store the no ac and no flame faults in diagnostics nonvolatile memory fault history.

NOTE 2

In AUTO mode, the controls maintain "gas lock-out" until a full cooling cycle on AUTO AC is completed. Turning the refrigerator OFF and back ON also clears "gas lock-out."

Troubleshooting a "F" and "A" Faults
Use the following references to identify, troubleshoot, and correct an ignition failure and/or no ac faults.

- Page 15, "F" fault code troubleshooting flowchart.
- Page 17, "A" fault code troubleshooting flowchart.
- Page 52, Diagnostic Mode–N510 Models, Screen 4.

AUTO DC Operation – 3-Way Units Only
In AUTO DC mode, the controls shift to dc power when ac power is not present and flame is not sensed. When the controls shift to AUTO DC:

1. The AUTO mode operation indicator displays.

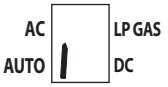

2. The AUTO and AC indicators display as the controls search for ac power.

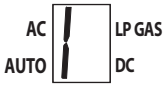

3. When ac power is not detected the controls shift to AUTO LP mode. The AUTO and LP indicators display as the controls start a 30 second trial-for ignition

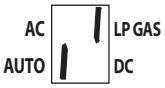

4 If a flame is not sensed the controls shift to AUTO DC Mode. The AUTO and DC indicators display as the controls search for DC power.

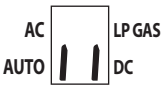

5. Once dc power is detected, the AUTO LED displays.

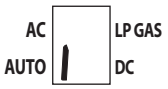

NOTE

The auto sequence described in steps 1 through 5 is repeated after the completion of each cooling cycle to enable the controls to select a higher priority heat energy source if available.

The controls priorities for selecting a heat energy source are:

- First priority: AC power.
- Second priority: LP gas.
- Third priority: DC power – 3-way units only.

NOTE

AUTO DC and DC Manual Mode maintain cooling only.

AC Manual Mode
When the AC Manual Mode is selected, ac power is the only heat energy source selected by the controls. When the AC Manual Mode is selected:

1. Mode of operation selected is indicated by the AC LED.

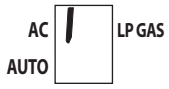

2. The AC LED stays on as long as the AC Manual Mode is selected.

No AC Power or Loss of AC Power
When no ac power is available or ac power is lost, the controls:

1. Provide a visual warning by flashing the “A” (no ac) fault code.



2. Record and store the no ac fault in diagnostics nonvolatile memory fault history.

Troubleshooting an "A" Fault
Use the following references to identify, troubleshoot, and correct a no ac fault.

- Page 17, "A" fault code troubleshooting flowchart.
- Page 52, Diagnostic Mode–N510 Model, Screen 4.

AC Power Restored
When ac power is restored, the controls:

1. Automatically restore AC Manual Mode operation.

2. Clear the "A" fault code from the screen. However, the recorded fault history will not be erased from memory.

3. Display the AC LED.

LP Gas Manual Mode
When LP Gas Manual Mode is selected, LP gas is the only heat energy source selected by the controls. When LP Gas Manual Mode is selected:

1. Mode of operation is indicated by the LP GAS LED.

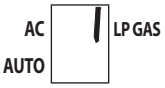

2. The LP GAS LED stays on as the flame is sensed.

Flame Fails to Ignite or Flame Goes Out
If a flame does not ignite or the flame goes out, the controls:

1. Set "gas lock-out" and shut off power to the solenoid gas valve.
2. Provide a visual warning by flashing the “F” (no flame) fault code.



3. Record and store the no flame fault in diagnostics nonvolatile memory fault history.

Clearing "Gas Lock-Out"
"Gas lock-out" can be cleared by turning the refrigerator OFF and back ON.

Troubleshooting an "F" Fault
Use the following references to identify, troubleshoot, and correct an ignition failure fault.

- Page 15, "F" fault code troubleshooting flowchart.
- Page 52, Diagnostic Mode N510 Mode, Screen 4.

DC Manual Mode: 3-Way Units Only
When DC Manual Mode is selected, dc power is the only heat energy source selected by the controls. When the DC Manual Mode is selected:

1. Mode of operation is indicated by the DC LED display.



2. The DC LED stays on as the DC Manual Mode is selected.

NOTE
AUTO DC and DC Manual Mode Maintain cooling only.

Troubleshooting a DC Fault
Use the following references to identify, troubleshoot, and correct an ignition failure fault.

- Page 16, "C" fault code troubleshooting flowchart.
- Page 16, "E" fault code troubleshooting flowchart.
- Page 52, Diagnostic Mode N510 Mode, Screen 4.

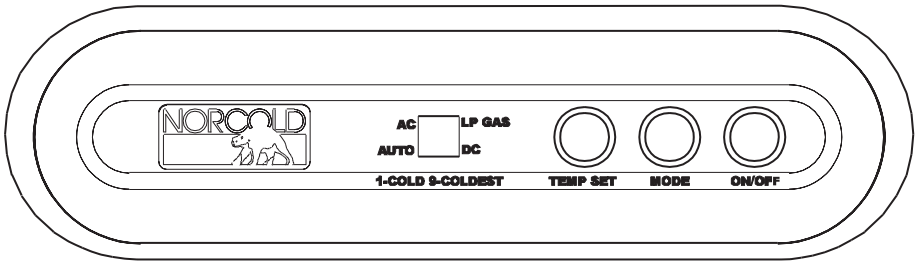

Figure 44. N510 Optical Control Assembly.

Diagnostic Mode

The Diagnostic Mode uses nine diagnostic channels, commonly known as "screens," to display "live" inputs, outputs, and fault history. Each screen is identified by a number, which shows in the optical control assembly display. See Figure 44.

The N510 optical control display uses a single 7-segment LED module to display diagnostic information. Information made up of two letters or numbers displays in an alternating sequence. Fault history information, "live" inputs, and outputs, are presented using lighted LED segments. The diagnostic LED segments, if present, display after the screen number turns off. The diagnostic LED segment's identification numbers are shown in Figure 45.

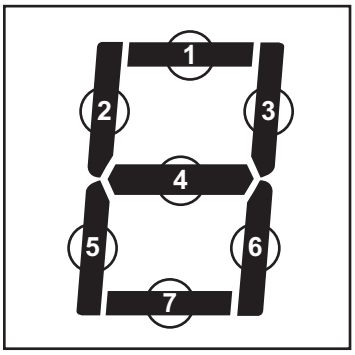

Figure 45. Diagnostic LEDs segments identification

Accessing the Diagnostic Mode

To access the Diagnostic Mode:

1. **Press** and **hold both** the MODE and TEMP SET buttons **at the same time**.
2. **Release** the MODE and TEMP SET as soon as screen [1] displays.
3. A few seconds later, [8] displays.

Changing Screens

To change screens, **press** the MODE button until the next screen displays.

Exiting the Diagnostic Mode

To exit the Diagnostic Mode:

1. **Press** and **hold** the MODE and TEMP SET buttons **at the same time**.
2. **Release** the MODE and TEMP SET buttons as soon as the LED segment that represents the selected operation mode appears on the display (AUTO, AC, or LP GAS).

Turning the refrigerator OFF then back ON also exits the Diagnostic Mode.

Screen 1 Diagnostic Mode Active

Screen 1 confirms that the Diagnostic Mode is active. A few seconds after the number displays, all LED segments light. See illustration.



If the LED segments do not match the illustration, the fault is in the optical control display. Replacing the optical control assembly should resolve this fault.

Press the MODE button to bring up screen 2.

Screen 2 LED Segments Reliability Check

Screen 2 confirms the reliability of the display. The screen should go completely blank after the screen number is displayed.



If an LED segment displays, the fault is in the optical control assembly. Replacing the optical control assembly should resolve this fault.

Press the MODE button to bring up screen 3.

Screen 3 Thermistor Fin Temperature

Screen 3 shows the actual fin temperature being sensed by the thermistor. **This is not the fresh food cabinet air temperature**. The example illustration below shows 30°F fin temperature as displayed in screen 3.

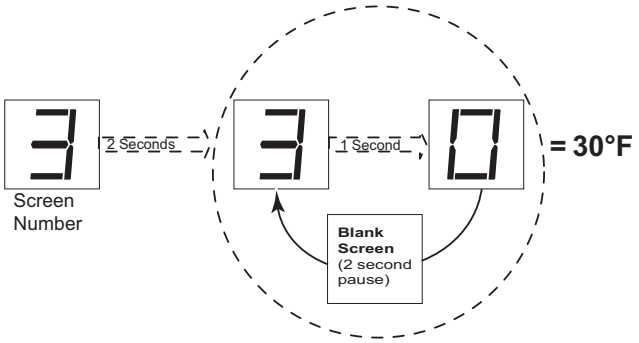

Press the MODE button to bring up screen 4.

Screen 4 Stored Fault History

Screen 4 displays stored fault history using lighted LED segments. The illustration provides fault history information and assigned LED segments. **If a fault occurred, its assigned LED will light**.

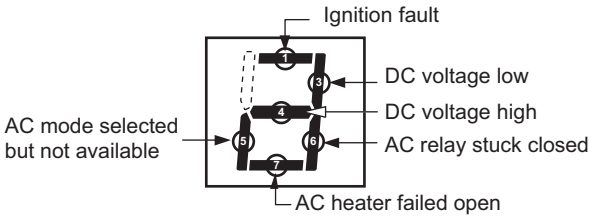

Press the MODE button to bring up screen 5.

Screen 5 Stored Fault History

Screen 5 also displays stored fault history using lighted LED segments. The illustration provides fault history information and assigned LED segments. **If a fault occurred, its assigned LED will light**.

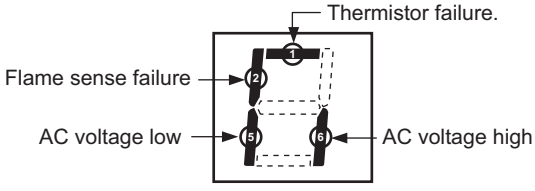

Press the MODE button to bring up screen 6.

Screen 6 Erase Fault History Data

Screen 6 provides a way to erase stored fault history from memory. To erase stored fault history:

1. Press and hold the TEMP SET button when E and r display.
2. Release the TEMP SET button when C and L display.
3. Wait five seconds.
4. Press and hold the TEMP SET button until E and r display again.

Press the MODE button to bring up screen 7.

Screen 7 Power Board Inputs

Screen 7 displays "live" power board inputs using lighted LED segments. The illustration below provides "live" inputs information and assigned LED segments. **If a power board input is active or "live", its assigned LED will light**.

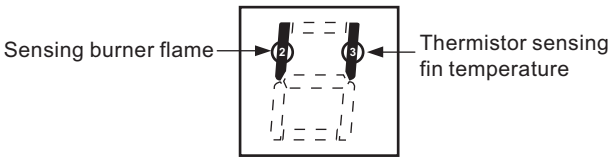

Press the MODE button to bring up screen 8.

Screen 8 Power Board Outputs

Screen 8 display "live" power board outputs using lighted LED segments. The illustration below provides "live" outputs information and assigned LED segments. **If the power board output is active or "live", the assigned LED will light**.

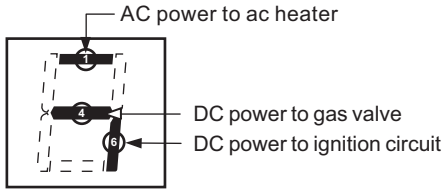

Press the MODE button to bring up screen 9.

Screen 9 Power Board DC Voltage Status

Screen 9 display power board dc voltage status using lighted LED segments. The illustration below provides dc voltage status and assigned LED segments. **If dc voltage at the power board within normal range (10.5 to 15.4 Vdc), LED segment 4 will be on**.

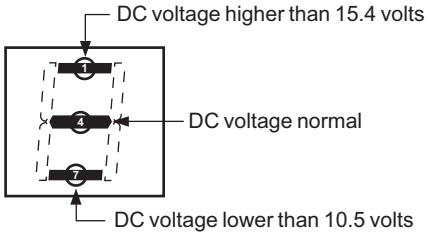

Press the MODE button to return to screen 1.

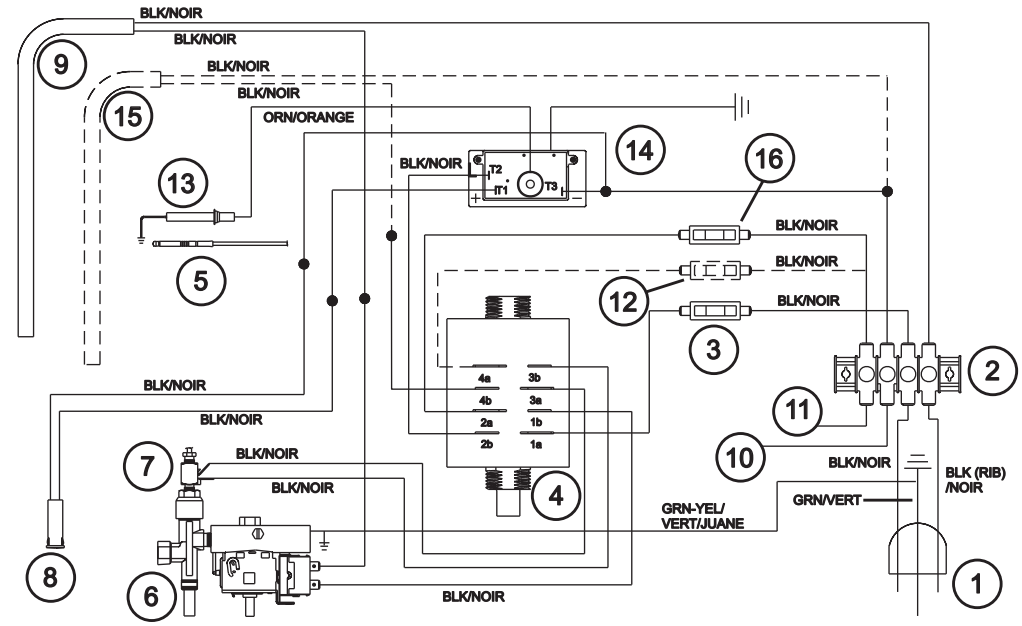

1	120 Vac power cord	7	Thermocouple interrupter	12	25 amp fuse (3-ways)
2	Terminal block	8	Flame indicator	13	Spark electrode
3	3 amp fuse	9	AC heater	14	Relighter
4	Selector switch	10	-12 Vdc power supply	15	DC heater (3-ways)
5	Thermocouple	11	+12 Vdc power supply	16	1 amp fuse
6	Thermostat/gas safety valve				

Figure 46. N500 wiring pictorial

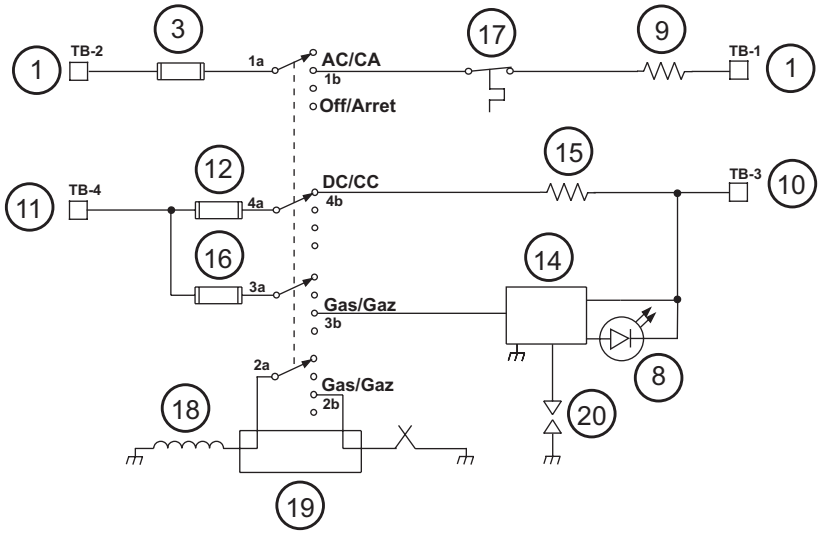

1	120 Vac	10	-12 Vdc com	16	1 amp fuse
3	3 amp fuse	11	+12 Vdc	17	Thermostat
5	Thermocouple	12	25 amp fuse (3-ways)	18	Gas safety valve
8	Flame indicator	14	Relighter	19	Thermocouple interrupter
9	AC heater	15	DC heater (3-ways)	20	Spark gap

Figure 47. N500 wiring diagram

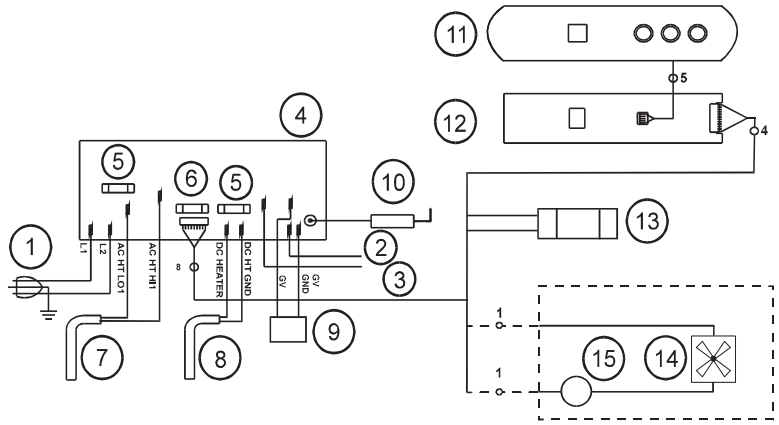

1	120 Vac	6	30 amp fuse (3-ways)	11	Display overlay
2	-12 Vdc power supply	7	AC heater	12	Optical control circuit board
3	+12 Vdc power supply	8	DC heater (3-ways)	13	Temperature sensor
4	Power board	9	Gas safety valve	14	Fan (optional)
5	5 amp fuse	10	Spark electrode	15	Thermostat (optional)

Figure 48. N510 wiring pictorial

Publication No. 626800A (06/08/04)

Publication No. 626800A (06/08/04)

NORCOLD®
P. O. Box 4248
Sidney, OH 45365-4248

NORCOLD CUSTOMER SERVICE
Telephone 1-800-444-7210
Fax 937-497-3183
World Wide Web ..... www. norcold.com/cda