Related Manuals

- Leisure CK100C210 Manual
- Leisure CK100C210 Manual
- Leisure CK100C210 Manual
- Leisure CK100F232 Manual
- Leisure CK100F232 Manual
- Leisure CK100F232 Manual
- Leisure CK100F232 Manual
- Leisure CK110F232 Manual

LEISUR

PATRICIA URQU

User Man

PAS241

Please read this manual first!

Dear Customer,

We hope that your product, which has been produced in modern plants and checke meticulous quality control procedures, will provide you with effective service.

For this, we recommend you to carefully read the entire manual of your product before it at hand for future references.

The user manual will help you use the product in a fast and safe way.

- Read the manual before installing and operating your product.
- Follow the instructions, especially those for safety.
- Keep the manual in an easily accessible place as you may need it later.
- Besides, read also the other documents provided with your product.

Please note that this manual may be valid for other models as well.

Symbols and their descriptions

This instruction manual contains the following symbols:

	Important information or useful usage tips.
	Warning against dangerous conditions for life and property.
	Warning against electric voltage.
	Packaging materials of the product are manufactured from recyclable materi-als in accordance with our National Environment Regulations.

1. Safety and environment instructions 3

2 Your refrigerator 7

3 Installation 8

3.1. Appropriate installation location 8
3.2. Installing the plastic wedges. 8
3.3. Electrical connection 8
3.4. Adjusting the feet. 9
3.5. Illumination lamp 9
3.6. Door open warning. 9
3.7. Water connection 10
3.8. Connecting the water hose to the refrigerator 10
3.9. Connecting of the water hose to the cold water mains line 11
3.10. Water filter. 12
3.11. Mounting the external filter onto the wall12
3.12. Activating water filter change warning. .13
3.13. Before starting to use the water/ice dispenser 13
3.14. Transportation of the product 14

4 Preparation 15

4.1. Things to be done for energy saving . . .15
4.2. Efficient operation 15
4.3. Recommendations on the fridge compartment. 15
4.4. Initial use. 15

5 Operating the product

5.1. Indicator panel. . . . . .
5.2. NeoFrost Cooling System .
5.3. Freezing fresh food . . . . .
5.4. Recommendations for pres food . . . . . .
5.5. Placing the food. . . . . .
5.6. Deep-freeze information. .
5.7. Chiller compartment. . . . .
5.8. Butter & cheese section .
5.9. Egg section . . . . . .
5.10. Crisper . . . . . .
5.11. Odour filter . . . . . .
5.12. Using the dispenser . . . . .
5.13. Minibar . . . . . .
5.14. Drip tray . . . . . .
5.15. Ice-maker . . . . . .
5.16 Humidity controlled crisper

6 Maintenance and clean

6.1 Avoiding bad odours. . . . .
6.2 Protecting the plastic surfa

7 Troubleshooting

1 Safety and environment instructions

This section provides the safety instructions necessary to prevent the risk of injury and material damage. Failure to observe these instructions will invalidate all types of product warranty.

Intended use

	**WARNING:** Keep ventilation openings, in the appliance enclosure or in the built-instructure, clear of obstruction.
	**WARNING:** Do not use mechanical devices or other means to accelerate the defrostingprocess, other than those recommended by the manufacturer.
	**WARNING:** Do not damage the refrigerant circuit.
	**WARNING:** Do not use electrical appliances inside the food storage compartments of the appliance, unless they are of the type recommended by the manufacturer.

1.1. General safety

- This appliance can
by children aged fr
and above and pers
reduced physical,se
mental capabilities
experience and kno
if they have been g
supervision or instr
concerning use of t
in a safe way and u
the hazards involve
shall not play with t
appliance.
- In case of malfunct
the device.
- After unplugging, w
5 minutes before p
again.
- Unplug the product
use.
- Do not touch the pl
hands! Do not pull
plug off, always hol
- Do not plug in the
the socket is loose.
- Unplug the product
installation, mainte
cleaning and repair
- If the product will n
for a while, unplug
and remove any foo
- Do not use the proc
the compartment w
cards located on th

back part of the product (electrical card box cover) (1) is open.

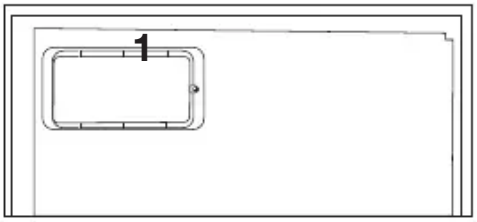

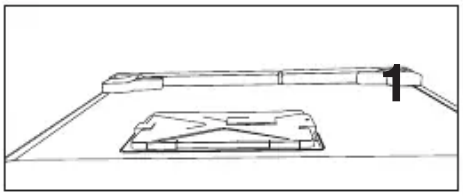

- Do not use steam or steamed cleaning materials for cleaning the refrigerator and melting the ice inside. Steam may contact the electrified areas and cause short circuit or electric shock!
- Do not wash the product by spraying or pouring water on it! Danger of electric shock!
- In case of malfunction, do not use the product, as it may cause electric shock. Contact the authorised service as soon as possible.
- Plug the product into an earthed socket. Earthing must be done by a qualified electrician.
- If the product has lighting, contact th service for replacin of any problem.
- Do not touch froze wet hands! It may your hands!
- Do not place liquid and cans into the f compartment. They
- Place liquids in upr after tightly closing
- Do not spray flamm substances near th as it may burn or e
- Do not keep flamm materials and prod flammable gas (sp the refrigerator.
- Do not place conta holding liquids on t product. Splashing an electrified part r electric shock and
- Exposing the produ snow, sunlight and cause electrical da relocating the proc pull by holding the The handle may co
- Take care to avoid part of your hands any of the moving the product.

- Do not step or lean on the door, drawers and similar parts of the refrigerator. This will cause the product to fall down and cause damage to the parts.
- Take care not to trap the power cable.

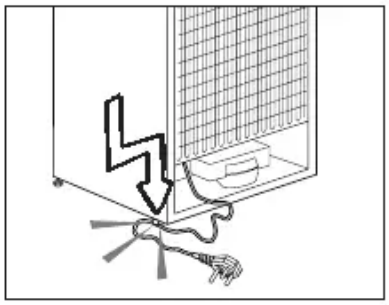

1.1.1 HC warning

If the product comprises a cooling system using R600a gas, take care to avoid damaging the cooling system and its pipe while using and moving the product. This gas is flammable. If the cooling system is damaged, keep the product away from sources of fire and ventilate the room immediately.

The label on the inner left side indicates the type of gas used in the product.

1.1.2 For models with water dispenser

- Pressure for cold water inlet shall be maximum 90 psi (6.2 bar). If your water pressure exceeds 80 psi (5.5 pressure limiting va mains system. If yo know how to check pressure, ask for th professional plumb
- If there is a risk of v hammer effect in yo installation. Consult
- Do not install on the inlet. Take precauti of the risk of freezin hoses. Water tempe operating interval s (0.6°C) minimum a (38°C) maximum.
- Use drinking water

1.2. Intended use

- This product is des home use. It is not commercial use.
- The product should store food and beve
- Do not keep sensiti products requiring temperatures (vacc heat sensitive medi medical supplies, e refrigerator.

- The manufacturer assumes no responsibility for any damage due to misuse or mishandling.

1.3. Child safety

- Keep packaging materials out of children's reach.
- Do not allow the children to play with the product.
- If the product's door comprises a lock, break off the lock when eventually disposing of the product.

1.4. Compliance with W Directive and Disposing of the Waste Product

This product complies Directive (2012/19/EU). This pr classification symbol for waste electronic equipment (WEEE).



This product has b with high quality p which can be reus for recycling. Do n waste product wit and other wastes service life. Take it center for the recycling of electr equipment. Please consult your learn about these collection cen

1.5. Compliance with RoHS Directive

- This product complies with (2011/65/EU). It does not co prohibited materials specifie

1.6. Package informati

- Packaging materials of the p manufactured from recyclab accordance with our Nationa Regulations. Do not dispose materials together with the wastes. Take them to the pa collection points designated authorities.

2 Your refrigerator

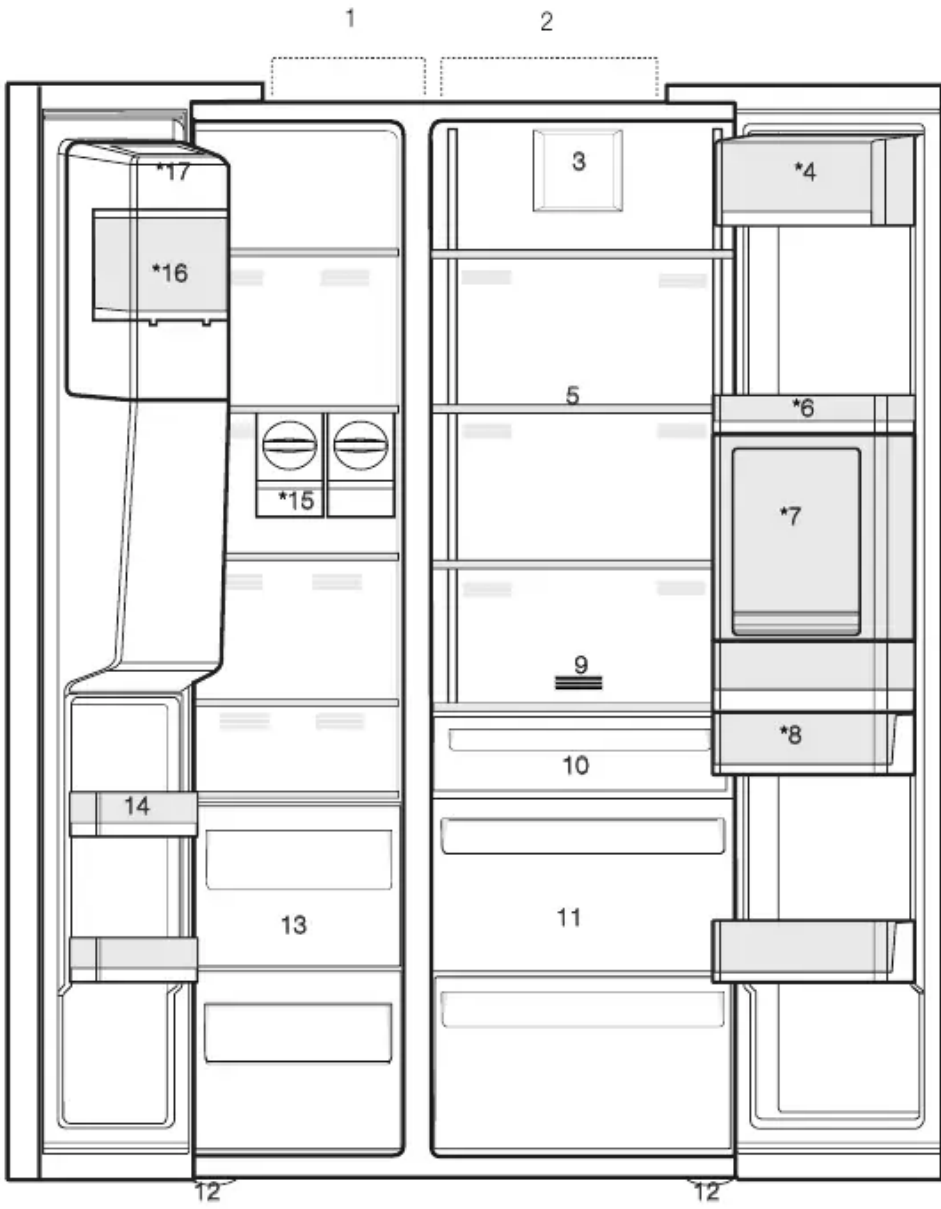

1- Freezer compartment
2- Fridge compartment
3- Fan
4- Butter-cheese compartments
5- Glass shelves
6- Fridge compartment door racks and egg compartment
7- Minibar accessory
8- Water dispenser tank
9- Odour filter
10- Chiller compartment
11- Crisper compartment
12- Adjustable feet
13- Frozen food storage compa
14- Freezer compartment door
15- Ice makers
16- Ice storage compartment
17- Ice maker decorative cover

*Optional: Figures in this user manual are schematic and may not match the the relevant parts are not available in the product you purchased, it applies to othe

3 Installation

Always have the repair procedures carried out by the Authorised Service Agent. Manufacturer shall not be held liable for damages that may arise from procedures carried out by unauthorised persons.

To make the product ready for use, make sure that the electricity installation is appropriate before calling the Authorised Service Agent. If not, call a qualified electrician to have any necessary arrangements carried out.

	Preparation of the location and electrical installation at the place of installation is under customer's responsibility.
	Product must not be plugged in during installation. Otherwise, there is the risk of death or serious injury!
	WARNING: Manufacturer shall not be held liable for damages that may arise from procedures carried out by unauthorised persons.
	WARNING: Prior to installation, visually check if the product has any defects on it. If so, do not have it installed. Damaged products cause risks for your safety.
	Make sure that the power cable is not pinched or crushed while pushing the product into its place after installation or cleaning procedures.

3.1. Appropriate installation location

	WARNING: If the door of the room where the product will be placed is too small for the product to pass, then the product's doors can be removed and the product turned aside to pass it through.

- Choose a place at where you would use the product comfortably.
- Install the product at least 30 cm away from heat sources such as hobs, ovens, heater cores and stoves. Product must not be subjected to direct sun light and kept in humid places after installation.
- Appropriate air ventilation must be provided around your product in order to achieve an efficient operation. If the product is to be placed in a recess in the wall, pay attention to leave at least 5 cm distance with the walls.
- Do not place the product on t as rugs or carpets.
- Place the product on an even prevent jolts.
- Do not install the product in p temperature falls below -5°C

	If two coolers are to be by side, there should b distance between ther

3.2. Installing the plastic wedges

Plastic wedges are used to crea for the air circulation between th the rear wall. Insert the 2 plastic rear ventilation cover as illustrat To install the wedges, remove th product and use the screws give pouch with the wedges.

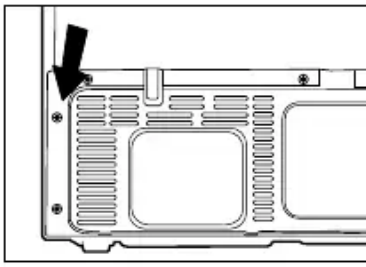

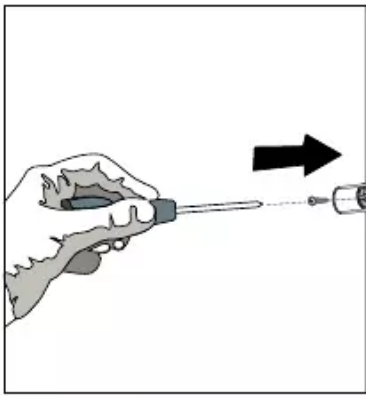

3.3. Electrical connecti

Connect the product to a groun protected by a fuse complying w the rating plate. Our company s for any damages that will arise is used without grounding in ac local regulations.

- Electrical connection must comply with national regulations.
- Power cable plug must be within easy reach after installation.
- The voltage and allowed fuse or breaker protection are specified in the Rating Plate which is affixed to interior of the product. If the current value of the fuse or breaker in the house does not comply with the value in the rating plate, have a qualified electrician install a suitable fuse.
- The specified voltage must be equal to your mains voltage.
- Do not make connections via extension cables or multi-plugs.

WARNING: Damaged power cable must be replaced by the Authorised Service Agents.

WARNING: If the product has a failure, it should not be operated unless it is repaired by the Authorised Service Agent! There is the risk of electric shock!

3.4. Adjusting the feet

If the product stands unbalanced after installation adjust the feet. Taking help from someone to slightly lift the refrigerator will facilitate this process.

WARNING: First unplug the product. Product must not be plugged in when adjusting the feet. There is the risk of electric shock!

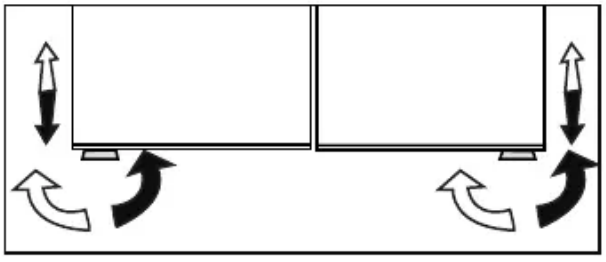

Turn the front feet to balance th
corner where the foot exists is lo
turn in the direction of arrow an
turn it in the opposite direction.

In order to adjust the doors ve

- Loosen the fixing nut at the b
- Screw adjusting nut (CW/CC

position of the door

- Tighten the fixing nut for the

In order to adjust the doors ho

- Loosen the fixing bolt on the
- Screw the adjusting bolt (CW according to the position of
- Tighten the fixing bolt on the position

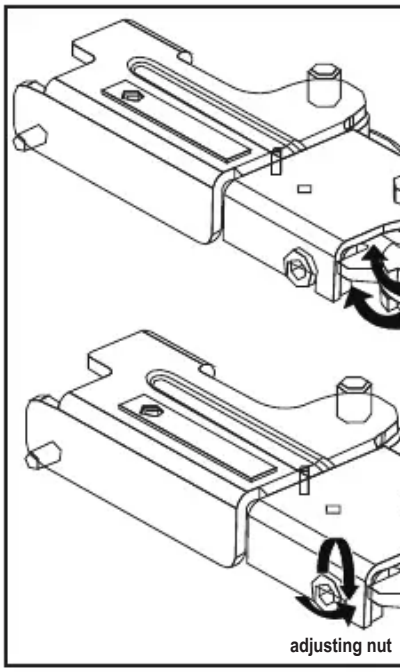

3.5. Illumination lamp

Do not attempt to repair yourself
Authorised Service Agent if the L
lamps do not go on or are out of

3.6. Door open warning

(This feature is optional)

An audio warning signal will be g
door of your product is left open
warning will be muted when the
any of the display buttons (if any

3.7. Water connection

(This feature is optional)

Water system installation of the refrigerator must be performed by a competent person.

Depending on the model of the refrigerator, you may not have to connect to water main.First you must connect the water hose to the refrigerator.

Check that following parts have been delivered together with the product:

1. Union for connecting the water hose to the rear of the refrigerator
2. 3 pieces of pipe clips (used to secure the water hose)
3. 5-meter long water hose (1/4 inch in diameter)
4. (4) Cold mains water valve with mesh filter (tap adapter)
5. (5) External water filter.

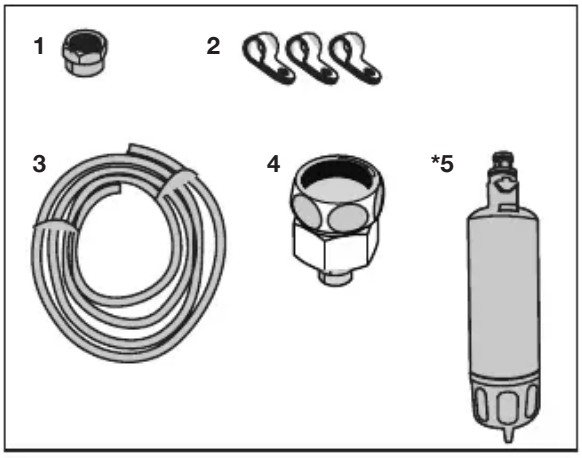

3.8. Connecting the wa hose to the refrigerator

1. Slip the union (b) onto the wa
2. Push the water hose downwa onto the water inlet valve (c).

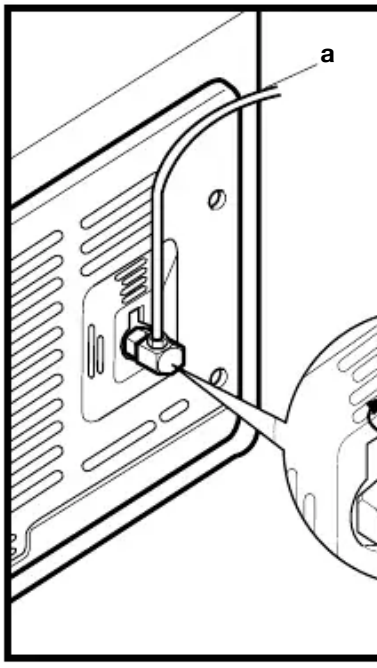

3. Tighten the union (c) by hand water inlet valve.

Normally, you are not the union with a tool. a spanner or pliers to there is a leakage.

3.9. Connecting of the water hose to the cold water mains line

(This feature is optional)

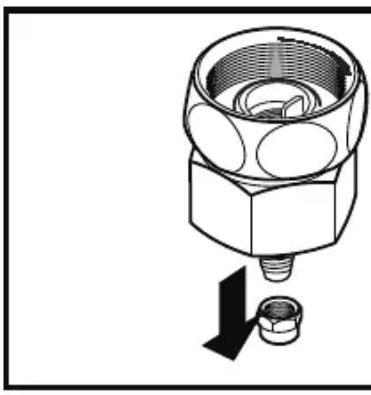

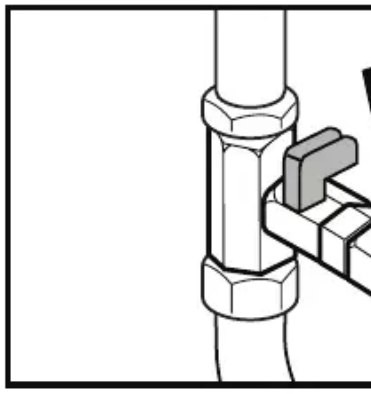

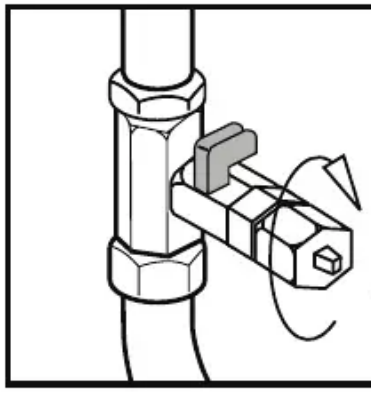

If you will use the refrigerator by connecting it to the cold water mains line, you must install a standard 1/2" valve connector to the cold water installation of your home. If this valve is not present or you are not sure, consult a qualified plumber.

1. Separate the union from the tap adaptor.
2. Install the tap adaptor to standard 1/2” valve connector.
3. After inserting the water hose to the union, install it to the tap adaptor and insert to the union to the tap adapter.
4. Tighten the union by hand.

⚠	**WARNING:** Secure the water hose to suitable points by means of the clips supplied to avoid any damage or displacement or accidental disconnection.
⚠	**WARNING:** After turning on the water valve, make sure that there is no leakage at both connection points of the water hose. If there is a leakage, turn off the valve immediately and tighten all joints again using a spanner or a pliers.
⚠	**WARNING:** Make sure that standard 1/2" valve connector is available and completely turned off on your cold water mains line.

3.10.Water filter

(This feature is optional)

Your refrigerator may be equipped with an external or internal filter depending on its model. To fit the water filter, follow the instructions below referring to the figures supplied:

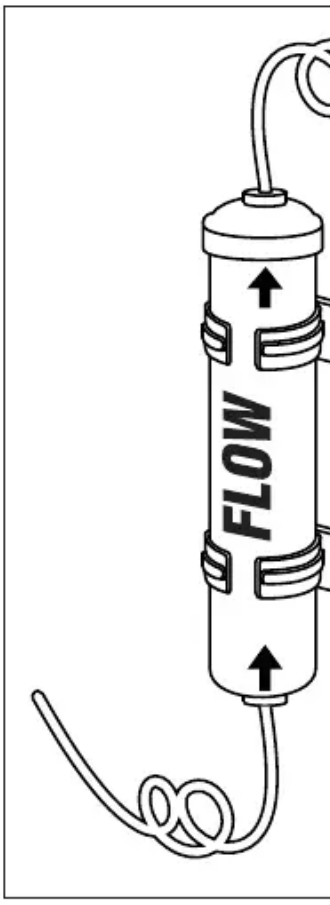

3.11.Mounting the external filter onto the wall

1. First, determine the location to mount the external filter.
2. Then, determine the distance between the filter and the tap and filter and the water inlet respectively. Prepare hoses at required lengths.
3. Mount the filter connection kit onto the wall by using a screwdriver and attach the filter.

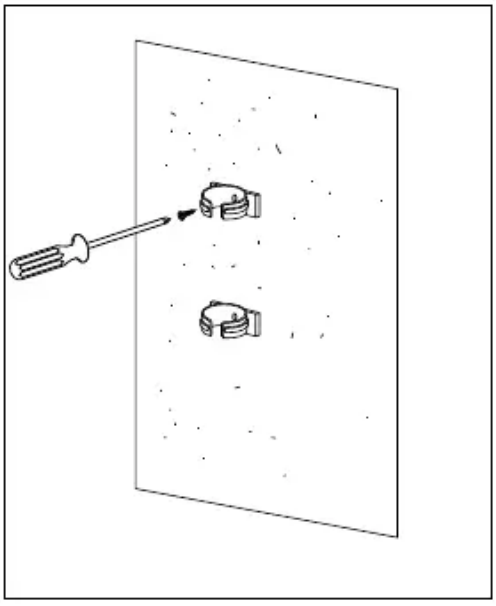

After connecting t
consume the first
water.

WARNING: N
onto the refrigerator
be pierced!

WARNING: Water filter must be held upright as shown in the figure. It is critical to connect the water inlet and outlet hoses on the filter correctly.

3.12.Activating water filter change warning

(For products connected to the mains water line and equipped with filter)

Water filter change warning is activated as follows:

1. Within 60 seconds after switching on the refrigerator, press and hold the Display and Vacation buttons for 3 seconds.

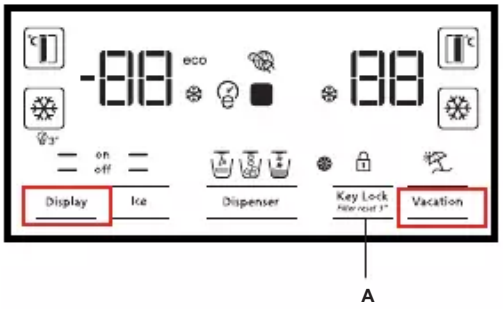

2. Then enter 1-4-5-3 as password.

Confirming the entered password

Selecting the password numbers

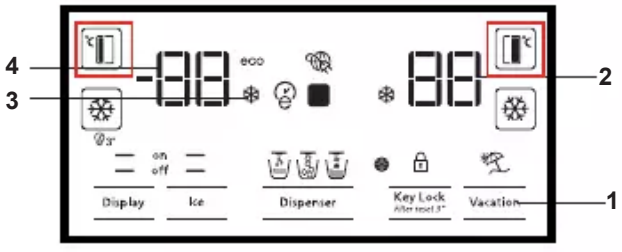

Enter 1-4-5-3 as follows:

Press FF set button for once.

Press FRZ set button for once.

Press FF set button for 4 times.

Press FRZ set button for once.

Press FF set button for 5 times.

Press FRZ set button for once.

Press FF set button for 3 times.

Press FRZ set button for once.

If the password is entered correctly, buzzer will sound shortly and Filter Change Warning indicator will turn on.

Automatic filter usage time calculat
ex factory.

It must be enabled in products equ
The refrigerator will give filter chan
6-month intervals automatically.

If the same procedure is repeated v
filter usage time calculation is enab
function will be canceled.

3.13.Before starting to u the water/ice dispenser

(This feature is optional)

- If the water pressure is below separate pump may need to
- Water system of the refrigera connected to the cold water connected to hot water line.
- No water may be obtained in up of the refrigerator. Becaus the system. To discharge air press dispenser latch for 1-2 water comes from the disper may be irregular at the begin air in the system is discharge return to normal.
- During initial use, you will ha approximately 12 hours for th down.
- It will take around 1-2 days f produce the full amount of ic
- Water pressure must be betw the operation of ice/water dis For this, check that 1 glass c can be filled in 10 seconds.
- The first 10 glasses of water consumed.
- You must wait approximately obtain ice from the ice dispe time. If there is not enough ic container, ice may not be obt dispenser.
- Do not consume the first 30 of ice cubes.
- First several glasses of water when the filter is used for the Therefore, do not consume th glasses of water.

- If the water dispenser is not used for a long period of time, first 1-2 glasses of water can be not so cold.
- If a power outage or a temporary failure occurs while the refrigerator is operating, ice can melt down a little bit and then get frozen again. In such a case, ice cubes can stick to each other. If the outage or failure prolongs, ice can melt down causing water leakage. If you experience such a problem, empty and clean the ice container.
- Ice cubes can stick to each other if they are left in the container for a long time.
- If the product is to be connected to the water mains, make sure that you use potable water.
- Water system of the product is designed to operate only with water. Do not use beverage such as soft drinks and/or juices in the water system.
- It is recommended that the water is disconnected if you will not be using the refrigerator for a long period of time due to vacation or similar reasons.
- Do not attempt to dismantle the ice container group assembly parts.
- Do not attempt to clean the ice container assembly without removing it from the refrigerator.



Packaging must be ad
of transportation printe
must be followed.



Original packaging and
should be kept for futu



WARNING: Pack
are dangerous for the
packaging materials in
from reach of the child

3.14.Transportation of the product

1. Unplug the product before transporting it.
2. Remove water connections.
3. Secure the shelves, accessories, crisper and etc. in the refrigerator by adhesive tape before repackaging it.

4 Preparation

4.1. Things to be done for energy saving

Connecting the product to electric energy saving systems is risky as it may restrict operation of the product.

- Do not leave the doors of your refrigerator open for a long time.
- Do not put hot food or drinks in your refrigerator.
- Do not overload the refrigerator. Cooling capacity will fall when the air circulation inside is hindered.
- Do not place the refrigerator in places subject to direct sunlight. Install the product at least 30 cm away from heat sources such as hobs, ovens, heater cores.
- Store your food in refrigerator in closed containers.
- Thawing frozen food in fridge compartment will both provide energy saving and preserve the food quality.

The ambient temperature of the room where you install the refrigerator should at least be 5°C. Operating your refrigerator under cooler conditions than this is not recommended.

Inside of your refrigerator must be cleaned.

If two coolers are to be installed side by side, there should be at least 4 cm distance between them.

4.2. Efficient operation

Specified energy consumption value of your refrigerator is determined under maximum load by removing the freezer compartment upper rack and while other racks and two bottom drawers are in place. there is no harm to remove a shelf or drawer to accommodate the shapes and size of food to be frozen.

4.3. Recommendations the fridge compartment

- Do not allow the food to touc temperature sensor in fridge To allow the fridge compartm ideal storage temperature, se be hindered by food.
- Do not put hot food and beve product.

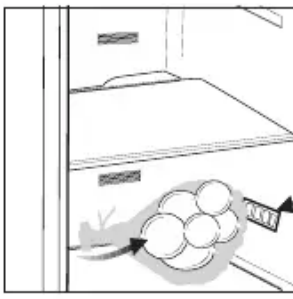



4.4. Initial use

Before starting to use the produc preparations are made in accord instructions in sections "Importa for safety and environment" and

- Clean the interior of the refri recommended in the “Mainte cleaning” section. Check tha dry before operating it.
- Plug the refrigerator into the outlet. When the door is oper illumination will turn on.
- Run the refrigerator without for 6 hours and do not open absolutely necessary.

Preparation

	You will hear a noise when the compressor starts up. The liquids and gases sealed within the refrigeration system may also give rise to noise, even if the compressor is not running and this is quite normal.
	Front edges of the refrigerator may feel warm. This is normal. These areas are designed to be warm to avoid condensation.

5 Operating the product

5.1. Indicator panel

Indicator panels may vary according to the product model.

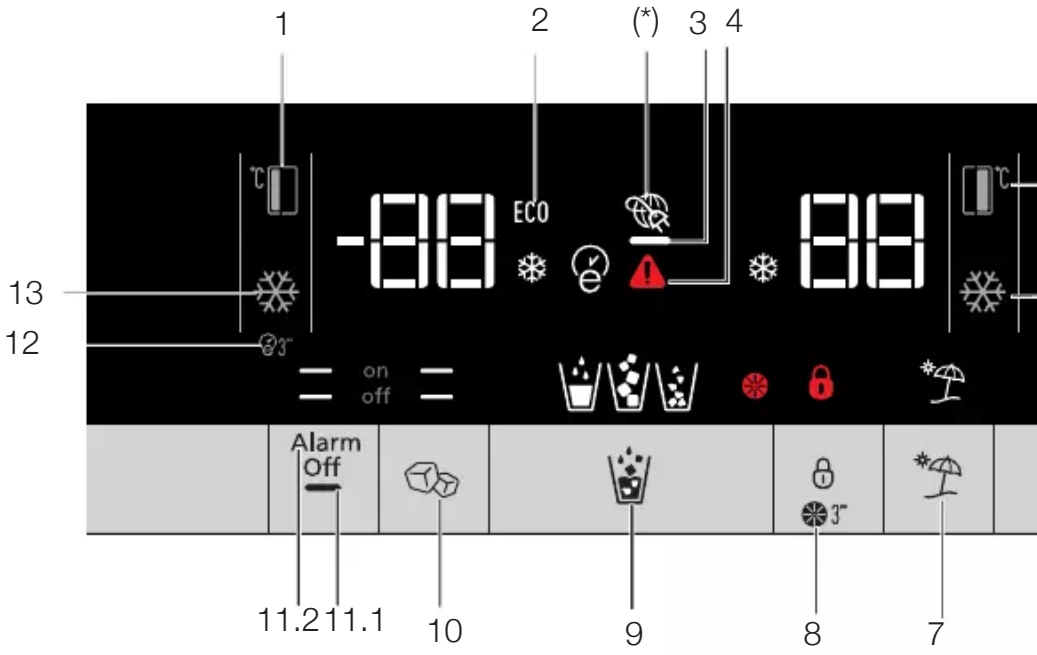

1. Freezer compartment temperature setting
2. Economy mode
3. Energy saving function (display off)
4. Power failure/High temperature / error warning indicator
5. Cooler compartment temperature setting
6. Rapid cooling
7. Vacation function
8. Keypad lock / filter replacing alert cancellation
9. Water, fragmented ice, ice cubes selection
10. Ice making on/off
11. Display on/of**/**Alarm off warning
12. Autoeco
13. Rapid freezing

*Optional**:**Figures in this user manual are schematic and may not match the pr
subject parts are not included in the product you have purchased, then those parts
models.

Operating the product

1. Freezer compartment temperature setting

Pressing the button ( ) will enable the freezer compartment temperature to be set at -18,-19,-20,-21 ,-22,-23,-24,-18...

2. Economy mode

Indicates the refrigerator is running on energy-saving mode. This indicator will be active when the freezer compartment temperature is set at -18 or the energy-saving cooling is engaged by eco-extra function. (ECO)

3.Energy saving function (display off)

If the product doors are kept closed for a long time energy saving function is automatically activated and energy saving symbol is illuminated. When energy saving function is activated, all symbols on the display other than energy saving symbol will turn off. When the Energy Saving function is activated, if any button is pressed or the door is opened, energy saving function will be canceled and the symbols on display will return to normal.

Energy saving function is activated during delivery from factory and cannot be canceled.

4. Power failure/High temperature / error warning indicator

This indicator ( ) will light up in case of temperature faults or fault alerts. If you see this indicator is lit up, please see the "recommended solutions for problems" section in this guide.

This indicator illuminates during power failure, high temperature failures and error warnings. During sustained power failures, the highest temperature that the freezer compartment reaches will flash on the digital display. After checking the food located in the freezer compartment press the alarm off button to clear the warning.

Please refer to "remedies advised for troubleshooting" section on your manual if you observe that this indicator is illuminated.

5. Cooler compartment temperature setting

After pressing the button ( ), the cooler compartment temperature can be set to 8,7,6,5,4,3,2.. respectively.

6. Rapid cooling

For rapid cooling , press t
activate the rapid cooling indic
Press this button again to dea
Use this function when plac
the cooler compartment or
food items. When this functi
refrigerator will be engaged fo

7. Vacation function

When the Vacation function
cooler compartment temperatu
the inscription "- -" and no co
active in the cooling compartm
not suitable to keep food in the
Other compartments will rem
respective temperature set for
Press the vacation function b
this function. ( )

8. Keypad lock / Keypad lock alert cancellation

Press keypad lock button ( ) to
lock. You may also use this functi
changing the refrigerator's tempe
refrigerator's filter must be repla
If you follow the instructions in th
refrigerator will automatically cal
period and the filter replacing ale
light up when filter expires.

Press and hold the button ( ) fo
off the filter alert light.

9. Water, fragmented ice, i

Navigate the water ( ), ice cu
fragmented ice ( ) selections
number 8. The active indicator

10. Ice making on/off

Press the button ( ) to canc
activate (on —) ice-makin

11.1 Display on/off

Press the button (— off
activate (— on) display

11.2 Alarm off warning

In case of power failure/high temperature alarm, after checking the food located in the freezer compartment press the alarm off button to clear the warning.

12. Autoeco

Press the auto eco button (3"), for 3 seconds to activate this function. If the door remains closed for a long time when this function is activated, the cooler section will switch to economic mode. Press the button again to deactivate this function.

The indicator will light up after 6 hours when the auto eco function is active. ()

13. Rapid freezing

Press the button () for rapid freezing. Press the button again to deactivate the function.

5.2. NeoFrost Cooling System

Thanks to the two separate cooling systems, cooling speed is much faster than traditional refrigerators. Air in the fridge is kept with optimal humidity which is essential for fruit and vegetables and the freezer maintains a dry environment. Odours are also not transferred from the fridge to freezer and vice versa.

5.3. Freezing fresh food

- Wrap the food or place them in a covered container before putting in the freezer.
- Hot food and beverages must cool down to the room temperature before putting them in the freezer.
- The foodstuff that you want to freeze must be fresh and in good quality.
- Divide the food into portions according to your family's daily or meal based consumption needs.
- Pack the food in an airtight manner to prevent them from drying even if they are going to be stored for a short time.
- Materials to be used for pack tear-proof and resistant to co oils and acids and they must Moreover, they must be made materials that are suitable for
- Frozen food must be used im they are thawed and they sho frozen.
- Do not freeze too large quant time. The quality of the food i when it is frozen right throug quickly as possible.
- Placing warm food into the fr causes the cooling system to continuously until the food is

Freezer Compartment Setting	Fridge Compartment Setting	Remarks
-18°C	4°C	This is the normal recommended setti
-20, -24 or -24°C	4°C	These settings are recommended whe temperature exceeds 30°C.
Quick Freeze	4°C	Use when you wish to freeze your food time. Your refrigerator will return to mode when the process is over.
-18°C or colder	2°C	Use these settings if you think that yo compartment is not cold enough bec hot ambient conditions or frequent closing of the door.
-18°C or colder	Quick Fridge	Use this function when you place a lar into the fridge compartment or whe cool your food quickly. It is recomme activate Quick Fridge function 4-8 h placing a lot of food at once.

5.4. Recommendations for preserving the frozen food

- Frozen food that you have purchased should be stored in accordance with the frozen food manufacturer's instructions for a ******** (4 star) frozen food storage compartment.
- Note the following to ensure that the high quality achieved by the frozen food manufacturer and the food retailer is maintained:

1. Put packets in the freezer as quickly as possible after purchase.
2. Make sure that contents of the package are labelled and dated.
3. Check whether the "Use By" and "Best Before" dates on the packaging are exceed or not.

5.5. Placing the food

Freezer compartment shelves	Various frozen food such as meat, fish, ice cream, vegetables and etc.
Egg section	Eggs
Refrigerator compartment shelves	Food in pans, covered plates and closed containers
Door shelves of fridge compartment	Small and packaged food or beverage (such as milk, fruit juice, beer and etc.)
Crisper	Vegetables and fruits
Chiller compartment	Delicatessen products (cheese, butter, salami and wrapped fresh meat and fish.)

5.6. Deep-freeze information

Food must be frozen as rapidly as possible when they are put in a refrigerator in order to keep them in good quality.
It is possible to preserve the food for a long time only at -18°C or lower temperatures.
You can keep the freshness of food for many months (at -18°C or lower temperatures in the deep freeze).

Divide the food into portions according to your family's daily or meal based consumption needs.

Pack the food in an ai
prevent them from dry
going to be stored for

- Materials necessary for packa
- Cold resistant adhesive tape
- Self-adhesive label
- Rubber bands
- Pen

Materials to be used for packag
must be tear-proof and resist
humidity, odour, oils and acid
Foods to be frozen should not b
in contact with the previously
prevent them from getting tha

Frozen food must be u
after they are thawed
never be re-frozen.

5.7. Chiller compartment

***optional**

The chiller compartment maintains a lower temperature then the rest of the fridge, ideal for storing fresh meat fish and deli items.

You can increase the inner volume of your refrigerator by removing any of the chiller compartments:

1. Pull the compartment towards yourself until it stops.
2. Lift the compartment about 1 cm up and pull towards yourself to remove it from its seating.

5.8. Butter & cheese section

***optional**

Store food such as butter, cheese and margarine in this section.

5.9. Egg section

You can install the egg holder to the desired door or body shelf.

Never keep the egg holder in the freezer compartment.

5.10.Crisper

Crisper of the refrigerator is designed specially to keep the vegetables fresh without losing their humidity. For this purpose, cool air circulation is intensified around the crisper in general. Remove the door shelves that stand against the crisper before removing the crispers.

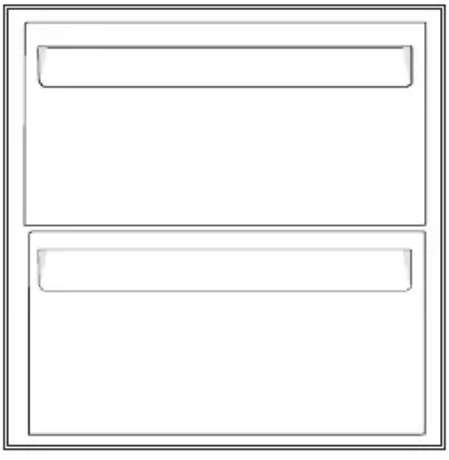

5.11.Odour filter

***optional**

Odour filter prevents unpleasa your refrigerator.

Odour filter can be locat compartment on the back wall which the odour filter is installe the front section and remove a the filter under sunlight for on cleaned during this time. Insta its place.

Odour filter must be cleaned c

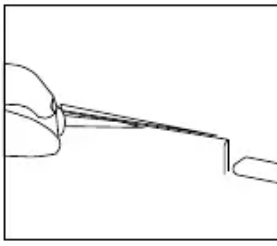

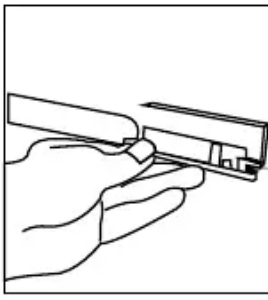

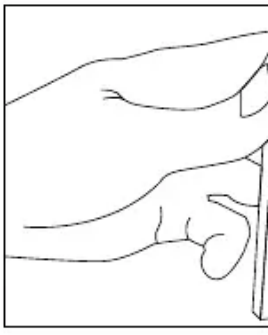

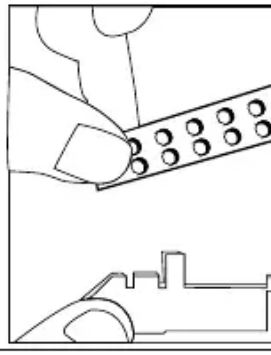

5.12.Using the dispenser

***optional**

The water and ice dispenser will provide chilled water and ice either direct from your water supply or the water container in the fridge.

	It is normal for the first few glasses of water taken from the dispenser to be warm if not used for a long time.
	If the water dispenser is not used for a long period of time, dispose of first few glasses of water to obtain cool fresh water.

During initial use, you will have to wait approximately 12 hours for the water to cool down.

To take water/ice from the dispenser, first select the option required then obtain by pushing the lever.Take out the glass a little while after you by pushing the lever.

Push the lever of the water dispenser with your glass. The dispenser will cease operating once you release the lever.

When operating the water dispenser, maximum flow can be obtained by pressing the lever fully.

Please remember that the amount of flow from the dispenser is subject to the degree you press the lever.

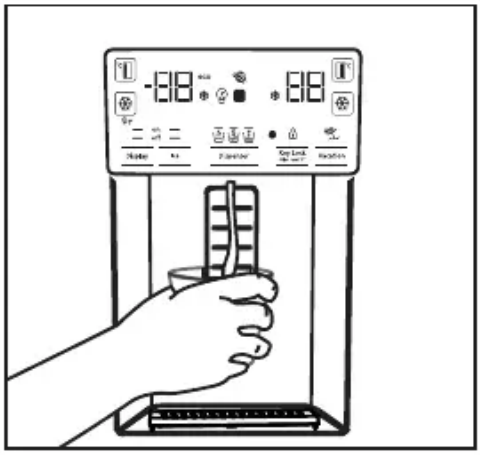

As the level of the water in your
rises, slightly lessen the pressur
prevent the overspill. If you slig
the water will drip; this is quite n
failure.

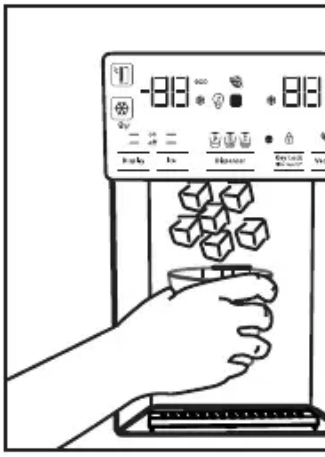

5.13.Minibar

(Optional)

The refrigerator's minibar door
accessed without opening the
allow you to easily take frequen
food and beverages from the re
the minibar cover, push with yo
towards yourself.

	WARNING: Do not s heavy objects on the may damage the pro be injured.

To close this compartment, sim
from the upper section of the c

5.14.Drip tray

***optional**

Water that dripped while using the water dispenser accumulates in the spillage tray. You can remove the tray by pulling it to yourself or pressing on its edge (depending on the model). Remove the water with a sponge or a soft cloth.

- Use clean and pure potable water only.
- Capacity of the water tank is 3 liters; do not overfill.
- Push the arm of the water dispenser with a rigid glass. If you are using disposable plastic glasses, push the arm with your fingers from behind the glass.

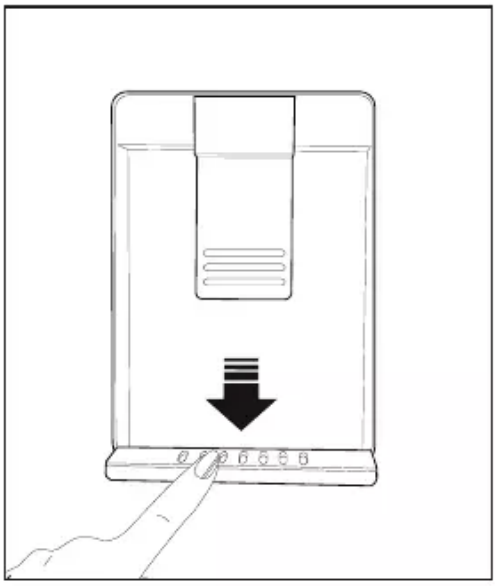

5.15.Ice-maker

(Optional)

Ice maker is located on the upp
freezer cover.
Hold the handles on the sides o
reservoir and move up to remov
Remove the ice-maker decorati
up.

OPERATION

To remove the ice reservoir

Hold the ice stock reservoir from t
move up and pull the ice stock res

To reinstall the ice reservoir

Hold the ice stock reservoir from t
with an angle to fit the sides of the
slot and make sure that the ice se
properly. (Figure 2)
Push downwards firmly, until there
between the reservoir and the doo



If you have difficulty in refitting the
rotary gear 90° and reinstall it as
Any sound you hear when the ice
reservoir is a part of normal opera



Figure 3

When the ice dispenser does not work properly

If you do not remove ice cubes for a long time, they will cause formation of ice chunks. In this case, please remove the ice stock reservoir in accordance with the instructions given above, seperate the ice chunks, discard the inseparable ice and put the ice cubes back into the ice stock reservoir. (Figure 4)

When ice does not come out, check for any ice stuck in the canal and remove it. Regularly check the ice canal to clear the obstacles as shown in the figure 5.

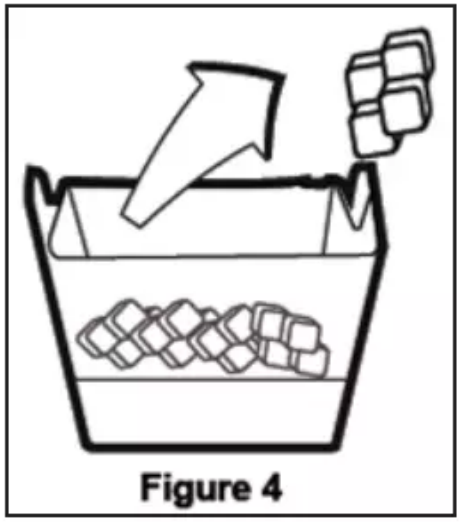

Figure 4

When using your refrigerator for the first time or when not using it for an extended period of time Ice cubes may be small due to air in the pipe after connection, any air will be purged during normal use.

Discard the ice produced for approximately one day since the water pipe may contain the contaminants.

Caution!

Do not insert the hand or any other object into the ice canal and blade since it may damage the parts or hurt the hand.

Do not let the children hang on the ice dispenser or the ice maker since it may cause an injury

To prevent dropping the ice stock reservoir use both hands when removing it.

If you close the door hard, it may cause water spilling over the ice stock reservoir.

Do not dismount the ice stock rese
necessary.



Figure 5

If you close the door hard, it may ca
over the ice stock reservoir.

Do not dismount the ice stock rese
necessary.

5.16 Humidity controlled crisper

(FreSHelf)

(This feature is optional)

Humidity rates of the vegetables and fruit are kept under control with the feature of humidity-controlled crisper and the food is ensured to stay fresh for longer.

We recommend you to place the leafy vegetables such as lettuce, spinach and the vegetables which are sensitive to humidity loss, in a horizontal manner as much as possible inside the crisper, not on their roots in a vertical position.

While the vegetables are being placed, specific gravity of the vegetables should be taken into consideration. Heavy and hard vegetables should be put at the bottom of the crisper and the lightweight and soft vegetables should be placed over.

Never leave the vegetables inside the crisper in their bags. If the vegetables are left inside their bags, this will cause them to decompose in a short period of time. In case contacting with other vegetables is not preferred for hygiene concerns, use a perforated paper and other similar packaging materials instead of a bag.

Do not place together the pear, apricot, peach, etc. and apple in particular which have a high level of generation of ethylene gas in the same crisper with the other vegetables and fruit. The ethylene gas which is emitted by these fruit may cause the other fruit to ripen faster and decompose in a shorter time.

6 Maintenance and cleaning

Cleaning your fridge at regular intervals will extend the service life of the product.



WARNING: Unplug the product before cleaning it.

- Never use gasoline, benzene or similar substances for cleaning purposes.
- Never use any sharp and abrasive tools, soap, household cleaners, detergent and wax polish for cleaning.
- Dissolve one teaspoon of bi-carbonate in half litre of water. Soak a cloth with the solution and wrung it thoroughly. Wipe the interior of the refrigerator with this cloth and the dry thoroughly.
- Make sure that no water enters the lamp housing and other electrical items.
- If you will not use the refrigerator for a long period of time, unplug it, remove all food inside, clean it and leave the door ajar.
- Check regularly that the door gaskets are clean. If not, clean them.
- To remove door and body shelves, remove all of its contents.
  Remove the door shelves by pulling them up. After cleaning, slide them from top to bottom to install.
- Never use cleaning agents or water that contain chlorine to clean the outer surfaces and chromium coated parts of the product. Chlorine causes corrosion on such metal surfaces.

6.1 Avoiding bad odours

Materials that may cause odour are not used in the production of our refrigerators. However, due to inappropriate food preserving conditions and not cleaning the inner surface of the refrigerator as required can bring forth the problem of odour. Pay attention to following to avoid this problem:

- Keeping the refrigerator clean is important. Food residuals, stains, etc. can cause odour.
  Therefore, clean the refrigerat
  carbonate dissolved in water e
  Never use detergents or soap.
- Keep the food in closed contai
  Microorganisms spreading out
  containers can cause unpleas
- Never keep the food that have
  before dates and spoiled in the

6.2 Protecting the plastic surfaces

Do not put liquid oils or oil-cooke
refrigerator in unsealed containe
the plastic surfaces of the refrige
spilled or smeared onto the plas
and rinse the relevant part of the
with warm water.

7 Troubleshooting

Check this list before contacting the service. Doing so will save you time and mone
frequent complaints that are not related to faulty workmanship or materials. Certain
herein may not apply to your product.

The refrigerator is not working.

- The power plug is not fully settled. >>> Plug it in to settle completely into the soc
- The fuse connected to the socket powering the product or the main fuse is blown
  fuses.

Condensation on the side wall of the cooler compartment (MULTI ZONE, COOL, CONTROL a

- The environment is too cold. >>> Do not install the product in environments with
  below -5°C.
- The door is opened too frequently >>> Take care not to open the product's door
- The environment is too humid. >>> Do not install the product in humid environm
- Foods containing liquids are kept in unsealed holders. >>> Keep the foods conta
  sealed holders.
- The product's door is left open. >>> Do not keep the product's door open for lon
- The thermostat is set to too low temperature. >>> Set the thermostat to appropr

Compressor is not working.

- In case of sudden power failure or pulling the power plug off and putting back on,
  in the product's cooling system is not balanced, which triggers the compressor th
  The product will restart after approximately 6 minutes. If the product does not res
  period, contact the service.
- Defrosting is active. >>> This is normal for a fully-automatic defrosting product.
  carried out periodically.
- The product is not plugged in. >>> Make sure the power cord is plugged in.
- The temperature setting is incorrect. >>> Select the appropriate temperature set
- The power is out. >>> The product will continue to operate normally once the po

The refrigerator's operating noise is increasing while in use.

- The product's operating performance may vary depending on the ambient temper
  This is normal and not a malfunction.

The refrigerator runs too often or for too long.

- The new product may be larger than the previous one. Larger products will run fo
- The room temperature may be high. >>> The product will normally run for long p
  room temperature.
- The product may have been recently plugged in or a new food item is placed insid
  product will take longer to reach the set temperature when recently plugged in or
  is placed inside. This is normal.
- Large quantities of hot food may have been recently placed into the product. >>>
  food into the product.
- The doors were opened frequently or kept open for long periods. >>> The warm
  will cause the product to run longer. Do not open the doors too frequently.
- The freezer or cooler door may be ajar. >>> Check that the doors are fully closed
- The product may be set to temperature too low. >>> Set the temperature to a hig
  wait for the product to reach the adjusted temperature.
- The cooler or freezer door washer may be dirty, worn out, broken or not properly s
  Clean or replace the washer. Damaged / torn door washer will cause the product
  periods to preserve the current temperature.

Troubleshooting

The freezer temperature is very low, but the cooler temperature is adequate.

- The freezer compartment temperature is set to a very low degree. >>> Set the fre compartment temperature to a higher degree and check again.

The cooler temperature is very low, but the freezer temperature is adequate.

- The cooler compartment temperature is set to a very low degree. >>> Set the fre compartment temperature to a higher degree and check again.

The food items kept in cooler compartment drawers are frozen.

- The cooler compartment temperature is set to a very low degree. >>> Set the fre compartment temperature to a higher degree and check again.

The temperature in the cooler or the freezer is too high.

- The cooler compartment temperature is set to a very high degree. >>> Temperatu cooler compartment has an effect on the temperature in the freezer compartment temperature of relevant parts reach the sufficient level by changing the temperatu freezer compartments.
- The doors were opened frequently or kept open for long periods. >>> Do not ope frequently.
- The door may be ajar. >>> Fully close the door.
- The product may have been recently plugged in or a new food item is placed insid normal. The product will take longer to reach the set temperature when recently p new food item is placed inside.
- Large quantities of hot food may have been recently placed into the product. >>> food into the product.

Shaking or noise.

- The ground is not level or durable. >>> If the product is shaking when moved slo the stands to balance the product. Also make sure the ground is sufficiently durab product.
- Any items placed on the product may cause noise. >>> Remove any items placed

The product is making noise of liquid flowing, spraying etc.

- The product's operating principles involve liquid and gas flows. >>> This is norma malfunction.

There is sound of wind blowing coming from the product.

- The product uses a fan for the cooling process. This is normal and not a malfuncti

There is condensation on the product's internal walls.

- Hot or humid weather will increase icing and condensation. This is normal and not
- The doors were opened frequently or kept open for long periods. >>> Do not ope frequently; if open, close the door.
- The door may be ajar. >>> Fully close the door.

There is condensation on the product's exterior or between the doors.

- The ambient weather may be humid, this is quite normal in humid weather. >>> T will dissipate when the humidity is reduced.

The interior smells bad.

Troubleshooting

- The product is not cleaned regularly. >>> Clean the interior regularly warm water and carbonated water.
- Certain holders and packaging materials may cause odour. >>> Use packaging materials without free of odour.
- The foods were placed in unsealed holders. >>> Keep the foods in s Micro-organisms may spread out of unsealed food items and cause Remove any expired or spoilt foods from the product.

The door is not closing.

- Food packages may be blocking the door. >>> Relocate any items blocking the d
- The product is not standing in full upright position on the ground. >>> Adjust the the product.
- The ground is not level or durable. >>> Make sure the ground is level and suffici bear the product.

The vegetable bin is jammed.

- The food items may be in contact with the upper section of the drawer. >>> Reor items in the drawer.



WARNING: If the problem persists after following the instructions in th your vendor or an Authorised Service. Do not try to repair the product.