INDUCTION HARDWARE

USE & INSTALLATION MANUAL
V2 · AUGUST 2026

VENTILATION · PRO DC RANGE HOODS

PROFESSIONAL WALL RANGE HOODS

Wall-mount chimney hoods — every one DC-motor driven

S-RH30 · S-RH36 · S-RH48 · S-RH60 · STAINLESS & BLACK STAINLESS



SHOWROOM

INDUCTIONHARDWARE.COM
12920 OLD VIRGINIA ROAD, SUITE 160
RENO, NEVADA 89521

SUPPORT

(775) 898-7562 · MON–FRI 9–4 PST
INFO@INDUCTIONHARDWARE.COM

RECORD HERE

MODEL & SERIAL

Four widths, one **standard**.

Induction Hardware aims to be the industry leader in electric and induction appliances. Every S-RH hood runs a brushless DC motor behind dishwasher-safe baffle filters, hangs on the same mounting plate, and telescopes to a 10ft ceiling. **Induction technology is the future of cooking.**



S-RH30
30″ · 1000 or 400 CFM



S-RH36
36″ · 1000 or 400 CFM



S-RH48
48″ · 1500 CFM



S-RH60
60″ · 1500 CFM

TABLE OF CONTENTS

Quick Start Guide	**3**
Rangehood Safety Instructions	**4–5**
Included Parts	**6**
Specifications — S-RH30 · 36 · 48 · 60	**7**
Installation, clearances & ducting	**8**
Installation Diagram	**9**
Venting Sheet — minimum duct clearance	**10**
Touch Screen Operation	**11**
Operation, care & service	**12**
Mounting Sheets — all four widths	**13–16**
For your records & contact	**17**

Induction is the new **electric.**

Induction cooking uses electromagnetic fields to directly heat pots and pans, making it faster, more energy-efficient, and more precise than traditional electric ceramic cooktops, which heat by transferring heat from a coil through the glass surface. Unlike ceramic cooktops, induction surfaces stay cooler to the touch and allow for instant temperature control.

FIRST FIVE STEPS

1. Confirm the hood is at least as wide as the appliance below it, and that the wall behind the mounting points has studs or blocking rated well above the hood's weight.
2. Confirm a minimum of 26 in. between the supporting surface for cooking vessels on the hob and the lowest part of the range hood — 30 to 36 in. is recommended.
3. Mark a vertical center line and the four mounting points, then pre-install screws in the two interior points.
4. With two people, hang the hood on the two set screws, level it, then secure all four mounting points.
5. Mount the upper chimney bracket at the ceiling, telescope the chimney up to it, and plug into a 120V three-pronged outlet inside the chimney.



Up to 10′	DC	Touch
CEILING HEIGHT WITH TELESCOPING CHIMNEYS	BRUSHLESS MOTOR(S)	SCREEN CONTROL

Read and obey all **safety messages.**

This is the safety alert symbol. This symbol alerts you to potential hazards that can kill or hurt you and others. All safety messages follow the safety alert symbol and one of the following words. Always read and obey all safety messages.

DANGER!

You **can be killed or seriously injured** if you do not immediately follow instructions.

WARNING!

You **can be killed or seriously injured** if you don't follow instructions.

CAUTION!

Hazards or unsafe practices **could result in minor personal injury** if you don't follow instructions.

HOUSEHOLD USE ONLY

To reduce the risk of fire, electrical shock, injury to persons, or damage when using the rangehood, follow basic precautions, including the safety warnings in this section. **This product is intended for household use only.**

Note that when the rangehood is operating simultaneously with an open fireplace or burner that depends on the air in the environment, the rangehood may remove the air from the environment which a burner or fireplace needs for combustion. The negative pressure in the environment must not exceed 4Pa (4×10^{-5} bar). Provide adequate ventilation in the environment for safe operation of the rangehood — operate the hood at one of the lowest functions if all windows are closed, or open a nearby window for added airflow into the home. Follow the local laws applicable for external air evacuation.

BEFORE CONNECTING THE MODEL TO ELECTRICITY

Please note that our rangehoods are produced with ready-to-use three-pronged plugs for use in standard residential 120V power supplies. If in doubt, please ask a qualified electrician for help.

WARNING! In certain circumstances electrical appliances may be a danger hazard.

Basic **precautions**, A through O.

A. Do not check the status of the filters while the rangehood is operating.

B. Do not touch bulbs or adjacent areas after prolonged use of the lighting, as they can eventually get quite hot.

C. Flambé cooking is prohibited underneath the rangehood.

D. Avoid free flames near the range hood, as it is damaging to the filters and the motor, and can cause a fire hazard.

E. Constantly check food frying; overheated oil may become a fire hazard.

F. Disconnect the electrical plug prior to any maintenance.

G. There shall be adequate ventilation in the room when the range hood is operating.

H. There is a risk of fire if cleaning is not carried out in accordance with the instructions.

I. If the supply cord is damaged, it must be replaced by the manufacturer, a service agent, or similarly qualified person(s) in order to avoid a hazard.

J. This appliance is not intended for use by persons (including children) with reduced physical, sensory or mental capabilities, or lack of experience and knowledge, unless they have been given supervision or instruction concerning use of the appliance by a person responsible for their safety.

K. Children should be supervised to ensure that they do not play with the appliance.

L. The air must not be discharged into a flue that is used for exhausting fumes from appliances burning gas or other fuels.

M. The minimum distance between the supporting surface for the cooking vessels on the hob and the lowest part of the range hood shall be at least 26 in.

N. Regulation concerning the discharge of air has to be fulfilled.

O. The hoods can be applicable for 6 gas burners cooking together max (if using with an induction range, disregard this note).

INSTALLATION INSTRUCTIONS

Assembly and electrical connections must be carried out by specialized personnel. The appliance has been manufactured as class I, therefore an earth cable is necessary (an earth cable is a protective conductor that aids in preventing fire and electric shocks).

WARNING — State of California Proposition 65: This product contains bisphenol A (BPA), which is known to the State of California to cause birth defects or other reproductive harm, and lead and lead compounds, which are known to the State of California to cause cancer and birth defects or other reproductive harm. For more information, go to www.P65Warnings.ca.gov.

Everything in the **carton.**

Our range hoods come with dishwasher-safe baffle filters and grease traps, held in place with a combination of magnetic strips and gentle springs to ensure a tight fit and minimal vibration when the hood is in full operation. Every hood also ships with a backdraft damper and 10″ flexible ducting.

For full airflow, 10″ ducting is recommended. An 8″ or 6″ duct run is still no problem for the 30" or 36" hood, as long as the unit is governed to a maximum of 400 CFM — the touch screen prompts for this the first time the hood is powered up. The 48" and 60" hood require 10" ducting.

Two telescoping chimneys are included, covering ceiling heights up to 10′. Every model comes ready to plug into a standard residential 120V three-pronged outlet.

HOOD WEIGHTS — SIZE THE HARDWARE ABOVE THESE

S-RH30 · 30″	**65 lb**
S-RH36 · 36″	**68 lb**
S-RH48 · 48″	**95 lb**
S-RH60 · 60″	**110 lb**

Item	Qty
Hood body with baffle filters and grease traps fitted	**1**
Telescoping chimney sections	**2**
Hood mounting plate	**1 set**
Upper chimney mounting bracket	**1**
Backdraft damper	**1**
Flexible ducting, 10″ round	**1**

MOUNTING NOTE

Wall type and stud location play a crucial role in determining the appropriate mounting method and hardware, and we advise consulting a contractor or other professional to ensure the hood is safely and securely mounted. Failing to mount the hood correctly could damage the hood, wall, countertop or appliances beneath, and could cause significant injury. Screws, toggle bolts, wall anchors or other hardware must be rated in excess of the hood's weight and appropriate for the type of material they are mounted to. Follow local building codes, level the hood before finalizing any hardware, and verify ventilation clearances.



Four widths. One **DC motor**.

INDUCTION HARDWARE

S-RH SERIES — BY WIDTH AND AIRFLOW

Model	Airflow	Finishes	Weight
S-RH30 · 30″	**1000 or 400 CFM**	SS · BS	65 lb
S-RH36 · 36″	**1000 or 400 CFM**	SS · BS	68 lb
S-RH48 · 48″	**1500 CFM**	SS · BS	95 lb
S-RH60 · 60″	**1500 CFM**	SS · BS	110 lb

EVERY S-RH HOOD INCLUDES

Motor(s)	**Brushless DC**
Filtration	**Dishwasher-safe baffles**
Chimneys	**Two, telescoping to 10 ft**
Lighting	**LED work lights**
Finishes	**Stainless · Black Stainless**

> **Specify the hood at least as wide as the appliance below it.** The 30″ and 36″ models are switchable between 400 and 1000 maximum CFM at first power-up; the 48″ and 60″ are fixed maximum at rated output.

OTHER MOUNTS

This manual covers the S-RH wall-mount series only. Insert and under-cabinet hoods ship with their own manuals — see the Insert Range Hood care & install guide and the Under Cabinet Professional Range Hood manual for cutout, bracket and duct dimensions specific to those mounts.



THE SERIES

One motor platform, four widths.

The wall-mount hood is the finished statement piece: a pyramid canopy, a telescoping chimney to the ceiling, and the same brushless DC blower across every width.

Hang it, then **duct it.**

CLEARANCE SCHEDULE

Cooking surface to underside	**30–36″ [76–91 cm]**
Absolute minimum, hob to hood	**26″ [66 cm]**
Max ceiling, supplied chimneys	**10 ft**
Hood width vs appliance	**Equal or wider**

PUBLISHED DIMENSIONS — EVERY WIDTH

Canopy depth	**24″**
Canopy height	**18″**
To top of lower chimney	**36½″**
Maximum height, chimney extended	**55⅛″**
Chimney footprint — 30″ and 36″	**15½ × 12½″**
Chimney footprint — 48″ and 60″	**18 × 12½″**

NEED A LONGER CHIMNEY?

Induction hardware offers chimney extensions for the 30/36" and 48/60" hoods for mounting with ceilings between 9.5-12.5 feet hight.

INSTALLATION NOTES

A Fix into structure, not into drywall alone. A 68 lb 48″ hood needs blocking or studs behind the mounting plate.

B Run the duct as straight and as short as the layout allows. Every elbow costs airflow no setting recovers. We recommend **at least 16 inches** of vertical vent before the first bend.

C Supplied chimneys cover ceilings to 10 ft. A taller room needs an extension ordered before the hood is hung.

D Specify a hood at least as wide as the appliance below it, hung 30″ to 36″ above the cooking surface.

E Size make-up air to the airflow of the model actually specified — a 1500 CFM 48″ and a 400 CFM 30″ are not the same.

F Terminate the duct outdoors with a proper cap. Never vent into an attic, soffit or crawl space.

SHIPS IN THE BOX

- Hood body, baffle filters, and grease trays
- Two telescoping chimney sections
- Mounting plate and fixings
- Duct collar, flexible duct, and damper



POWER CONNECTION

The hood ships with a power cord and NEMA 5-15P plug already installed. Provide a standard 120 V grounded outlet within the dimensions of the chimney.

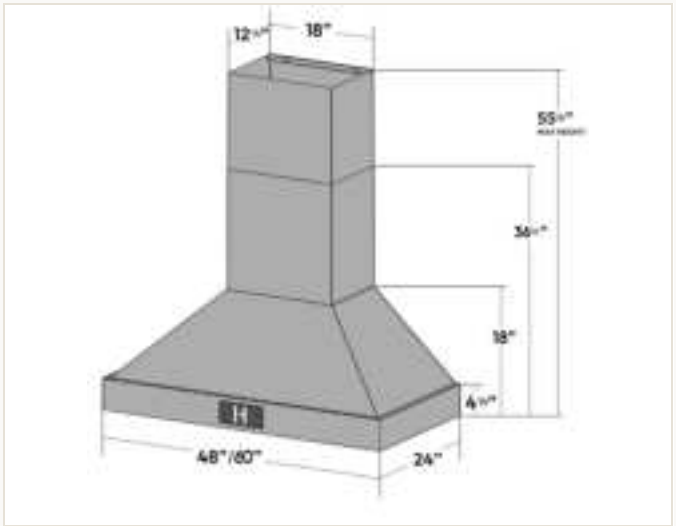

Elevation shown for the 48″ and 60″. Per-model mounting sheets follow on pages 12–15.

Center line, four points, **two people**.

1. When fixing to the wall, ensure that there are no electric wires, gas or water pipes in the area where holes are to be made.
2. Mark a vertical center line on the wall from the ceiling to just below where the mounting points will be, then mark the four mounting point positions. Follow local guidelines for the building materials being fixed into, and **always use all four mounting points**.
3. Pre-install screws into the wall at the two interior mounting points, in accordance with local code and the specific install scenario.
4. With two people, hang the range hood onto the two set screws. Once in place, gently tighten the two center screws, then secure the outer mounting points for further security.
5. Arrange the electrical supply within the dimensions of the chimney and plug the hood into an outlet placed inside the chimney, or where applicable.

MOUNTING THE CHIMNEY

6. Mount the upper chimney bracket to the wall, close or flush to the ceiling, Select appropriate wall anchors and screws based appropriate for wall material with weight rating exceeding the unit weight
7. Place both chimney pieces onto the hood and telescope the inner piece up to the ceiling and the upper bracket. Two mounting holes on either side of the upper chimney fix it to the bracket.

BEFORE DRILLING

Every home and every install is unique. The installer must ensure screws and anchors suit the wall type, that hardware is rated above the hood's weight, and that the hood is level before hardware is finalized.

WALL LAYOUT

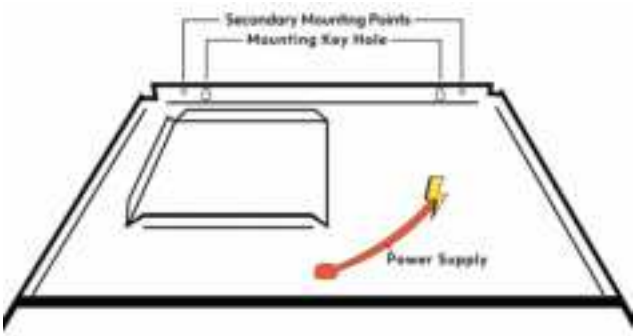

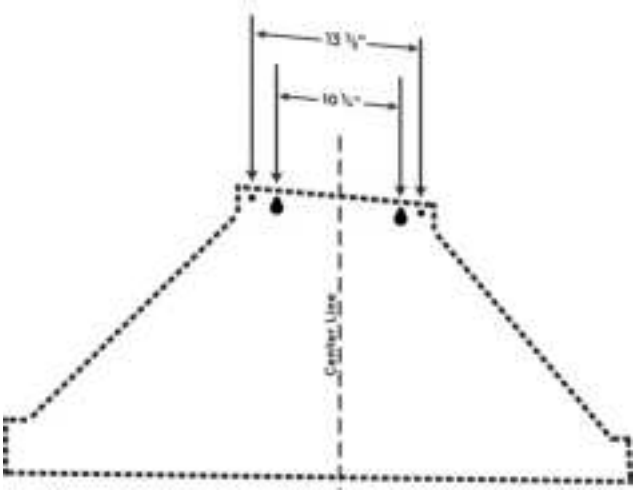

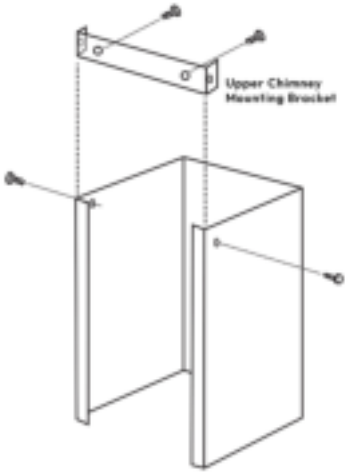

INSTALLATION DRAWING · VENTING SHEET

Professional Range Hood — S-RH Series

Minimum vent clearance · straight duct before first bend

INCHES [MM]

1 · FRONT ELEVATION — DUCT RUN

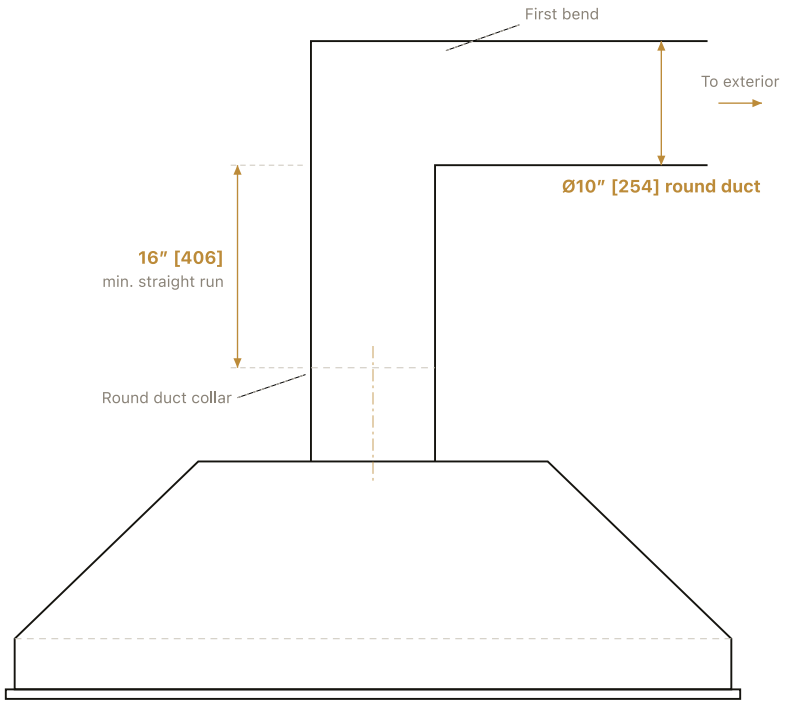

Maintain the full straight duct length between the hood outlet and the first elbow to preserve airflow.

Verify the duct route, wall or roof cap, and make-up air requirements on site before installation.

Everything from **one screen.**



SPEED · 0–4 AND BOOST

Tap **Speed**, then select a number on the slider. 0 is off, 1 is the lowest, and **B** is a boost that pushes maximum airflow — ideal for heavy grease or a smoking pan. Boost is temporary and reverts to 4 when it completes.



LIGHTING · 0–5

Tap **Lighting** in the upper left. The scale runs 0 to 5, with 0 completely off and 5 the brightest setting. **Delay Power off** sits below it, running the blower on for a set period after cooking.



OTHER FUNCTIONS

Tap **Other Functions** in the upper right for **Holiday Mode** — every twelve hours the hood runs an air exchange at the lowest setting for fifteen minutes, so the home has fresh air on your return — and **Ventilation Mode**.



SETTINGS MENU

Touch the top center of the screen and drag down to bring the settings menu into view: **Home Page**, **Settings**, **Alarm Setting** and **Child Lock**. The clock and date display along the top of every screen.

CFM GOVERNOR — FIRST POWER-UP, S-RH30 AND S-RH36

On the S-RH30 and S-RH36 the screen opens with a warning the first time the hood is connected to power: the product vents in excess of 400 CFM, which may violate building and safety codes in some locations and may result in backdrafting, fires and other risks.

Answer **YES** if the installation requires a 400 CFM limit — if the home ducts out at 6″, or local codes cap airflow. Answer **NO** for full airflow: 1000 CFM on the 30″ and 36″. Because the blower is a DC motor, the limit is set in software and the power drawn is only what the running function needs. **The S-RH48 and S-RH60 cannot be governed** — they run at 1500 CFM and require the full 10″ duct.



Quiet power, **kept clean.**

USING THE HOOD

1. Start the hood before you start cooking. Capturing steam early beats chasing smoke later.
2. A DC motor draws materially less power than an AC equivalent at the same airflow, and runs quieter at the settings you actually use.
3. Run a low setting for ten minutes after cooking to clear residual steam from the room.
4. Induction produces steam rather than combustion gases, so a lower setting usually does the job than a gas kitchen needs.
5. Use the lights as task lighting over the hob, not as a substitute for kitchen lighting.

BEFORE FIRST USE

Remove all protective film from the canopy and chimney.

Confirm the grease trays and baffle filters are seated and latched.

Check the damper opens freely with the fan running.

Run every speed once and confirm the duct run is quiet at full power.



CARE

1. Wash the baffle filters monthly under normal use. They are the whole filtration system — a greased baffle costs airflow and becomes a fire risk.
2. Let filters dry fully before refitting. Water carried back into the canopy will streak the interior.
3. Stainless and Black Stainless take a mild detergent and a stainless polish worked with the grain — never an abrasive pad.
4. Wipe the control panel with a damp cloth. Never spray cleaner into a control or a light housing.
5. Clean gently around the model and serial plate — abrasives lift the legend.

IF SOMETHING IS WRONG

Poor capture	Wash the baffles, then check the duct run for a crushed section or a stuck damper.
Noisy at speed	Usually duct, not motor — too many elbows or an undersized run.
Backdraft	Ensure you follow local code and ensure that your house can provide make-up air sized to the model's airflow.

ACCESSORIES & PARTS

Baffle filters — included, available as service parts

Chimney extension — ceilings above 10 ft

Recirculating charcoal kit — see range hood accessories

Outdoor range hoods — separate line for the outdoor kitchen

LIFETIME INDUCTION-CLAD WARRANTY

Parts and repair support for as long as you own the hood. Register the model and serial number from the nameplate, then call (775) 898-7562 or email info@inductionhardware.com.

S-RH30 — 30″ Wall Mount

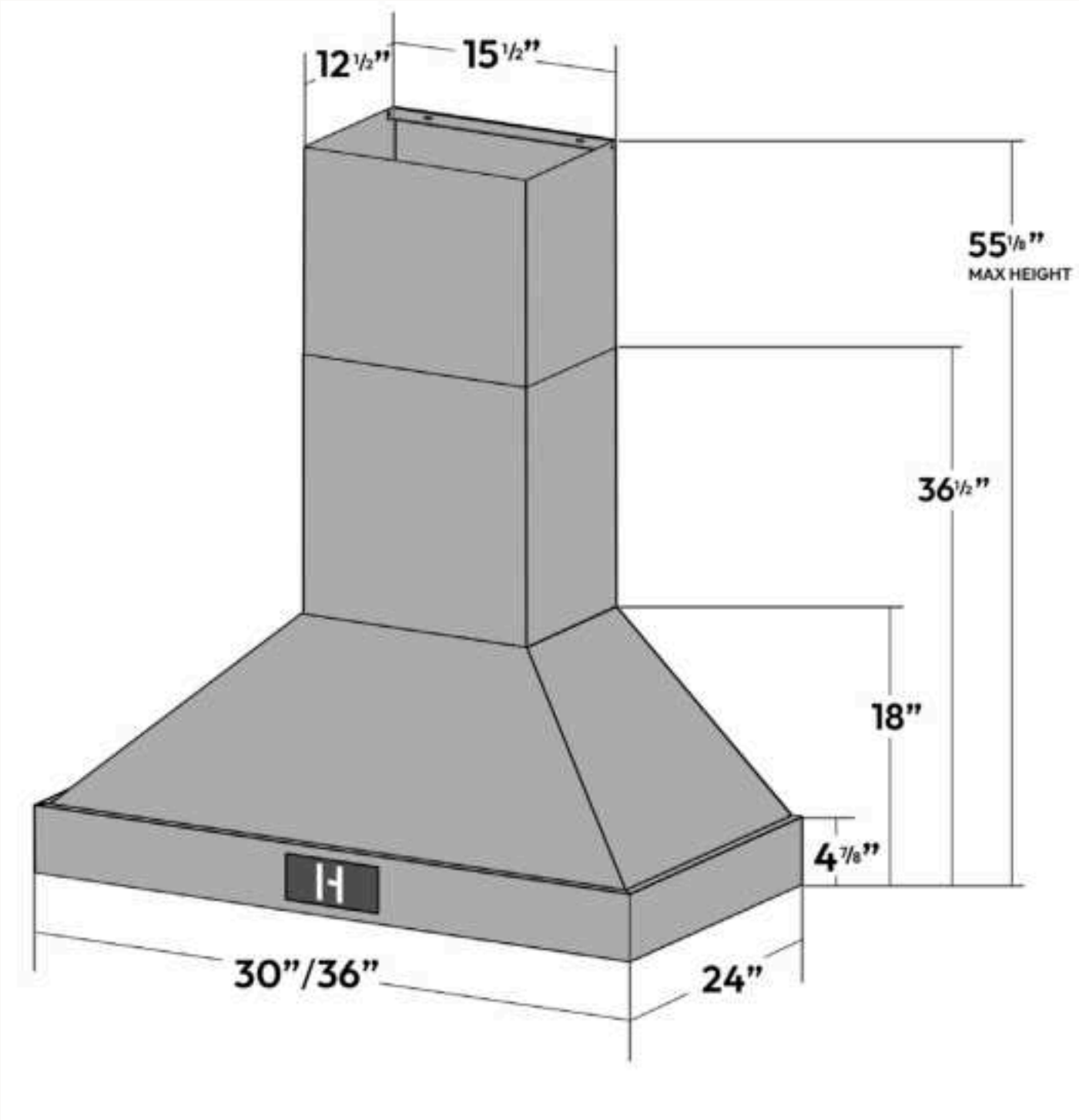

S-RH36 — 36″ Wall Mount

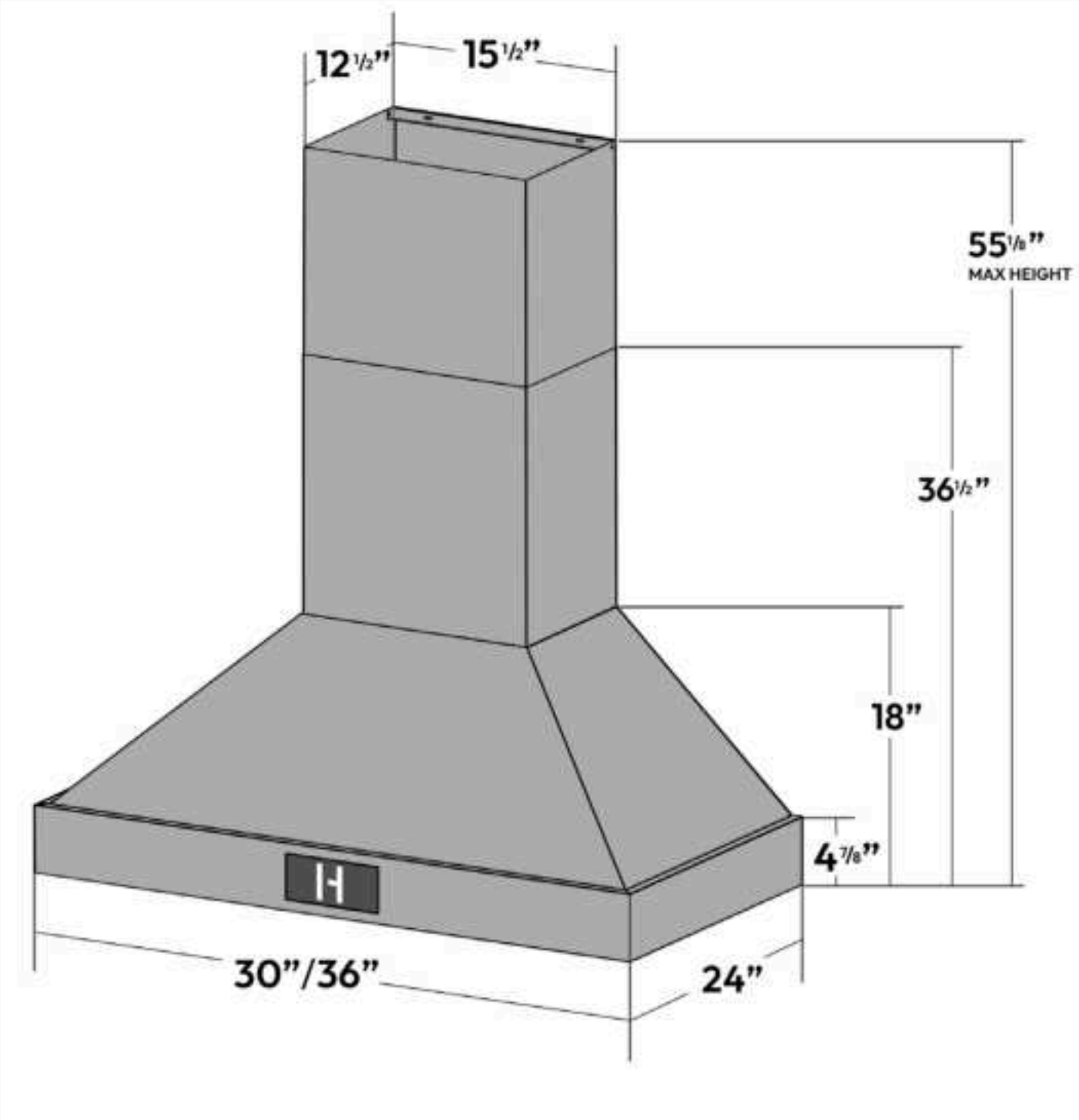

S-RH48 — 48″ Wall Mount

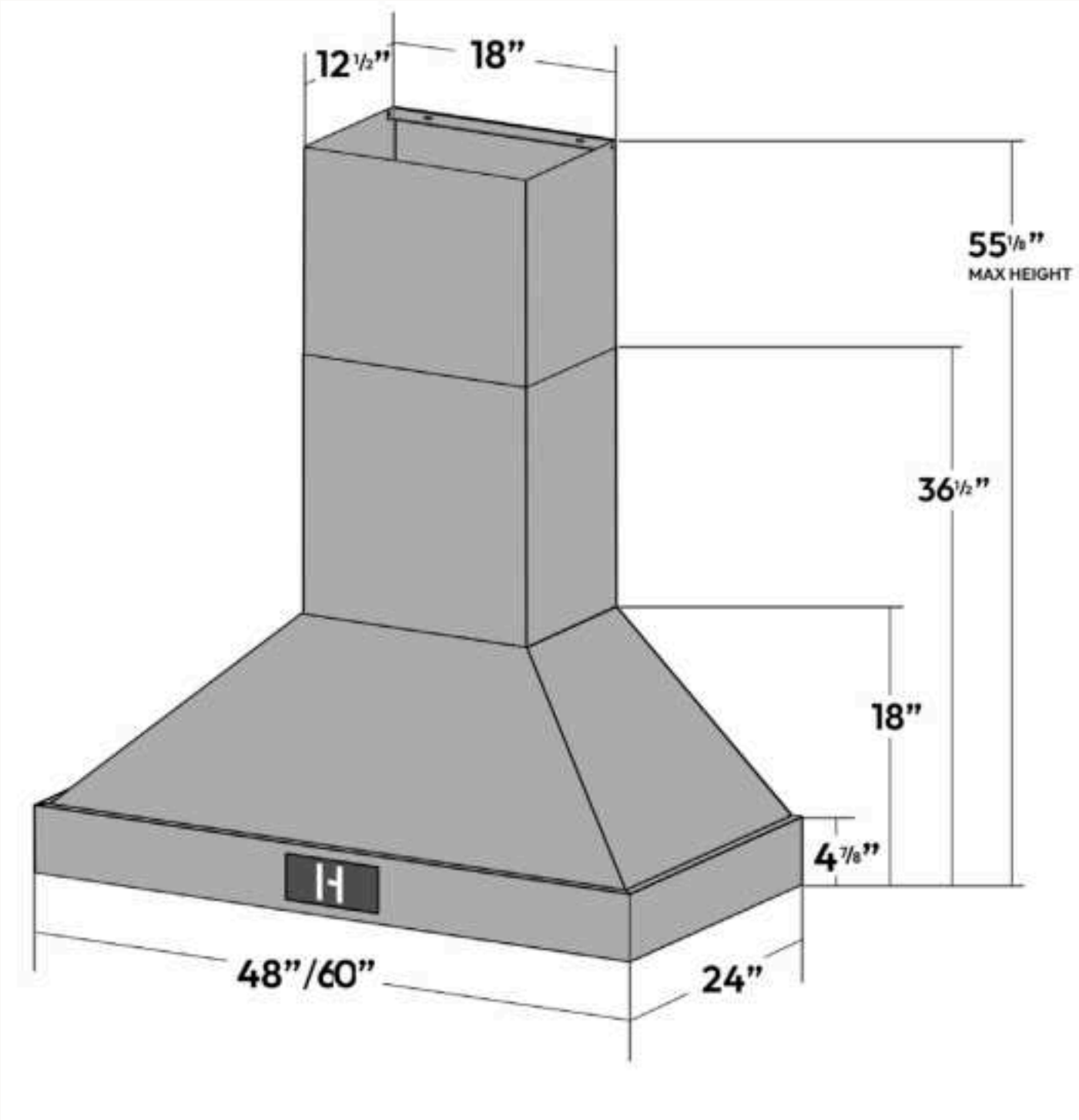

S-RH60 — 60″ Wall Mount

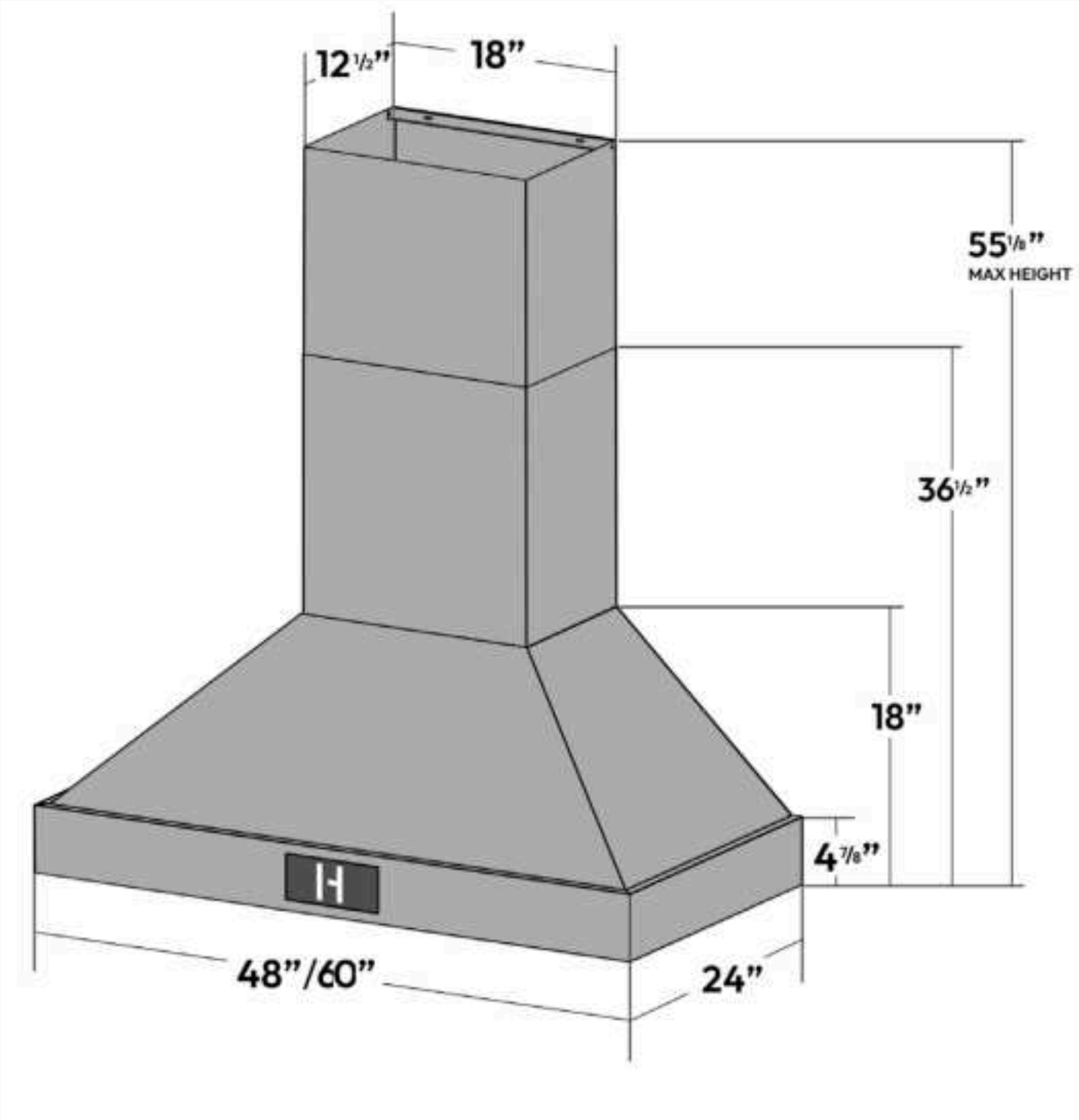

FOR YOUR RECORDS

Keep this manual with the **receipt**.

Thank you for purchasing your professional range hood. This manual contains important information regarding the proper installation, use, and maintenance of your range hood. Following this manual will ensure that your product will work at its peak performance and efficiency.

Please write down the model number and serial number below for future reference. Both numbers are located on the nameplate inside the canopy and are needed to obtain warranty service. You may also want to staple your receipt to this manual, as it is the proof of your purchase and may also be needed for service under warranty.

MODEL NUMBER

SERIAL NUMBER

DATE OF PURCHASE

INSTALLER / COMPANY

BEFORE CONTACTING CUSTOMER SERVICE

If you received a damaged product, immediately contact the retailer or dealer that sold you the product.

Read and follow this instruction manual carefully to help you install, use and maintain your unit.

Read the troubleshooting section of this manual — it will help you diagnose and solve common issues.

CONTACT US

Website	**www.inductionhardware.com**
Phone	**(775) 898-7562**
Email	**info@inductionhardware.com**
Address	**12920 Old Virginia Road, Suite 160 Reno, Nevada 89521, USA**

INDUCTION HARDWARE

Thank you for choosing Induction Hardware.
The Future of Cooking is Now.

Thank you for being part of the Induction Hardware community.
If you ever need support, our team is always here to help.

www.INDUCTIONHARDWARE.com