TRICITY BENDIX

OPERATING AND INSTALLATION INSTRUCTIONS



FRIDGE-FREEZER

TB 180 TF

2222 139-91

Download from Www.Somanuals.com. All Manuals Search And Download.

IMPORTANT SAFETY INFORMATION

It is most important that this instruction book should be retained with the appliance for future reference. Should the appliance be sold or transferred to another owner, or should you move house and leave the appliance, always ensure that the book is left with the appliance in order that the new owner can get to know the functioning of the appliance and the relevant safety information.

This information has been provided in the interest of safety. You MUST read it carefully before installing or using the appliance.

Installation

- This appliance is heavy. Care should be taken when moving it.
- It is dangerous to alter the specifications or attempt to modify this product in any way.
- Care must be taken to ensure that the appliance does not stand on the electrical supply cable. **Important:** if the supply cable is damaged, it must be replaced by a special cable available from your local Service Force Centre.
- Any electrical work required to install this appliance should be carried out by a qualified electrician or competent person.
- Parts which heat up should not be exposed. Whenever possible, the back of the appliance should be close to a wall but leaving the required distance for ventilation as stated in the installation instructions.
- The appliance should be left for 2 hours after installation before it is turned on, in order to allow the refrigerant to settle.

Child Safety

- Do not allow children to tamper with the controls or play with the product.
- Keep all packaging well away from children.

General Safety

- **This appliance contains hydrocarbons in its cooling unit; maintenance and recharging must therefore only be carried out by authorized technicians.**
- **Take utmost care when handling your appliance so as not to cause any damages to the cooling unit with consequent possible fluid leakages.**
- **The appliance must not be located close to cookers, radiators or boilers.**
- **Avoid prolonged exposure of the appliance to direct sunlight.**
- **Do not use other electrical appliances (such as ice cream makers) inside of refrigerating appliances.**

During Use

- This appliance is designed for domestic use only, specifically for the storage of edible foodstuffs.
- Frozen food must NOT be re-frozen once it has thawed out.
- Do not place carbonated or fizzy drinks in the freezer.
- Do not remove items from the freezer if your hands are damp/wet, as this could cause skin abrasions or frost/freezer burns.
- Ice lollies can cause ‘frost/freezer burns’ if consumed straight from the freezer.
- Manufacturers’ storage recommendations should be strictly adhered to. Refer to relevant instructions.
- The cooling plate or refrigerated freezer shelves in this appliance contain channels through which the refrigerant passes. If these are punctured this will cause substantial damage to the appliance and result in food loss. DO NOT USE SHARP INSTRUMENTS to scrape off frost or ice. Under NO circumstances should solid ice be forced off the lining or shelves. Solid ice should be allowed to thaw, when defrosting the appliance. See Defrost Instructions.

Maintenance and Cleaning

- Switch off and unplug the appliance before carrying out any cleaning or maintenance work.

Servicing

- This product should be serviced by an authorised engineer and only genuine spare parts should be used.
- Under no circumstances should you attempt to repair the machine yourself. Repairs carried out by inexperienced persons may cause injury or serious malfunctioning. Refer to your local Service Force Centre and always insist on genuine spare parts.

At the end of the Appliance Life

- When disposing of your appliance, use an authorised disposal site.
- Remove the plug and ensure that any locks or catches are removed, to prevent young children being trapped inside.

Download from Www.Somanuals.com. All Manuals Search And Download.

CONTENTS

Instructions for the User

Important Safety Information 2

Description of the Appliance 4

Operation 5

Before use 5

Setting the temperature 5

Freezing fresh food 5

Storage of frozen food 5

Thawing 6

Making ice cubes 6

Fresh food refrigeration 6

Movable shelves 7

Freezing calendar 7

Hints and Tips 8

Maintenance and Cleaning 9

Internal cleaning 9

External cleaning 9

When the appliance is not in use 9

Changing the light bulb 9

Defrosting 9

Something Not Working 11

Service and Spare Parts 12

Customer Care 12

Guarantee Conditions 13

Instructions for the Installer

Technical Specification 14

Installation 15

Positioning 15

Rear spacers 15

Electrical Connection 16

Door Reversability 17

Download from Www.Somanuals.com. All Manuals Search And Download.

DESCRIPTION OF THE APPLIANCE

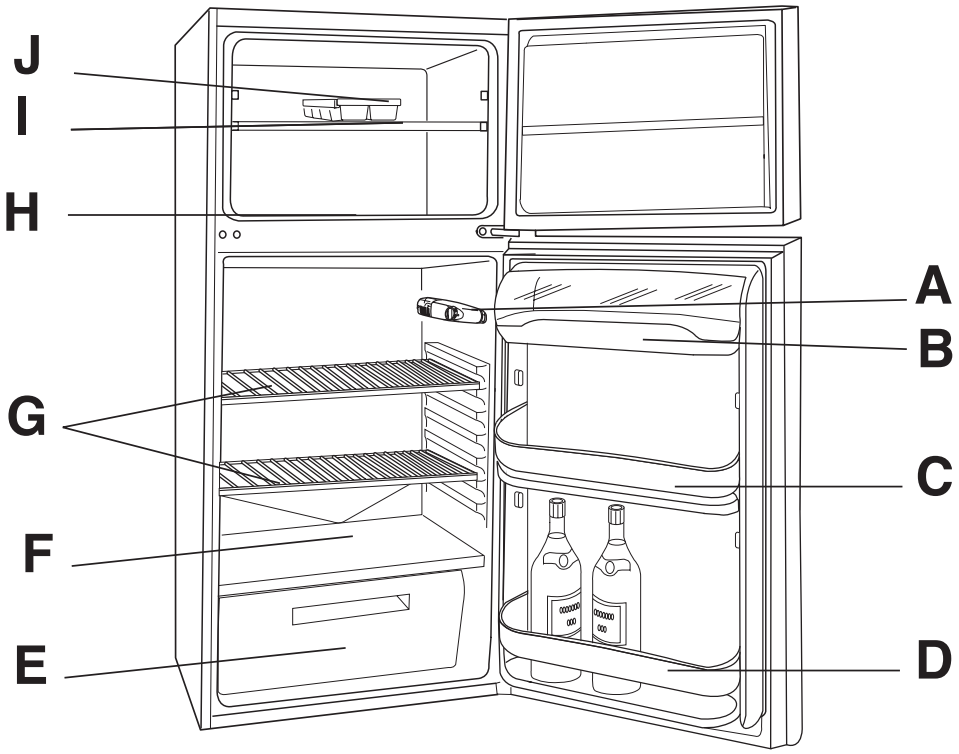

A - Thermostat control for fridge and freezer compartments
B - Dairy compartment
C - Storage shelf
D - Bottle storage shelf
E - Salad drawer
F - Glass shelf
G - Wire shelves
H - Frozen food storage
I - Shelf for freezing fresh foods
J - Ice tray

Download from Www.Somanuals.com. All Manuals Search And Download.

OPERATION

Before using

Remove all securing tapes. Wash inside the appliance with lukewarm water and bicarbonate of soda (5 ml to 0.5 litre of water).

Do not use soap or detergent as the smell may linger. Dry thoroughly.

Setting the temperature

The temperature inside the refrigerator is regulated by a thermostat with 6 temperature positions and one «OFF» (O) position.

Position 1 = minimum coldness

Position 6 = maximum coldness

Turn the thermostat dial to the required position.

The intermediate position is usually the most suitable (3-4).

The thermostat setting can vary as the temperature inside the refrigeration compartment depends on the following factors:

– room temperature

– how often the door is opened

– how much food is stored

– position of the appliance

Important

If the fridge is not defrosting correctly, it is possible that because a very low temperature has been selected, the motor is working continuously, which prevents the defrost cycle from operating.

To ensure correct defrosting, a lower number should be selected on the thermostat and you should notice that the motor cuts out from time to time, which is correct.

If you wish to return to a lower temperature, turn the thermostat to a higher number, however you should turn the setting lower occasionally to allow automatic defrosting.

The freezer compartment

The four-star freezer compartment is suitable for storage of commercially frozen food and for freezing fresh foods.

Freezing fresh food

To freeze fresh foods it is necessary to change the setting of the thermostat knob.

However, for a quicker freezing operation, turn the thermostat knob to the coldest setting; but remember that, in this condition the refrigerator compartment temperature might drop below 0° C.

If this occurs reset thermostat knob to a warmer setting.

In any 24 hours you can freeze up to 3 kg. of fresh food.

Place the food to be frozen on the shelf of the freezer as this is the coldest part.

Important

In the event of a power cut do not open the door. The food in the freezer will not be affected if the power cut is short and if the freezer is full. Should the food begin to thaw, it must be consumed quickly and must not be re-frozen.

Storage of frozen food

When first starting-up or after a period of non-use, before putting the products in the freezer compartment let the appliance run for at least two hours on the coldest setting, then turn the thermostat knob to the normal opertion position.

Do not exceed the storage period indicated by the manufacturer.

Finally, do not open the door frequently or leave it open longer than is absolutely necessary.

Important

Do not put carbonated liquids, (fizzy drinks etc.), in the freezer compartment.

Ice lollies, if consumed immediately after removal from the freezer, can cause low temperature skin burns.

Do not remove items from the freezer if your hands are damp/wet, as this could cause skin abrasions or “frost/freezer burns”.

Download from Www.Somanuals.com. All Manuals Search And Download.

Thawing

Frozen food, prior to being used, can be thawed in the fridge or at room temperature depending on the time available. Small food items may even be cooked from frozen; in this case cooking will take longer.

Any frozen food which is allowed to thaw accidentally should either be eaten as soon as possible or thrown away. Alternatively, if the food is uncooked and has not been completely defrosted it can be cooked and then refrozen.

Meat, fish and fruit should be thawed in the refrigerator compartment and small pieces of meat can even be cooked while still frozen, but you must ensure that it is thoroughly cooked through.

Vegetables should be directly immersed in boiling water; ready-cooked dishes can be placed directly in the oven in their aluminium wrapping.

A microwave oven is particularly suitable for thawing any type of frozen food: follow the oven instructions, particularly regarding the placement of aluminium wrapping or containers in the oven.

 **Defrosted cooked food must never be refrozen.**

Making ice cubes

The appliance is provided with one tray for the production of ice-cubes.

Fill the tray 3/4 full to allow the ice to expand and place it in one of the freezer compartment.

Do not use metallic instruments to remove the tray from the freezer.

Fresh food refrigeration

To obtain the best performance, do not store warm food or evaporating liquids in the refrigerator; do cover or wrap the food, particularly if it has a strong flavour.

Do not cover the shelves with any protective material, such as paper, cardboard or plastic, which may obstruct the air circulation through them.

To help you use your refrigerator correctly, here are some more useful hints:

Raw meat (beef, pork, lamb & wild poultry): wrap in polythene bags and place on top of the salad drawer.

Meat can only be stored safely in this way for one or two days at the most.

Fruit & vegetables: these should be thoroughly cleaned and placed in the bottom salad drawers.

Butter & cheese: these should be placed in special airtight containers or wrapped in aluminium foil or polythene bags to exclude as much air as possible.

Milk bottles: these should have a cap and should be stored in the bottle rack on the door.

Download from Www.Somanuals.com. All Manuals Search And Download.

Movable shelves

The walls of the refrigerator have runners so that shelves can be positioned as desired.

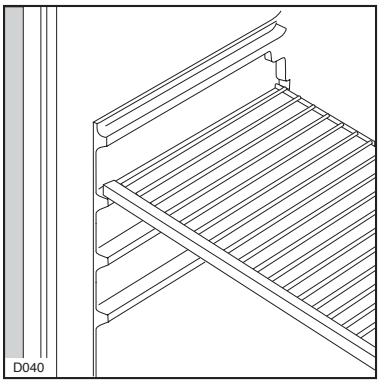

The door shelves can be easily removed for cleaning

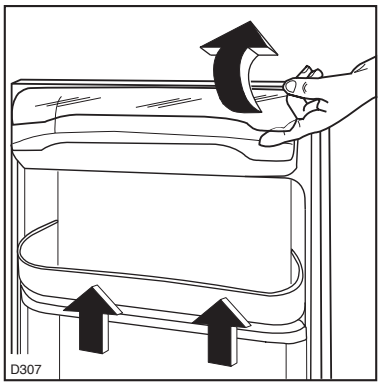

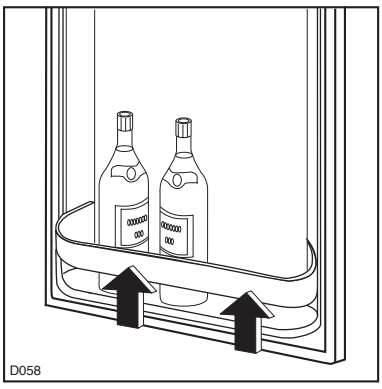

Freezing Calendar

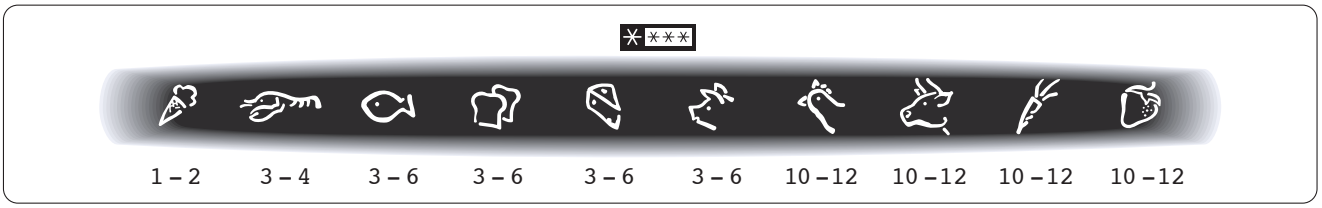

The symbols show different types of frozen goods.
The numbers indicate storage times in months for the appropriate types of frozen goods. Whether the upper or lower value of the indicated storage time is valid depends on the quality of the foods and pre-treating before freezing.

Download from Www.Somanuals.com. All Manuals Search And Download.

HINTS AND TIPS

Normal Operating Sounds

- You may hear faint gurgling or bubbling sounds when the refrigerant is pumped through the coils or tubing at the rear, to the cooling plate/evaporator.
- When the compressor is on, the refrigerant is being pumped round, and you will hear a whirring sound or pulsating noise from the compressor.
- A thermostat controls the compressor, and you will hear a faint 'click' when the thermostat cuts in and out.

Food Storage

To obtain the best performance from your fridge-freezer

- Do not store warm food or evaporating liquids.
- Avoid buying frozen food if you cannot store it straight away. The use of an insulated container is advisable. When you arrive home place the frozen food in the freezer immediately.
- Keep the time between buying chilled food and placing it in your refrigerator as short as possible.
- Do not push food together too much, try to allow air to circulate around each item.
- Do not store food uncovered.
- Ensure that food placed in the freezer is dated and labelled and used in date order to ensure that food is consumed at its best.
- Remove suspect food from your refrigerator and clean, refer to Maintenance and Cleaning.
- Lean food keeps better and longer than fatty food, salt reduces the storage time.
- Wrap the food in polythene or aluminium freezing bags or foil so that they adhere to the food and provide an airtight seal .
- Packaging which is swollen or has traces of refrozen water droplets on the pack could indicate that the product has not been kept at a suitable temperature and that it may have lost its original quality. Partially thawed food must not be refrozen, it must be consumed within 24 hours. Never exceed the storage times indicated by the manufacturer.

Energy Saving Advice

- Do not install the appliance close to sources of heat, such as a boiler or radiator.
- Locate the appliance in a cool well ventilated room and make sure that the air openings of the appliance are not obstructed.
- Avoid unnecessary frosting in the cabinet by packing all foodstuffs into airtight packages before placing them in the freezer.
- Always leave warm food to cool down to room temperature before placing in the fridge.
- Food which is to be frozen (when cool) should be placed in the fridge before being transferred to the freezer.
- Thaw frozen food in the fridge. This will ensure safer defrosting of foods and reduce the work of the refrigeration unit.
- Try to avoid keeping the door open for long periods or opening the door too frequently as warm air will enter the cabinet and cause the compressor to switch on unnecessarily often.
- Ensure there are no obstructions preventing the door from closing properly.

In the Event of a Power Failure

If there is a power failure during the storage of frozen foods, keep the door closed. If the temperature within your freezer should rise, do not refreeze the food without checking its condition. The following guidelines should assist you:

Ice-cream: Once thawed should be discarded.

Fruits & Vegetables: If soft should be cooked and used up.

Breads & Cakes: Can be refrozen without danger.

Shellfish: Should be refrigerated and used up quickly.

Cooked Dishes: i. e. casseroles should be refrigerated and used up.

Large Pieces of Meat: Can be refrozen providing there are still ice crystals remaining within them.

Small Joints: Should be cooked and can then be refrozen as cooked dishes.

Chicken: Should also be cooked and refrozen as a fresh dish.

Download from Www.Somanuals.com. All Manuals Search And Download.

MAINTENANCE AND CLEANING

Before any maintenance or cleaning work is carried out, DISCONNECT the appliance from the ELECTRICITY supply.

Internal cleaning

Clean the inside and accessories with warm water and bicarbonate of soda (5ml to 0.5 litre of water). Rinse and dry thoroughly.

⚠ **NEVER USE DETERGENTS, ABRASIVE POWDERS, HIGHLY PERFUMED CLEANING PRODUCTS OR WAX POLISHES, TO CLEAN THE INTERIOR AS THESE WILL DAMAGE THE SURFACE AND LEAVE A STRONG SMELL.**

External cleaning

Many proprietary kitchen surface cleaners contain chemicals that can attack/damage the plastics used in this appliance. For this reason it is recommended that the outer casing of this appliance is only cleaned with warm water with a little washing-up liquid added.

An accumulation of dust will affect the performance of the appliance and cause excessive electricity consumption.

Once or twice a year dust the condenser (black grill) and the compressor at the back of the appliance, with a brush or vacuum cleaner, see figure.

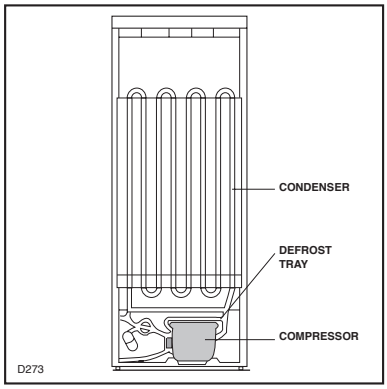

When the appliance is not in use

When the appliance is not in use for long periods, disconnect from the electricity supply, empty all foods and clean the appliance, leaving the doors ajar to prevent unpleasant smells.

Changing the light bulb

Should the interior light fail to work, first switch off the appliance and disconnect from the electricity supply, then replace the bulb as follows;

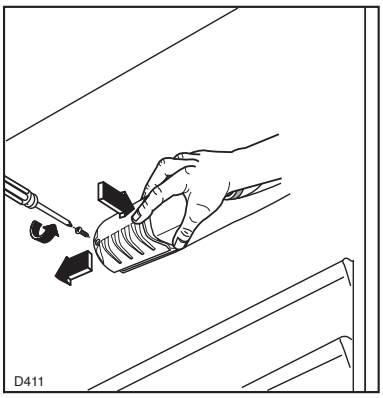

Unscrew the light cover and then pull it outward by pressing as shown in the figure. Unscrew the bulb and replace it with a new 15 watt bulb (available from your nearest Service Force Centre).

Replace the light cover by sliding it into its original position and replacing the screw.

Defrosting

Refrigerator

The refrigerator automatically defrosts every time the compressor stops. The water is discharged, via the pipe, into a tray located at the back of the appliance above the compressor, where it evaporates.

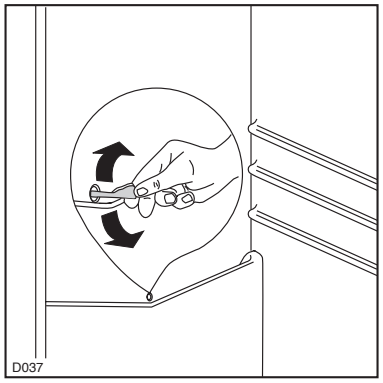

⚠ Important

To avoid defrost water overflowing into the fridge, periodically clean the water discharge hole in the centre of the V shaped drip collector at the back of the refrigerator compartment behind the fruit and vegetable drawer. Use the defrost cleaner provided which you will find already inserted into the discharge hole.

Remember to wash the defrost cleaner in hot soapy water at regular intervals. Dry throughly before replacing.

Download from Www.Somanuals.com. All Manuals Search And Download.

Freezer

When the frost has reached a thickness of up to 4mm it can be removed using a plastic scraper. During this operation it is not necessary to disconnect the appliance from the mains and remove the food. Never use metal tools for this operation.

For complete defrosting (once or twice a year) proceed as follows:

- turn the thermostat dial to the «OFF» position (O) or disconnect the appliance from the mains.
- Remove any food from inside the freezer and fridge, wrap it in several sheets of newspaper and store in a cool,dry place.
- Leave the door open.
- Clean and dry thoroughly.
- Reconnect the appliance to the mains or reset the thermostat to a functioning position.
- After letting the appliance run for a least half an hour, replace the previously removed food into the compartment.



Important

When defrosting the freezer, the fridge is also controlled by the thermostat and will not be operational during this period. A temperature rise of the frozen food packs, during defrosting, may shorten their safe storage life.

Download from Www.Somanuals.com. All Manuals Search And Download.

SOMETHING NOT WORKING

Important: If you call out an engineer to a fault listed below, or to repair a fault caused by incorrect use or installation a charge will be made, even if the appliance is under guarantee.

Before contacting your local Service Force Centre, check the following points:

Symptom	Solution
No power to the appliance	Check there is power at the socket.
	Check there is not a power cut by checking the household lights.
	Check the fuse has not blown.
The light does not come on	Ensure that the bulb is correctly fitted.
	Replace the bulb if it has blown.
	Check the door light switch is not jammed.
The temperature in the fridge or freezer section is too high	Check the thermostat control knob in the fridge is turned to the correct setting relative to ambient conditions.
	Check the ambient temperature is within the appliance's operating limits of 10°C to 32°C.
The freezer door will not open	Has door just been opened? If so leave for a few minutes to allow the air pressure to equalise.
The compressor runs continously	Adjust the thermostat control knob to give correct temperature control. See "Setting the temperature".
	Check that the doors are closed.
	Large quantities of food have recently been placed in the cabinet and/or door is frequently opened.
	Check that air ventilation is not obstructed.
Excessive frost and ice has built up	Ensure the doors are not left open.
	Check that nothing is preventing the doors from closing.
	Is the door gasket intact and clean.
	Has advised periodic defrosting been carried out.
Noise	Refer to normal operating sounds.
Water under the salad bin	Check the drain hole is not blocked. (see Maintenance and Cleaning).

If, after the above checks, there is still a fault, call your local Service Force Centre.

In-guarantee customers should ensure that the above checks have been made as the engineer will make a charge if the fault is not a mechanical or electrical breakdown.

Please note that proof of purchase is required for any in-guarantee service call.

Download from Www.Somanuals.com. All Manuals Search And Download.

SERVICE AND SPARE PARTS

In the event of your appliance requiring service, or if you wish to purchase spare parts, please contact your local Tricity Bendix Service Force Centre by telephoning:-

0870 5 929929

Your telephone call will be automatically routed to the Service Force Centre covering your post code area.

For the address of your local Service Force Centre and further information about Service Force, please visit the website at www.serviceforce.co.uk

Before calling out an engineer, please ensure you have read the details under the heading 'Something Not Working?

When you contact the Service Force Centre you will need to give the following details:

1. Your name, address and post code
2. Your telephone number
3. Clear and concise details of the fault
4. The model and serial number of the appliance (found on the rating plate)
5. The purchase date

Please note that a valid purchase receipt or guarantee documentation is required for in-guarantee service calls.

CUSTOMER CARE DEPARTMENT

For general enquiries concerning your Tricity Bendix appliance or for further information on Tricity Bendix products, please contact our Customer Care Department by letter or telephone as follows:-

Customer Care Department

Tricity Bendix

55-77 High Street

Slough

Berkshire

SL1 1DZ

08705 950 950 *

* calls to this number may be recorded for training purposes.

Download from Www.Somanuals.com. All Manuals Search And Download.

GUARANTEE CONDITIONS

Standard guarantee conditions

We, Tricity Bendix, undertake that if within 12 months of the date of the purchase this Tricity Bendix appliance or any part thereof is proved to be defective by reason only of faulty workmanship or materials, we will, at our option repair or replace the same FREE OF CHARGE for labour, materials or carriage on condition that:

The appliance has been correctly installed and used only on the electricity supply stated on the rating plate.

The appliance has been used for normal domestic purposes only, and in accordance with the manufacturer's instructions.

The appliance has not been serviced, maintained, repaired, taken apart or tampered with by any person not authorised by us.

All service work under this guarantee must be undertaken by a Tricity Bendix Service Force Centre. Any appliance or defective part replaced shall become the Company's property.

This guarantee is in addition to your statutory and other legal rights.

Home visits are made between **8.30am and 5.30pm** Monday to Friday. Visits may be available outside these hours in which case a **premium** will be charged.

Exclusions

This guarantee does not cover:

Damage or calls resulting from transportation, improper use or neglect, the replacement of any light bulbs or removable parts of glass or plastic.

Costs incurred for calls to put right an appliance which is improperly installed or calls to appliances outside the European Community (EC) or European Free Trade Area.

Appliances found to be in use within a commercial environment, plus those which are subject to rental agreements.

Products of Tricity Bendix manufacture which are not marketed by Tricity Bendix.

European Guarantee

If you should move to another country within Europe then your guarantee moves with you to your new home subject to the following qualifications:

The guarantee starts from the date you first purchased your product.

The guarantee is for the same period and to the same extent for labour and parts as exists in the new country of use for this brand or range of products.

This guarantee relates to you and cannot be transferred to another user.

Your new home is within the European Community (EC) or European Free Trade Area.

The product is installed and used in accordance with our instructions and is only used domestically, i.e. a normal household.

The product is installed taking into account regulations in your new country.

Before you move please contact your nearest Customer Care centre, listed below, to give them details of your new home. They will then ensure that the local Service Organisation is aware of your move and able to look after you and your appliances.

France	Senlis	+33 (0)3 44 62 20 13
Germany	Nürnberg	+49 (0)800 234 7378
Italy	Pordenone	+39 (0)800117511
Sweden	Stockholm	+46 (0)20 78 77 50
UK	Slough	+44 (0)1753 219898

Download from Www.Somanuals.com. All Manuals Search And Download.

TECHNICAL SPECIFICATIONS

DIMENSIONS		
	Height	120 cm
	Width	50 cm
	Depth	60 cm
POWER SUPPLY VOLTAGE AND FREQUENCY		220-240 V / 50 Hz
TOTAL POWER ABSORBED		100 W
AVERAGE DAILY UNITS ELECTRICITY *		0.84 kWh
GROSS CAPACITY		
	Fridge	138 l
	Freezer	42 l
NET CAPACITY		
	Fridge	136 l
	Freezer	42 l

* This figure is based on standard test results in accordance with European Standard EN 153.

Actual consumption will depend on how the appliance is used and where it is located.

Download from Www.Somanuals.com. All Manuals Search And Download.

INSTALLATION

⚠ Warning

IF YOU ARE DISCARDING AN OLD APPLIANCE THAT HAS A LOCK OR CATCH ON THE DOOR, YOU MUST ENSURE THAT IT IS MADE UNUSABLE TO PREVENT YOUNG CHILDREN BEING TRAPPED INSIDE.

Depending upon the position which you choose for your appliance, you may wish to reverse the way in which the door opens. To do this, refer to instructions on “Door reversal directions” paragraph.

Important

It must be possible to disconnect the appliance from the mains power supply; the plug must therefore be easily accessible after installation.

Positioning

This appliance is designed to operate in ambient temperatures between 10°C (50°F) and 32°C (90°F). It should be located in a dry atmosphere, out of direct sunlight and away from extreme temperature e.g. not next to a boiler or radiator, or in a very cold room e.g. an outhouse, where the temperatures may fall below 10°C (50°F). If these temperatures are exceeded i.e. colder or warmer, then the appliance may not operate correctly.

You should also ensure that air can circulate freely around the back and the top of the cabinet. There must also be at least 100 mm (4”) distance between the top of the cabinet and any overhanging kitchen furniture (A). Ideally, the appliance should not be positioned beneath overhanging furniture (B).

There should also be a gap of 25 mm either side of the appliance. Do not obstruct the space underneath.

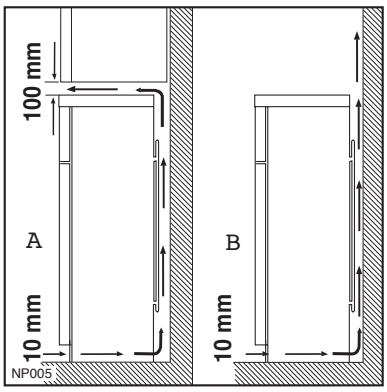

Rear spacers

The plastic bag containing all relevant documentation also contains two spacers to be fitted into special holes in the back of the appliance.

Fit the spacers into the holes, taking care to ensure that the arrow (A) is positioned as shown in the diagram. Then turn them through 45° (arrow (A) vertical) until they lock into place.

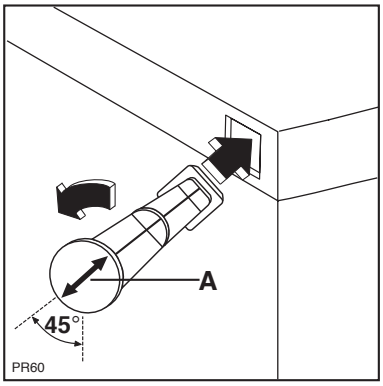

DO NOT install in places with restricted ventilation.

Adjust the level of the appliance by screwing out the adjustable foot, or feet, at the bottom of the cabinet using your fingers.

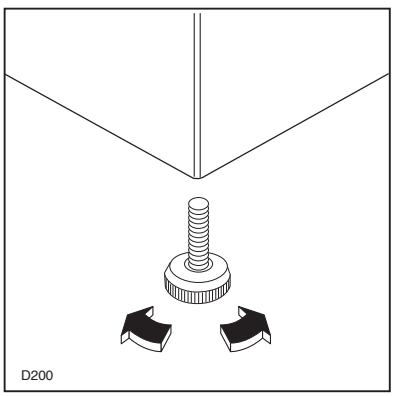

Download from Www.Somanuals.com. All Manuals Search And Download.

⚠ Electrical connections

Any electrical work required to install this appliance should be carried out by a qualified electrician or competent person.

WARNING: THIS APPLIANCE MUST BE EARTHED.

The manufacturer declines any liability should this safety measure not be observed.

If the plug that is fitted to your appliance is not suitable for your socket outlet, it must be cut off and the appropriate plug fitted.

Remove the fuse from the cut off plug.

The cut off plug should then be disposed of to prevent the hazard of shocks in case it should be plugged into a 13amp socket in another part of your home.

⚠ Important

The wires in the mains lead are coloured in accordance with the following code:

Green and Yellow	**- Earth**
Blue	**- Neutral**
Brown	**- Live**

If you fit your own plug, the colours of the wires in the mains lead of your appliance may not correspond with the markings identifying the terminals in your plug, proceed as follows:

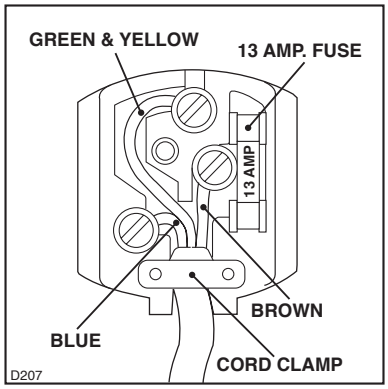

Connect the Green and Yellow (earth) wire to the terminal in the plug which is marked with the letter «E» or the earth symbol ⏚ or coloured green and yellow.

Connect the blue (neutral) wire to the terminal in the plug which is marked with the letter «N» or coloured black.

Connect the brown (live) wire to the terminal in the plug which is marked with the letter «L» or coloured red.

The plug moulded onto the lead incorporates a fuse. For replacement, use a 13amp BSI362 fuse. Only ASTA or BSI approved fuses should be used.

The plug must not be used if the fuse cover/carrier is lost. The cover/carrier is indicated by the coloured insert at the base of the plug.

A replacement cover/carrier must be obtained from your local Tricity Bendix Service Force Centre.

This appliance complies with the E.E.C. Directive No. 87/308 of 2.6.87 relative to radio interference suppression.

CE This appliance complies with the following E.E.C. Directives:

- **73/23 EEC of 19.2.73** (Low Voltage Directive) and subsequent modifications;
- **89/336 EEC of 3.5.89** (Electromagnetic Compatibility Directive) and subsequent modifications.

Please ensure that when the appliance is installed it is easily accessible for the engineer in the event of a breakdown.

Download from Www.Somanuals.com. All Manuals Search And Download.

Door reversal directions

1. Disconnect from the electricity supply.
2. Remove all loose items, including food, store food in a cool place.
3. Gently lay the fridge/freezer on its back with the top held away from the floor by 5-8 cm (2-3 inches) of packing;
4. Remove the feet (2-3)
5. Remove bottom hinge (1).
6. Remove the freezer door by releasing it from the middle hinge (H).
7. Unscrew the middle hinge.
8. Slide out the fridge door from pin (G), unscrew the latter and then screw it down into the hinge hole provided on the opposite side, after having removed the small plugs which should then be fitted on the opposite side.
9. Refit the fridge door and replace the middle hinge to the left hand side.
10. Replace the door and bottom hinge (1) on the opposite side.
11. Refit the feet (2-3) on the opposite side.
12. Unscrew the handles. Refit them on the opposite side after having pierced the plugs with a punch. Cover the holes left open with the plugs contained in the documentation pack.

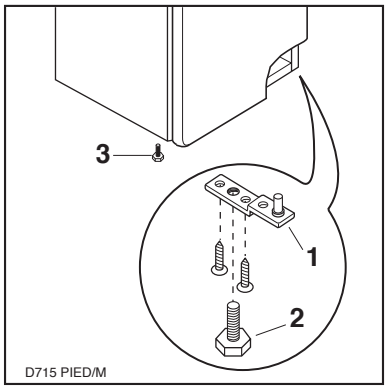

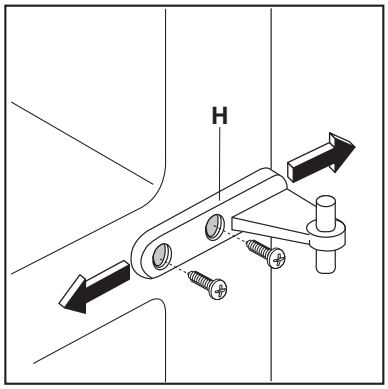

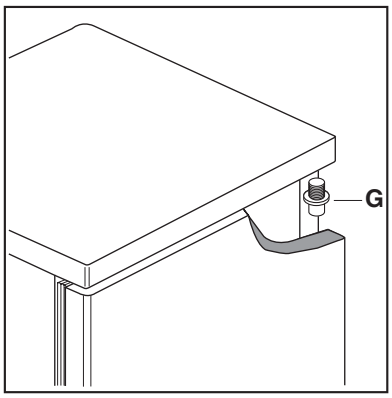

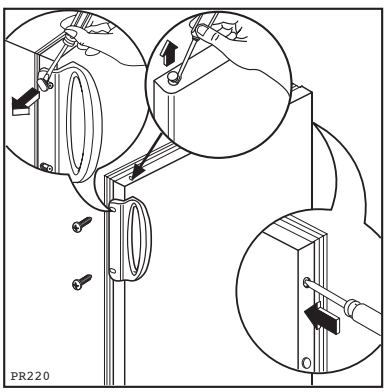

Attention

After completion of the door reversing operation, check that the door gasket adheres to the cabinet. If the ambient temperature is cold (i.e. in Winter), the gasket may not fit perfectly to the cabinet. In that case, wait for the natural fitting of the gasket or accelerate this process by heating up the part involved with a normal hairdryer on a low setting.

Download from Www.Somanuals.com. All Manuals Search And Download.

Download from Www.Somanuals.com. All Manuals Search And Download.

Download from Www.Somanuals.com. All Manuals Search And Download.

TRICITY BENDIX

Tricity Bendix, 55-77 High Street, Slough, Berkshire SL1 1DZ

Consumer care telephone number……08705 950950

© Electrolux Household Appliances Limited 2002

From the Electrolux Group. *The world's No.1 choice.*

The Electrolux Group is the world's largest producer of powered appliances for kitchen, cleaning and outdoor use. More than 55 million Electrolux Group products (such as refrigerators, cookers, washing machines, vacuum cleaners, chain saws and lawn mowers) are sold each year to a value of approx. USD 14 billion in more than 150 countries around the world.

Download from Www.Somanuals.com. All Manuals Search And Download.

Free Manuals Download Website

http://myh66.com

http://usermanuals.us

http://www.somanuals.com

http://www.4manuals.cc

http://www.manual-lib.com

http://www.404manual.com

http://www.luxmanual.com

http://aubethermostatmanual.com

Golf course search by state

http://golfingnear.com

Email search by domain

http://emailbydomain.com

Auto manuals search

http://auto.somanuals.com

TV manuals search

http://tv.somanuals.com