Slim Bottle Cooler

Instruction manual



Model:

CS586-A

Safety Tips

- Position on a flat, stable surface.
- A service agent/qualified technician should carry out installation and any repairs if required. Do not remove any components or service panels on this product.
- Consult Local and National Standards to comply with the following:
  - Health and Safety at Work Legislation
  - Fire Precautions
  - Wiring Regulations
  - Building Regulations
- DO NOT immerse in water, or use steam/jet washers to clean the unit.
- DO NOT use the appliance outside.
- DO NOT use this appliance to store medical supplies.
- DO NOT allow oil or fat to come into contact with the plastic components or door seal. Clean immediately if contact occurs.
- Always carry, store and handle the appliance in a vertical position and move by holding the base of the appliance.
- Always switch off and disconnect the power supply to the unit before cleaning.
- Keep all packaging away from children. Dispose of the packaging in accordance with the regulations of local authorities.
- If the power cord is damaged, it must be replaced by a POLAR agent or a recommended qualified technician in order to avoid a hazard.
- This appliance is not intended for use by persons (including children) with reduced physical, sensory or mental capabilities, or lack of experience or knowledge, unless they have been given supervision or instruction concerning the use of the appliance by a person responsible for their safety.

CS586-A_A5_v1_20200306.indb 2 2020/3/6 10:13

- Polar recommends that this appliance should be periodically tested (at least annually) by a Competent Person. Testing should include, but not be limited to: Visual Inspection, Polarity Test, Earth Continuity, Insulation Continuity and Functional Testing.

Caution Risk of Fire 

- Do not store explosive substances such as aerosol cans with a flammable propellant in this appliance.



Warning: Keep all ventilation openings clear of obstruction. Unit should not be boxed in without adequate ventilation.

- **Warning:** Do not use mechanical devices or other means to accelerate the defrosting process, other than those recommended by the manufacturer.
- **Warning:** Do not damage the refrigerant circuit.
- **Warning:** Do not use electrical appliances inside the food storage compartments of the appliance, unless they are the type recommended by the manufacturer.

Introduction

Please take a few moments to carefully read through this manual. Correct maintenance and operation of this machine will provide the best possible performance from your POLAR product.

Pack Contents

The following is included:

- Polar Slim Bottle Cooler
- Shelves (4x)
- Instruction manual

POLAR prides itself on quality and service, ensuring that at the time of packaging the contents are supplied fully functional and free of damage.

Should you find any damage as a result of transit, please contact your POLAR dealer immediately.

CS586-A_A5_v1_20200306.indb 3 2020/3/6 10:13

Installation

Note: If the unit has not been stored or moved in an upright position, let it stand upright for approximately 12 hours before operation. If in doubt allow to stand.

1. Remove the appliance from the packaging. Make sure that all protective plastic film and coatings are thoroughly removed from all surfaces.
2. Maintain a distance of 20cm (7 inches) between the unit and walls or other objects for ventilation. **NEVER LOCATE NEXT TO OR NEAR A HEAT SOURCE.**

Note: Before using the appliance for the first time, clean the shelves and interior with soapy water.

3. If necessary, adjust the screw feet of the appliance to make it level.

Reversing the door

Depending on the location of the appliance, it may be necessary to change the direction the door opens by changing the side of the door handle.

To reverse the door handle:

1. The door handle is on the left side. Disassemble the right upper hinge and the hinge cover.

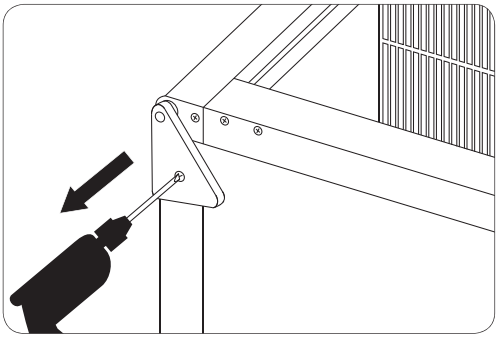

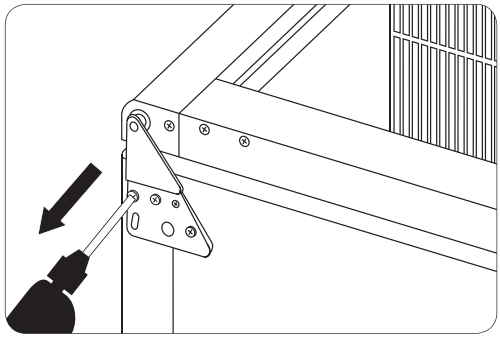

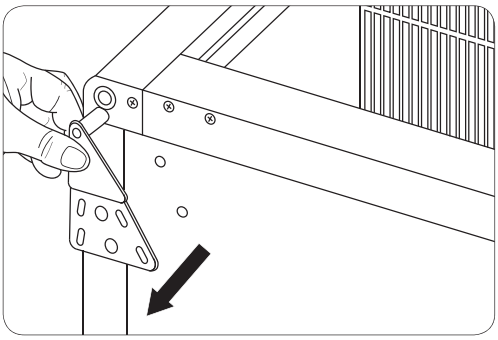

CS586-A_A5_v1_20200306.indb 4 2020/3/6 10:13

2. Remove the door and disassemble the right lower hinge.

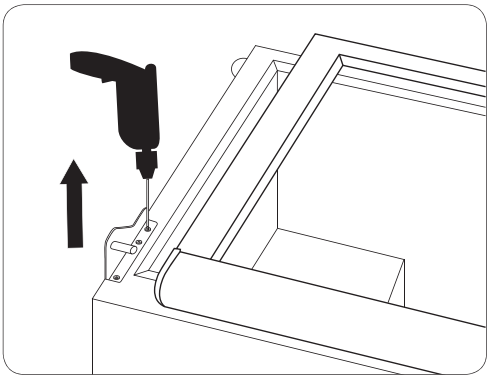

3. Install the left lower hinge.

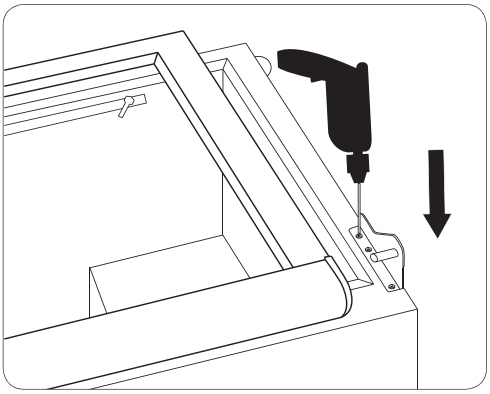

4. Reverse the door and mount it onto the left lower hinge.

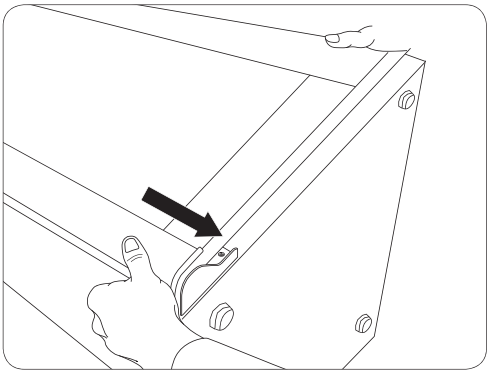

5. Install the left upper hinge and hinge cover.

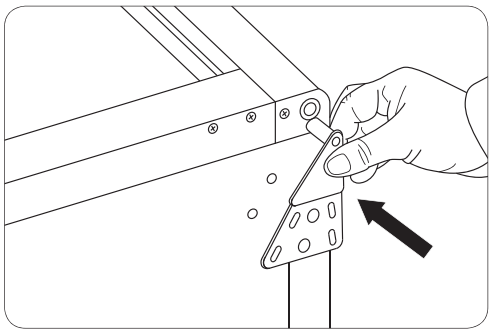

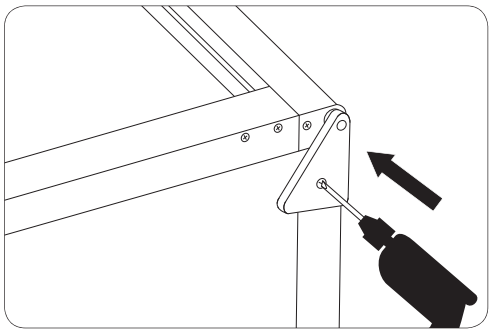

6. Now the door handle is on the right.



CS586-A_A5_v1_20200306.indb 5 2020/3/6 10:13

Operation

Control Panel

The control panel is located at the front of the cabinet.

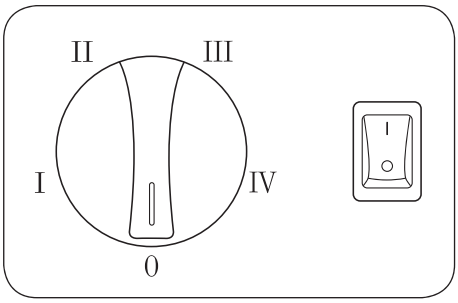

Turn On

1. Turn the thermostat to the desired temperature setting:
   I (cool) to **IV** (Cold)

Note: Setting the switch to '0' turns off the appliance.

2. Close the door of the appliance.
3. Connect the appliance to a mains power supply.

Cleaning, Care & Maintenance

Switch off and disconnect from the power supply before cleaning.

- Clean the interior of the appliance as often as possible.
- Do not use abrasive cleaning agents. These can leave harmful residues.
- Clean the door seal with warm soapy water.
- Always wipe dry after cleaning.
- A POLAR agent or qualified technician must carry out repairs if required.
- If left unused for any length of time, store the appliance with the door ajar.

Auto Defrost

Periodically the appliance will run an automatic defrost cycle to prevent any ice build-up.

Cleaning the Condenser

Periodic cleaning of the Condenser can extend the life of the appliance. POLAR recommend that a POLAR agent or qualified technician clean the condenser.

CS586-A_A5_v1_20200306.indb 6 2020/3/6 10:13

Troubleshooting

If your POLAR appliance develops a fault, please check the following table before making a call to the Helpline or your POLAR dealer.

Fault	Probable Cause	Solution
The appliance is not working	The unit is not switched on	Check the unit is plugged in correctly and switched on
	Plug and lead are damaged	Call POLAR agent or qualified Technician
	Fuse in the plug has blown	Replace the fuse
	Power supply	Check power supply
	Internal wiring fault	Call POLAR agent or qualified Technician
The appliance turns on, but the temperature is too high/low	Too much ice on the evaporator	Defrost the appliance
	Condenser blocked with dust	Call POLAR agent or qualified Technician
	Door not shut properly	Check door is shut and seals are not damaged
	Appliance is located near a heat source or air flow to the condenser is being interrupted	Move the refrigerator to a more suitable location
	Ambient temperature is too high	Increase ventilation or move appliance to a cooler position
	Appliance is overloaded	Reduce the amount of food stored in the appliance
The appliance is unusually loud	Loose nut/screw	Check and tighten all nuts and screws
	The appliance has not been installed in a level or stable position	Check installation position and change if necessary

Technical Specifications

Model	Voltage	Power	Current	Range	Capacity (Litres)	Refrigerant	Dimensions H x W x D mm	Weight (kg)
CS586-A	220-240V 50Hz	165W	1.0A	+2°C ~ +8°C	301	R600a 60g	1900 x 448 x 682	71

CS586-A_A5_v1_20200306.indb 7 2020/3/6 10:13

Electrical Wiring

The plug is to be connected to a suitable mains socket.

POLAR appliances are wired as follows:

- Live wire (coloured brown) to terminal marked L
- Neutral wire (coloured blue) to terminal marked N
- Earth wire (coloured green/yellow) to terminal marked E

This appliance must be earthed.



If in doubt consult a qualified electrician.

Electrical isolation points must be kept clear of any obstructions. In the event of any emergency disconnection being required they must be readily accessible.

Compliance

The product must not be disposed of as household waste. To help prevent possible harm to human health and/or the environment, the product must be disposed of in an approved and environmentally safe recycling process. For further information on how to dispose of this product correctly, contact the product supplier, or the local authority responsible for waste disposal in your area.

POLAR parts have undergone strict product testing in order to comply with regulatory standards and specifications set by international, independent, and federal authorities.

POLAR products have been approved to carry the following symbol:



All rights reserved. No part of these instructions may be produced or transmitted in any form or by any means, electronic, mechanical, photocopying, recording or otherwise, without the prior written permission of POLAR.

Every effort is made to ensure all details are correct at the time of going to press, however, POLAR reserve the right to change specifications without notice.

CS586-A_A5_v1_20200306.indb 8 2020/3/6 10:13

DECLARATION OF CONFORMITY

• Conformiteitsverklaring • Déclaration de conformité • Konformitätserklärung • Dichiarazione di conformità • • Declaración de conformidad • Declaração de conformidade

Equipment Type • Uitrustingstype • Type d'équipement • Gerätetyp • Tipo di apparecchiatura • Tipo de equipo • Tipo de equipamento			**Model** • Modèle • Modell • Modello • Modelo • Malli
G-Series Slimline Upright Back Bar Cooler 300Ltr			CS586
Application of Territory Legislation & Council Directives(s) Toepassing van Europese Richtlijn(en) • Application de la/des directive(s) du Conseil • Anwendbare EU-Richtlinie(n) • Applicazione delle Direttive • Aplicación de la(s) directiva(s) del consejo • Aplicação de directiva(s) do Conselho	**Machinery Directive 2006/42/EC** EN 60335-1:2012 +A11:2014 +A13:2017 EN 60335-2-89:2010 +A1:2016 +A2:2017 EN 62233:2008 **Electro-Magnetic Compatibility (EMC) Directive 2014/30/EU - recast of 2004/108/EC** EN 55014-1:2017 EN 55014-2:2015 EN 61000-3-2:2014 EN 61000-3-3:2013 **Restriction of Hazardous Substances Directive (RoHS) 2015/863 amending Annex II to Directive 2011/65/EU**		**Electrical Safety** IEC 60335-1:2010 + A1:2013 +A2:2016 IEC 60335-2-89:2010 +A1:2012 +A2:2015 **Electromagnetic Compatibility** EN 55014-1:2017 EN 55014-2:2015 EN 61000-3-2:2014 EN 61000-3-3:2013
Producer Name • Naam fabrikant • Nom du producteur • Name des Herstellers • Nome del produttore • Nombre del fabricante • Nome do fabricante			**Polar**
Producer Address • Adres fabrikant • Adresse du producteur • Anschrift des Herstellers • Indirizzo del produttore • Dirección del fabricante • Morada do fabricante	**Fourth Way, Avonmouth, Bristol, BS11 8TB United Kingdom**	**42 North Point Business Park New Mallow Road Cork Ireland**	**15 Bagdally Road, Campbelltown NSW 2560**

I, the undersigned, hereby declare that the equipment specified above conforms to the above Territory Legislation, Directive(s) and Standard(s).
Ik, de ondergetekende, verklaar hierbij dat de hierboven gespecificeerde uitrusting goedgekeurd is volgens de bovenstaande Richtlijn(en) en Standaard(en).
Je soussigné, confirme la conformité de l'équipement cité dans la présente à la / aux Directive(s) et Norme(s) ci-dessus
Ich, der/die Unterzeichnende, erkläre hiermit, dass das oben angegebene Gerät der/den oben angeführten Richtlinie(n) und Norm(en) entspricht.
Il sottoscritto dichiara che l'apparecchiatura di sopra specificata è conforme alle Direttive e agli Standard sopra riportati.
El abajo firmante declara por la presente que el equipo arriba especificado está en conformidad con la(s) directiva(s) y estándar(es) arriba mencionadas.
Eu, o abaixo-assinado, declaro que o equipamento anteriormente especificado está em conformidade com a(s) anterior(es) Directiva(s) e Norma(s)

Date • Data • Date • Datum • Data • Fecha • Data
Signature • Handtekening • Signature • Unterschrift Firma • Firma • Assinatura

Full Name • Volledige naam • Nom et prénom • Vollständiger Name • Nome completo • Nombre completo • Nome por extenso

Position • Functie • Fonction • Position • Qualifica • Posición • Função

4th March 2020	
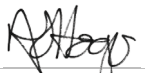	
Ashley Hooper	**Josie Holt**
Technical & Quality Manager	**Commercial Manager/ Responsible Supplier**

http://www.polar-refrigerator.com/

CS586-A_A5_v1_20200306