THOR KITCHEN®

USE + CARE MANUAL

30 INCH 18.0 CU FT BOTTOM FREEZER REFRIGERATOR IN STAINLESS STEEL

TRF3017BF



REV.062026

USE & CARE MANUAL

30 INCH 18.0 CU FT BOTTOM FREEZER REFRIGERATOR IN STAINLESS STEEL

TRF3017BF

THOR KITCHEN®

Table of Contents

Warning

Warnings---------- 2

Safety and Warning Information

Basic safety symbol---------- 5
Appliance connection ---------- 5
Safety and warning information---------- 5

Product Introduction

Product features---------- 9
Product components---------- 10
Installation dimension---------- 11

Installation

Transportation---------- 12
Where to install your unit---------- 12
Adjustable plastic feet---------- 12

Operation

Before use ---------- 13
Water supply connection ---------- 13
Starting ---------- 13
Control panel ---------- 14
Refrigerator chamber ---------- 17
Freezing chamber ---------- 18
Storage of foods ---------- 19
Energy saving tips ---------- 19

Maintenance

Defrosting---------- 20
Cleaning ---------- 20
General information ---------- 20
Normal phenomena ---------- 21
Troubleshooting ---------- 22

WARNINGS

The refrigerant isobutene(R600a) is contained within the refrigerant circuit of the appliance,a natural gas with a high level of environmental compatibility,which is nevertheless flammable.
During transportation and installation of the appliance, ensure that none of the componentsof the refrigerant circuit becomes damaged.
The refrigerant (R600a) is flammable.

Symbol ISO 7010 W021 Warning;
Risk of fire/flammable materials

1. WARNING: The appliance must be positioned so that the plug is accessible.
2. WARNING: If the supply cord is damaged, it must be replaced by the manufacturer, its service agent or similarly qualified persons in order to avoid a hazard.
3. WARNING: Keep ventilation openings, in the appliance enclosure or in the built-in structure, clear of obstruction.
4. WARNING: Do not use mechanical devices or other means to accelerate the defrosting process, other than those recommended by the manufacturer.
5. WARNING: Do not damage the refrigerant circuit.
6. WARNING: Do not use electrical appliances in side the food storage compartments of the appliance, unles they are of the type recommended by the manufacturer.

C US
Drinking Water
NSF/ANSI/CAN 372
NSF/ANSI/CAN 61: Q≤1
MC 274353

WARNINGS

7.WARNING: This unit is using R600a as the Refrigerant and cyclopentance as Foaming agent, both of this two kind of materiral is easy to be burnt, so the abandoned unit should be away from the fire, and can not be treated with fire.

8.WARNING: Danger of electrical shock, the yellow-green earthing of this appliance must be earthed before operation.

9. WARNING: Refrigerator discarded after the need for disposal according to local laws and regulation.

10.WARNING:The refrigerant and insulation blowing gas are flammable.When disposing of the appliance, do so only at an authorized waste disposal centre. Do not expose to flame.

11.WARNING: When positioning the appliance, ensure the supply cord is not trapped or damaged.

12.WARNING: Do not locate multiple portable socket-outlets or portable power supplies at the rear of the appliance.

13.WARNING: To avoid contamination of food, please respect the following instructions.

– Opening the door for long periods can cause a significant increase of the temperature in the compartments of the appliance.

– Clean regularly surfaces that can come in contact with food and accessible drainage systems.

– Store raw meat and fish in suitable containers in the refrigerator, so that it is not in contact with or drip onto other food.

14.WARNING: Risk of child entrapment. Before you throw away your old refrigerator or freezer:

– Take off the doors

– Leave the shelves in place so that children may not easil climb inside.

WARNINGS

●Before performing any type of installation or cleaning, disconnect the refrigerator from the electrical source. When you are finished, reconnect the refrigerator to the electrical source and reset the temperature controls to the desired setting.

●If the led light is damaged, it must be replaced by the manufacturer, its service agent or similarly qualified persons in order to avoid a hazard.

●Before Installing the Water Supply Line, You Will Need：
– WARNING: fill with potable water only.
The water supply system must be installed and connected by a professional technician. Connect the refrigerator with the cold water pipe :
the maximum inlet water pressure is 690kPa;
the minimum inlet water pressure is 140kPa.
WARNING: Connect to potable water supply only.

●The new hose-sets supplied with the appliance are to be used and that old hose-sets should not be reused.



This symbol on the product or in its packing indicates that this product may not be treated as household waste. Instead, it should be taken to the appropriate waste collection point for the recycling of electrical and electronic equipment. By ensuring this product is disposed of correctly, you will help prevent potential negative consequences for the environment and human health, which could otherwise be caused by the inappropriate waste handling of this product. For more detailed information about the recycling of this product, please contact your local council, your household waste disposal service, or the shop where you purchased the product.

Safety and warning information

Basic safety symbol

This guide contains many important safety messages.
Always read and obey all safety messages.

This is the safety alert symbol. It alerts you to potential hazards that can kill or hurt you and others, or cause damage to the product. All safety messages will follow this safety alert symbol and a hazard signal word: DANGER, WARNING, or CAUTION. These words mean:

Indicates an imminently hazardous situation which, if not avoided, will result in death or serious personal injury.

Indicates a potentially hazardous situation which, if not avoided, could result in death or serious personal injury.

Indicates a hazardous situation which, if not avoided, may result in minor or moderate personal injury, or damage to the product.

To reduce the risk of fire, electric shock, or injury to persons when using your product, basic safety precautions must be followed, including the following:

Electrical Connection & Safety

Voltage Requirement: This appliance requires a single-phase alternating current (AC) of 110–115V / 60Hz.

Voltage Fluctuations: If the voltage in your area fluctuates beyond these limits, an automatic AC voltage regulator with a capacity of 350W or higher must be installed for safe operation. Failure to do so may damage the refrigerator's electrical components.

Safety and warning information

To reduce the risk of fire, electric shock, or injury to persons when using your product, basic safety precautions should be followed, including the following.
Read all instructions before using this appliance.

Safety and warning information

Safety and warning information

WARNING

Do not damage the refrigerant circuit.
Refrigerant will cause serious injury when it splashing into the eyes. If it happened please go to hospital immediately.

Keep ventilation openings, in the appliance enclosure or in the built-in structure, clear of obstruction.

Do not use electrical appliance inside the food storage chambers of the appliance, unless they are of the type recommended by the manufacturer.
Do not use mechanical devices or other means to accelerate the defrosting process,other than those recommended by the manufacturer.

The refrigerant and insulation blowing gas are flammable. When disposing of the appliance, do so only at an authorized waste disposal centre. Do not expose to flame.

CAUTION

This appliance is not intended for use by persons (including children) with reduced physical, sensory or mental capabilities, or lack of experience and knowledge, unless they have been given supervisionor instruction concerning use of the appliance by a person responsible for their safety.

Children should be supervised to ensure that they do not play with the appliance.

DANGER

Do not use or store inflammable materials ether, benzene, alcohol, medicine, LP gas, spray or cosmetics near or in the fridge. It may cause explosion or fire.

Do not put glassware in freezing chamber or refrigerator chamber air outlet, it may cause explosion or hurt.

Make sure of grounding.
Consult a qualified electrician or service person if the grounding instructions are not completely understood, or if you have doubts on whether the appliance is properly grounded.
The incorrect grounding may cause breakdown and electric shock.
Do not store explosive substances such as aerosol cans with a flammable propellant in this appliance.

This appliance is intended to be used in household and similar applications such as
– staff kitchen areas in shops, offices and other working environments;
– farm houses and by clients in hotels, motels and other residential type environments;
– bed and breakfast type environments;
– catering and similar non-retail applications.

Safety and warning information

Safety and warning information

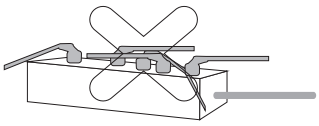

- The dedicated outlet should be used.
  Using several devices at one outlet may cause fire.

- Install the appliance in a dry, well ventilated room.

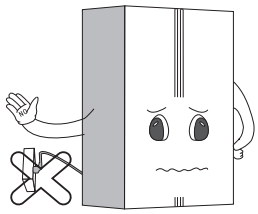

- The appliance should be place close to socket, it is easy to cut off the power supply at the time of the accident.

- Do not allow the power plug to face upward or to be squeezed at the back of the fridge.
  Water may be flown into or the plug may be damaged, which causes fire or electric shock.

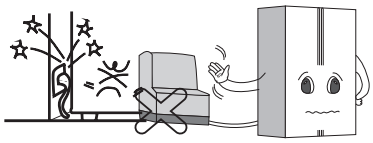

- Do not allow the power cord bent or pressed by the heavy object to be damaged. If it is damaged, it must be replaced by the service agent or a similarly qualified person in order to avoid a hazard.
  If the supply cord is damaged, it must be replaced by the manufacturer, its service agent or similarly qualified persons in order to avoid a hazard.

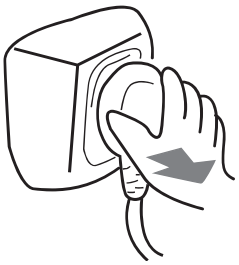

- Unplug the power plug when cleaning, handling the interior lamp of the fridge.
  It may cause electric shock or injury.
  If the LED lamp is damaged, it must be replaced by the manufacturer, its service agent.

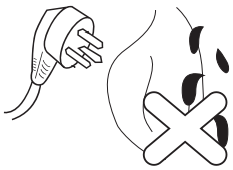

- Remove water or dust from the power plug with dry clean cloth, do not use wet hands touch it and insert it with the ends of the pins securely connected.

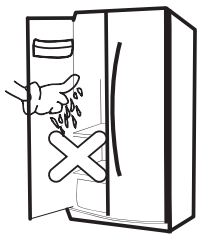

- Do not touch food or containers at the freezer with wet hands. It may cause frostbite.

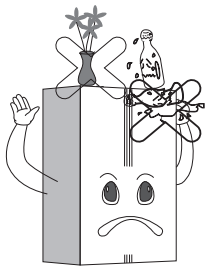

- Do not place the heavy object or the dangerous object, cup, flower vase, cosmetics, medicineor any container with water on the fridge.
  It may be dropped to cause injury, fire or electric shock when opening or closing the door.

- Do not spray water at the outside or the inside of the fridgeor do not clean it with benzene or thinner.

Safety and warning information

Safety and warning information

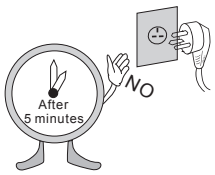

■ Wait for 5 minutes or longer when reconnecting the plug.
It may cause the operation of the freezer to fail.

■ Do not use the fridge for non-domestic perpose(storing medicine or testing material, blood, using at the ship, etc.)
It may cause an unexpected risk such as fire, electric shock, deterioration of stored material or chemical reaction.

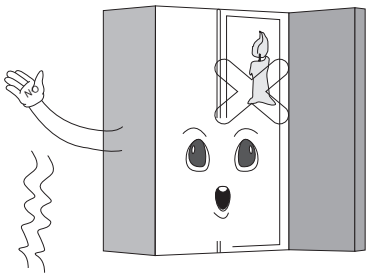

■ Do not use drier to dry the inside, nor light a candle to remove odor. It may cause explosion or fire.

■ Do not cling to the door or the trays of the door.
It may make the fridge fallen down or damage the hands.
Especially, do not allow the children to do the above.

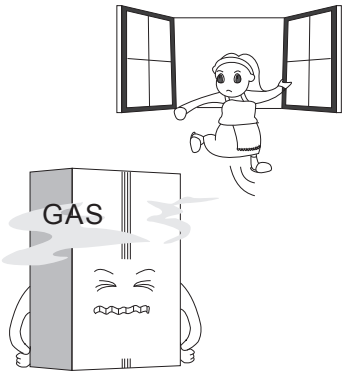

■ When gas is leaked, do not touch the fridge or the outlet and ventilate the room immediately.
The explosion by spark may cause fire or burn.
When the gas is leaked by the severe damage during delivering, installing or using the fridge, any spark may cause fire or burn.

■ Do not insert the hands or the metal stick into the exit of cool air, the cover, the bottom of the fridge, the heatproof grill(exhaust hole)at the backside.
It may cause electric shock or injury.

■ Do not put ice in thin crystal cup or ceramic ware.
It may break cup or ceramic ware to cause injury.

■ If the supply cord is damaged, it must be replaced by the manufacturer, its service agent or similarly qualified persons in order to avoid a hazard.

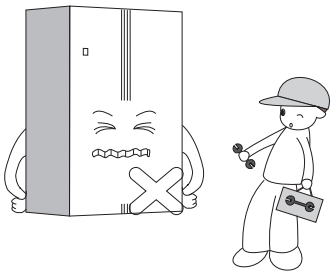

■ Use the submerged the fridge after checking it.
It may cause electric shock or fire.

■ Do not install the fridge in the wet place or the place which water or rain splashes.
Deterioration of insulation of electric parts may cause electric leakage. Please check the fridge regularly.

■ Do not allow any person except the qualified engineer to disassemble, repair or alter the fridge.
It may cause injury, electric shock or fire.

Product Introduction

Product features

- Energy saving and noise reduction
  It contains super freeze, energy saving, noise reduction, optimal refrigeration system to achieve.

- Precise temperature control
  Microcomputer control system separate to set, control and display the R-temperature and F-temperature, more precise control.

- Automatic defrosting
  Special program to reduce the temperature fluctuation of the fridge, it' s for keeping food fresh.

- LED display and touch button
  Control board respectively display refrigerator and freezer chamber temperature setting and functional status; touch button operation is convenient.

- Tempered glass, safe and reliable
  Tempered glass, safe and reliable, easy clean and durable.

- Easy clean and removable door seal
  Door seal is easy clean and removable, and long service life.

- Automatic ice maker
  The refrigerator has the function of automatic ice making, and users can take ice cube, crushed ice and cold water outside the door.

- Door opening alarm system
  When the user opens the door for too long, the system will automatically alarm and remind the user to close the door.

Product Introduction

Product components

All figures in this manual are schematic; some features and devices may not be consistent fully with your refrigerator and the specific structure and configuration shall be subject to the actual product.

The appearance and specifications of the actual product may differ depending on the model.

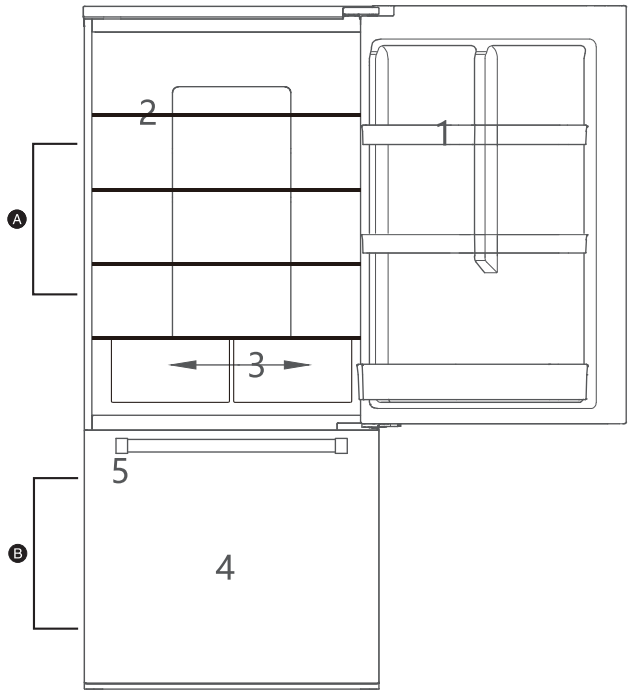

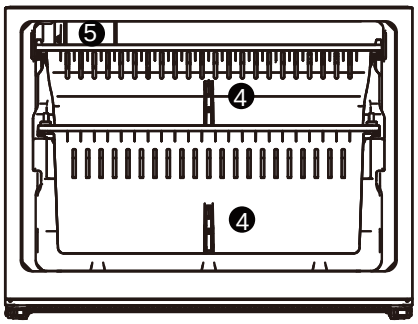

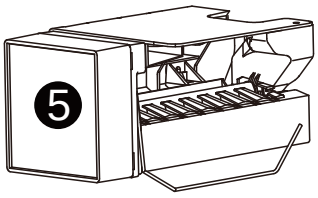

A Refrigerator compartment

1 Refrigerator door rack
2 Refrigerator glass shelves
3 Crisper

B Freezer compartment

4 Freezer drawer
5 Ice maker

Product Introduction

Installation dimension

Select a good location to place your appliance where it is flat and easy to use. Avoid placing the unit near heat sources, direct sunlight or moisture.

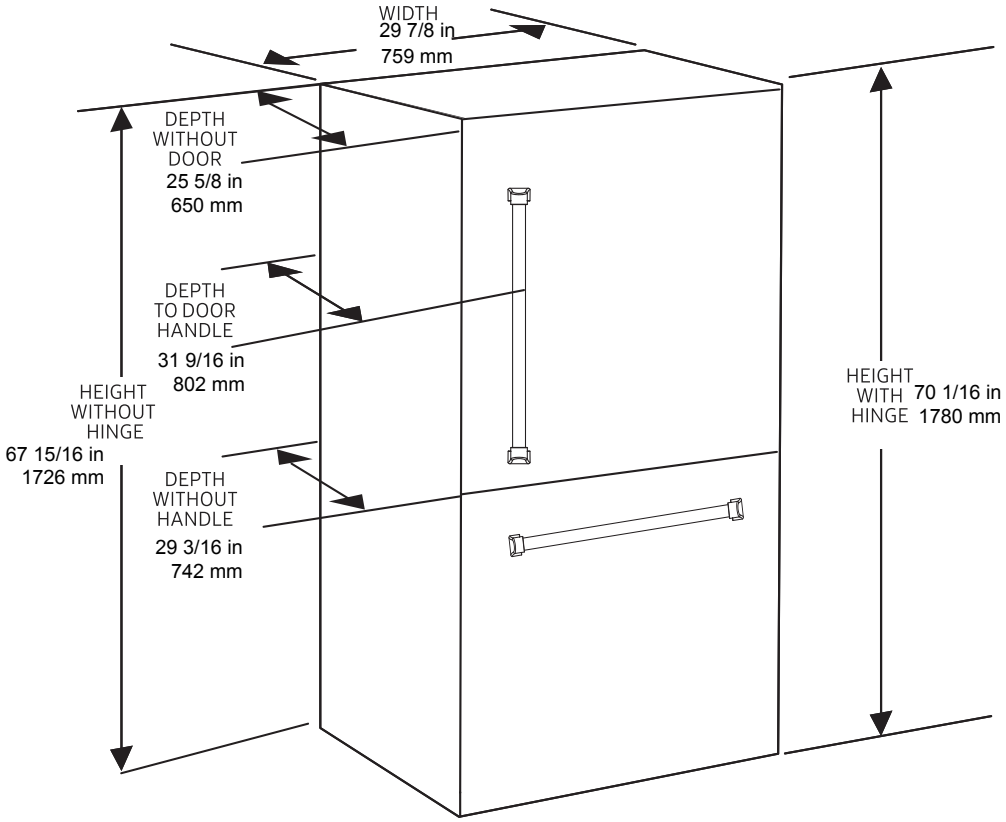

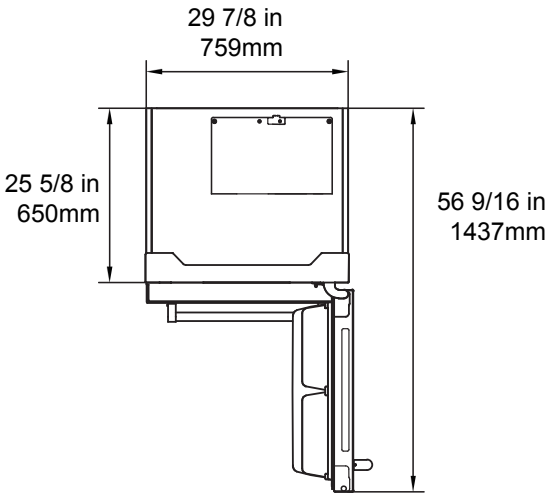

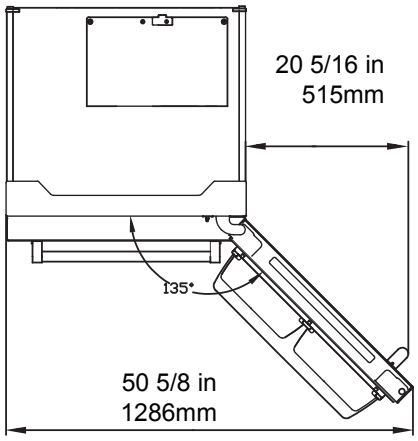

- The figure above is schematic for installation only, not representing the actual product. The specific dimension shall be subject to the product that you have bought.

- To ensure proper air circulation around the fridge, please maintain sufficient space. If install the top panel or closet, please maintain sufficient space to move when necessary.

Installation

Transport

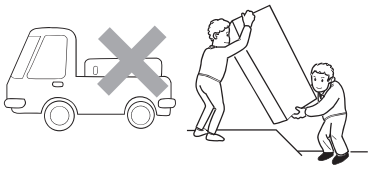

- Do not carry the refrigerator horizontally or reversely.
- Do not carry the refrigerator by holding the door or handle; the refrigerator shall be carried by lifting the bottom.

Where to install your unit

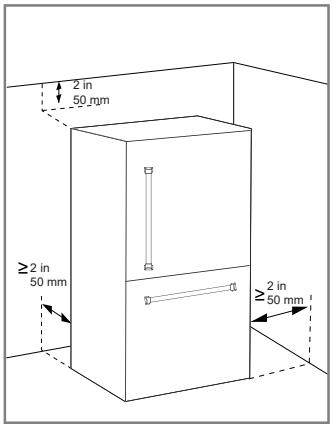

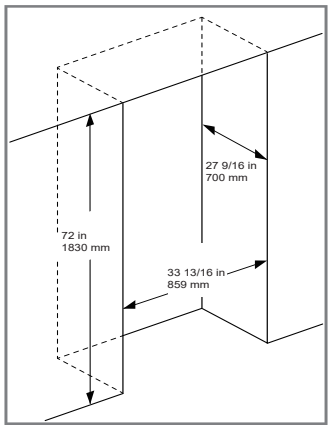

- Location Requirements
  Surface: Place the refrigerator on a hard, flat, level floor. If the floor requires leveling support, use stable, hard, non-flammable risers or blocks. Never use the foam packaging blocks from the shipping box as a base.
- Moisture Protection: Avoid installing the appliance in damp or humid areas where water may splash onto it. Promptly wipe away any water or dirt with a soft cloth to prevent rust and protect the electrical components.
- Ventilation & Heat: Place the refrigerator in a well-ventilated area away from direct sunlight and heat sources (such as ovens or radiators). Leave adequate clearance space around the sides and back. Do not cover or block the air grille on the rear compressor cover plate.

Leveling & Moving the Appliance

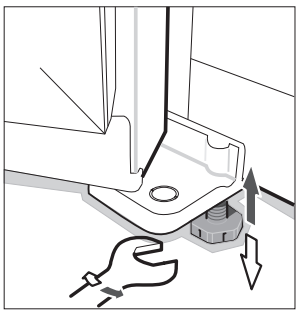

- Adjusting the Leveling Feet

  When shipped inside the packaging box, the refrigerator's adjustable front plastic feet are fully tightened. Once the appliance is unpacked and placed in its final location, follow these steps to level it:
  Adjust: Turn the two front plastic feet either by hand or using a wrench to adjust the height.
  Stabilize: Ensure that both front plastic feet and the rear rollers are firmly touching the ground. Proper contact prevents the refrigerator from moving, vibrating, or creating excess noise during operation.
- Moving the Refrigerator
  Before moving or relocating the appliance:
  Raise the Feet: Turn the front plastic feet counterclockwise until they lift completely off the ground.
  Move: With the weight resting entirely on the rear rollers, gently push the refrigerator to move it safely.

Operation

Before Using

- Remove all packages, including the foam backing at the bottom of refrigerator and the tapes fixing accessories in the box.
- Place the refrigerator to a proper position, and adjust the feet to level. It is better to clean the refrigerator before use.
- Remove the film: There is a layer of transparent film on the panel of our product, which can protect products from being scratched in the process of production and transportation, and you can choose to reserve or remove the film as needed.
- Place the refrigerator and adjust to level, clean it, let the refrigerator stand for above 2 ~ 6 hours, and then power on to ensure that the refrigerator can operate normally.

Water supply connection

- **WARNING: Connect to potable water supply only.**
- **The water supply system must be installed and connected by a professional technician.**

  Connect the refrigerator with the cold water pipe:
  Min. pressure: 140Kpa(1.4bar)
  Max. pressure:690Kpa(6.9bar)
- When using the function of ice maker, please make sure that the tap water pipe is connected normally and the water valve is opened. Enough space shall be reserved for the faucet connecting water source.
- After the refrigerator operates stably, the ice maker will make ice. Upon power-on for the first time, cold water is available after 5 hours since the refrigerator operates normally, and ice cubes or crushed ice is available after 12 hours.

Starting

- Connect the power cord, and turn on the power switch.
- Upon startup for the first time, the screen will display respective set temperature values (the temperature of refrigerating chamber is set as 41℉,temperature of freezing chamber 0℉)

Operation

Control panel

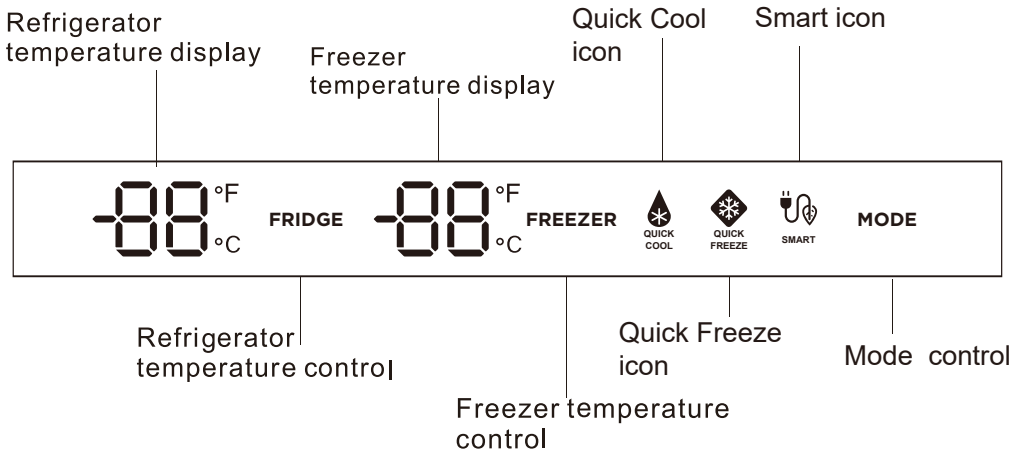

Temperature Control Settings
Switching Between Celsius (°C) and Fahrenheit (°F)
Default Setting: The display defaults to Fahrenheit (°F) when the appliance is powered on.

How to Switch: Press and hold the "MODE" button for 5 seconds to toggle the display between °C and °F.

(Note: If your control panel features other zone-specific buttons, you can hold those for 5 seconds to switch scales as well).

Temperature Ranges & Defaults
Celsius (°C) Mode
Refrigerator Compartment: Adjusts from 2°C to 8°C (Factory Default: 5°C)

Freezer Compartment: Adjusts from -15°C to -23°C (Factory Default: -18°C)

Fahrenheit (°F) Mode
Refrigerator Compartment: Adjusts from 35°F to 46°F (Factory Default: 41°F)

Freezer Compartment: Adjusts from -10°F to 5°F (Factory Default: 0°F)

How to Adjust the Temperature

Select a Zone: Press the button corresponding to the zone you want to adjust (e.g., "Fridge" or "Freezer").

Adjust: Continue pressing the button to cycle through the available temperature ranges shown above until your desired temperature is reached.

First-Time Startup Instructions

Initial Defaults: When plugged in for the first time, the appliance automatically starts at the factory default settings: 41°F (5°C) for the refrigerator and 0°F (-18°C) for the freezer.

Cool-Down Period: Before loading food, adjust the refrigerator temperature to 37°F (3°C) and let the appliance run empty for at least 4 hours. This ensures both compartments thoroughly chill and stabilize.

Final Adjustment: Once the 4-hour stabilization period is complete, you may adjust the temperature to your preferred daily setting and begin storing food

Operation

QUICK FREEZE MODE

Use this mode when adding a large amount of warm or room-temperature food to the freezer to lower the temperature rapidly.

How it Works: The unit will run in Quick Freeze mode for 24 hours or until the freezer temperature reaches -18°F (-28°C). It will then automatically return to your previous temperature setting.

To Enable: Press the Mode button until the Quick Freeze icon illuminates.

To Disable: Press the Mode button until the Quick Freeze icon turns off.

Note: Quick Freeze and Quick Cool modes can be activated and run at the same time.

QUICK COOL MODE

Use this mode when adding a large amount of warm or room-temperature food to the refrigerator to lower the temperature rapidly.

How it Works: This mode drops the refrigerator temperature to 35°F (2°C). The unit will run for 2 hours and 30 minutes before automatically returning to your previous temperature setting.

To Enable: Press the Mode button until the Quick Cool icon illuminates.

To Disable: Press the Mode button until the Quick Cool icon turns off.

Smart Mode (Vacation Mode)

Use this mode when leaving home for an extended period, when the refrigerator compartment is mostly empty but you still have food stored in the freezer.

How it Works: Smart Mode automatically sets the refrigerator section to an energy-efficient 41°F (5°C) and the freezer section to 0°F (-18°C). The unit will remain in this mode until you manually deactivate it.

To Enable: Press the Mode button until the Smart icon illuminates.

To Disable: Press the Mode button until the Smart icon turns off.

Operation

Power Delay Protection

If the unit is unplugged, loses power, or is turned off, you must wait 3 to 5 minutes before restarting it.

If you attempt to restart the refrigerator-freezer before this time delay has passed, the compressor will not start.

Ambient Temperature Restrictions

Recommended Range: We do not recommend installing the refrigerator in environments where the ambient temperature drops below 32°F (0°C) or rises above 110°F (43°C). Outside of this range, the compressor may fail to maintain proper cooling temperatures inside the appliance.

Cold Weather Operation: For installations where the surrounding temperature drops below 32°F (0°C), set the freezer temperature control to the "COLDEST" setting. This will improve the performance of the refrigerator under low-temperature conditions.

Operation

Refrigerator chamber

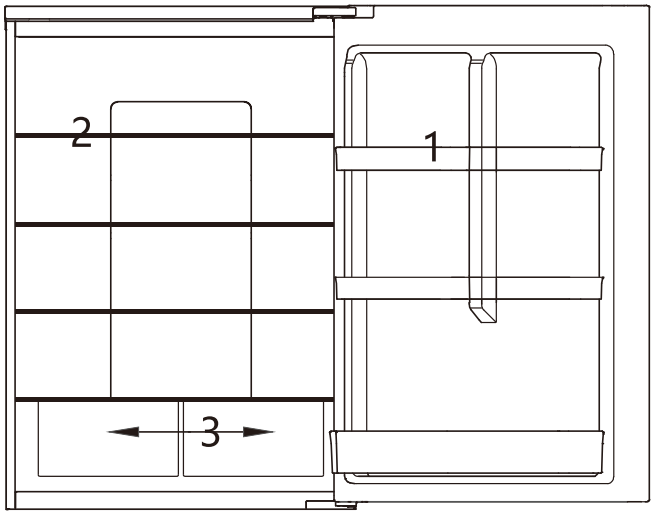

■ **Using the Refrigerator Compartment**

The refrigerator compartment is designed for short-term storage of fresh foods, including fruits, vegetables, drinks, and daily items. To maintain freshness and prevent odor transfer, it is highly recommended to seal food in containers or wraps before storing.

Storage Layout Guide

Refrigerator Section Recommended Items

Top Shelf : Dairy products, eggs, and foods with strong odors.

Glass Shelves : Cooked foods, meal prep, baked goods, milk, and leftovers.

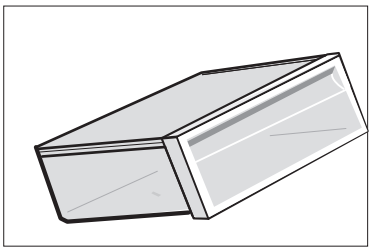

■ **Crisper Drawer (Fruit & Vegetable Box) :**

Fresh fruits and vegetables. This drawer regulates humidity to keep produce crisp and fresh.

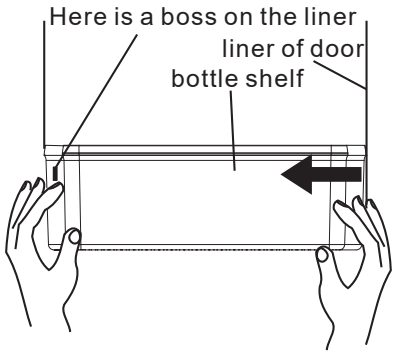

■ **How to Remove the Door Bottle Shelf**

Follow these steps to remove the door bottle shelf for cleaning:

Grip: Place both hands firmly on either side of the bottle shelf.

Push: Locate the side without the locking tab (boss). Push the shelf inward from that side, following the direction of the arrow.

Release: Push firmly until the buckle on the edge of the shelf disengages from the groove in the refrigerator liner.

Remove: Once disengaged, lift and pull the bottle shelf completely out of the refrigerator.

Operation

Freezing chamber

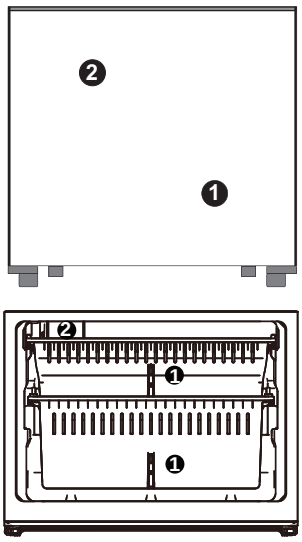

■ **The freezing chamber is used to freeze foods, store deeply frozen foods and make ice cubes.**
It can preserve foods for a long time.

The freezing chamber is suitable for retaining the freshness of foods for a long time. When storing meat, it is suggested to cut the meat into pieces which are easy to take out, and mark the freezing date to prevent foods from exceeding the time limit.

Suggested sections of freezing chamber for various foods and variety name:
① Drawer: packaged frozen foods, etc.;
② Ice maker.

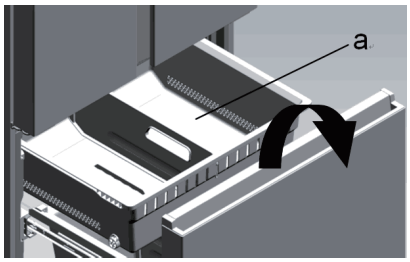

■ **Drawer of freezing chamber**

The upper drawer of freezing chamber can freeze and store large-volume foods, and the lower drawer is mainly used to store frozen foods.

CAUTION

The food especially the oily food which stored in refrigerator ,please avoid the direct contact with the liner.When the interior stained with oil or oily food soup stains, should be cleaned immediately to avoid the long contact with the liner which may lead to the liner corrosion and cracking.

Operation

Food Storage

Food Storage Guidelines

- Freezer Chamber (Freezer Compartment)
  Placement: Store frozen foods inside the main freezer compartment, not on the door's bottle rack.
- Airflow: Do not block the air outlets with food. Maintain proper spacing to ensure optimal air circulation.
- Sensors: Keep food clear of the temperature sensor to ensure accurate temperature regulation.
- Capacity: Avoid overloading the freezer. Do not exceed the appliance's maximum freezing capacity at one time.
- Thawing & Refreezing: Never refreeze completely thawed food unless it has been cooked first.
  Doing so compromise food quality and safety.

Food Packaging Tips

- Portioning: Divide food into smaller portions and package them separately. This helps food freeze completely and prevents items from sticking together.
- Labeling: Label packaging bags with the freezing date to track storage limits and ensure food freshness.
- Material Quality: Use odorless, airtight, and watertight packaging materials to prevent contamination and odor transfer.

Safety Warnings (Glass & Liquids)

- Explosion Hazard: Do not place glass bottles, jars, or canned liquids in the freezer or directly in front of the refrigerator's cold air outlets. Liquids expand when frozen and may cause the glass or metal to burst.

Energy Saving & Efficiency

- Hot Foods: Allow hot foods to cool to room temperature before placing them in the refrigerator or freezer. Storing hot food increases energy consumption.
- Door Usage: Open the doors only when necessary, and close them promptly to minimize cold air loss.
- Smart Thawing: Defrost frozen foods by placing them in the refrigerator compartment. This helps safely thaw the food while utilizing its coldness to reduce the refrigerator's energy use.
- Appliance Placement: Ensure the refrigerator is installed away from direct sunlight and heat sources (such as ovens or heaters).

Maintenance

Defrosting

This appliance is equipped with an automatic defrosting function. No manual operation is required.

Cleaning

Precautions for internal and external cleaning of refrigerator:

- To ensure food safety and extend the lifespan of your refrigerator, please follow these cleaning guidelines:
- Prior to Cleaning: Always turn off the appliance and disconnect the power plug from the wall socket before starting.
- Electrical Safety: Ensure that no water enters the control panel, switches, door LED lamps, or the top electronics box during cleaning. Do not spray or flush the refrigerator directly with water, as this may damage the electrical insulation.
- Exterior Cleaning: Remove dirt from the exterior surfaces using a soft cloth dampened with a mild detergent. Wipe down with clean water, then dry with a soft cloth or allow to dry naturally.
- Door Gaskets (Sealing Strips): Clean the door seals using only clean water. Wipe thoroughly with a dry cloth and allow to dry naturally.
- Interior Cleaning: Use a soft cloth dampened with warm water or a neutral detergent to clean the interior walls and shelves.
- Prohibited Cleaners: Do not use metal scouring pads, wire brushes, coarse abrasive cleaners, strong alkaline detergents, or flammable/toxic cleaning fluids, as these will damage the appliance surfaces.
- Post-Cleaning: After cleaning is complete, securely reconnect the power plug to resume operation.

Special Operation Modes

- **Vacations**

  Short Vacations : If you are away for a short period , it is recommended to leave the refrigerator running and only leave food items with a short shelf life inside .

  Long-Term Shutdown : If you wish to turn off the refrigerator for an extended period , remove all food ,disconnect the power plug , and clean the interior thoroughly . Leave the doors slightly open to prevent the formation of mold and unpleasant odors .

- **Power Failures**

  Short-Term Outages : Brief power failures will not drastically affect the internal temperature .

  Extended Outages : If the power failure lasts for a prolonged period , minimize how often you open the doors . Do not place new , warm food items into the refrigerator , as this will accelerate the temperature rise .

  Pre-emptive Action : If a power outage is scheduled or announced in advance , activate the "Super Freezer" function ahead of time to lower the internal temperature to its lowest level , keeping your food frozen longer .

- **Discontinuing Use (Shutdown)**

  Generally , it is not recommended to frequently turn off the refrigerator or unplug the power switch . Constantly shutting down the appliance may shorten its operational lifespan .

Maintenance

Normal Operating Conditions:

Before calling for service, please review the common issues and normal operating behaviors listed below:

Hot Middle Beams & Side Panels: The middle divider beams and exterior side walls will feel hot to the touch after the appliance runs for a period of time. This is a normal part of the heat dissipation process.

Dew Drops & Condensation:

Internal: Condensation can form on internal surfaces when warm ambient air enters while the door is open.

External: In high-humidity environments or during rainy seasons, moisture may form on the exterior of the fridge. This is a natural environmental reaction; simply wipe it away with a clean, dry cloth.

Operating Noise:

First Use: The refrigerator will run at high speed to cool down quickly, which makes a louder sound.
The noise will subside once the internal temperature stabilizes.

System Sounds: Clicking, snapping, or gurgling sounds are normal. They are caused by the compressor starting or stopping, internal parts expanding and contracting, or the refrigerant flowing through the system.

Hot Compressor: During normal operation, the surface temperature of the compressor can exceed 80°C. Do not touch the compressor, as it can cause severe burns.

Prolonged Compressor Running Time: The compressor will run continuously for extended periods if the room temperature is very high, or if a large volume of fresh food has just been loaded. It will return to normal cycles once the target temperature is reached.

Maintenance

Trouble shooting

Before calling for service, review this list. It may save you both time and expense. This list includes common occurrences that are not the result of defective workmanship or materials in this appliance.

Fault	Possible cause	Remedial action
No display on the display panel	The mains plug of the appliance is not in the socket properly.	Check whether the power is on.
The compressor do not work	It's under defrosting mode. Power is not connected well.	It's normal for defrosting; Check whether the power is connected well.
Compressor runs too long	The fridge has recently been dis-connected for a period of time; Put too much fresh or hot food; Doors are opened too frequently or too long.	It takes some hours for the fridge to cool down completely; Hot food will cause the fridge to run longer until the desired temperature is reached; Warm air entering the fridge cause it to run longer. Open the door less often.
Vibrating noise	Floor is uneven or weak; Items placed on the top of the fridge are vibrating; Fridge is touching wall or cabinets.	Be sure floor is level and solid and can adequately support fridge; Remove items; Move fridge so that does not touch the wall or cabinets;
Alarm sound	Door is slightly open or not close more than 1 minute.	Close the door completely.

Warranty And Service

Warranty and Service

This product has been manufactured by Thor International, 10830 Ada Ave，Montclair, CA 91763 United States.

For Customer Service, please call (877) 288-8099

For the most up to date warranty and service policy, please refer to our website WWW.THORKITCHEN.COM/WARRANTY-REGISTRATION

For in-warranty service requests, please visit our website at WWW.THORKITCHEN.COM/SERVICE

Please Note: You must provide proof of purchase or installation date for any in-warranty service request

We Stand Behind the Quality of Our Appliances.

Reliability and customer satisfaction are our top priorities. We offer a solid two-year warranty on both parts and labor. Enjoy professional-grade performance with the confidence that we've got you covered.

Warranty Registration Made Easy.

01 Scan the QR Code or visit thorkitchen.com/register-your-product.

02 Input your purchase and product information and select register.

03 That's it. You're all set. Enjoy!

WARRANTY

PARTS

Questions: service@thorinternational.com