KOLPAK®

Protecting Your Future

Walk-In

Original Instructions
Installation, Operation and Maintenance Manual

This manual is updated as new information and models are released. Visit our website for the latest manual.



WELBILT®

Part Number: 500000400-11 9/19

Safety Notices

⚠ DANGER

Indicates a hazardous situation that, if not avoided, will result in death or serious injury. This applies to the most extreme situations.

⚠ Warning

Indicates a hazardous situation that, if not avoided, could result in death or serious injury.

Notice

Indicates information considered important, but not hazard-related (e.g. messages relating to property damage).

⚠ Caution

Indicates a situation that, if not avoided, could damage the refrigeration system or result in minor injury.

NOTE: Indicates useful, extra information about the procedure you are performing.

⚠ Warning

Read this manual thoroughly before operating, installing or performing maintenance on the equipment. Failure to follow instructions in this manual can cause property damage, injury or death.

⚠ Caution

Installation and maintenance/servicing are to be performed only by trained and qualified personnel familiar with commercial refrigeration systems.

⚠ Caution

Ensure that all field wiring conforms to the equipment requirements and all applicable local and national codes.

⚠ Caution

Disconnect all power sources before servicing the refrigeration equipment.

⚠ Caution

Sheet metal and coil surfaces have sharp edges. Use appropriate protective gloves to prevent injury.

⚠ Caution

Use appropriate eye protection during installation and servicing.

Table of Contents

Section 1
General Information

Receiving Inspection 4
Warranty Information 4
Panel Count And Hardware 5
Panel Storage 5
Panel Identification 6
Site Preparation 7
Cam Action Panel Fasteners 8

Section 2
Installation

General Installation Guidelines 9
Screed Identification 10
Screed Installation 11
Floor Panel Installation 13
Floor Overlay Installation 14
Concrete And Tile Flooring 15
Wall Panels And Door Section Installation 15
Ceiling Panel Installation 16
Split-Over Partition Wall Ceiling Installation 18
Ceiling Support 19
Interior Ramp Installation 20
Exterior Ramp Installation 20
Plug Button Installation 21
Penetrations 21
Trim And Wainscoting Installation 21
Threshold Installation 22
Door Sweep Adjustments 23
Adjustable Hinges 24
Thermometer Testing 25
Thermometer Recalibration 25
Electrical Connections 26
Tapered Roof System 27
Membrane Roof System 28

Section 3
Maintenance

Maintenance And Housekeeping Recommendations 31

System Start-Up Checklist 32

Section 1
General Information

Receiving Inspection

- Check the shipment carefully and compare to the bill of lading.
- Account for all items listed and inspect each container for damage.
- Carefully inspect for any concealed damage.
- Report any shortages or damages to the carrier, note on the bill of lading, and file a freight claim.
- Damaged material cannot be returned to the manufacturer without prior approval.
- A Return Material Authorization (RMA) must be obtained. Contact a sales representative at 800-826- 7036.

Warranty Information

For information regarding warranty guidelines, claim form, product registration, warranty verification, or locating a service provider please visit our website at www.kolpak.com or call 800-225-9916.

Panel Count And Hardware

- Read this manual carefully before beginning the installation and operation of the unit. Scan the QR Code below to view the Basic Walk-In Installation Service Video.

- Using the packing list and skid documentation, count the wall panels, corners, ceilings, doors, and floors where applicable. Locate and verify the accessory and hardware package(s).

⚠ WARNING

Do not attempt to lift the panels or accessories by yourself. Always have adequate lifting equipment or manpower available to accomplish the task safely.

Do not unwrap the skids and leave the panels in a position that they could fall over or blow over and cause an injury. Be sure that panels are adequately restrained at all times.

⚠ CAUTION

Acids and oils on hands and fingers could discolor wall panel finish. Make sure to wear appropriate gloves that are free from residue while handling wall and ceiling panels.

⚠ CAUTION

Make sure to store the panels as noted below if necessary to ensure that they are not damaged prior to being installed.

Panel Storage

- If the walk-in panels must be stored on a job site before installation, store them inside if possible.
- The PVC protective panel covering should only be removed after final assembly of the walk-in. Gloves should be worn to prevent acids and oils on hands/fingers from creating smudges on panel surface.
- The panels may be stored on skids as received, provided the skids are on level surface and kept free of moisture.

- If the panels must be stored outside, store them on edge with the grooved side (female rail) facing down. Kiln-dried wood spacers provide a ventilation gap to prevent moisture stains from forming on the panels' metal skins. Cover the panels with black plastic to keep out sunlight and moisture. Be sure the plastic does not touch the ground, allowing air circulation.

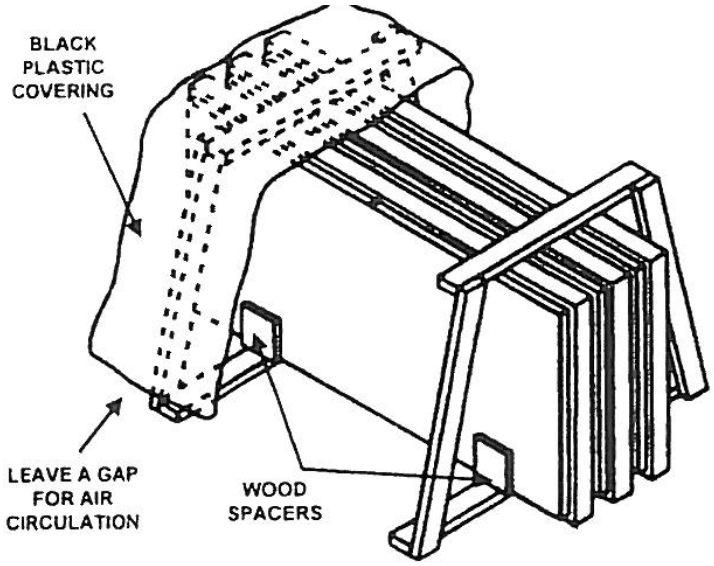

Panel identification

- Each panel is labeled to aid in identification and proper placement. Panel item numbers are referenced on the product assembly drawing showing proper location for intended installation within the unit.

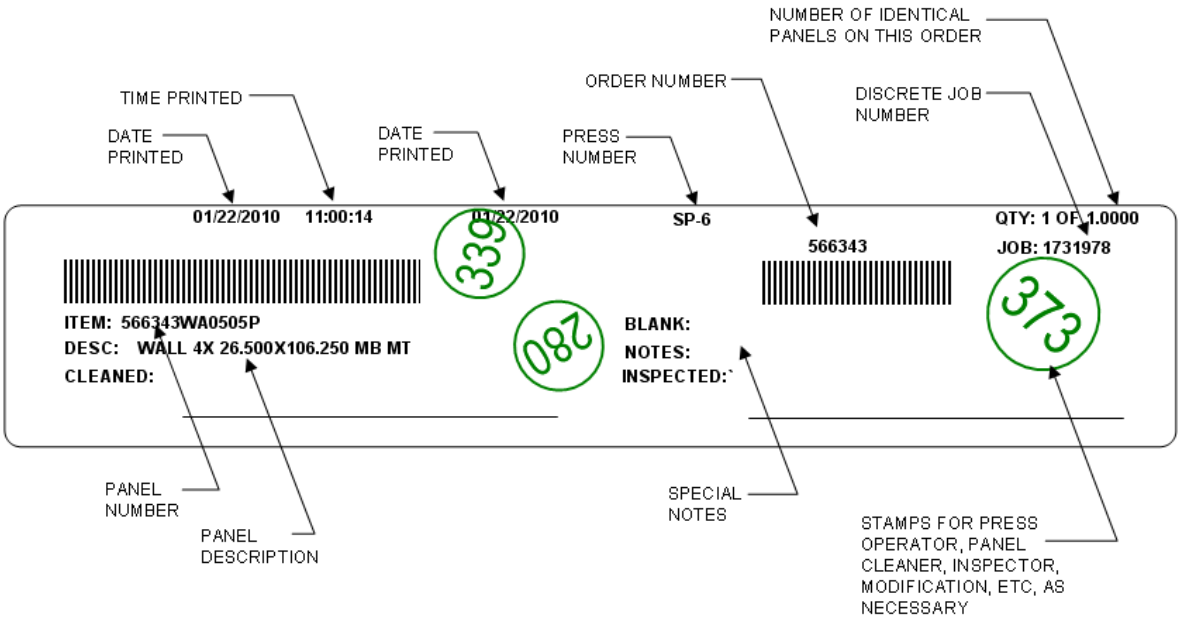

Site Preparation

⚠CAUTION

Ensure that the area for installation is level and clear of all debris before beginning assembly. If care is not taken to assure a level base, wall and ceiling panels will not align properly, causing problems in installation and operation of door panels, and potential performance issues due to escessive air leaks. The two recommended techniques to level the floor area are self-leveling epoxy and/or asphalt shingles.

For concrete slabs, above grade is recommended. A slab below grade is not permitted.

A 2" minimum clearance is required between the unit and any adjacent structures to allow for wall surface irregularities and for air circulation. Air circulation around the walk-in of 5 CFM per 100 Sq. Ft. of wall area is recommended. Failure to allow for this clearance and air flow may result in performance issues such as excesive moisture and/or condensation in the unit or adjoining areas.

- Using the supplied assembly drawing (in hardware box), mark the perimeter of screed, wall, or floor sections on the existing building floor using a chalk line.
- Perimeter lines must be square and parallel. Use the 3, 4, 5 rule of squaring.

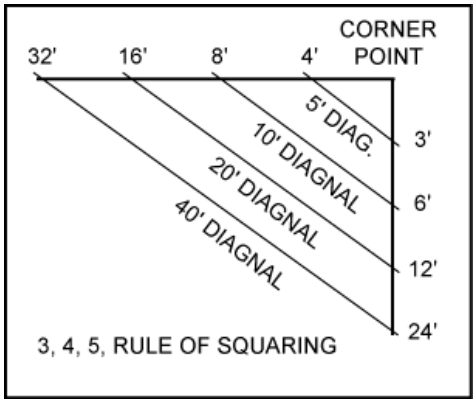

- After the first two lines, measure and establish the rest of the perimeter.

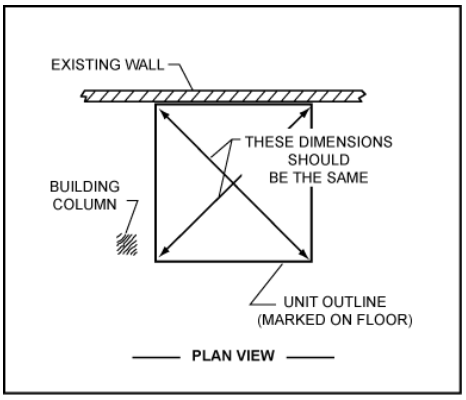

- If the installation area is not level, find the high point of this perimeter line. The floor, floor screed and wall must be leveled to this point.

- Use a 4’ level to determine floor levelness. Be sure to check both directions for floor levelness.





Cam Action Panel Fasteners

- Before starting to assemble the unit, be sure to familiarize yourself with the operation of the panel fasteners.

- To operate the cam locks, insert a 5/16” hex wrench (packed in hardware box) through the access hole in the panel interior skin, and into the hex opening in the fastener. Turn the wrench clockwise approximately 3/4 of a turn to put the cam hook into the locked position.

- If a problem should occur, such as having to unlock a panel that was not properly positioned, you must turn the handle counterclockwise until it stops, in order to reset the cam position.

- Scan the QR Code below to view Operating The Cam Lock Service Video.

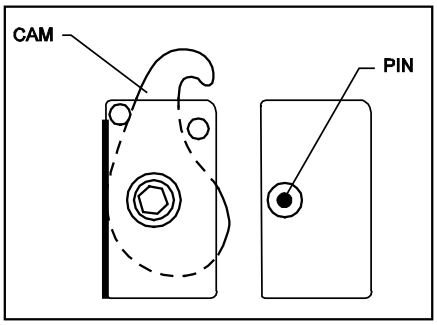

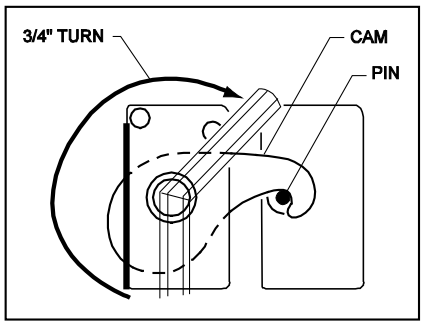

⚠CAUTION

Using a hammer to drive the hex wrench into the panel fastener can result in damaging the interface surface, rendering the lock unusable. Clear the hole of any debris if the wrench cannot be fully inserted with normal hand pressure.

Section 2
Installation

General Installation Guidelines

- All insulated panels have a tongue and a groove perimeter edge. This interlocking design and the panel edge gaskets will result in an air-tight walk-in when installed square and level. Refer to the assembly drawing for the general layout and specific panel placement and markings.

- The tongue side of the panel and cam lock holes is on the left of each seam when viewed from the interior of the walk-in (standing on the inside and looking out). The exact location of the tongue (M) and groove (F) for ceiling and floor panels, if required, will be shown on the assembly drawing.

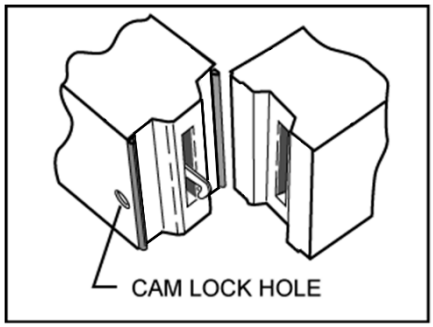

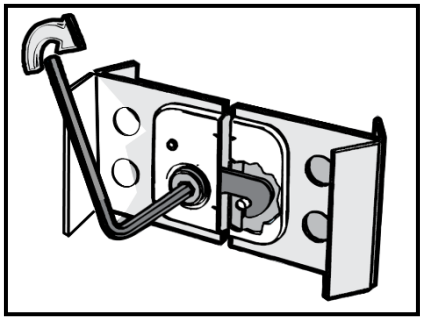

Screed Identification

- There are many styles of screeds used in floorless walk-in coolers and freezers. The types of screeds furnished with your unit will be identified on the unit assembly drawing.

- Breaker strips (thermal breaks) are used to prevent heat transfer between the cooled side and the ambient side of a concrete floor. Without these thermal barriers, heat transfer through the concrete layer is relatively rapid, causing a greater likelihood of condensation and icing outside of the unit, as well as increased energy consumption and cooling load on the refrigeration system.

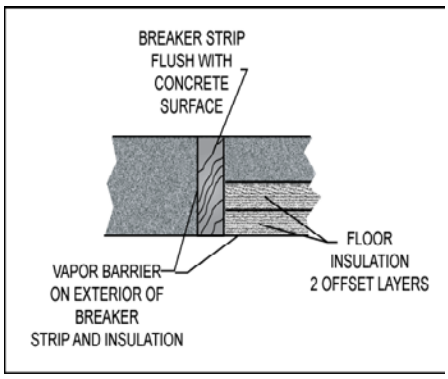



⚠CAUTION

When having a product installed with a thermal break, make sure that the contractor leaves the top of the thermal break exposed for later inspection, not covered by concrete. If there are performance issues after installation, it may be necessary to inspect the position and condition of the thermal break.

- Standard screeds are available in both vinyl (with integral floor coves) and metal versions. Vinyl screeds cannot be used in outdoor applications due to potential issues with UV degradation caused by sunlight. Most thermal breaks are installed to be level with the concrete surface. Heights for vinyl screeds are 1.5” or 4”, while metal screeds are available in various heights as necessary for the application. Standard screeds are pre-cut with intended installation locations shown on the assembly drawing.

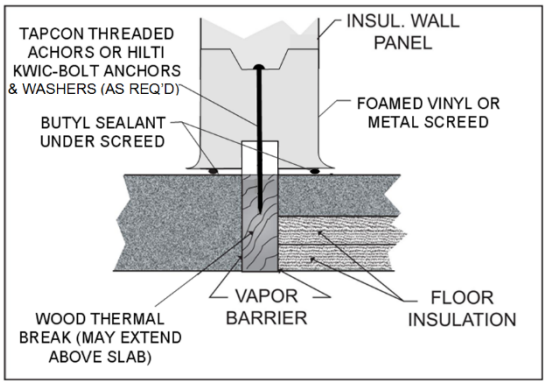

- U-shaped screeds are available for customers who desire to use a vinyl screed, but need either a lower profile or need a special height finished unit, and would prefer to use a standard sized wall panels. U-shaped screeds are factory cut to length and mitered on the corners, with intended installation locations shown on the assembly drawing.

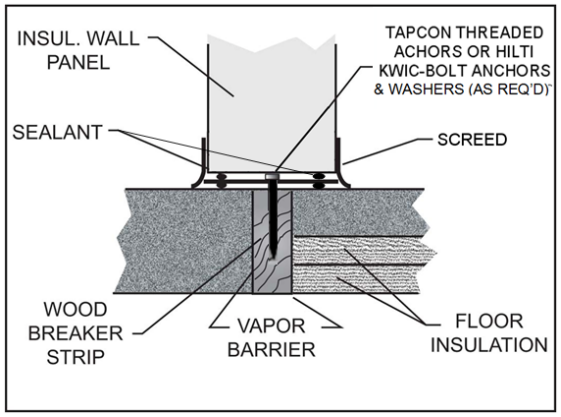

- Flat-bottom walls are available for configurations that require a metal screed, do not have an integral cove, and will be anchored by an exterior (or interior) mounting angle. Mounting angles are supplied in 10' lengths and field cut to fit the dimensions of the enclosure as necessary.

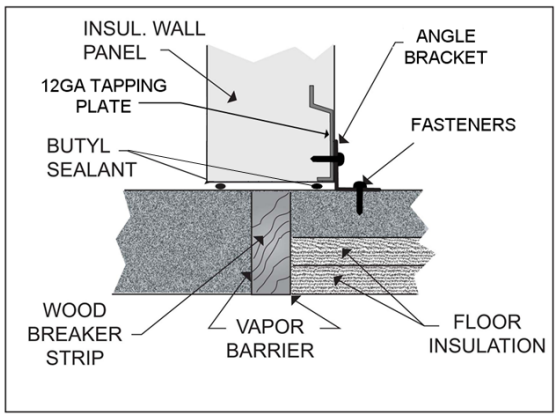

Screed Installation

- Place the screeds on the floor using the chalk lines as guides. Where factory cut screed is used, screed sizes and layout are identified in the assembly drawings.

- A thermal break (breaker strip) is required to separate all freezer interior concrete from the exterior concrete. The interior freezer concrete floor must be insulated and completely isolated. The screed/wall is to be centered over the thermal break.

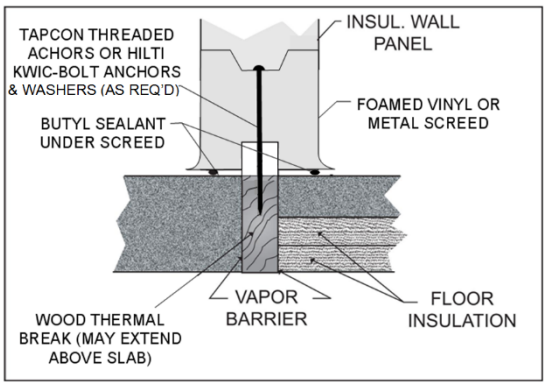

- Apply two beads of non-drying butyl sealant to the bottom side of the screeds.

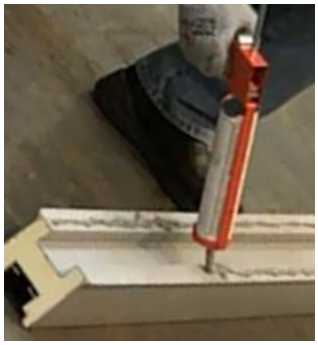

- Start at back corner and fasten screeds in place for two adjoining walls. Fasten screed as shown on assembly drawing with fasteners provided.

- Each section of screed is to have a minimum of two fasteners, one on each end. This is especially true for screed sections under the door. For long screed sections, fasteners should be spaced at a maximum of four feet.

- To insure proper fit, do not fasten screeds for remaining walls until the first two walls are assembled.

⚠ CAUTION

Thermal breaks are required in freezer applications and recommended in cooler applications to separate the interior flooring from the exterior floor. Thermal breaks prevent heat transfer and increase energy efficiency.

A 3/8” bead of non-drying butyl sealant is required and should be continuous around the complete perimeter of the walk-in. This sealant application will assist in maintaining the vapor barrier.

Floor Panel Installation

- Review the floor panel layout on the assembly drawing.

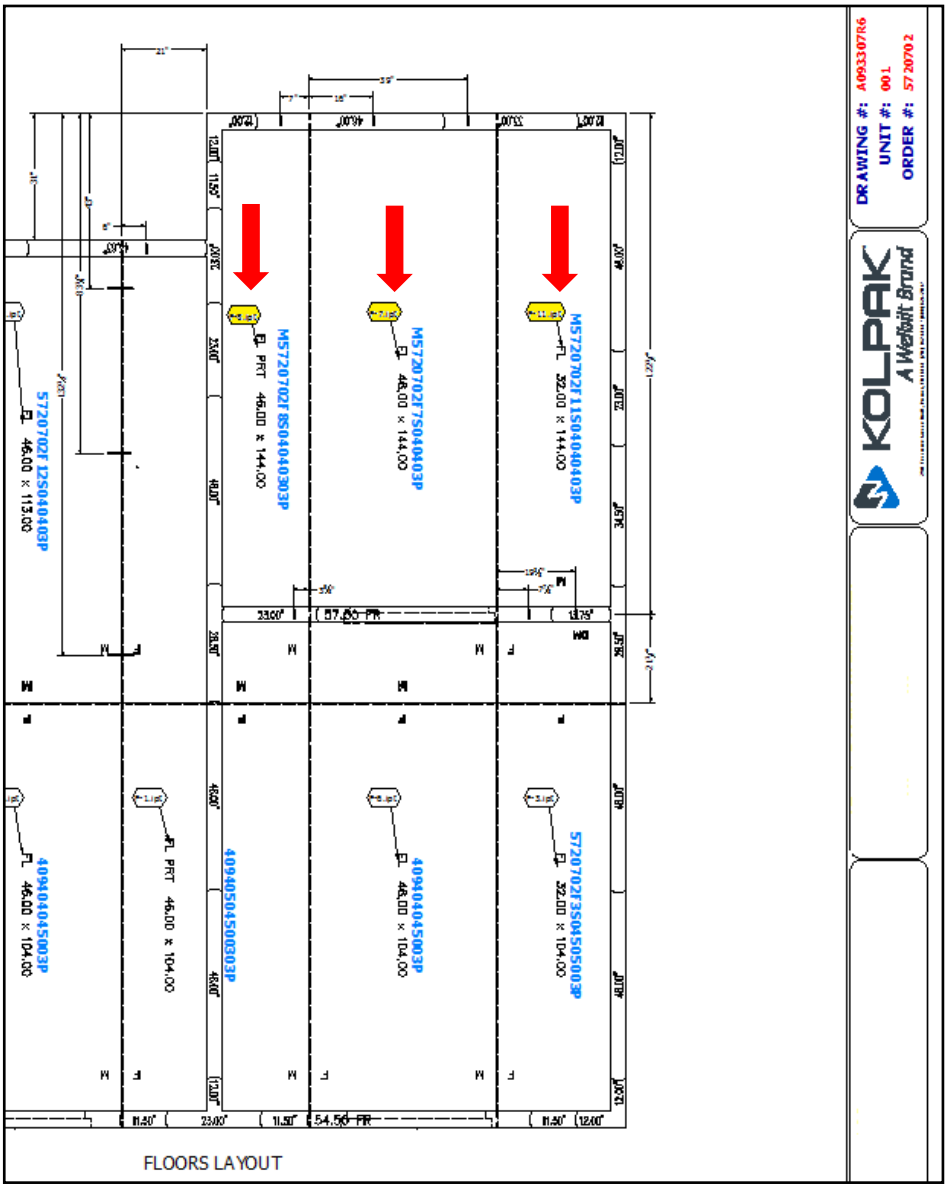

- Panels are labeled with numbers corresponding to those on the assembly drawing**.**

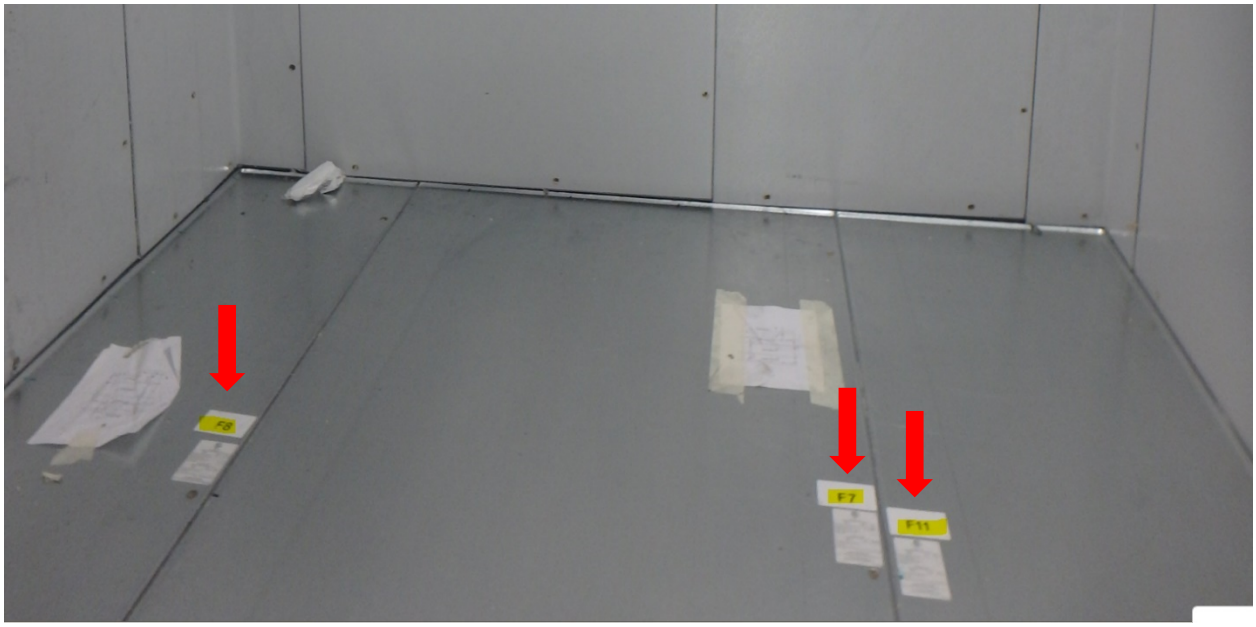

⚠CAUTION

Standard Era Floors are designed for foot traffic and rolling cart traffic, up to 1,000 lbs. per square foot uniform load. Structural Era Floors are designed for keg coolers and other heavy rolling cart loads up to 5,000 lbs. per square foot uniform load. If forklift trucks are used, special construction techniques must be followed for concrete wear surfaces over the panels. Consult customer service for recommendations.

- Mark and level the floor according to site preparation requirements.
- Lay out floor panels in correct sequence according to assembly drawings, making sure the flooring is level.
- Lock floor panels together, making sure edges are flush and square.

Floor Overlay Installation

⚠CAUTION

Installation of overlay material is best accomplished before the refrigeration system has been started, and before any product has been loaded. In the event that overlay must be added at a later date, ensure that the refrigeration system has been turned off and that the subsurface has been allowed to return to a normal working temperature. Installing at a low temperature may not allow the adhesive/sealant to cure adequately.

- Clean and dry subsurface.
- Apply silicone to the underside of flooring overlay material.
- Begin laying first row of flooring overlay ½" away from the edge of the floor according to the drawing and secure to the subsurface with sheet metals screws or anchors.
- All sheets must be as flush as possible to one another.
- All sheets must be secured using a sheet metal screws or anchors every 24". Ensure that at least one fastener is used near each corner of the overlay material.
- Continue to follow the layout according to the drawing until all sheets are flush and secured to the subsurface.
- Caulk all seams and edges of flooring overlay material.
- Allow 1-3 hours for the adhesive/sealant to dry prior to resuming use of the walk-in.

Concrete And Tile Flooring

⚠CAUTION

Gasses emitted by curing concrete floors or tile grout will damage panel finishes. Adequate ventilation must be provided when the concrete floor or tile setting bed and grout is curing. Leave all doors open for ventilation. If concrete or tile is to be installed after walk-in is erected, protect the wall finish by applying a protective covering.

Wall Panels And Door Section Installation

- Review the wall panel and door sections layout on the assembly drawing. Panels are labeled with numbers corresponding to those on the assembly drawing**.**

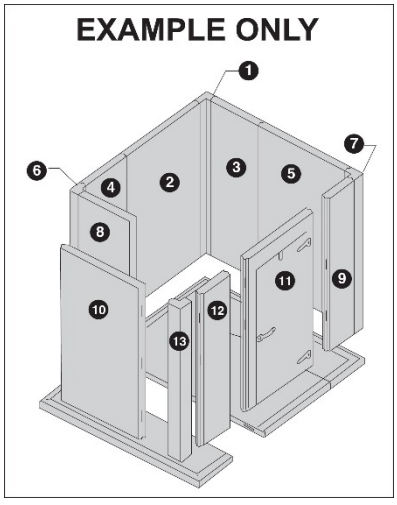

- Start with a back corner and work around the unit both ways, ending with a front corner. **Do not lock the walls into the floor/screed at this time.**

- Begin wall panel assembly by cam-locking a back corner panel and one wall panel together. See assembly drawing for correct panel placement, and tongue and groove directions.

- Door sections will be installed in sequence along with wall panels. Use a level to set the door section plumb and level.

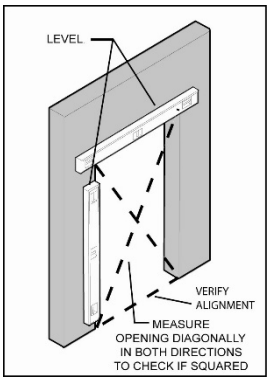

- Work around unit in both directions, ending at opposite corner.

- Ensure the edges and tops of walls are flush.

- Lock the wall panels and door section into the floor/screed.

Ceiling Panel Installation

⚠ CAUTION

Hat Channel and C-Stud ceiling panels could potentially interfere with evaporator coil mounting holes. Hat Channels and C-Studs are located every 11.5” from the male/female rail. Make sure to offset evaporator coil mounting holes so that they do not interfere with any Hat Channel or C-Stud.

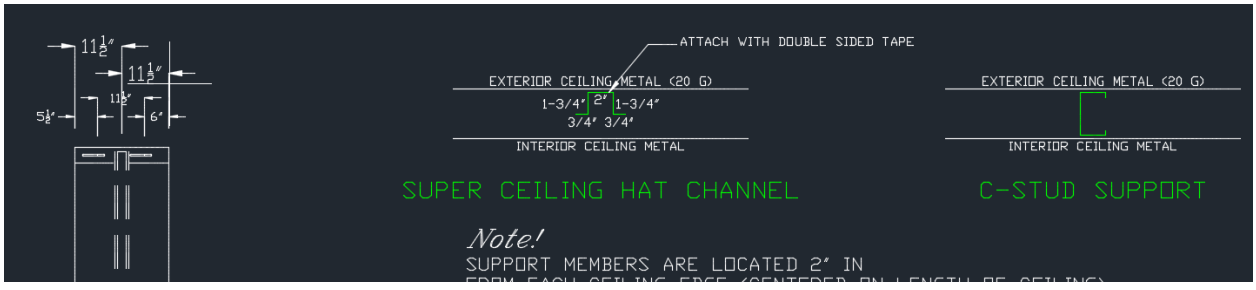

- Review the ceiling panel layout on the assembly drawing. Panels are labeled with numbers corresponding to those on the assembly drawing**.**

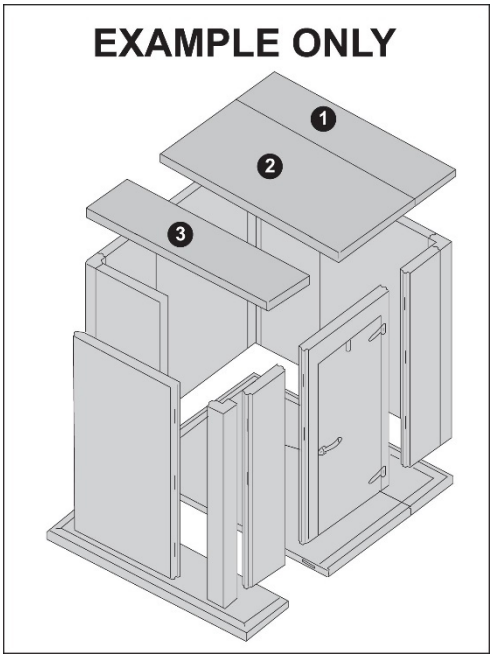

- Use assembly drawings for correct panel placement and sequence.
- Begin with an end section for a single compartment enclosure, or a tee panel for a multi-compartment enclosure

Place ceiling panels in position, per the assembly drawings, on top of wall panels. **Do not lock ceiling panels to the wall at this time.**

Check panel alignment.

Cam-lock ceiling panels together.

After several ceiling panels are in position and locked together, check all wall to ceiling joints for flush fit and proper alignment.

Lock ceiling panels to wall panels.

⚠ WARNING

The top panels on walk-in units are designed, at a minimum, for an allowable live load of ten pounds per square foot as noted on submittal drawings and installation instructions. Top panels are not designed as work platforms or for dry storage and should not be used as such. Use in such a manner could damage the structural integrity of the top panels and will void the manufacturer's warranty. Do not place condensing units on top of ceiling panels.

Split-Over Partition Wall Ceiling Installation

- **Indoor applications:** Apply a continuous 3/8” bead of non-drying (butyl) sealant to the both sides of the wall to ceiling joint. Lock ceiling panels together and align over partition wall. Once all ceiling panels are assembled and aligned, lock the wall to the ceiling.

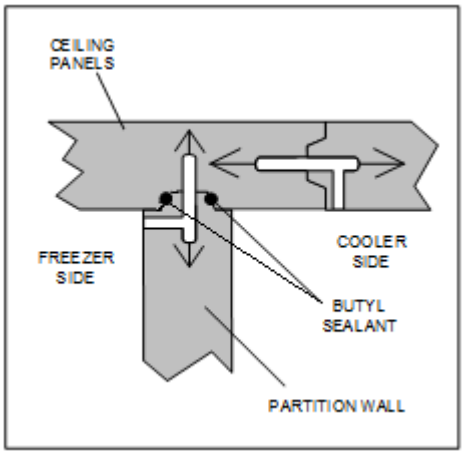

- **Outdoor applications:** Apply butyl tape to the partition wall anchor plate. Lock ceiling panels together and align over partition wall. Once all ceilings are assembled and aligned, attach lag bolts through the ceiling cam lock hole into the anchor plate.

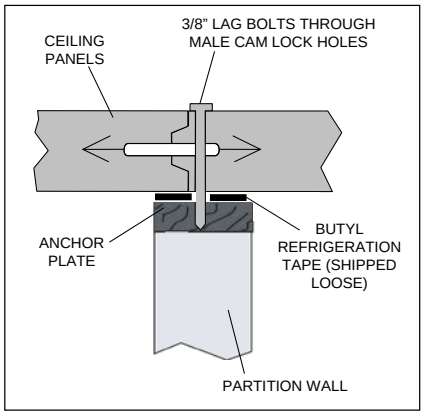

⚠CAUTION

Apply a continuous 3/8” bead of non-drying (butyl) sealant at all partition wall/ceiling joints. Apply the sealant on both sides of the panel. This sealant application will assist in maintaining the vapor barrier.

Ceiling Support

- Indoor enclosures with dimensions of more than 14’-8” in both length and width must have some type of support for the ceiling panels. Suspended ceiling hangers, foamed in super ceiling channel, exterior self-support steel beams, or interior steel beams with column supports must be used. Reference details provided on the as built drawing and the diagram below for suspended ceiling support installation instructions.

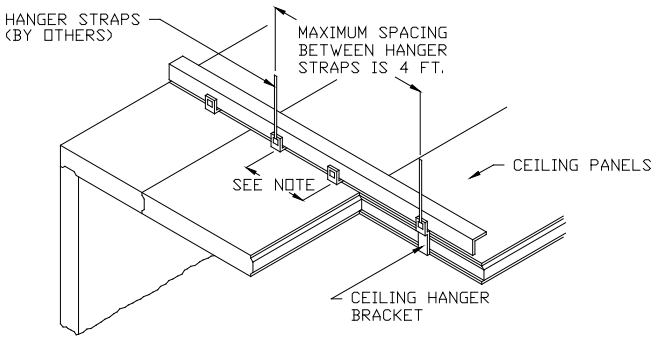

ASSEMBLY VIEW OF SUPPORTING SYSTEM

NOTE: HANGER BRACKETS ARE SPACED EVERY 23″ (NOMINAL) AND EVERY 24″ (FULL) EXCEPT WHEN A 3′ CEILING IS INVOLVED. BRACKETS WILL BE SPACED AT 30″ (MAX.) OVER 3′ PANELS.

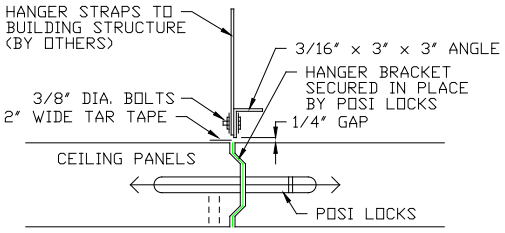

SECTION VIEW OF
HANGER BRACKET ASSEMBLY

SUSPENDED CEILING DETAIL

⚠ WARNING

These systems must be installed properly in order to provide the necessary support for the ceiling panels, allowing them to maintain their design load rating. Failure to do so may result in an unsatisfactory installation, or an unsafe condition.

Interior Ramp Installation

- Review the floor panel layout on the assembly drawing. Panels are labeled with numbers corresponding to those on the assembly drawing**.**

- Apply sealant at ramp cavity to concrete and floor intersections. Install ramp and drive fasteners in place. Apply sealant to all ramp edges.

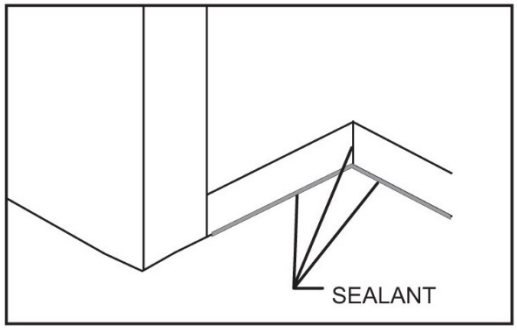

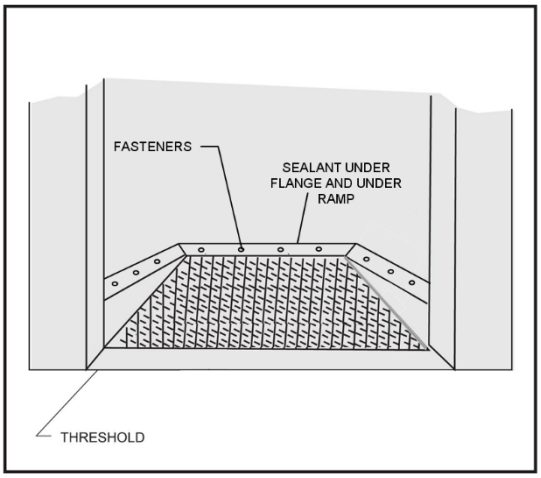

Exterior Ramp Installation

- Install the exterior ramp and fasteners per the details provided on the assembly drawing.

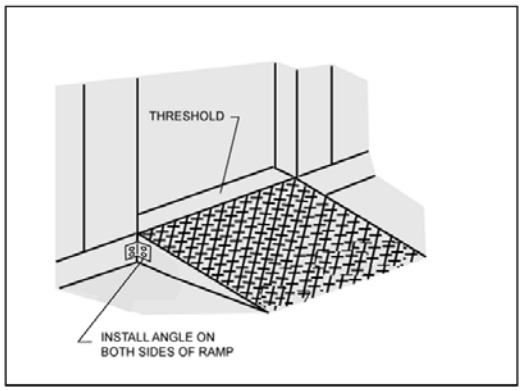

Plug Button Installation

- Remove protective covering from panels, if applied.
- Check that all cam locks are engaged.
- Insert plug buttons into the cam lock wrench access holes and firmly tap in place using a rubber mallet.
- Plug buttons supplied for walls and ceilings are vinyl, plug buttons supplied for floors are either stainless steel or high-strength plastic

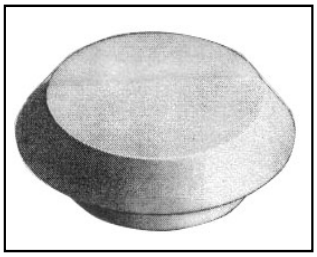

Penetrations

- Some areas of walk-in panels contain working parts and should not be penetrated. Do not make a penetration within 2” of cam lock holes or panel seams.
- Penetrations must be completely sealed (insulation, foam, etc.) to prevent heat transfer and condensation/ice formation. Electrical penetrations must be sealed both internally and externally to form an acceptable seal.
- Penetrations in outdoor ceilings is not permitted.

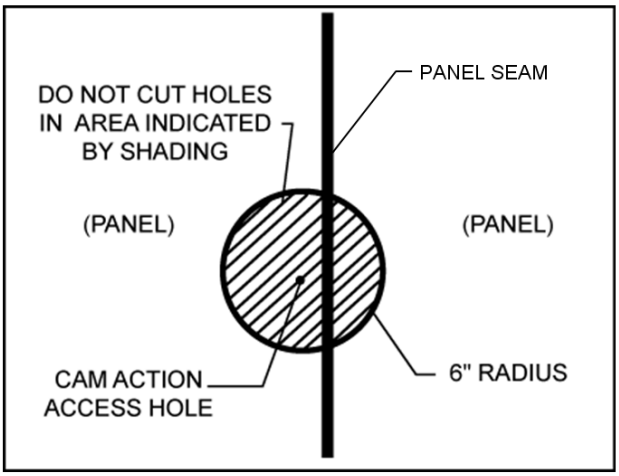

Trim and Wainscoting Installation

- Install any trim provided per the assembly drawing. Reference the assembly drawing for trim type and location.
- All wainscoting material will be cut to size and shown on the assembly drawing. Wainscoting material is numbered for easy identification.

⚠CAUTION

Installation of wainscoting material is best accomplished before the refrigeration system has been started, and before any product has been loaded. In the event that wainscoting must be added at a later date, ensure that the refrigeration system has been turned off and that the subsurface has been allowed to return to a normal working temperature. Installing at a low temperature may not allow the adhesive/sealant to cure adequately.

- Clean and dry subsurface.
- Follow the sequence of labels on the sheets of material in accordance to the labeling on the assembly drawing.
- Attach corner pieces (if applicable) first, by applying silicone adhesive to the back side, and then securing to the panel walls using sheet metal screws every 24".
- The remaining sheets can then be secured using sheet metal screws every 24". Ensure that at least one fastener is used near each corner of each piece of material.
- All sheets must be as flush as possible to one another.
- Make sure that all sheets make contact with outside finished floor.
- Caulk all exposed edges of sheeting.
- Allow 1-3 hours for the adhesive/sealant to dry prior to resuming use of the walk-in.

Threshold Installation

- Install the threshold per the details provided on the assembly drawing. Threshold types include fiberglass and stainless steel and are provided with either flat or sloped transitions depending on the required floor application.

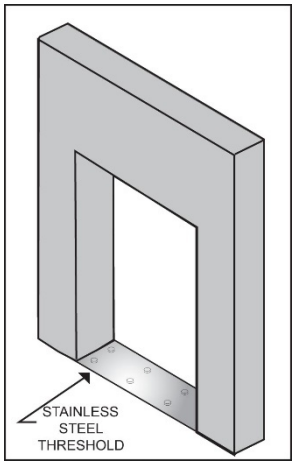

⚠ WARNING

Make sure that if any holes are drilled into the threshold, or when the fasteners are driven, that they do not damage the threshold heater wire inside or under the threshold assembly. Damage to this could impair the ability of the heater to melt any ice which forms on the threshold, or could even result in an electrical short.

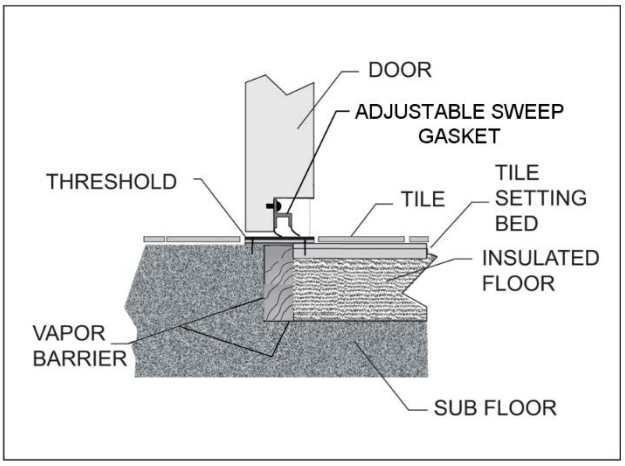

⚠CAUTION

Do not extend tile and grout through the unit door opening. Any tile and grout on the interior of a unit must be completely separated from tile and grout on the exterior to prevent condensation issues and excessive heat loss.

Door Sweep Adjustments

- Check that door section is plumb and level.
- Check operation of door, adjust door section if necessary.
- Ensure the door gasket seals around the entire door perimeter.
- Adjust wiper gasket to seal on floor/threshold.
- If door sweep has been adjusted down, seal gap between the bottom of the door gasket and the top of the door sweep.

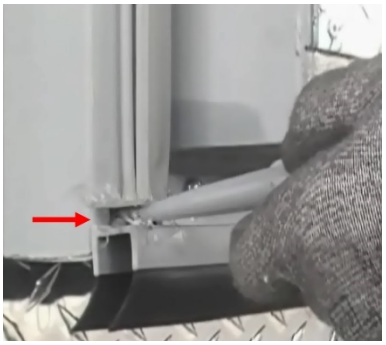

- Scan the QR Code below to view the Door Sweep Adjustment Service Video.

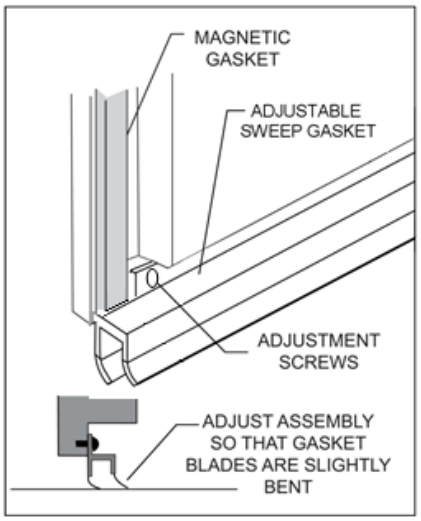

⚠ CAUTION

Ensure the exterior tile is level with the threshold throughout the entire door swing, to prevent damage to the door sweeper gasket.

Adjustable Hinges

- Some doors are equipped with adjustable hinges. Use the following procedure to properly adjust the hinges if necessary. Scan the QR Code below for the Adjustable Hinge Service Video.

⚠ WARNING

Never remove all hinge attachment screws without first securing the door or door section to prevent it from falling over and injuring someone.

⚠ CAUTION

Care must be taken during hinge adjustment to ensure that the hinge attachment fasteners are not over-torqued during reinstallation or retightening, as the underlying door tapping plate could become stripped out.

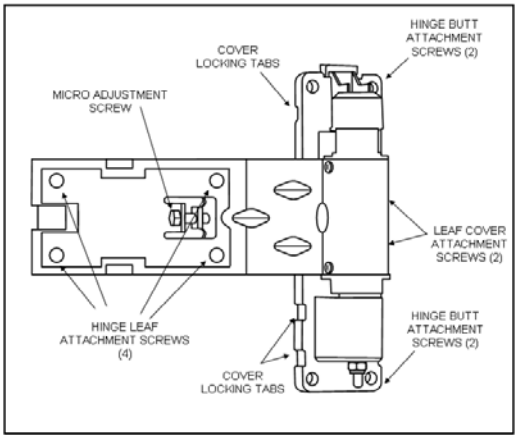

- Close the door completely and remove the hinge leaf cover screws from all hinge covers.
- Loosen up all 4 hinge leaf attachment screws on each hinge slightly so that they are free to move.
- Install shims around the entire perimeter of the door. The goal is to perfectly center the door in the opening.
- Using a small wrench, or finger pressure, tighten the micro-adjustment screw on each hinge until it is snug. Upper screws should be adjusted clockwise, lower screws counter-clockwise.
- Retighten all hinge leaf attachment screws for all hinges. Be sure not to over torque the screws
- Remove all of the shims, and check for door swing clearances and operation
- If the misalignment has been corrected, replace the hinge leaf covers and screws. If further adjustment is necessary, repeat the above steps using different combinations of shims until the adjustment is completed.

Thermometer Testing

- To test for thermometer accuracy, use a mixture of crushed ice and water to form a slush. Place the thermometer bulb in the mixture and check the reading. Thermometer should read approximately 32° F. If not, recalibrate per instructions. Thermometer testing is a required part of installation to insure against calibration drift that may have occurred during shipment. Once thermometer calibration is confirmed, the thermometer bulb should be mounted away from the door opening.

Thermometer Recalibration

- Remove the face cover of the analog dial thermometer. The cover will either screw off or pry off. Take care not to damage the cover during removal.

- For lowering the reading, carefully hold the pointer. Insert screwdriver in pointer slot and slowly turn clockwise a small amount. Adjust to proper setting.

- For higher temperature reading, carefully hold the pointer. Insert the screwdriver in pointer slot and slowly turn counter clockwise a small amount. Adjust to proper setting.

- Carefully reinstall the face of the thermometer.

- Scan the QR Code below for the Thermometer Calibration Service Video.

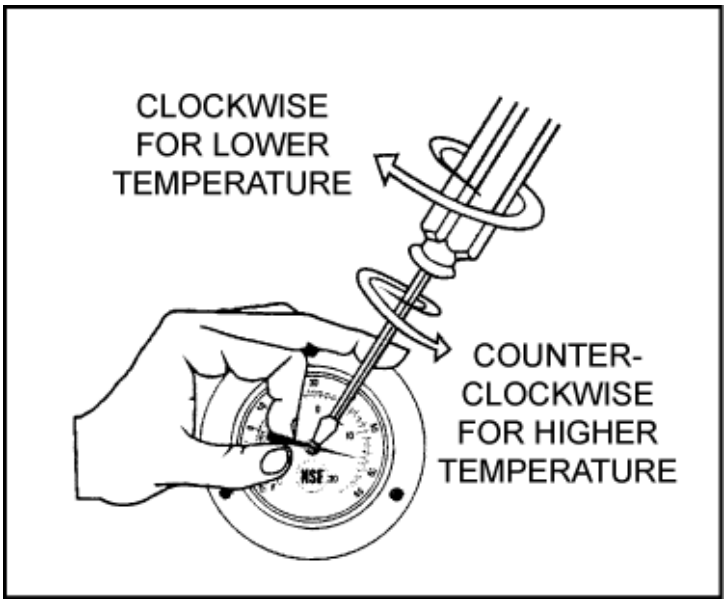

Electrical Connections

- Consult the installation drawing supplied with the walk-in to determine which application is required. Unless otherwise shown, the door section is furnished with a factory installed vapor proof light fixture on the interior of the section, and a light switch with pilot light indicator flush mounted on the exterior. All freezer door sections and cooler doors with metal thresholds are equipped with anti-condensate heaters around the entire perimeter. Heaters run underneath the thresholds, so care must be used if drilling through so that the wire does not get damaged.

- All wiring in the door and door section for heaters, switch, and light fixtures is factory installed and requires only simple field connection for complete operation; typical service required is 120-volt, 60 cycle, single phase, unless otherwise shown (consult the installation drawing).

- Electrical connections for the anti-condensate heaters are made on the interior of the door section inside the fixture base of the vapor proof light. Consult the assembly drawing for the specific electrical connection point for your unit.

⚠CAUTION

Force sealant around wires in entrance conduit to prevent moisture from entering fixture. Failure to eliminate airflow in conduit could void warranty.

- For wiring diagrams, visit our website or scan the QR Code below.

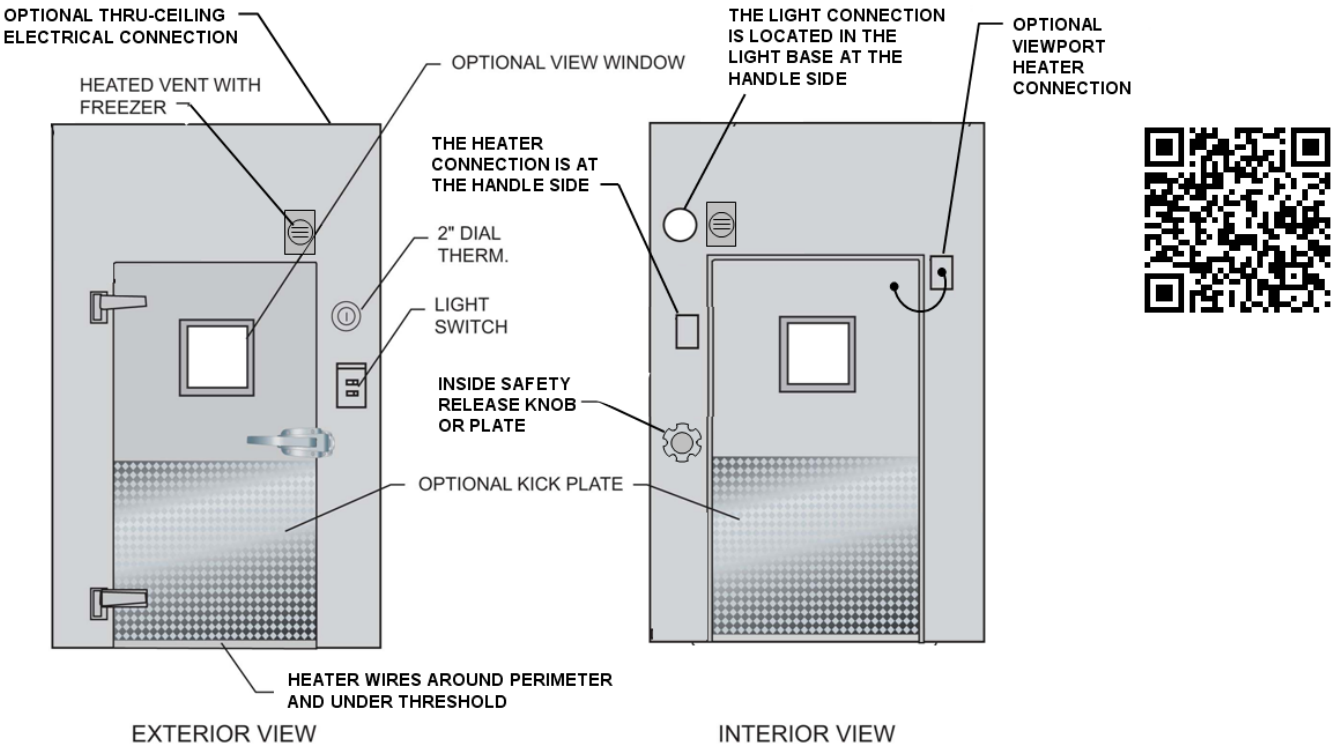

Tapered Roof System

- Scan the QR Code below for the Roof Cap With Slope Installation Service Video.

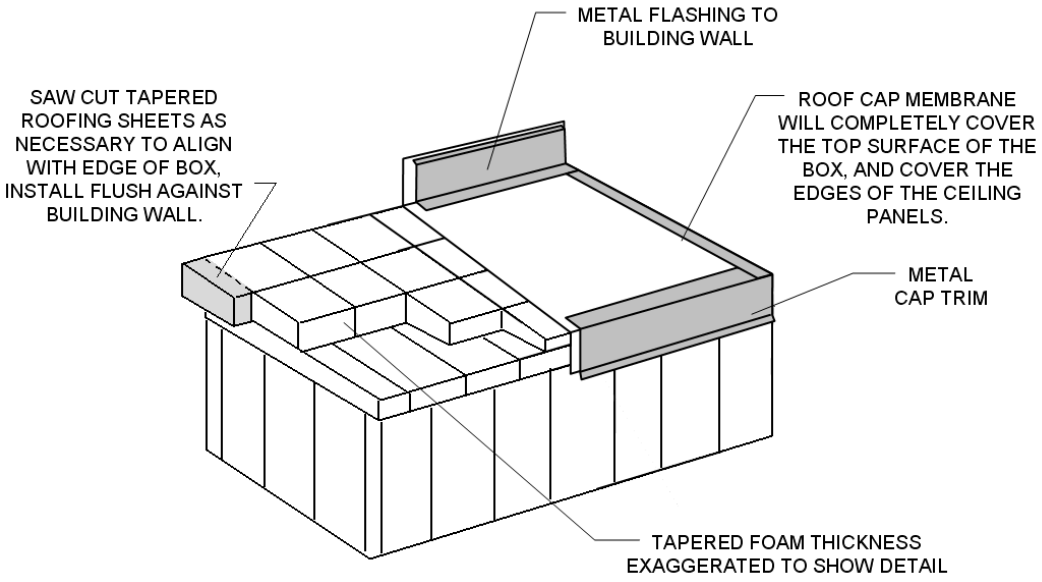

- The tapered roof system consists of tapered foam sheets, rolled polyethylene roof cap membrane, flashing, roof cap trim, and fasteners.
- Installation is identical to standard membrane roofs with the exception of adding the sloped foam sheets.
- In applications with very large roofs, multiple layers of sloped foam may be required.
- For install locations with a high wind speed rating per building code, extra fasteners will be supplied so that the installer can use 6 fasteners and plates in each of the 4”x4” foam sheet sections.
- The installer should use the fastener pattern shown below.

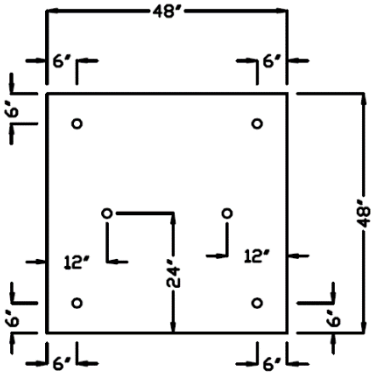

TYPICAL FULL SHEET
SCREW PATTERN

⚠ WARNING

Building codes require a minimum of ¼ inch per foot slope on outside roof systems. If a tapered roof system is not purchased with an exterior walk-in, it is the purchaser’s responsibility to ensure this requirement is met.

Membrane Roof System

- Locate the parts required for the installation of the membrane roof. The membrane roof is shipped rolled and folded. The termination bar and any roof trim required are shipped in 6” diameter by 10’ long cardboard tubes. A hardware box containing screws, fastening plates and sealant is also included.

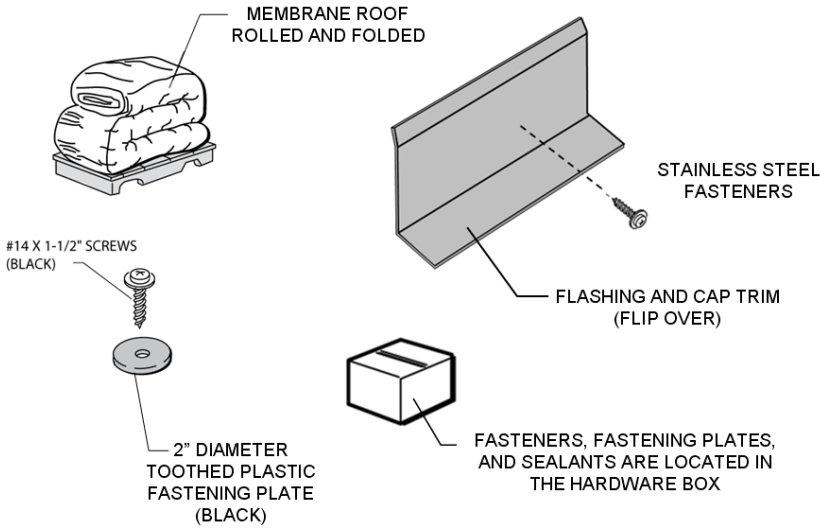

- Check the roof of the walk-in unit and remove any foreign matter. Seal all protruding rough edges and screw heads, rivets, etc. with tape or sealant. This will prevent any chance of penetrating or wearing a hole in the membrane roof cap.

⚠ WARNING

Make sure that all safety precautions are taken as necessary to prevent anyone working on the roofing installation from falling off from the top of the unit.

Ceiling panels are not intended for walking traffic or any other loads. Ensure that during install, a lift or boom is used to support installers and equipment weight, so that the extra loads are not supported by the ceiling panels.

⚠ CAUTION

Make sure that any debris is removed from the top of the unit before installing any roofing materials, as damage may occur to the membrane roof cap if installed over a sharp object.

- Install the sloped foam sheeting (if required) first. Consult the “As Built” drawing for proper placement. Locate the thickest tapered sheets and install them flush to the building wall, working toward the furthest edge with progressively thinner sheets.

- If the unit is free standing, align the thickest panel along the side of the ceiling panel.

- Verify the overall width and length of the membrane by measuring the sloped (of flat) dimension on top of the unit, and compare to the printed size on the rolled membrane. The membrane should overhang the top edge of the wall panel by 5” on all exposed sides of the walk-in unit, and extend no more than 5” up on adjacent building walls.

- The smooth (shiny) finish surface of the membrane is the exposed (up) side. The 3” fastening tabs are on the bottom side of the membrane.

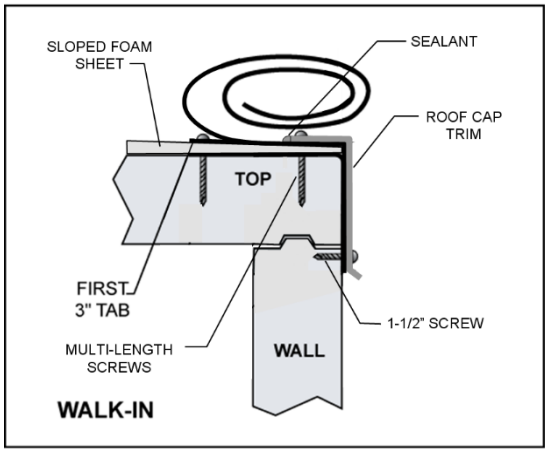

- Unroll roof membrane and align first 3” tab with a square chalk line across the unit. Use a GRiPull roof puller racket vice grip tool to pull membrane taut. Fasten 3” tab by using 1 ½” black #14 screw and fastening plate. Align membrane so that the tabs are perpendicular to the adjacent building.

- Start in the middle of the tab and work toward the edges placing the screws and plates 6” on center. Pull membrane toward edges to remove slack. The 1-1/2” screws should penetrate the top metal skin of the walk-in top panel.

- Start at the base of the wall by fastening a plate into the top of the walk-in cooler and into the wall of the adjacent building. Make sure no more than 5” of material is up the wall for proper termination. Work away from wall fastening 6” on center. The 1-1/2” screws should penetrate the top metal skin of the walk-in top panel.

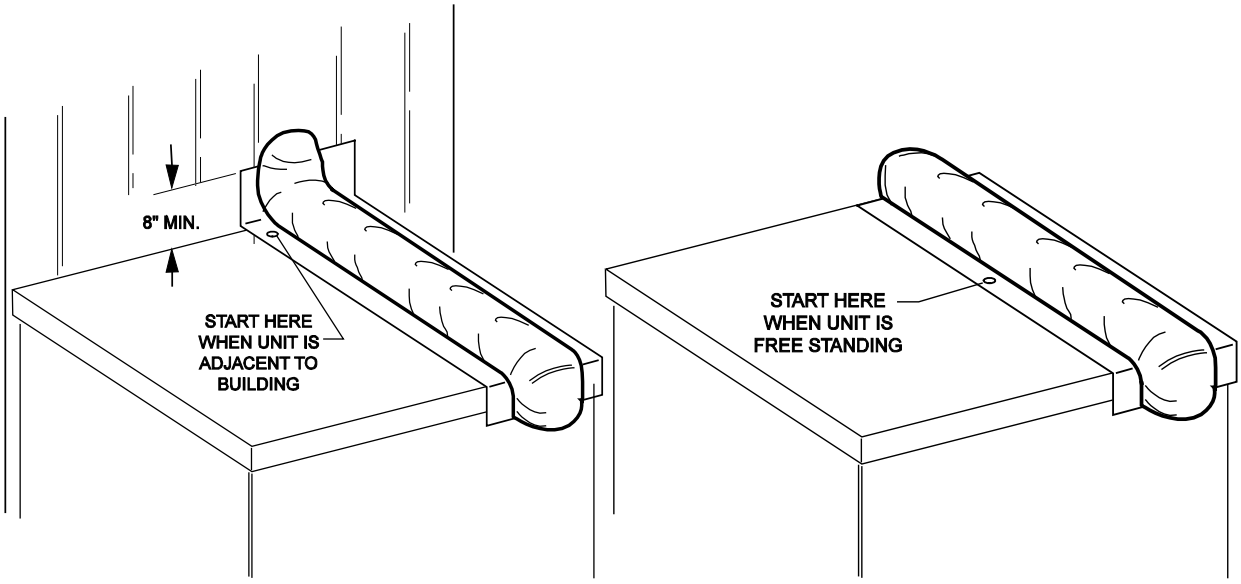

- If tapered roof system is used, the screw length will vary. Install the short screws at the low side and increasingly longer screws toward the high side. Extra care should be taken to only penetrate the top metal skin of the walk in top panel. Do not penetrate the interior metal skin.

- To prevent “Tab Rollover”, temporarily secure the edge of the overhanging roof membrane to the top edge of the wall before continuing to the second tab

- Unroll roof cap membrane to next tab and repeat the screw and fastening plate pattern. Always pull slack out of membrane before starting a row of fasteners. Use of GRiPull roof puller racket vice grip tool is ideal to keep material taut.

- After all fastening tabs have been secured, fold corners as shown. A Pull-Tite hand/knee puller vice grip tool can be used to pull membrane taut around perimeter and then install roof cap termination bar and trim. Use 1-1/2” stainless steel screws spaced 6” on center. Seal top edge of termination bar.

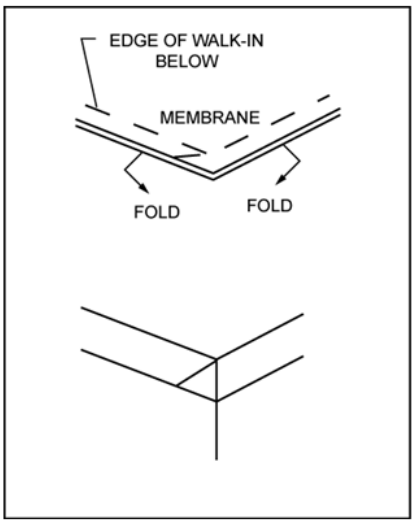

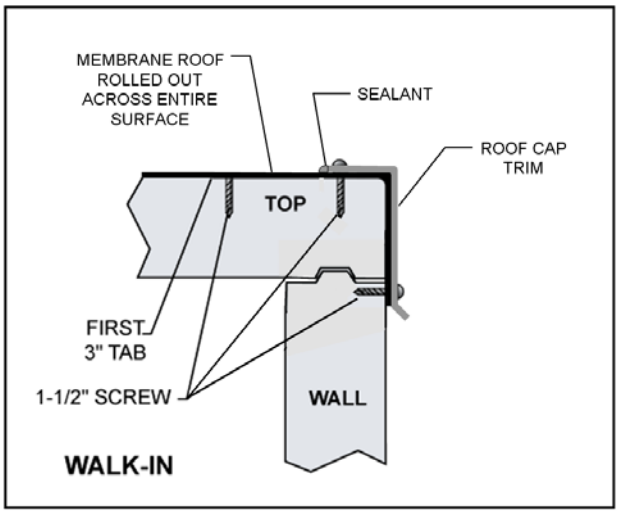

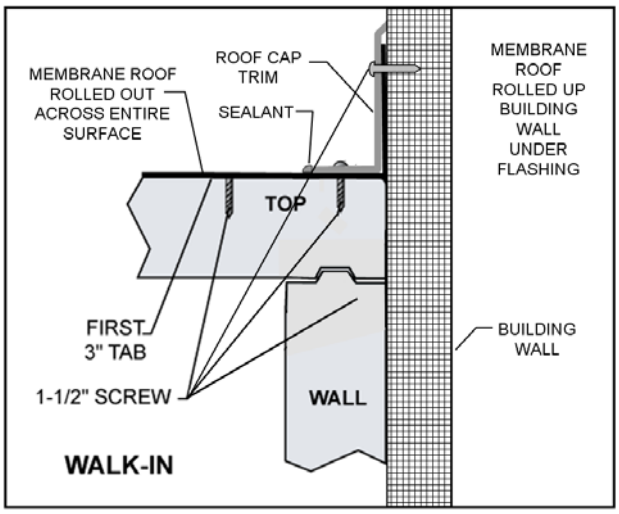

Section 3
Maintenance

Maintenance And Housekeeping Recommendations

⚠ WARNING

Walk-in floors can become slippery and hazardous if allowed to become wet, greasy, or icy. Follow maintenance and housekeeping recommendations outlined below to minimize any hazards.

- Inspect the conditions of abrasive coated anti-skid strips on ramps monthly. Replace or add additional strips when necessary. Abrasive coated anti-skid strips are factory installed on ramps. Additional strips are available from the factory.
- Keep all walkway surfaces clean and free of spilled liquids and food particles. This includes the floor surface, hardwood floor racks, and diamond tread plate.
- Inspect refrigeration equipment frequently for proper functioning of evaporators, drain pan heaters, defrost controls, and drain line heaters. Refer to manufacturers' instructions for the refrigeration system.
- Condensate water must never be allowed to drip on the walk-in floor. Refer to refrigeration system instructions for proper condensate drain line installation.
- If entry doors are to be held open for periods longer than 5 minutes, a vinyl strip curtain should be used. When doors are opened for extended periods of time, frost can form on the ceiling and floor due to the excessive condensation of warm moist air inside the walk-in. This can result in the formation of an ice film on wall, ceiling and floor surfaces or around gaskets.
- Inspect the door hardware and sweep gasket monthly for ease of operation. Door hardware is self-lubricating and does not require periodic lubrication. Sweep gasket must be adjusted to allow free movement and proper seal. Any damaged hardware should be replaced immediately to prevent permanent damage to the door.
- Frost or condensation appearing around the door jamb or heated pressure relief vent indicates that the electric heater is inoperable, or excessive moisture is present. Check power supply and electrical connections. Replace heaters if necessary.
- All metal surfaces, magnetic door gaskets and door sweep gaskets should be cleaned frequently with a mild detergent and hot water. Remove all soap film and dry thoroughly with a clean cloth. Never use high pressure hose or large amounts of water to clean walk-in.

System Start-up Checklist

Date System Installed: ___/_____/_____
Installer and Address: _____

_____

Phone Number: (_____) _____-_____

Start-Up Service Agency:_____

_____

Phone Number: (_____) _____-_____

Freezer Condensing Unit				
Inspection Feature	**Data**	**Accept**	**Reject**	**Action Required**
Model Number:				
Serial Number:				
Electrical Volts:				
Electrical Phase:				
Amperage @ L1:				
Amperage @ L2:				
Amperage @ L3:				
Ambient Temp:	°			
Comp. Discharge Pressure:	PSI			
Comp. Suction Pressure:	PSI			
Suction Line Temp @ Comp.:	°			
Discharge Line Temp @ Comp.:	°			
Comp. Superheat:	°			
Defrost Setting (4 day/45 min):				
All electrical connections are tight:				
Unit base properly supported:				
Fans Running & No Vibration:				
All guards, covers attached:				
Refrigerant Sight Glass Clear:				
Comp. Oil Level @ ½ Sight Glass:				
Comp. Mounting Clips Removed:				
Suction line insulated fully and properly supported:				

Freezer Evaporator				
Inspection Feature	**Data**	**Accept**	**Reject**	**Action Required**
Evaporator installed with nylon bolts with proper airflow clearance:				
Model Number:				
Serial Number:				
Electrical Volts:				
Electrical Phase:				
Suction Line Temp @ Evap:	°F			
Evap Superheat:	°F			
Thermostat Set:	°F			
Operating Temp:	°F			
TXV Bulb Properly Mounted:				
All guards, covers attached:				
All electrical connections are tight:				
Defrost Heater Amp Draw:	A			

Freezer Piping				
Inspection Feature	**Data**	**Accept**	**Reject**	**Action Required**
Suction Lines Insulated:				
Oil Trap at Base of Suction Riser:				
Copper Drain Lines Sloped Min 1/2" ft:				
Piping Supported Every 5':				
Copper drain line heater attached, working, and insulated:				
Copper Drain Line Trapped Outside Freezer Space:				

Cooler Condensing Unit				
Inspection Feature	**Data**	**Accept**	**Reject**	**Action Required**
Model Number:				
Serial Number:				
Electrical Volts:				
Electrical Phase:				
Amperage @ L1:				
Amperage @ L2:				
Amperage @ L3:				
Ambient Temp:	°F			
Comp. Discharge Pressure:	PSIG			
Comp. Suction Pressure:	PSIG			
Suction Line Temp @ Comp.:	°F			
Discharge Line Temp @ Comp.:	°F			
Comp. Superheat:	°F			
Defrost Setting (4 day/45 min):				
All electrical connections are tight:				
Unit base properly supported:				
Fans Running & No Vibration:				
All guards, covers attached:				
Refrigerant Sight Glass Clear:				
Comp. Oil Level @ ½ Sight Glass:				
Comp. Mounting Clips Removed:				
Suction line insulated fully and properly supported:				

Cooler Evaporator				
Inspection Feature	**Data**	**Accept**	**Reject**	**Action Required**
Evaporator installed with nylon bolts with proper airflow clearance:				
Model Number:				
Serial Number:				
Electrical Volts:				
Electrical Phase:				
Suction Line Temp @ Evap:	°F			
Evap Superheat:	°F			
Thermostat Set:	°F			
Operating Temp:	°F			
TXV Bulb Properly Mounted:				
All guards, covers attached:				
All electrical connections are tight:				

Cooler Piping				
Inspection Feature	**Data**	**Accept**	**Reject**	**Action Required**
Suction Lines Insulated:				
Oil Trap at Base of Suction Riser:				
Copper Drain Lines Sloped Min 1/2" ft:				
Copper Drain Lines Insulated:				
Copper Piping Supported Every 5':				
Copper Drain Line Trapped Outside Cooler Space:				

Walk-In Freezer				
Inspection Feature	**Data**	**Accept**	**Reject**	**Action Required**
Serial Number:				
Interior Lights Installed and Working:				
All Penetrations Sealed:				
Doors/Jambs Squared and Operating Properly:				
All Panel Locks Fully Engaged:				
All Plug Buttons Installed:				
Door Heater Working:				
Door Sweeps Adjusted:				
Heat Air Vent Working:				
Door Closers Adjusted and Working:				
Wainscot and Trim Installed:				
Alarm Set and Working:				
Thermometer Bulb Mounted and Calibrated:				
Walk-In Clean (no excessive caulk, etc.)				
Walk-in at proper temperature:				

Walk-In Cooler				
Inspection Feature	**Data**	**Accept**	**Reject**	**Action Required**
Serial Number:				
Interior Lights Installed and Working:				
All Penetration Sealed:				
Doors/Jambs Squared and Operating Properly:				
All Panel Locks Fully Engaged:				
All Plug Buttons Installed:				
Door Heater Working:				
Door Sweeps Adjusted:				
Heat Air Vent Working:				
Door Closers Adjusted and Working:				
Wainscot and Trim Installed:				
Alarm Set and Working:				
Thermometer Bulb Mounted and Calibrated:				
Walk-In Clean (no excessive caulk, etc.)				
Walk-in at proper temperature:				

Notes:

Superintendent/Customer Signature: _____ Date: _____

Service Tech/Installer Signature: _____ Date: _____

This page intentionally left blank

This page intentionally left blank

This page intentionally left blank

This page intentionally left blank

KOLPAK
2915 TENNESSEE AVE. NORTH, PARSONS, TN 38363

800-826-7036
WWW.KOLPAK.COM

WELBILT
Bringing innovation to the table

WWW.WELBILT.COM

Welbilt provides the world's top chefs, and premier chain operators or growing independents with industry leading equipment and solutions.
Our cutting-edge designs and lean manufacturing tactics are powered by deep knowledge, operator insights, and culinary expertise.
All of our products are backed by KitchenCare® – our aftermarket, repair, and parts service.

▶CLEVELAND ▶DELFIELD® ▶FRYMASTER® ▶KOLPAK® ▶MANITOWOC® ▶MERRYCHEF®
▶CONVOTHERM ▶FITKITCHEN™ ▶GARLAND ▶LINCOLN ▶MERCO® ▶MULTIPLEX®

©2017 Welbilt Inc. except where explicitly stated otherwise. All rights reserved. Continuing product improvement may necessitate change of specifications without notice.

Part Number: 50000400-11 09/19