VEVOR®

TOUGH TOOLS, HALF PRICE

Technical Support and E-Warranty Certificate www.vevor.com/support

COMMERCIAL REFRIGERATOR

MODEL:XLS-215WG/XLS-295WG/XLS-365WG/XLS-450WG

We continue to be committed to provide you tools with competitive price.
"Save Half", "Half Price" or any other similar expressions used by us only represents an estimate of savings you might benefit from buying certain tools with us compared to the major top brands and does not necessarily mean to cover all categories of tools offered by us. You are kindly reminded to verify carefully when you are placing an order with us if you are actually saving half in comparison with the top major brands.

VEVOR®
TOUGH TOOLS, HALF PRICE

Commercial Refrigerator

MODEL: XLS-215WG/XLS-295WG/XLS-365WG/XLS-450WG

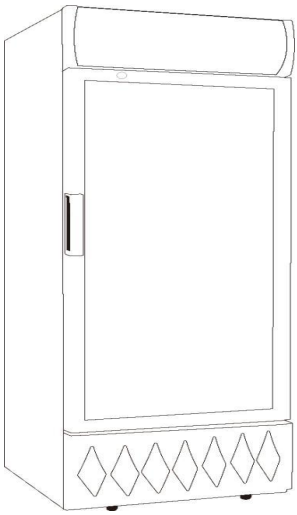

NEED HELP? CONTACT US!

Have product questions? Need technical support? Please feel free to contact us:

Technical Support and E-Warranty Certificate
www.vevor.com/support

This is the original instruction, please read all manual instructions carefully before operating. VEVOR reserves a clear interpretation of our user manual. The appearance of the product shall be subject to the product you received. Please forgive us that we won't inform you again if there are any technology or software updates on our product.

Symbol	Symbol Description
	Warning: To reduce the risk of injury, the user must read the instructions manual carefully.
	This symbol, placed before a safety comment, indicates a kind of precaution, warning, or danger. Ignoring this warning may lead to an accident. To reduce the risk of injury, fire, or electrocution, please always follow the recommendation shown below.
	**CORRECT DISPOSAL:** This product is subject to the provision of European Directive 2012/ 19/EC. The symbol showing a wheelie bin crossed through indicates that the product requires separate refuse collection in the European Union. This applies to the product and all accessories marked with this symbol. Products marked as such may not be discarded with normal domestic waste, but must be taken to a collection point for recycling electrical and electronic devices.

Important Safeguards

• This equipment is intended for the storage and display of non-time /temperature control for safety foods bottled or canned products only.
• This appliance is not intended for use by persons (including children) with reduced physical, sensory or mental capabilities, or lack of experience and knowledge, unless they have been given supervision or instruction concerning use of the appliance by a person responsible for their safety.
• Children should be supervised to ensure that they do not play with the appliance.
• Cleaning and user maintenance shall not be made by children without supervision.
• Do not store explosive substances such as aerosol cans with a flammable

propellant in this appliance.
• If the supply cord is damaged, it must be replaced by the manufacturer or its service agent or a similarly qualified person in order to avoid a hazard.
• Please according to local regulations regarding disposal of the appliance for its flammable blowing gas. Before you scrap the appliance, please take off the doors to prevent children trapped.
• WARNING – Keep ventilation openings, in the appliance enclosure or in the built-in structure, clear of obstruction.
• WARNING – Do not use mechanical devices or other means to accelerate the defrosting process, other than those recommended by the manufacturer
• WARNING – Do not damage the refrigerant circuit.
• WARNING – Do not use electrical appliances inside the food storage compartments of the appliance, unless they are of the type recommended by the manufacturer.
• This appliance is intended to be used in household and similar applications such as staff kitchen areas in shops, offices and other working environments; farm houses and by clients in hotels, motels and other residential type environments; Catering and similar non-retail applications.
• The appliance shall not be installed in public corridors or lobbies.
• Warning: the appliance shall be installed in accordance with national wiring regulations
• The appliance is to be installed in accordance with the Safety Standard for Refrigeration Systems, ANSI/ASHRAE 15.
Notice: Any person who is involved with working on or breaking into a refrigerant circuit should hold a current valid certificate from an industry-accredited assessment authority, which authorizes their competence to handle refrigerants safely in accordance with an industry recognized assessment specification.
Notice: Servicing shall only be performed as recommended by the equipment manufacturer. Maintenance and repair requiring the assistance of other skilled personnel shall be carried out under the supervision of the person competent in the use of flammable refrigerants.

Notice: Component parts shall be replaced with like components so as to minimize the risk of possible ignition due to incorrect parts.
The appliance is to be installed in accordance with the Safety

• WARNING

Do not use means to accelerate the defrosting process or to clean, other than those recommended by the manufacturer.
The appliance shall be stored in a room without continuously operating ignition sources(for example: open flames, an operating gas appliance or an operating electric heater.
Do not pierce or burn.
Be aware that refrigerants may not contain an odour.
• Warning: The appliance shall be stored in a well-ventilated area where the room size corresponds to the room area as specified for operation; Warning: The appliance shall be stored in a room without continuously operating open flames (for example an operating gas appliance) and ignition sources (for example an operating electric heater). Warning: The appliance shall be stored so as to prevent mechanical damage from occurring.
• Check that cabling will not be subject to wear, corrosion, excessive pressure, vibration, sharp edges, or any other adverse environmental effects. The check shall also take into account the effects of aging or continual vibration from sources such as compressors or fans.
• Before carrying out Decommissioning procedure, it is essential that the technician is completely familiar with the equipment and all its detail. It is recommended good practice that all refrigerants are recovered safely. Prior to the task being carried out, an oil and refrigerant sample shall be taken in case analysis is required prior to re-use of recovered refrigerant. It is essential that electrical power is available before the task is commenced.
When removing refrigerant from a system, either for servicing or decommissioning, it is recommended good practice that all refrigerants are removed safely.
The recovery equipment shall be in good working order with a set of instructions concerning the equipment that is at hand and shall be suitable

for the recovery of all appropriate refrigerants including, when applicable,

FLAMMABLE REFRIGERANTS

The recovered refrigerant shall be returned to the refrigerant supplier in the correct recovery cylinder, and the relevant waste transfer note arranged. Do not mix refrigerants in recovery units and especially not in cylinders

	Refrigerant class A3 per ANSI/ASHRAE 34

 **Warning:**	Risk of fire / flammable materials, taking care to avoid causing a fire by igniting flammable material.

The maximum loading of each type of shelf is 50lbs/22.35kg.

The ambient temperature and humidity conditions of the show case climate class following the tab below

Test room climate class	Dry bulb temperature ℃	Relative humidity %	Dew Point ℃	Water vapour mass in dry air g/kg
0	20	50	9.3	7.3
1	16	80	12.6	9.1
8	23.9	55	14.3	10.2
2	22	65	15.2	10.8
3	25	60	16.7	12.0
4	30	55	20.0	14.8
6	27	70	21.1	15.8
5	40	40	23.9	18.8
7	35	75	30.0	27.3

NOTE the water vapour mass dry air is one of the main points influencing the performance and the energy consumption of the cabinets. Therefore, the order of the climate class in the table is based on the water vapour mass column.
See also Annex B to compare lab and store conditions.

• All maintenance staff and others working in the local area shall be instructed on the nature of work being carried out. Work in confined spaces shall be avoided.

• If any hot work is to be conducted on the refrigerating equipment or any associated parts, appropriate fire extinguishing equipment shall be available on hand. A dry chemical or CO2 fire extinguisher should be adjacent to the charging area.

• Notice: Any person who is involved with working on or breaking into a refrigerant circuit should hold a current valid certificate from an industry-accredited assessment authority, which authorizes their competence to handle refrigerants safely in accordance with an industry recognized assessment specification.

• Notice: Servicing shall only be performed as recommended by the equipment manufacturer. Maintenance and repair requiring the assistance of other skilled personnel shall be carried out under the supervision of the person competent in the use of flammable refrigerants.

• No person carrying out work in relation to a REFRIGERATING SYSTEM which involves exposing any pipe work shall use any sources of ignition in such a manner that it may lead to the risk of fire or explosion. All possible ignition sources, including cigarette smoking, should be kept sufficiently far away from the site of installation, repairing, removing and disposal,during which refrigerant can possibly be rel leased to the surrounding space. Prior to work taking pl ace, the area around the equipment shall be surveyed to make sure that there are no flammable hazards or ignition risks. “No Smoking" signs shall be displayed.

• Checking for presence of refrigerant, The area shall be checked with

an appropriate refrigerant detector prior to and during work, to ensure the technician is aware of potentially toxic or flammable atmospheres. Ensure that the leak detection equipment being used is suitable for use with all applicable refrigerants, i.e., non-sparking, adequately sealed, or intrinsically safe.

• Ensure that the area is in the open or that it is adequately ventilated before breaking into the system or conducting any hot work. A degree of ventilation shall continue during the period that the work is carried out. The ventilation should safely disperse any rel leased refrigerant and preferably expel it externally into the atmosphere. Where electrical components are being changed, they shall be fit for the purpose and to the correct specification. At all times, the manufacturer's maintenance and service guidelines shall be followed. If in doubt, consult the manufacturer's technical department for assistance.

• Detection of flammable refrigerants: Under no circumstances shall potential sources of ignition be used in the searching for or detection of refrigerant leaks. A halide torch (or any other detector using a naked flame) shall not be used.

Details of Product

It uses quality, effective and hermetic compressor with wide rang of starting voltage, suitable ambient temperature: not higher than 100°F/38°C, reasonable matching of the showcase system guarantees its powerful refrigerant ability and energy saving.

Goods stored can be displayed clearly through the door made from clear glass.

The thermal insulation layer of the appliance made from hard polyurethane makes it be light and good ability to keep the items inside cold.

Cabinets are powder-coated steel exterior and white HIPS interior.

Specifications:

• Doors: 1
• Temperature inside: 0°C -- 10°C / 32°F -- 50°F
• LED illuminated exterior canopy
• LED interior illumination
• Double pane tempered glass door
• Highly effective compressor with Hydro Carbon R600a and R290 refrigerant
• Adjustable shelves for different height of drinks and other items
• Built-in lock to secure the goods safe

Caution for Safety

1.If used in North America area, the range of operating voltage: 98~132V. In order to avoid damaging the electrical performance of the compressor, please equip with a Voltage Stabilizer appliance of power not less than 500w, to protect the Cooler when the voltage is lower than 98V or higher than 132V. If used in Europe area, the range of operating voltage: 187~242V.
2.Individual single-phase socket must be used. It should be reliably connected to a grounding wire. Caution: The grounding wire is not allowed to connect to a water pipe or a gas pipe.
3.Strong base, strong acid, organic solvent and corrosive goods or those are easy to pollute to food are prohibited storing in the showcase; otherwise, it can cause corrosiveness or accident.
4.Don’t raise the showcase or the shell of the electric parts, or it will cause the decline in insulation and cause corrosion.
5.When the showcase will be out of use for a long time, disconnect the power first, then clean it. Please examine the circuit whether it is ok before reuse.
6.Appliance is Freestanding Installation Type and not suitable for outdoor use.

Prudence pour la sécurité

1.Si utilisé en Amérique du Nord, plage de tension de fonctionnement: 98 ~ 132v. Afin d'éviter d'endommager les performances électriques du compresseur, équipez - vous d'un régulateur d'au moins 500W pour protéger le refroidisseur lorsque la tension est inférieure à 98v ou supérieure à 132v. Si utilisé dans la région européenne, plage de tension de fonctionnement: 187 ~ 242v.
2.la prise individuelle monophasée doit être utilisée. Il doit être raccordé de manière fiable à un fil de mise à la terre. ATTENTION: le fil de mise à la terre n'est pas autorisé à se raccorder à un tuyau d'eau ou à un tuyau de gaz.
3.la base forte, l'acide fort, le solvant organique et les produits corrosifs ou ceux sont faciles à polluer à l'alimentation sont interdits stocker dans la vitrine; Sinon, elle peut causer de la corrosivité ou un accident.
4.ne soulevez pas la vitrine ou la coque des pièces électriques, ou elle causera le déclin de l'isolant et provoquera de la corrosion.
5.lorsque la vitrine sera hors d'usage pendant une longue période, débranchez d'abord la puissance, puis nettoyez-le. S'il vous plaît examiner le circuit si elle est OK avant la réutilisation.
6.Les appareils électriques sont de type autonome et ne conviennent pas à une utilisation en extérieur.

Operation

1.Unpack all packages before using the showcase. Don’t Bend it over more than 60°, while moving it.
2.The showcase should be installed in the environment of good ventilation, Cool and dry and without corrosive gas. It should not be installed close to heat sources or directly under the sunlight. The space more than 10cm between the wall of the front and the back of the showcase should be

allowed. When installing, the universal wheels should be padded well. So as to make the showcase be level and stable, or it will cause vibration and too much noise.
3.When initial operation, the refrigerator should run emptily about one hour before storing food in it.
4.The evaporator fans run continuously during the refrigeration cycles to maintain the factory set internal temperature range.
5.How to use the temperature control: the thermostat could adjust the temperature inside the showcase. When you turn the knob in clockwise. The bigger the figure, the lower the temperature. Generally, the position of '5' is suitable.'OFF' position stands for no cooling.'Max' position stands for maximum cooling. The temperature will vary depending on the quantity of the food and drinks stored and on the frequency with which the door is opened.



6.Light switch location varies by XLS model. Most models have the light switch located on the right side of the top light box.
7.To save energy, the door should not be frequently opened or left open for a long time.
8.Refrigerators with mechanical temperature controls will defrost during every compressor off-cycle.

Wiring Diagrams

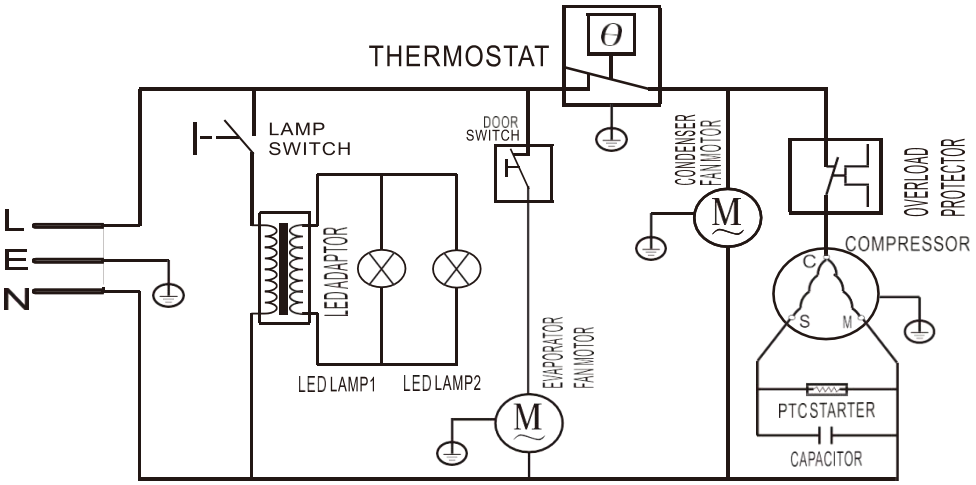

Caution for Using

The surface and the inside of the showcase should be dry and clean. Long term moisture with cause the showcase rust slowly. (There will be some stains on the surface.)

Periodical cleaning is suggested for your reference. Generally, 30-45 days once is best. When cleaning, it is best to wipe the inside and the surface of the showcase with the soft cloth with neutral soap or detergent.

Gasket Maintenance: gaskets require cleaning to prevent mold and mildew buildup and to maintain the gasket elasticity. Clean gaskets with warm soapy water. Avoid full strength cleaning products on gasket, this can cause the gaskets to become brittle and prevent proper sealing. Never use sharp tools or knives, which could tear the gasket and/or rip the bellows, to scrape or clean the gasket. Gaskets are easy to replace and do not require the use of tools. To remove and replace the dart style gaskets, pull the gasket out of the groove in the door and press the new gasket back into place.

Prudence pour l'utilisation

• la surface et l'intérieur de la vitrine doivent être secs et propres. L'humidité à long terme avec la cause la rouille de vitrine lentement. (il y aura des taches sur la surface.)
• le nettoyage périodique est suggéré pour votre référence. En général, 30-45 jours une fois est
le meilleur. Lors du nettoyage, il est préférable d'essuyer l'intérieur et la surface de la vitrine avec le chiffon doux avec du savon neutre ou du détergent.
• joint d'étanchéité entretien: les joints nécessitent un nettoyage pour empêcher l'accumulation de moisissures et de moisissures et maintenir l'élasticité du joint. Nettoyez les joints avec de l'eau chaude savonneuse. Évitez les produits nettoyants pleins de force sur gaskes, ceci peut causer les garnitures pour devenir cassantes et pour empêcher l'étanchéité appropriée. Ne jamais utiliser des outils tranchants ou des couteaux, qui pourraient déchirer le joint et/ou déchirer le soufflet, pour gratter ou nettoyer le joint. Les joints sont faciles à remplacer et ne nécessitent pas l'utilisation d'outils. Pour retirer et réinstaller les joints de style DART, retirez le joint de la rainure de la porte et pressez le nouveau joint en place.

Attention: To ensure safety, the power plug must be pulled out before cleaning. All safety precautions must be followed. Dispose of properly in accordance with Federal or local regulations. Risk of fire or explosion due to puncture of refrigerant tubing. Follow handling instructions carefully.

DANGER: Risk of fire or explosion. Flammable refrigerant R600a or R290 used. To be repaired only by trained service personnel. Do not use mechanical devices to defrost refrigerator. Do not puncture refrigerant tubing.

ATTENTION: pour assurer la sécurité, la fiche d'alimentation doit être retirée avant le nettoyage. Toutes les précautions de sécurité doivent être

respectées. Disposer correctement conformément aux réglementations fédérales ou locales. Risque d'incendie ou d'explosion dû à la perforation du tube réfrigérant. Suivre la manutention instrucitons soigneusement.

Danger: risque d'incendie ou d'explosion. Réfrigérant inflammable R600a ou R290 utilisé. Être réparé uniquement par un technicien qualifié. N'utilisez pas de dispositifs mécaniques pour dégivrer le réfrigérateur. Ne pas perforer le tube réfrigérant.

Attention
Children should not operate this equipment.
Children should not play around this equipment.
The manual is only for reference. We have the right to change materials and specifications without notice.

Trouble Shooting

Breakdown	Case	Removal method
The indicator is not on. The compressor doses not start.	The plug isn't connected to the socket really.	Replug it.
	no power	Connect the socket with power.
The indicator is on ,but the compressor doesn't work and buzzes only	The power voltage is＜98V in North America or ＜187V in Europe	Put a power-regulater more than 1000W power together .
The compressor stops a minute after start, and restart after a few minutes, and so repeatedly.	The power voltage is＞132V in North America or ＜242V in Europe.	

The compressor works normally, but the temperature in the cabinet lowers too slowly.	The door is opened too frequently.	Reduce open times.
	The food in the cabinet is too much, and placed improperly.	Place foods properly keep place between them for ventilation of cold air.
	The frost film is too thick.	Take out foods and defrost.
	The surface of the condenser is too dirty.	Stop and clean the condenser .
	The door seals badly.	Adjust the door seal.
The noise is too loud	The freezer is placed unstably.	Place it stably.
	The fixing of the freezer is loose.	Tighten the fixing.
	there's contact between pipes.	Separate them.

The following are not faults:

• When the freezer is working or after stopping for a while, the refrigerant in the pipes is cycling and gives out " running water " sounds.
• The surface temperature of the compressor may be up 70°C -- 80°C / 158°F -- 176°F when it is working.
• The back side of step freezer gives out heat.
• In rainy season, the outer surface of the cabinet may have dew, which makes no defects on normal use. Just dry it with a piece of cloth.

Made In China

VEVOR®

TOUGH TOOLS, HALF PRICE

Technical Support and E-Warranty Certificate

www.vevor.com/support