

INTRODUCTION

Dear Customer,

Thank you for choosing a VITRIFRIGO product. We hope that you will be completely satisfied with your purchase.

This manual is considered an integral part of the refrigerator and must accompany it from the time of sale to the end user. Vitrifrigo prohibits the reproduction of this manual in any part or form.

Before leaving our works, every refrigerator is subjected to stringent tests and inspections to guarantee correct operation.

For more information or clarifications, please contact one of our assistance centres or our offices directly.

Vitri Alceste



More information https://www.caravansplus.com.au

WARNINGS

- Read this manual carefully before using the refrigerator.
- If this appliance is replacing an older model, any locking device must be rendered completely non-functional prior to disposal.
- Verify that the pachaging should be not demaged, otherwise tell it to the forwarder agent.
- Unpacking and installation of the unit must be carried out with the utmost care. To avoid accidental injury use protective gloves, in particular for the models with remote refrigerating unit (Fig. 3).
- After unpacking the appliance, ensure that it is not damaged in any way. Notification of damage must be given to the dealer no later than 24 hours from the purchase date.
- The appliance must be used exclusively for the conservation of food and drinks.
- Install the appliance far from any heat sources and allow for sufficient ventilation (see indications below).
- After installation, wait at least one hour before switching on the refrigerator. This precaution ensures optimum refrigeration efficiency.
- Before connecting the appliance to the power supply, check that the line voltage corresponds to the specifications stated on the appliance rating plate and that of the compressor.
- After installation check, that the appliance is not standing on the power cable.
- For any operational problems, please contact your nearest Vitrifrigo assistance centre. In any case, always refer to qualified personnel for assistance.
- Before carrying out any maintenance or cleaning operations, disconnect the appliance from the power supply.
- Do not put glass containers holding liquids into the freezer compartment.
- Dispose of packaging material in accordance with local by-laws for sorted waste recycling.
- This machine cannot be thrown away with urban waste; it must be disposed of as separate refuse. Contact the special refuse collection centres for electrical and electronic appliances in your area or return it to your dealer when you purchase a newer model.
- If not disposed of correctly, the machine may cause damage to the environment and to people's health on account of the specific substances it contains.
- The symbol shown here opposite indicates that this machine cannot be disposed of with urban waste.



- Should you fly tip or dispose of the machine incorrectly, you risk fines and/or legal action being taken against you, as specified by the laws in force.
- The use of the refrigerator for anything other than its intended purpose is strictly prohibited.
- Always keep the appliance perfectly clean and maintain the safety devices in good working order.
- Keep the air vents in the appliance casing and/or cabinet for built-in installation free from obstruction.
- Never remove safeguards (casings) from the refrigerator.
- Always perform the checks, inspections, and scheduled maintenance, as specified on page x of this manual.
- The appliance must never be exposed to rain.
- Suitable for campsite use.

More information https://www.caravansplus.com.au

General Information

Purpose of the manual

This manual, which applies to refrigerators from the "INTERIOR (230 V AC) OCEAN-RUNNER (12/24 V DC)" ranges, is intended as a guide for the correct and safe use of same as well as for their routine maintenance.
To learn all about how to operate and use your refrigerator within a short space of time, you must read this use and maintenance manual carefully as from the first time of use.
The correct operation of your refrigerator also depends on efficient and effective maintenance. However, it is necessary to know how to perform maintenance operations. The instructions for use indicate all of the operations required to start, stop and operate your refrigerator.
Your refrigerator has been made in compliance with all of the safety requirements foreseen by the relevant directives. However, maximum user safety depends on reading this manual carefully as well as on constant, careful cleaning and maintenance.
Some of the information or figures in this manual may show details or features that differ slightly from those on your refrigerator; this does not alter essential information.
Due to our policy of constant product improvement, your refrigerator may have variations not mentioned in this manual. Any variations will be included in subsequent versions as necessary.

Manufacturer's identity

This refrigerator is designed and made exclusively by:

Vitrifrigo s.r.l.
Via Della Produzione, 9
61020 Montecchio (PU)
Italy
Tel. +39 0721 491080
Fax. +39 0721 497739
E-Mail. vitrifrigo@vitrifrigo.com
www.vitrifrigo.com

More information https://www.caravansplus.com.au

DESCRIPTION OF THE APPLIANCE (Fig. 2 and Fig. 7)

12/24Vcc – 220Vca

A) Horizontal evaporator
A1) Vertical evaporator
B) Drip tray
C) Thermostat housing
D) Removable wire racks
E) Glass shelf (on some models only)
F) Salad drawer (on some models only)
G) Door compartments (removable)

12/24Vcc Portatili

A) Basket
B) Pawl closure
C) Evaporator
D) Bracket fastening screw
E) Fixing bracket
F) Mount with digital thermostat
G) Mount with LED thermostat
H) Manual thermostat (C26 only)
I) Switch (C26 only)
J) Handle
K) 12/24 V DC – 220 V AC socket

The data plate bearing the serial number and technical data is located on the upper right-hand section, inside the refrigerator. The first three figures of the serial number indicate the year and week of manufacture.
All materials exposed to contact with food comply with EC directive 2004/1935.
Noise emission levels are maintained below 70 dB (A).

INSTALLATION

Ensure that the appliance is in no way damaged. Any damage resulting from transport must be reported to the dealer no later than 24 hours after delivery.
Handle the appliance with care. Take care when positioning the refrigerating unit (in the case of refrigerators with remote refrigerating units) to avoid breaking the connection pipelines or obstructing them in any way. Always ensure that the refrigerator and remote refrigerating unit (where supplied) are installed on a flat surface.
For built-in installation, cut two holes in the cupboard that will accommodate the refrigerator: one at the bottom next to the refrigerating unit and the second in the top or on the upper half of the side. The holes must have an area of at least 300 cm². If this is not possible, leave a gap of at least 50 mm between refrigerator top and the interior surface of the top of the cupboard (see Fig. 5).
Install the refrigerator away from heat sources in dry and well-ventilated surroundings. Leave the appliance for at least one hour before switching on. In the meantime the appliance should be cleaned for the first time.

More information https://www.caravansplus.com.au

CLEANING THE REFRIGERATOR

Before cleaning, ensure that the refrigerator is not connected to the power supply. If necessary, extract the plug from the power socket.

EXTERIOR

Clean exterior first with warm and then with cold water. Dry with a soft cloth. Avoid all use of abrasive products.

INTERIOR

Remove the racks (or basket), containers, and ice trays, and clean the interior using warm water mixed with a little bicarbonate of soda or vinegar. Rinse and dry carefully with a soft cloth. Never use abrasive products, detergents or soap.

CONDENSER

The condenser (Fig. 4) should be cleaned at least once a year using a vacuum cleaner or a dry brush.

In the case of prolonged disuse, to avoid the formation of mould or unpleasant odours, extract the plug from the socket, empty the unit completely, clean the interior, and leave the door ajar.

ELECTRICAL CONNECTION

This appliance complies with EC directive 89/336 governing radio suppression.
Before connecting the appliance to the power supply, check that the line voltage corresponds to the indications on the appliance rating plate and those of the compressor plate.

TEMPERATURE CONTROL

Each refrigerator is fitted with a thermostat, which automatically maintains set temperatures.

- **MECHANICAL THERMOSTAT**
  Select the desired temperature by means of the adjustment knob.
  When the knob is on "0" or "STOP" the refrigerator is not in operation.
  The refrigerator is started by turning the knob to "1". Temperature settings range from 1 to 5; 5 being the lowest temperature.

  For the wiring diagram, see Fig. 8e/h (12/24 V) or Fig. 9 (115 V/230 V)

More information https://www.caravansplus.com.au

Some models are fitted with thermostats with different temperature scale markings to those described above. In this case refer to Fig. 1. Decrease temperature by turning the knob clockwise.

For rational food storage and conservation refer to the table below:

Food	**Storage Time**	**Position in Refrigerator**
Cleaned meat or fish (place in plastic bags or wrapping)	2 to 3 days	On the rack under the freezer compartment
Eggs	1 month	Use door compartment
Butter, margarine	1 week	Use door compartment
Cooked food, cakes and soups (cool and place in airtight, sealed containers)	3 to 4 days	On the lowest rack in the refrigerator
Cold cuts of meat, fresh pasta, confectioners creams and custards, puddings, chocolate, cream cakes, lard, pastries, tomatoes	3 to 4 days	On any rack
Bottles		In the bottle compartment inside door
Fruit and vegetables		In the salad drawer at the bottom of the refrigerator

More information https://www.caravansplus.com.au

REPLACING THE LAMP

To replace the lamp (see fig. 2), proceed as follows:

- Remove the protective cover perpendicularly from the base. Take care not to damage the fastening pins.
- Move one of the two springs in order to be able to slide out the lamp.
- Bend the two springs lightly towards one another and insert the new lamp.
- **Make sure that the light is correctly tightened on the springs.**

Refit the cover.

REVERSING THE DOOR

To change the door opening direction on doors with PIN closure:

- Remove the top hinge and PIN closure.
- Pull the door away until it comes free of the bottom hinge.
- Remove the bottom hinge and refit it on the opposite side of the refrigerator.
- Refit the door on the bottom hinge.
- Fit the top hinge and PIN closure on the opposite side.

PANEL CHANGING

To remove and/or change the panel, proceed as follows:

- Remove the door, as indicated in the previous section.
- Loosen the screws on the lower base section and remove it.
- Remove the panel by sliding it out downwards.
- Insert a new panel in place of the old one, sliding it upwards as far as the stop. Refit the lower base section.

DEFROSTING

Defrosting should be carried out whenever the frost layer exceeds a thickness of three millimetres. This is necessary to guarantee efficient refrigeration and to avoid excessive power consumption.

To completely defrost the refrigerator turn the thermostat knob to "stop". Keep the door open to speed up defrosting time.

Do not attempt to remove the frost layer using any sharp metal instruments. This could pierce the refrigerator plate and cause irreparable damage to the appliance.

In portable absorption refrigerators, defrosting is carried out automatically. We recommend emptying the drip tray every day.

After defrosting, switch the refrigerator on by turning the thermostat knob to the desired setting.

More information https://www.caravansplus.com.au

SPECIAL WARNINGS FOR 220 V AC REFRIGERATORS

ELECTRICAL CONNECTION

The appliance must be earthed in accordance with the law.
Ensure that the earthing plant of the electrical system is in perfect working condition.
The manufacturer declines any responsibility for injury to people or damage to property caused by non-compliance with the above regulations.
Avoid the use of adaptors, multiple sockets and extension leads. If absolutely necessary, only use products that conform to current safety standards and take care not to exceed the maximum power stated in the product specifications.
If the socket and the appliance plug are incompatible, replace the socket with one of the correct type. This operation should be carried out by a qualified electrician who must ensure that the wire size of the socket is suitable for the electrical input of the appliance.

TROUBLESHOOTING

1- IF YOUR REFRIGERATOR DOES NOT WORK

Check that:
- the thermostat is not set to "Stop"
- the power supply is present
- the electrical system circuit breaker on the appliance has not tripped
- the plug is in perfect condition and is inserted properly in the socket
- the power socket functions properly. To check, connect up a similar appliance that you know functions correctly
- the power cable is not faulty.

2-EXCESS REFRIGERATOR NOISE

Check that:
- the refrigerator is standing on a completely level surface
- the refrigerator is not touching other objects which may cause vibrations
- the refrigerating circuit tubes at the back of the unit are not touching or vibrating against the appliance

3-INSUFFICIENT REFRIGERATING POWER

Check that:
- the door is sealed properly
- the refrigerator is not positioned close to heat sources
- the refrigerator and remote refrigerating unit are sufficiently ventilated
- frost has not accumulated on the evaporator
- dust has not blocked the condenser
- the fan rotates freely (in forced cooling models)
- the refrigerator is not over-full

If, after checking the above, the refrigerator still does not function, consult your nearest assistance centre.

More information https://www.caravansplus.com.au

SPECIAL WARNINGS FOR 12-24 V DC REFRIGERATORS

INSTALLATION

When installing the refrigerator in caravans, campers, motor homes etc., fit air vents communicating directly with the outside (see Fig. 6).
For installation purposes, some portable refrigerator models have a bracket to fix the refrigerator in place (see Fig. 7).

ELECTRICAL CONNECTION

For refrigerators powered at 12 or 24 V DC, we recommend connecting the systems directly to the battery, following the corresponding instructions for the Danfoss compressor supplied (see p.32 and p. 33).

Connecting power to the internal light on 12/24V DC refrigerators with remote motor:

- Connect the optional cable "D" (Code **R10777**) to the terminal board on the back of the refrigerator and to the compressor control unit. (The terminal board "A" is not polarised and therefore, the connection can be made without distinction).
- Connect the battery to the compressor control unit, **taking care to respect polarity!**

  - Terminal board for internal light connection.
  - Compressor control unit.
  - Battery.
  - Internal light power cable (supplied).

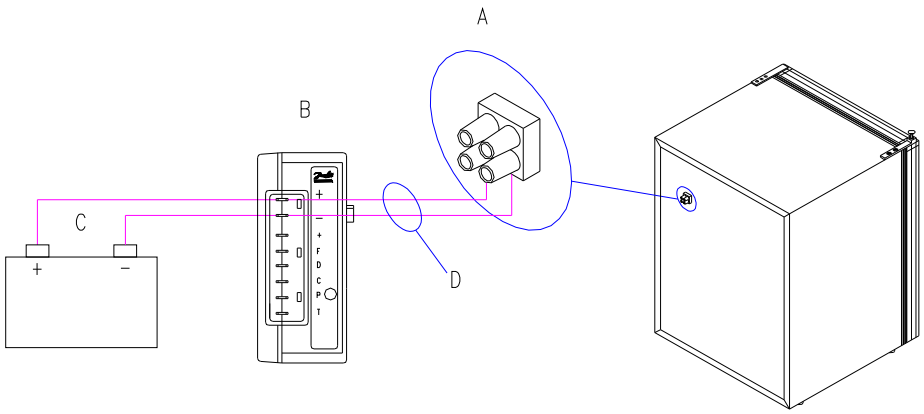

More information https://www.caravansplus.com.au

SPECIAL WARNINGS FOR 12-24Vcc 100-240Vca REFRIGERATORS

ELECTRICAL CONNECTION

We recommend connecting 12 or 24 V DC power lines directly to the battery, following the corresponding instructions for the Danfoss compressor supplied (see p. 32 and p.33).

Prepare the V AC power supply line using a three-pole cable with a minimum section per conductor of 1 sq mm, suitable insulation for the intended use and environment and compliant with the standards in force.
Connect the V AC power line using a plug/socket connection with suitable capacity compliant with the standards in force. Alternatively, it is possible to fit an omnipolar differential thermomagnetic circuit breaker with a capacity of 6 amperes and contact opening of at least 3 mm or in any case, compliant with the standards in force.
When installation is complete, check the continuity of the earth circuit and perform all of the electrical safety tests foreseen by the standards in force.
Protect the cables and lock them into place sufficiently to prevent them from disconnecting if accidentally pulled or from coming into contact with hot parts at temperatures above 50°C or with sharp parts.
Power line installation should be performed by qualified technical personnel who can check the compliance of the system with standards in force and issue the relevant conformity certification.

Connecting power to the internal light on 12/24V DC refrigerators with remote motor:

- Connect the optional cable (Code **R10777**) for inside light connection from the terminal board on the back of the refrigerator and to the control unit of the compressor, following the diagram on figure 15. (The terminal board is not polarised and therefore, the connection can be made without distinction.)

More information https://www.caravansplus.com.au

TEMPERATURE CONTROL

- **MECHANICAL THERMOSTAT**

  In the case of 12V DC or 24V DC portable absorption refrigerators, for maximum energy saving, set the thermostat to position "A" for refrigerators of maximum 75 l capacity, and to "A1" for models exceeding this capacity (Fig. 1).

- **"LED" THERMOSTAT**

  The electronic "LED" thermostat has two button controls:
  - An "ON/OFF" control
  - A temperature adjustment control "✱"

  Pressing the control marked "ON/OFF" will **switch the refrigerator on or off,** alternatively.
  To set the required temperature, press the control marked ✱. Each time this control is pressed, the LED indicator will light up from left to right; for intermediate settings, two adjacent LEDs will light up. When the LED indicator is on the left, the refrigerator is set to minimum (warmest), while a right-hand LED position indicates a reduction in temperature (cooler) of approximately 3°C. To select a cooler temperature, press the button repeatedly until the LED furthest to the right switches on (maximum cooling); if the control is pressed again, the LED furthest to the left will switch on.
  For the wiring diagram, see Fig. 8a/b/f



- **DIGITAL THERMOSTAT**

  The DIGITAL thermostat can be used to monitor the internal temperature of the refrigerator constantly as well as to switch the compressor on and off.
  The thermostat has a display and four keys, to check its status and programming.
  When first connected to the power supply, the display will begin to flash and then stop, showing the current temperature inside the refrigerator.
  The default setting for the thermostat is 0°C.

More information https://www.caravansplus.com.au

EDITING THE PARAMETERS:

- Press the **SET** key twice quickly (within 5 sec.).
  The first time, the display will read "SET" and the second time, it will show "0" or the parameter set previously.
- Use the ⩓ or ⩔ keys to change the temperature setting for the refrigerator.
- Press the **FNC** key twice quickly to confirm the new temperature setting.
  The first time, the display will read "SET" and the second time, it will show the internal temperature.
- A small dot below the word "OUT" indicates that the compressor and fan are operating.

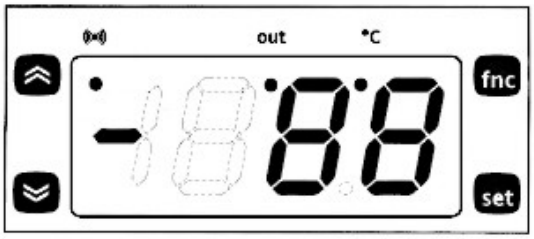

For the wiring diagram, see Fig. 8c/d/g (12/24V)

AN INSTRUCTION MANUAL FOR THE DIGITAL THERMOSTAT IS SUPPLIED WITH EACH REFRIGERATOR IN ANY CASE.

More information https://www.caravansplus.com.au

REVERSING THE DOOR

To change the door opening direction on doors with NAUTIC-EUROPA closure:

- Remove the bottom hinge and pull the door downwards.
- Take off the Nautic handle (1) and fit it back onto the door, on the opposite side, taking care to respect the distance between centres of the relevant holes.
- Unscrew the hinge pin (2) from the bracket and screw it to the other side.
- Refit the door, making sure that the closure operates effectively.
- Refit the bottom hinge on the opposite side of the refrigerator.

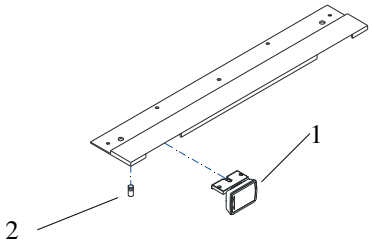

To change the door operating direction on doors with NAUTIC-USA closure:

- Remove the base of the fixing profile (1), if fitted.
- Remove the hinge and bottom plate (2) and pull the door downwards.
- Remove the Nautic handle (3), invert the stops and internal spring to change the opening movement; turn the handle grip in the direction of the arrows.
- Fit the Nautic handle back onto the door, on the opposite side, taking care to respect the distance between centres of the relevant holes.
- Move the catch plate (4) to the other side of the profile.
- Refit the door, making sure that the closure operates effectively.
- Refit the hinge, bottom plate and fixing profile base.

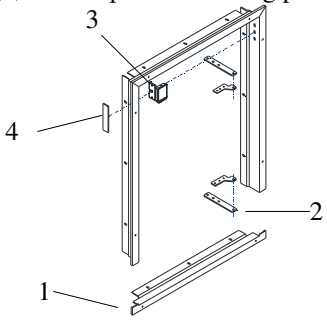

More information https://www.caravansplus.com.au

TROUBLESHOOTING

1-IF YOUR REFRIGERATOR DOES NOT WORK

Check that:

- the thermostat is not set to "STOP"
- the electrical system circuit breaker on the appliance has not tripped.
- the fuse in the electronic control unit has not blown
- the power supply cable is not faulty
- the battery is delivering sufficient power
- **the voltage on the electronic control unit terminal board corresponds to that of the battery.** If there is a voltage drop of over 0.2-0.4 V check that:
- the size of the cable connecting the battery to the electronic control unit corresponds to specifications (see table in the Danfoss instructions enclosed)
- any junction points in the power line are efficient and terminals are properly tightened.
- there are no signs of oxidisation on the battery poles and contact points

2-EXCESS REFRIGERATOR NOISE

Check that:

- the refrigerator and refrigerating unit are positioned on flat surfaces
- the refrigerator is not touching other objects that may cause vibrations
- the refrigerating circuit tubes at the back of the unit are not touching or vibrating against the appliance

3-INSUFFICIENT REFRIGERATING POWER

Check that:

- the door is sealed properly
- the refrigerator is not positioned close to heat sources
- the refrigerator and remote refrigerating unit are sufficiently ventilated
- frost has not accumulated on the evaporator
- dust has not blocked the condenser
- the fan rotates freely (in forced cooling models)
- the refrigerator is not over-full

If, after checking the above, the refrigerator still does not function, consult your nearest assistance centre.

More information https://www.caravansplus.com.au

INSTRUCTIONS FOR DANFOSS BD35/BD50F 12-24 V DC

The electronic unit is a dual voltage device. This means that the same unit can be used in both 12V and 24V power supply systems. Maximum voltage is 17V for a 12V system and 31.5V for a 24V power supply system. Max. ambient temperature is 55°C. The electronic unit has a builtin thermal protection which is actuated and stops compressor operation if the electronic unit temperature gets too high.

Installation (Fig. 10)

Connect the terminal plug from the electronic unit to the compressor terminal. Mount the electronic unit on the compressor by snapping the cover over the screw head (1).

Power supply (Fig. 10)

The electronic unit must always be connected directly to the battery poles (2). Connect the plus to + and the minus to -, otherwise the electronic unit will not work. The electronic unit is protected against reverse battery connection. For protection of the installation, a fuse (3) must be mounted in the + cable as close to the battery as possible. 15A fuse for 12V and 7.5A fuse for 24V circuits are recommended. If a main switch (4) is used, it should be rated to a current of min. 20A. The wire dimensions in Fig. 11 must be observed. Avoid extra junctions in the power supply system to prevent voltage drop from affecting the battery protection setting.

Battery protection (Fig. 10)

The compressor is stopped and re-started again according to the decided voltage limits measured on the + and - terminals of the electronic unit. The standard settings for 12V and 24V power supply systems appear from Fig. 12. Other settings (Fig. 13) are optional if a connection which includes a resistor (9) is established between terminals C and P. In solar applications without a battery a 220 kW resistor is recommended. In AEO (Adaptive Energy Optimizing) speed mode the BD compressor will always adapt its speed to the actual cooling demand within a random operation voltage of 9.6 to 31.5V.

Thermostat (Fig. 10)

The thermostat (7) is connected between the terminals C and T. Without any resistor in the control circuit, the compressor with electronic unit 101N0210 or 101N0220 will run with a fixed speed of 2,000 rpm when the thermostat is switched on. With the thermostat directly connected to terminal C the electronic unit 101N0300 will adjust its speed to the actual cooling demand. Other fixed compressor speeds in the range between 2,000 and 3,500 rpm can be obtained when a resistor (8) is installed to adjust the current (mA) of the control circuit. Resistor values for various motor speeds appear from Fig. 14.

Fan (optional, Fig. 10)

A fan (5) can be connected between the terminals + and F. Connect the plus to + and the minus to F. Since the output voltage between the terminals + and F is always regulated to 12V, a 12V fan must be used for both 12V and 24V power supply systems. The fan output can supply a continous current of 0.5Aavg. A higher current draw is allowed for 2 seconds during start.

LED (optional, Fig. 10)

A 10mA light emitting diode (LED) (6) can be connected between the terminals + and D. In case the electronic unit records an operational error, the diode will flash a number of times. The number of flashes depends on what kind of operational error was recorded. Each flash will last ¼ second. After the actual number of flashes there will be a delay with no flashes, so that the sequence for each error recording is repeated every 4 seconds.

Number of flashes	Error type
5	**Thermal cut-out of electronic unit** (If the refrigeration system has been too heavily loaded, or if the ambient temperature is high, the electronic unit will run too hot).
4	**Minimum motor speed error** (If the refrigeration system is too heavily loaded, the motor cannot maintain minimum speed 1,850 rpm).
3	**Motor start error** (The rotor is blocked or the differential pressure in the refrigeration system is too high (>5 bar)).
2	**Fan over-current cut-out** (The fan loads the electronic unit with more than $1A_{peak}$).
1	**Battery protection cut-out** (The voltage is outside the cut-out setting).

More information https://www.caravansplus.com.au

INSTRUCTIONS FOR DANFOSS BD35/BD50F 12-24 Vcc / 110-240 Vca

The electronic unit is a multi voltage device. It can be used in both 12V/24V DC and 100-240V AC 50/60Hz power supply systems. Max. voltage is 17V DC for a 12V DC system and 31.5V DC for a 24V DC power supply system. Max. voltage is 265V AC and min. 85V AC for an AC power supply system. Max. ambient temperature is 55°C. The electronic unit has a builtin thermal protection which is actuated and stops the compressor operation if the electronic unit temperature becomes too high (100°C / 212°F on the PCB). **Power consumption is limited to 100W. See datasheet BD50F for details.**

Installation (Fig. 1)

Connect the terminal plug from the electronic unit to the compressor terminal. Mount the electronic unit on the compressor by snapping the cover over the screw head (1).

Power supply (Fig. 1)

DC: The electronic unit must always be connected directly to the battery poles (2). Connect the plus to + and the minus to -, otherwise the electronic unit will not work. The electronic unit is protected against reverse battery connection. For protection of the installation, a fuse (3) must be mounted in the + cable as close to the battery as possible. It is recommended to use 15A fuses for 12V and 7.5A fuses for 24V circuits. If a main switch (4) is used, it should be rated to a current of min. 20A. The wire dimensions in Fig. 2 must be observed. Avoid extra junctions in the power supply system to prevent voltage drop from affecting the battery protection setting.

AC: The wires must be connected to the terminals marked L and N on the electronic unit. Nominal voltages from 100 to 240 VAC 50/60Hz. Upper safety cut-out limit = 270V AC and lower limit 80V AC. A 4A fuse (11) must be mounted in the live (L) cable to protect the installation. If a main switch (12) is used, it should be rated to a current of min. 6A. The wire dimensions must be min. 0.75 mm2 or AWG 18. NB: Earth connection can be used if required.

General: Both the AC and the DC power supply can be connected to the electronic unit at the same time. In this case, AC will be preferred power supply source. If the AC power supply is disconnected or drop below 85V AC on a 12V DC supply system, a time delay of 1 min. will be activated before the compressor continues on DC power supply. If AC power supply is re-established there will be no delay in compressor operation.

Battery protection (Fig. 1)

The compressor is stopped and re-started again according to the decided voltage limits measured on the + and - terminals of the electronic unit. The standard settings for 12V and 24V power supply systems appear from Fig. 3. Other settings are optional if a connection which includes a resistor (9) is established between terminals C and P. See manual.

Thermostat (Fig. 1)

The thermostat (7) is connected between the terminals C and T. Without any resistor in the control circuit, the compressor will run with a fixed speed of 2,000 rpm when the thermostat is switched on. Other fixed compressor speeds in the range between 2,000 and 3,500 rpm can be obtained when a resistor (8) is installed to adjust the current (mA) of the control circuit. Resistor values for various motor speeds appear from Fig. 5.

Fan (optional, Fig. 1)

A fan (5) can be connected between the terminals + and F. Connect the plus to + and the minus to F. Since the output voltage between the terminals + and F is always regulated to 12V, **a 12V fan must be used for both 12V and 24V power supply systems.** The fan output can supply a continuous current of 0.5Aavg. A higher current draw is allowed for 2 seconds during start.

Lamp (optional, Fig. 1)

A 12V DC 5 Watt lamp (10) can be connected between the terminals A and C. The output voltage between the terminals A and C is always regulated to 12V DC. **A 12V DC lamp must be used for both 12V and 24V power supply systems**.The lamp output can supply a continuous current of 0.5Aavg.

LED (optional, Fig. 1)

A 10mA light emitting diode (LED) (6) can be connected between the terminals + and D. If the electronic unit records an operational error, the diode will flash a number of times. The number of flashes depends on what kind of operational error was recorded. Each flash will last ¼ second. After the actual number of flashes there will be a delay with no flashes, so that the sequence for each error recording is repeated every 4 seconds.

More information https://www.caravansplus.com.au

fig.1

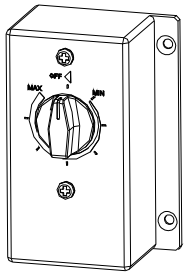

Type A

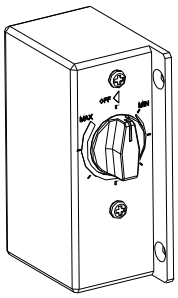

Type B

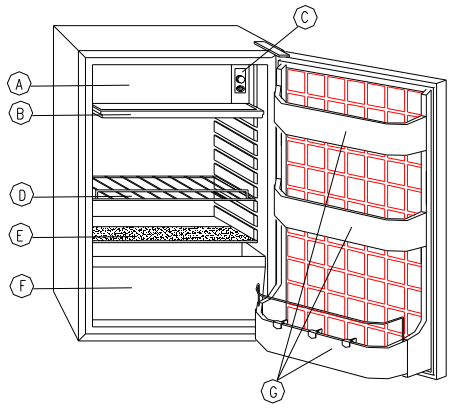

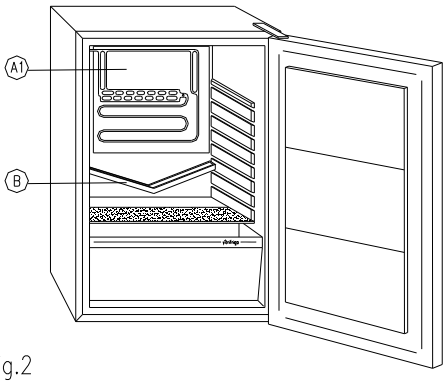

fig.2

fig.3

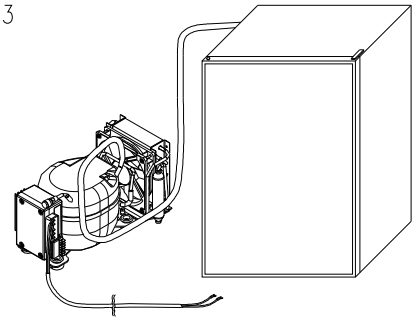

More information https://www.caravansplus.com.au

fig.4

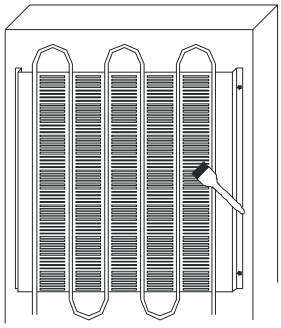

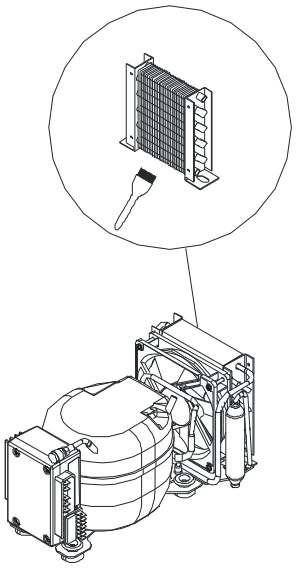

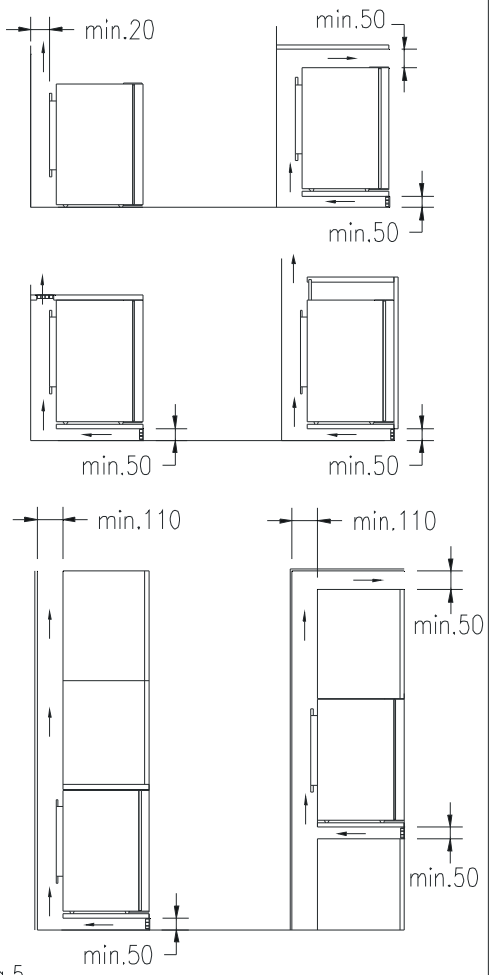

fig.5

fig.6

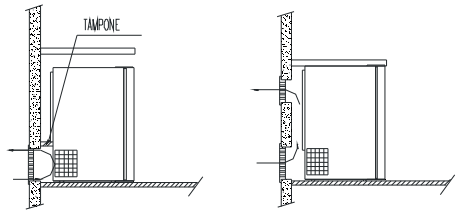

More information https://www.caravansplus.com.au

fig.7a

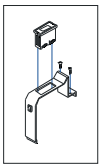

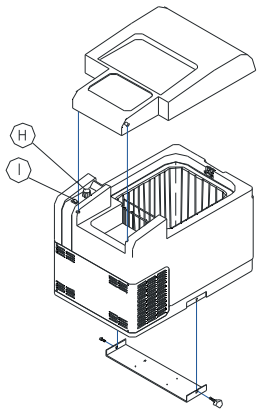

fig.7b

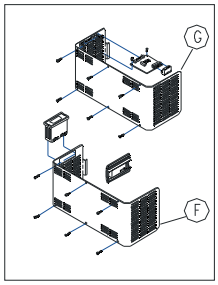

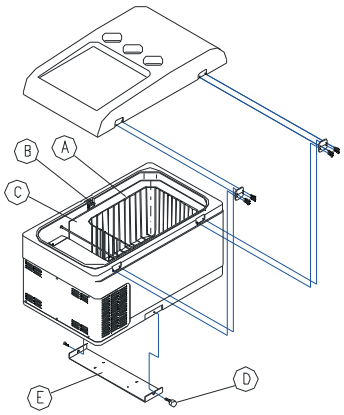

fig.7c

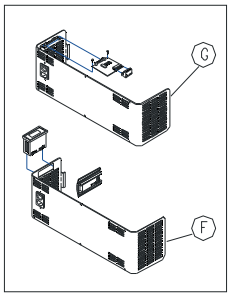

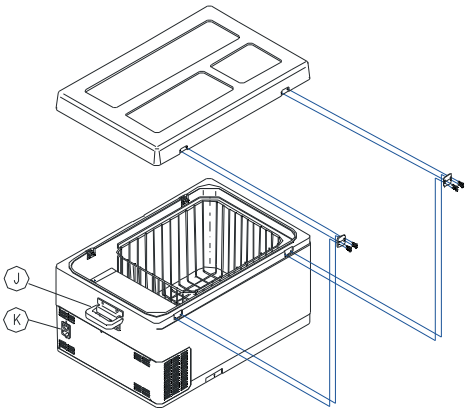

More information https://www.caravansplus.com.au

fig.8a

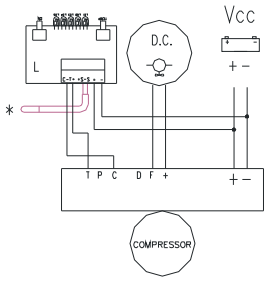

fig.8b

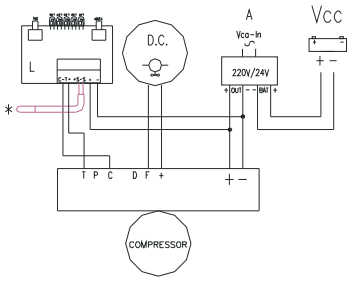

fig.8c

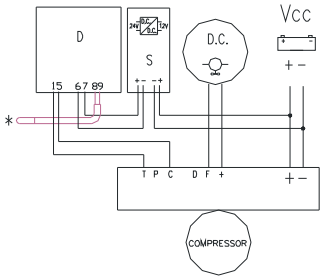

fig.8d

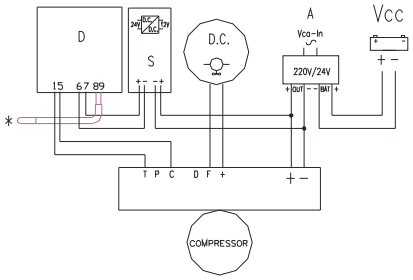

fig.8e

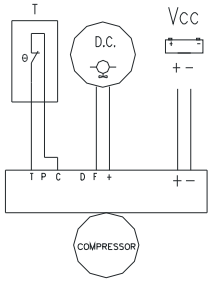

fig.8f

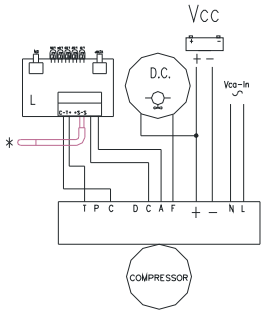

More information https://www.caravansplus.com.au

fig.8g

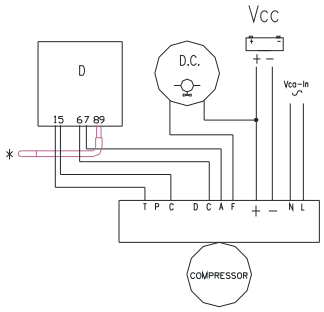

fig.8h

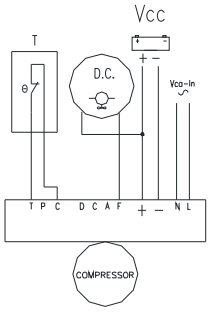

fig.9

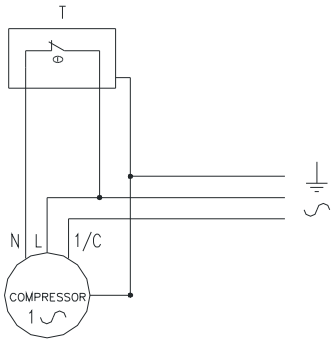

More information https://www.caravansplus.com.au

Fig.10

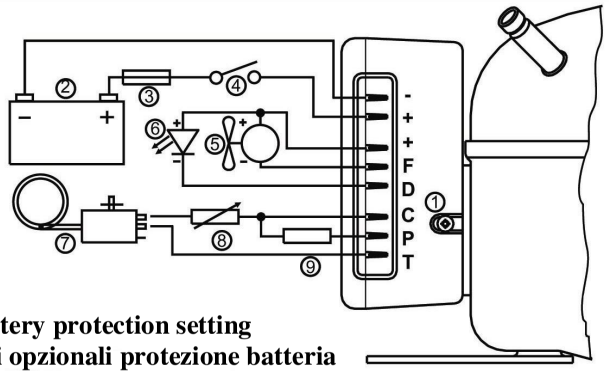

Optional battery protection setting
Impostazioni opzionali protezione batteria

Resistor (9) kΩ	12V cut-out V	12V cut-in V	12V max. Voltage	24V cut-out V	24Vcut-in V	24V max Voltage
Resistore (9) kΩ	12V stacco V	12V attacco V	Max tensione a 12V	24V stacco V	24V attacco V	Max tensione A 24V
0	9.6	10.9	17.0	21.3	22.7	31.5
1.6	9.7	11.0	17.0	21.5	22.7	31.5
2.4	9.9	11.1	17.0	21.8	22.9	31.5
3.6	10.0	11.3	17.0	22.0	23.2	31.5
4.7	10.1	11.4	17.0	22.3	23.4	31.5
6.2	10.2	11.5	17.0	22.5	23.7	31.5
8.2	10.4	11.7	17.0	22.8	23.9	31.5
11	10.5	11.8	17.0	23.0	24.2	31.5
14	10.6	11.9	17.0	23.3	24.5	31.5
18	10.8	12.0	17.0	23.6	24.7	31.5
24	10.9	12.2	17.0	23.8	25.0	31.5
33	11.0	12.3	17.0	241	25.2	31.5
47	11.1	12.4	17.0	24.3	25.5	31.5
82	11.3	12.5	17.0	24.6	25.7	31.5
220	9.6	10.9			26.0	31.5

Fig.13

Wire dimensions
Dimensioni cavi (Fig.11)

Cross section mm²	Max length* m 12V operation	Max length* m 24V operation
Sezione mm²	Max. lunghezza* m funzionamento a 12V	Max. lunghezza* m funzionamento a 12V
2.5	2.5	5
4	4	8
6	6	12
10	10	20

Lenght between battery and electronic unit
Lunghezza tra la batteria e l'unità elettronica

Standard battery protection setting
Impostazioni standard protezione batteria (Fig.12)

12V cut-out V	12V cut-in V	24V cut-out V	24V cut-in V
12V stacco V	12V attacco V	24V stacco V	24V attacco V
10.4	11.7	22.8	24.2

Compressor speed
Velocità compressore (Fig.14)

Resistor (8) Ω	Motor speed rpm	Contr.Circ. Current mA
Resistore (8) Ω	Velocità motore giri/min	Corrente circuito controllo mA
0	2000	5
277	2500	4
692	3000	3
1523	3500	2

More information https://www.caravansplus.com.au

Fig.15

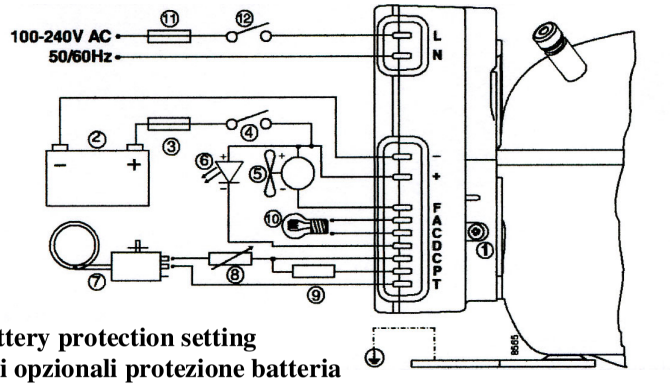

Optional battery protection setting
Impostazioni opzionali protezione batteria

Resistor (9) kΩ	12V cut-out V	12V cut-in V	12V max. Voltage	24V cut-out V	24Vcut-in V	24V max Voltage
Resistore (9) kΩ	12V stacco V	12V attacco V	Max tensione a 12V	24V stacco V	24V attacco V	Max tensione A 24V
0	9.6	10.9	17.0	21.3	22.7	31.5
1.6	9.7	11.0	17.0	21.5	22.7	31.5
2.4	9.9	11.1	17.0	21.8	22.9	31.5
3.6	10.0	11.3	17.0	22.0	23.2	31.5
4.7	10.1	11.4	17.0	22.3	23.4	31.5
6.2	10.2	11.5	17.0	22.5	23.7	31.5
8.2	10.4	11.7	17.0	22.8	23.9	31.5
11	10.5	11.8	17.0	23.0	24.2	31.5
14	10.6	11.9	17.0	23.3	24.5	31.5
18	10.8	12.0	17.0	23.6	24.7	31.5
24	10.9	12.2	17.0	23.8	25.0	31.5
33	11.0	12.3	17.0	241	25.2	31.5
47	11.1	12.4	17.0	24.3	25.5	31.5
82	11.3	12.5	17.0	24.6	25.7	31.5
220	9.6	10.9			26.0	31.5

Fig.18

Wire dimensions
Dimensioni cavi (Fig.16)

Cross section mm²	Max length* m 12V operation	Max length* m 24V operation
Sezione mm²	Max. lunghezza* m funzionamento a 12V	Max. lunghezza* m funzionamento a 12V
2.5	2.5	5
4	4	8
6	6	12
10	10	20

Lenght between battery and electronic unit
Lunghezza tra la batteria e l'unità elettronica

Wire dimension AC/Dimensioni cavi AC
Cross section / Sezione : min. 0.75 mm²

Standard battery protection setting
Impostazioni standard protezione batteria (Fig.17)

12V cut-out V	12V cut-in V	24V cut-out V	24V cut-in V
12V stacco V	12V attacco V	24V stacco V	24V attacco V
10.4	11.7	22.8	24.2

Compressor speed
Velocità compressore (Fig.19)

Resistor (8) Ω	Motor speed rpm	Contr.Circ. Current mA
Resistore (8) Ω	Velocità motore giri/min	Corrente circuito controllo mA
0	2000	5
277	2500	4
692	3000	3
1523	3500	2

More information https://www.caravansplus.com.au

DICHIARAZIONE DI CONFORMITA'
La VITRIFRIGO srl con sede in via della Produzione 9, 61020 Montecchio (PS), Italia,
DICHIARA
sotto la propria responsabilità che il frigorifero o unità refrigerante per la refrigerazione ed il mantenimento di cibi e bevande i cui dati sono riportati nell'etichetta sottostante ed alla quale questa dichiarazione si riferisce
E' CONFORME
ai requisiti essenziali di sicurezza previsti dalle direttive:
2006/95/CEE 2004/108/CEE.

DECLARATION OF CONFORMITY
VITRIFRIGO srl, with it main office in via della Produzione 9, 61020 Montecchio (PS), Italy,
hereby DECLARES,
under its sole responsibility, that the refrigerator or refrigerating unit designed for the refrigeration and preservation of food and beverages, as per the dataplate indicated below and to which this declaration refers,
COMPLIES WITH THE
basic safety requirements specified in EC directives:
2006/95/EC EC/2004/108.

DÉCLARATION DE CONFORMITÉ
La soussignée société VITRIFRIGO srl, dont le siège est à Montecchio (PS) - 61020 (ITALIE), via della Produzione 9,
ATTESTE
sous sa responsabilité que le réfrigérateur ou unité de réfrigération et de conservation d'aliments et de boissons, dont les caractéristiques sont reportées sur l'étiquette ci-dessous et objet de la présente déclaration est
CONFORME
aux exigences essentielles des directives:
2006/95/CEE 2004/108/CEE.

KONFORMITÄTSERKLÄRUNG
Die Firma VITRIFRIGO srl mit Sitz in Via della Produzione 9, 61020 Montecchio (PS), Italien
ERKLÄRT
in eigener Verantwortung, dass der Kühlschrank bzw. das Kühlgerät für die Kühlung und Aufbewahrung von Speisen und Getränke, dessen Daten auf nachstehendem Etikett angegeben sind, und auf das sich diese Erklärung bezieht,
von folgenden Richtlinien vorgeschriebenen Sicherheitsanforderungen:
2006/95/EWG 2004/108/EWG
KONFORM IST.

DECLARACIÓN DE CONFORMIDAD
La VITRIFRIGO srl, con domicilio en via della Produzione n° 9, 61020 Montecchio (Pésaro), Italia,
DECLARA,
bajo su propia responabilidad, que el frigorífico o unidad refrigerante para la refrigeración y conservación de alimentos y bebidas - cuyos datos técnicos se indican en la etiqueta situada debajo, al que la presente declaración se refiere,
CUMPLE CON
los requisitos esenciales de seguridad establecidos por las directivas:
2006/95/CE 2004/108/CE.

DECLARAÇÃO DE CONFORMIDADE
A VITRIFRIGO srl, com sede na Via della Produzione n° 9 - 61020 - Montecchio (PS), Itália
DECLARA
sob a própria responsabilidade que o frigorifero ou unidade refrigerante á refrigeraçã e conservação de alimentos e bebidas, cujos dados estão contidos na etiqueta abaixo e a qual esta declaração concerne
É CONFORME
aos requisitos essenciais de segurança previstos pelas directivas:
2006/95/CE 2004/108/CE.

CONFORMITEITSVERKLARING
De firma VITRIFRIGO srl, gevestigd in de via della Produzione 9, 61020 Montecchio (PS), Italië,
VERKLAART,
onder eigen verantwoording, dat de koelkast of de koeleenheid voor het koelen en bewaren van voedingswaren en dranken, waarvan de gegevens op onderstaand etiket zijn vermeld en waarop deze verklaring betrekking heeft,
VOLDOET
aan de fundamentele vereisten zoals gedefinieerd in de richtlijnen:
2006/95/EEG 2004/108/EEG.

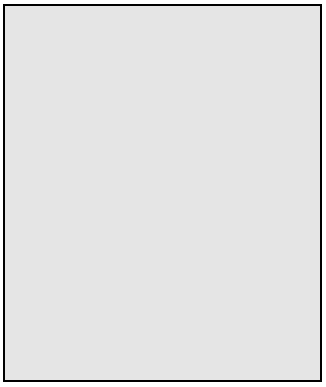

Vitri Alceste

More information https://www.caravansplus.com.au