

Refrigerator

[en] User manual

K431..

Table of contents

Safety 3
General information 3
Intended use 3
Restriction on user group 3
Safe transport 4
Safe installation 4
Safe use 5
Damaged appliance 7

Preventing material damage 9

Environmental protection and saving energy 9
Disposing of packaging 9
Saving energy 9

Installation and connection 10
Scope of delivery 10
Installing and connecting the appliance 10
Criteria for the installation location 10
Preparing the appliance for the first time 11
Connecting the appliance to the electricity supply 11

Familiarising yourself with your appliance 12
Appliance 12
Controls 13

Features 13
Shelf 14
Pull-out container 14
Fruit and vegetable container with cover 14
Door racks 14
Accessories 14

Basic operation 15
Switching on the appliance 15
Operating tips 15
Switching off the appliance 15
Setting the temperature 15

Refrigerator compartment 15
Tips for storing food in the refrigerator compartment 15
Chill zones in the refrigerator compartment 16
Cooling capacity 16
"OK" sticker 16

Defrosting 16
Defrosting in the refrigerator compartment 16

Cleaning and servicing 16
Preparing the appliance for cleaning 16
Cleaning the appliance 17
Cleaning the condensation channel and drainage hole 17
Cleaning the ventilation grille 17
Removing the fittings 18

Troubleshooting 19
Malfunctions 19
Noise 21
Odours 21

Storage and disposal 22
Switching off the appliance 22
Disposing of old appliance 22

Customer Service 22
Product number (E-Nr.) and production number (FD) 23

Technical data 23

Safety

Please read the safety information to ensure that you use the appliance safely.
This appliance complies with the relevant safety regulations for electrical appliances and is fitted with noise suppression.

General information

You can find general information about this instruction manual here.

- Read this instruction manual carefully. Only this will ensure you use the appliance safely and efficiently.
- This manual is intended for the user of the appliance.
- Follow the safety instructions and warnings.
- Keep the instruction manual and the product information safe for future reference or for the next owner.
- Check the appliance after unpacking it. Do not connect the appliance if it has been damaged in transit.

Intended use

Read the information on intended use to ensure that you use the appliance correctly and safely.
Only use this appliance:

- As specified in this instruction manual.
- For chilling food.
- In private households and in enclosed spaces in a domestic environment.
- Up to an altitude of max. 2000 m above sea level.

Restriction on user group

Avoid risks to children and vulnerable persons.
This appliance may be used by children aged 8 or over and by people who have reduced physical, sensory or mental abilities or inadequate experience and/or knowledge, provided that they are supervised or have been instructed on how to use the appliance safely and have understood the resulting dangers.

Children must not play with the appliance.
Cleaning and user maintenance must not be performed by children unless they are being supervised.
Keep children under the age of 8 years away from the appliance and power cable.
Children above the age of three years old and younger than eight years old may load and unload the the fridge-freezer.

Safe transport

Follow these safety instructions when transporting the appliance.

⚠ **WARNING – Risk of injury!**
The high weight of the appliance may result in injury when lifted.
- ▶ Do not lift the appliance on your own.

Safe installation

Follow these safety instructions when installing the appliance.

⚠ **WARNING – Risk of electric shock!**
Improper installation is dangerous.
- ▶ Connect and operate the appliance only in accordance with the specifications on the rating plate.
- ▶ Connect the appliance to a power supply with alternating current only via a properly installed socket with earthing.
- ▶ The protective conductor system of the domestic electrical installation must be properly installed.
- ▶ Never equip the appliance with an external switching device, e.g. a timer or remote control.
- ▶ When the appliance is installed, the mains plug of the power cord must be freely accessible. If free access is not possible, an all-pole isolating switch must be installed in the permanent electrical installation according to the installation regulations.
- ▶ When installing the appliance, check that the power cable is not trapped or damaged.

⚠ **WARNING – Risk of fire!**

- It is dangerous to use an extended power cord and non-approved adapters.
  - ▶ Do not use extension cables or multiple socket strips.
  - ▶ If the power cord is too short, contact Customer Service.
  - ▶ Only use adapters approved by the manufacturer.
- 

  Portable multiple socket strips or portable power supply units may overheat and cause a fire.
  - ▶ Do not position portable multiple socket strips or portable power supply units behind the appliance.

Safe use

Follow these safety instructions when using the appliance.

⚠ **WARNING – Risk of electric shock!**

- If the insulation of the power cord is damaged, this is dangerous.
  - ▶ Never let the power cord come into contact with hot appliance parts or heat sources.
  - ▶ Never let the power cord come into contact with sharp points or edges.
  - ▶ Never kink, crush or modify the power cord.
- An ingress of moisture can cause an electric shock.
  - ▶ Only use the appliance in enclosed spaces.
  - ▶ Never expose the appliance to intense heat or humidity.
  - ▶ Do not use steam- or high-pressure cleaners to clean the appliance.

⚠ **WARNING – Risk of suffocation!**

- Children may put packaging material over their heads or wrap themselves up in it and suffocate.
  - ▶ Keep packaging material away from children.
  - ▶ Do not let children play with packaging material.

- Children may breathe in or swallow small parts, causing them to suffocate.
  - ▶ Keep small parts away from children.
  - ▶ Do not let children play with small parts.

⚠ WARNING – Risk of explosion!

- Electrical devices within the appliance may explode (e.g. heaters or electric ice makers).
  - ▶ Do not operate electrical devices within the appliance.
- Mechanical devices or other devices may damage the refrigeration circuit; flammable refrigerant may escape and explode.
  - ▶ To accelerate the defrosting process, do not use any other mechanical devices or devices other than those recommended by the manufacturer.
- Products which contain flammable propellants and explosive substances may explode, e.g. spray cans.
  - ▶ Do not store products which contain flammable propellants (e.g. spray cans) or explosive substances in the appliance.

⚠ WARNING – Risk of fire!

The vapours from flammable liquids may catch fire (explosion).

- ▶ Store high-percentage alcohol tightly closed and standing up.

⚠ WARNING – Risk of injury!

- Injury to the eyes caused by escaping flammable refrigerant and hazardous gases.
  - ▶ Do not damage the pipes of the refrigerant circuit or the insulation.
- The appliance may tip.
  - ▶ Do not stand or support yourself on the base, runners or doors.

⚠ WARNING – Risk of burns!

Individual parts of the appliance become hot during operation.

- ▶ Never touch these hot parts.

- ▶ Keep children at a safe distance.

⚠ **CAUTION – Risk of harm to health!**
To prevent food from being contaminated, you must observe the following instructions.

- ▶ If the door is open for an extended period of time, this may lead to a considerable temperature increase in the compartments of the appliance.
- ▶ Regularly clean the surfaces that may come into contact with food and accessible drain systems.
- ▶ Store raw meat and fish in suitable containers in the refrigerator so that they do not touch or drip on other food.
- ▶ If the fridge/freezer is empty for an extended period of time, switch off the appliance, defrost it, clean it and leave the door open to prevent the formation of mould.

Damaged appliance

Follow the safety instructions if your appliance is damaged.

⚠ **WARNING – Risk of electric shock!**

- If the appliance or the power cord is damaged, this is dangerous.
  - ▶ Never operate a damaged appliance.
  - ▶ Never operate an appliance with a cracked or fractured surface.
  - ▶ Call Customer Service. → *Page 22*
  - ▶ Repairs to the appliance should only be carried out by trained specialist staff.
- Improper repairs are dangerous.
  - ▶ Repairs to the appliance should only be carried out by trained specialist staff.
  - ▶ Only use genuine spare parts when repairing the appliance.
  - ▶ If the power cord of this appliance is damaged, it must be replaced by the manufacturer, the manufacturer's Customer Service or a similarly qualified person in order to prevent any risk.

⚠ WARNING – Risk of fire!



If the tubes are damaged, flammable refrigerant and harmful gases may escape and ignite.

- ▶ Keep naked flames and ignition sources away from the appliance.
- ▶ Ventilate the room.
- ▶ Switch off the appliance. → *Page 15*
- ▶ Unplug the appliance from the mains or switch off the circuit breaker in the fuse box.
- ▶ Call after-sales service. → *Page 22*

Preventing material damage

Follow these instructions to prevent material damage to your appliance, accessories or other objects in your kitchen.

ATTENTION!

- Contamination with oil or fat may cause plastic parts and door seals to become porous.
  - ▸ Keep plastic parts and door seals free of oil and grease.
- Using the base, runners or appliance doors as a seat surface or climbing surface may damage the appliance.
  - ▸ Do not stand or support yourself on the base, runners or doors.

Environmental protection and saving energy

Help protect the environment by using your appliance in a way that conserves resources and by disposing of reusable materials properly.

Disposing of packaging

The packaging materials are environmentally compatible and can be recycled.

- ▸ Sort the individual components by type and dispose of them separately.

  Information about current disposal methods are available from your specialist dealer or local authority.

Saving energy

If you follow these instructions, your appliance will use less power.

Selecting the installation location

Follow these instructions when installing your appliance.

- Keep the appliance out of direct sunlight.
- Install the appliance as far away as possible from heating elements, cookers and other heat sources:
  - – Maintain a 30 mm clearance to electric or gas cookers.
  - – Maintain a 30 cm clearance to oil or solid-fuel cookers.

+ The appliance needs to cool less frequently at low ambient temperatures.

- Do not cover or block ventilation openings.
- Ventilate the room daily.

+ The air on the back wall of the appliance does not warm up so intensely.
  The appliance must cool less frequently.

Saving energy during use

Follow these instructions when using your appliance.

Note: The arrangement of the fittings does not affect the energy consumption of the appliance.

- Do not cover or block ventilation openings.

+ The air on the back wall of the appliance does not warm up so intensely.

- Open the appliance door only briefly.
- Transport purchased food in a cool bag and place in the appliance quickly.
- Allow warm food and drinks to cool down before placing them in the appliance.
- Thaw frozen food in the refrigerator compartment to utilise the low temperature of the food.

+ The air in the appliance does not warm up so intensely.
The appliance must cool less frequently.

- Always leave some space between the food and to the back panel.
- Pack the food airtight.

+ The air can circulate and the air humidity remains constant.

Installation and connection

Scope of delivery

After unpacking all parts, check for any transport damage and check the completeness of the delivery.
If you have any complaints, contact your dealer or our after-sales service → *Page 22*.

The delivery consists of the following:
- Built-under appliance
- Equipment and accessories[1]
- Installation material
- Installation instructions
- Operating instructions
- Customer service booklet
- Warranty enclosure[2]
- Energy label
- Product data sheet
- Information on the energy consumption and noises

Installing and connecting the appliance

Requirement: The scope of delivery of the appliance is checked.
→ *Page 10*

1. Observe the criteria for the appliance's installation location.
→ *Page 10*
2. Install the appliance in accordance with the enclosed installation instructions.
3. Prepare the appliance for first use.
→ *Page 11*
4. Electrically connect the appliance.
→ *Page 11*

Criteria for the installation location

Follow these instructions when installing your appliance.

⚠ **WARNING**
Risk of explosion!
If the appliance is in a space that is too small, a leak in the refrigeration circuit may result in a flammable mixture of gas and air.
- ▸ Only install the appliance in a space with a volume of at least 1 m^3 per 8 g refrigerant. The volume of refrigerant is indicated on the rating plate. → *"Appliance", Fig.* **1**/4, *Page 12*

The weight of the appliance ex works may be up to 35 kg depending on the model.

[1] Depending on the appliance specifications

[2] Not in all countries

The subfloor must be of sufficient stability to bear the weight of the appliance.

Permitted room temperature

The permitted room temperature depends on the appliance's climate class.
The climate class can be found on the rating plate. → *"Appliance", Fig.* **1**/4, *Page 12*

Climate class	Permitted room temperature
SN	10 °C to 32 °C
N	16 °C to 32 °C
ST	16 °C to 38 °C
T	16 °C to 43 °C

The appliance is fully functional within the permitted room temperature.
If an appliance with climate class SN is operated at colder room temperatures, the appliance will not be damaged up to a room temperature of 5 °C.

Built-under

Attachment under certain worktops, e.g. stone, glass or stainless steel, is frequently not possible. You can order accessories from customer service for installation on the side walls.
→ *"Customer Service", Page 22*

Preparing the appliance for the first time

1. Remove the informative material.
2. Remove the protective foil and transit bolts, e.g. remove the adhesive strips and carton.
3. Clean the appliance for the first time. → *Page 17*

Connecting the appliance to the electricity supply

1. Insert the mains plug of the appliance's power cable in a socket nearby.

   The connection data of the appliance can be found on the rating plate. → *"Appliance", Fig.* **1**/4, *Page 12*
2. Check the mains plug is inserted properly.

✔ The appliance is now ready for use.

Familiarising yourself with your appliance

Familiarise yourself with the parts of your appliance.

Appliance

You can find an overview of the parts of your appliance here.

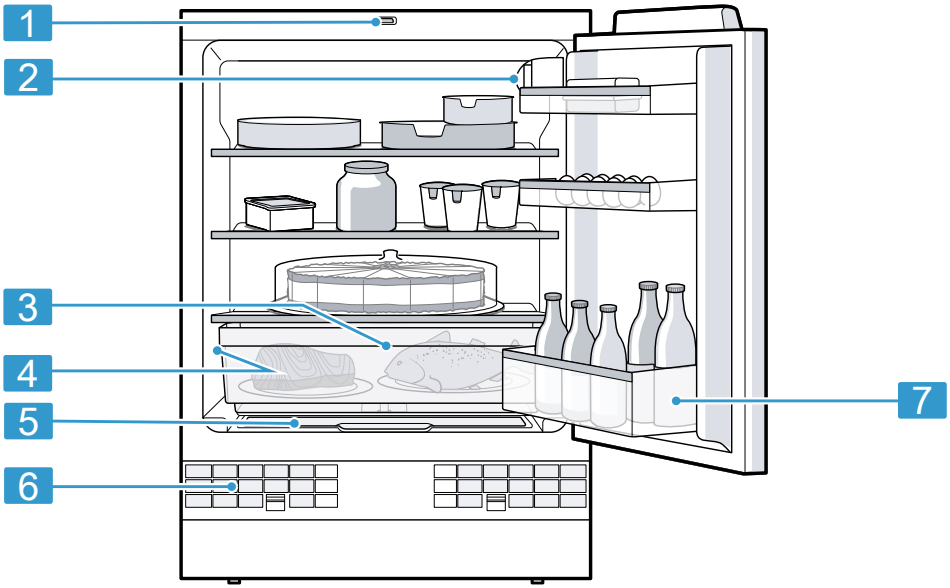

1

1	Light switch	3	Pull-out container
2	Controls	4	Rating plate

5	Fruit and vegetable container
6	Ventilation grille
7	Door storage compartment for large bottles

Note: Deviations between your appliance and the diagrams may differ with regard to their features and size.

Controls

The controls are used to configure all functions of your appliance and to obtain information about the operating status.

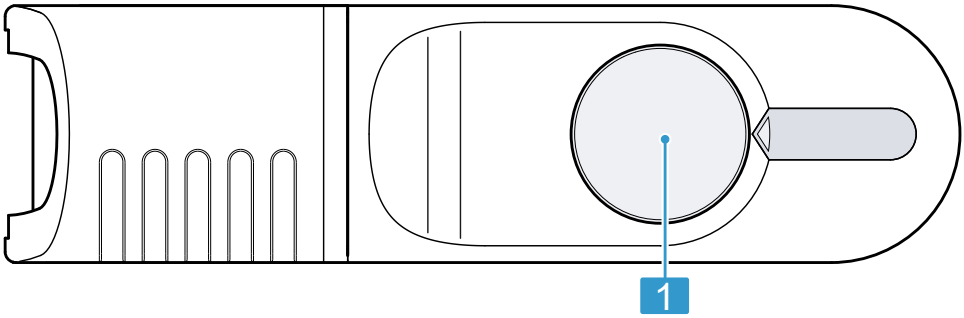

2

1	The temperature controller sets the temperature.

Features

Here you can see an overview of the features of your appliance and their use.
The features of your appliance depend on the model.

Shelf

To vary the shelves as required, remove the shelf and re-insert it elsewhere.
→ *"Removing the shelf", Page 18*

Pull-out container

Do not store animal-based food in the pull-out container. You can take out the pull-out container for loading and unloading. → *Page 18*

Fruit and vegetable container with cover

Store fresh fruit and vegetables in the fruit and vegetable container.
Remove the fruit and vegetable container loading and unloading.
→ *Page 18*
Condensation may form in the fruit and vegetable container depending on the food and quantity stored.
Remove the condensation with a dry cloth.
To ensure that the quality and aroma are retained, store fruit and vegetables that are sensitive to cold outside of the appliance at temperatures of approx. 8 °C to 12 °C.

Fruit that is sensitive to cold	■ Pineapples ■ Bananas ■ Mangoes ■ Papayas ■ Citrus fruits
Vegetables that are sensitive to cold	■ Aubergines ■ Gherkins ■ Courgettes ■ Peppers ■ Tomatoes ■ Potatoes

Door racks

To adjust the door racks as required, remove the door rack and re-insert elsewhere.
→ *"Removing door racks", Page 18*

Accessories

Only use original accessories. These have been made especially for your appliance. Here you can find an overview of your appliance's accessories and how to use them.
The accessories for your appliance depend on the model.

Egg tray

Store eggs safely on the egg tray.

Bottle holder

The bottle holder prevents bottles from falling over when the appliance door is opened and closed.

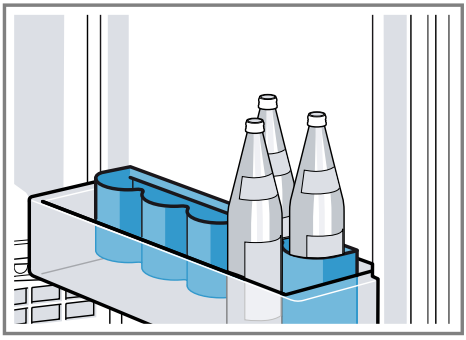

Basic operation

You can find out everything you need to know about operating your appliance here.

Switching on the appliance

1. Turn the temperature controller from position "0".
✔ The appliance begins to cool.
2. Set the required temperature.
→ *Page 15*

Operating tips

- Once you have switched on the appliance, the set temperature is only reached after several hours. Do not put in any food in the appliance until the temperature is reached.
- If you open the refrigerator compartment door frequently, put large quantities of food in the appliance or if the room temperature is high, the temperature of the refrigerator compartment rises.

Switching off the appliance

▸ Turn the temperature controller to position "0".
✔ The appliance stops cooling.

Setting the temperature

After you have switched on the appliance, you can set the temperature.

Setting the refrigerator compartment temperature

▸ Turn the temperature controller to the required setting.

When the controller is at a medium setting, the temperature drops to approx. 4 °C in the coldest zone.
→ *""OK" sticker", Page 16*

Refrigerator compartment

You can keep meat, sausage, fish, dairy products, eggs, ready meals and pastries in the refrigerator compartment.
The temperature can be set from setting 1 to setting 5.
When the controller is at a medium setting, the temperature drops to approx. 4 °C in the coldest zone.
→ *""OK" sticker", Page 16*
The refrigerator compartment can also be used to store highly perishable foods in the short to medium term. The lower the selected temperature, the longer the food remains fresh.

Tips for storing food in the refrigerator compartment

Follow the tips if you store food in your refrigerator compartment.

- To ensure that the freshness and quality of the food is retained for longer, only store fresh and unspoiled food.
- In the case of ready-made products and bottled goods, do not exceed the best-before date or use-by date specified by the manufacturer.
- To retain aroma, colour and freshness or to prevent taste transfer and discolouration of the plastic parts, store food well wrapped or covered.
- Leave warm food and beverages to cool down before placing them in the refrigerator compartment.

Chill zones in the refrigerator compartment

The air circulation in the refrigerator compartment creates different chill zones.

Coldest zone

The coldest zone is in the pull-out container.

Warmest zone

The warmest zone is at the very top of the door.

Tip: Store food that does not spoil easily in the warmest zone, e.g. hard cheese and butter. Cheese can then continue to release its aroma and the butter will still be easy to spread.

Cooling capacity

The temperature in the refrigerator compartment may rise temporarily if loaded with fairly larger amounts of food or drinks.

Tip: Turn the temperature controller to a higher setting for approx. seven hours.
→ *"Setting the refrigerator compartment temperature", Page 15*

"OK" sticker

The "OK" sticker lets you check whether the refrigerator compartment reaches the safe temperature ranges of +4 °C or colder recommended for food.
The "OK" sticker is not included with all models.
If the sticker does not indicate "OK", gradually reduce the temperature.
→ *"Setting the refrigerator compartment temperature", Page 15*
Once the appliance is switched on, it may take up to 12 hours until the set temperature is reached.



Correct setting

Defrosting

Observe the information when you want to defrost your appliance.

Defrosting in the refrigerator compartment

When the appliance is operating, condensation droplets or frost form on the rear panel of the refrigerator compartment due to functional reasons. The back panel in the refrigerator compartment defrosts automatically.
Condensation or frost run through the condensation channel into the drainage hole to the evaporation pan and do not have to be wiped away.
To ensure that the condensation can drain and odours do not form, observe the following information:
→ *"Cleaning the condensation channel and drainage hole", Page 17*.

Cleaning and servicing

To keep your appliance working efficiently for a long time, it is important to clean and maintain it carefully.

Preparing the appliance for cleaning

Find out how to prepare your appliance for cleaning.

1. Switch off the appliance.
   → *Page 15*
2. Disconnect the appliance from the power supply.

Unplug the appliance from the mains or switch off the circuit breaker in the fuse box.

3. Take out all of the food and store it in a cool location.

   Place ice packs (if available) onto the food.

4. Remove all fittings from the appliance. → *Page 18*

Cleaning the appliance

Clean the appliance as specified to ensure that it is not damaged by incorrect cleaning or unsuitable cleaning products.

⚠ WARNING
Risk of electric shock!

- An ingress of moisture can cause an electric shock.
  - ▸ Do not use steam- or high-pressure cleaners to clean the appliance.
- Liquid in the lighting can be dangerous.
  - ▸ The rinsing water must not run into the light.

ATTENTION!

- Unsuitable cleaning products may damage the surfaces of the appliance.
  - ▸ Do not use hard scouring pads or cleaning sponges.
  - ▸ Do not use harsh or abrasive detergents.
  - ▸ Do not use cleaning products with a high alcohol content.
- If you clean fittings and accessories in the dishwasher, this may cause them to become deformed or discolour.
  - ▸ Never clean shelves or containers in the dishwasher.

1. Prepare the appliance for cleaning. → *Page 16*
2. Clean the appliance, the fittings and the door seals clean with a dish cloth, lukewarm water and a little pH-neutral washing-up liquid.
3. Dry thoroughly with a soft, dry cloth.
4. Insert the fittings.
5. Electrically connect the appliance. → *Page 11*
6. Switch on the appliance. → *Page 15*
7. Putting the food into the appliance.

Cleaning the condensation channel and drainage hole

Regularly clean the condensation channel and drainage hole to ensure that the condensation can drain.

1. Remove the pull-out container. → *"Removing pull-out containers", Page 18*
2. Carefully clean the condensation channel and the drainage hole, e.g. using a moistened cotton bud.

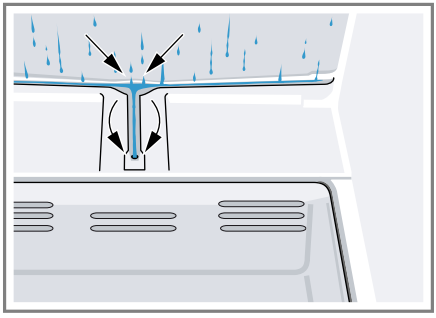

Cleaning the ventilation grille

1. Remove the ventilation grille for cleaning.
   - – To do this, depress the clips in the ventilation openings and simultaneously remove the ventilation grille forwards.

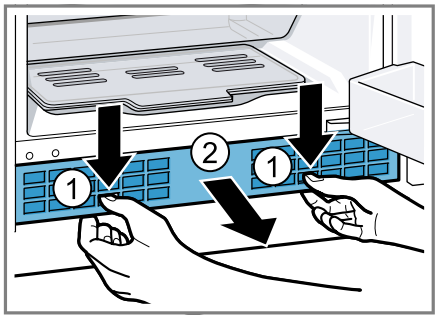

2. Clean the ventilation grille with lukewarm soapy water and a dish cloth.
3. Let the ventilation grille dry completely and insert it.

Removing the fittings

If you want to clean the fittings thoroughly, remove these from your appliance.

Removing the shelf

▸ Lift the shelf, pull it out, lower it and swing it out to the side.

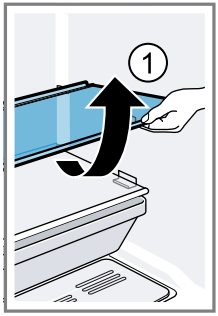

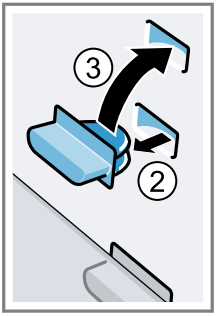

Removing door racks

▸ Lift the door rack upwards and remove it.

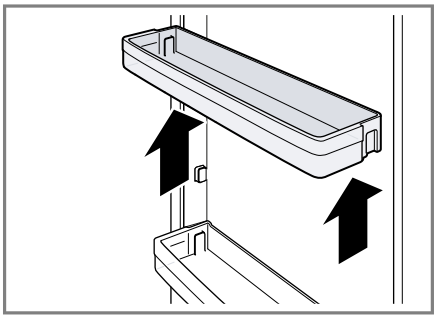

Removing pull-out containers

▸ Lift the container and pull it out.

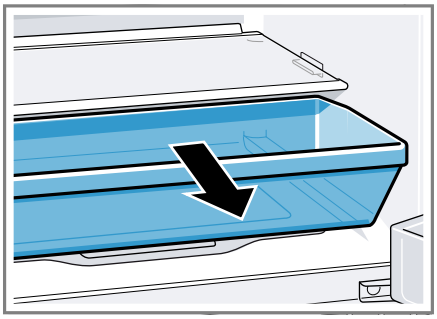

Remove the fruit and vegetable container with the lid

1. Lift the container with the lid.
2. Remove the container to the front.

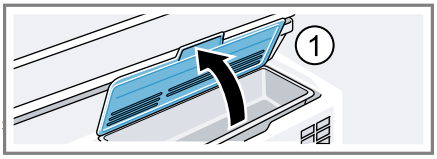

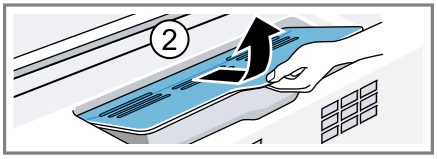

Troubleshooting

You can rectify minor faults on your appliance yourself. Read the troubleshooting information before contacting after-sales service. This will avoid unnecessary costs.

⚠ WARNING
Risk of electric shock!
Improper repairs are dangerous.
- ▶ Repairs to the appliance should only be carried out by trained specialist staff.
- ▶ Only use genuine spare parts when repairing the appliance.
- ▶ If the power cord of this appliance is damaged, it must be replaced by the manufacturer, the manufacturer's Customer Service or a similarly qualified person in order to prevent any risk.

Malfunctions

Errors	Cause	Troubleshooting
The appliance is not working.	The mains plug has not been inserted properly.	▶ Connect the mains plug.
No displays light up.	Fuse has been tripped.	▶ Check the fuses.
	The power has failed.	1. Check whether the power is on. 2. Place ice packs (if available) on the top shelf.

Errors	Cause	Troubleshooting
The lighting does not work.	The illuminant is defective.	1. Switch off the appliance. → *Page 15* 2. Disconnect the appliance from the mains. Unplug the appliance from the mains or switch off the circuit breaker in the fuse box. 3. Slide the cover grille forwards and remove it. 4. Replace the illuminant. Replacement illuminant: 220–240 V AC, E14 bulb holder, see the defective illuminant'ss wattage. 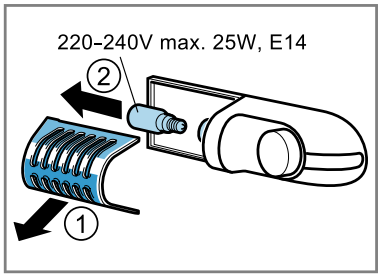
	The light switch is jammed.	▶ Check whether the light switch can be moved. 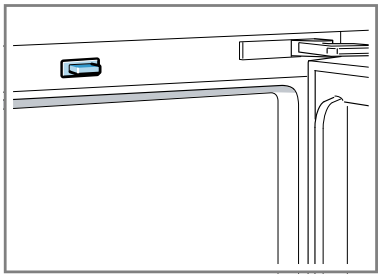
The refrigeration unit is switching on more frequently and for longer.	The appliance door was opened frequently.	▶ Do not open appliance door unnecessarily.
	The ventilation openings are covered up.	▶ Remove any obstructions from in front of the ventilation openings.
The base of the refrigerator compartment is wet.	The condensation channel or drainage hole are blocked.	▶ Clean the condensation channel and the drainage hole. → *Page 17*

Noise

Errors	Cause	Troubleshooting
Appliance has a humming sound.	Not a fault. A motor is running, e.g. refrigerating unit, fan.	No action required.
The appliance bubbles, buzzes or gargles.	Not a fault. Refrigerant flows through the pipes.	No action required.
The appliance clicks.	Not a fault. Motor, switches or solenoid valves are switching on or off.	No action required.
The appliance makes noises.	The appliance is not level.	▶ Align the appliance using a spirit level. If required, place something underneath it.
	Fittings wobble or stick.	▶ Check the removable fittings and, if required, replace these.
	Bottles or containers are touching.	▶ Move the bottles or containers away from each other.

Odours

Errors	Cause	Troubleshooting
The appliance has an unpleasant smell.	Different causes are possible.	1. Prepare the appliance for cleaning. → *Page 16* 2. Clean the appliance. → *Page 17* 3. Clean all food packaging. 4. To prevent odours from forming, store strong smelling food in airtight containers. 5. After 24 hours, check whether odours are still forming.

Storage and disposal

You can find out here how to prepare your appliance for storage. You will also find out how to dispose of old appliances.

Switching off the appliance

1. Switch off the appliance. → *Page 15*
2. Disconnect the appliance from the power supply.

   Unplug the appliance from the mains or switch off the circuit breaker in the fuse box.
3. Defrost the appliance. → *Page 16*
4. Clean the appliance. → *Page 17*
5. Leave the appliance door open.

Disposing of old appliance

Valuable raw materials can be reclaimed by recycling.

⚠ WARNING
Risk of harm to health!
Children can lock themselves in the appliance, thereby putting their lives at risk.
- ▸ Leave shelves and containers inside the appliance to prevent children from climbing in.
- ▸ Keep children away from the redundant appliance.

- ▸ Dispose of the appliance in an environmentally friendly manner.



This appliance is labelled in accordance with European Directive 2012/19/EU concerning used electrical and electronic appliances (waste electrical and electronic equipment - WEEE). The guideline determines the framework for the return and recycling of used appliances as applicable throughout the EU.

Customer Service

If you have any queries, are unable to rectify faults on the appliance yourself or if your appliance needs to be repaired, contact Customer Service. You can solve many problems yourself by consulting the information on troubleshooting in these instructions or on our website. If this is not the case, contact our Customer Service. We will always find an appropriate solution and try to avoid unnecessary visits being made by a Customer Service technician.
With any warranty claims we will make sure that your appliance is repaired by trained Customer Service technicians using genuine spare parts, including after the manufacturer's warranty has expired.
For safety reasons repairs to the appliance should only be carried out by trained specialist staff. The warranty claim becomes void if repairs or interventions have been carried out by persons not authorised by us for that purpose or if our appliances have been fitted with spare, supplementary or accessory parts that were not genuine parts and then resulted in a defect.
Function-relevant genuine spare parts according to the corresponding Ecodesign Order can be obtained from Customer Service for a period of at

least 10 years from the date on which your appliance was placed on the market within the European Economic Area.

Note: Under the terms of the manufacturer's warranty applicable to the location the use of Customer Service is free of charge. The minimum duration of the warranty (manufacturer's warranty for private consumers) in the European Economic Area is 2 years (except for Denmark and Sweden, where it is 1 year) according to the terms of warranty applicable to the location. The terms of warranty do not affect other rights or claims held by yourself under local legislation.

Detailed information about the warranty period and terms of warranty in your country are available from Customer Service, your dealer or our website.
When contacting Customer Service, you will need the product number (E-Nr.) and the production number (FD) of your appliance.
The contact details for Customer Service can be found in the enclosed Customer Service directory or on our website.

Product number (E-Nr.) and production number (FD)

The product number (E-Nr.) and the production number (FD) can be found on the rating plate of the appliance.
→ *"Appliance", Fig.* **1**/4, *Page 12*
Make a note of your appliance's details and the Customer Service telephone number to find them again quickly.

Technical data

Refrigerant, cubic capacity and further technical specifications can be found on the rating plate.
→ *"Appliance", Fig.* **1**/4, *Page 12*
More information about your model can be found online at https://www.bsh-group.com/energylabel[1].
This web address is linked to the official EU EPREL product database. At the time of printing its web address had not yet been published. Please then follow the instructions on searching for models. The model identifier is made up of the characters before the slash in the product number (E-Nr.) on the rating plate. Alternatively you can also find the model identifier in the first line of the EU energy label.

[1] Only applies to countries in the European Economic Area



REGISTER YOUR PRODUCT
ONLINE NEFF-HOME.COM

Constructa-Neff Vertriebs-GmbH
Carl-Wery-Straße 34
81739 München
GERMANY

9001471213
en
991009