MARVEL

OWNER'S GUIDE & SERVICE MANUAL

MARVEL UNDERCOUNTER REFRIGERATION



Model: MLRI224-IS01A

WELCOME

Welcome to the Marvel Experience!

Thank you for choosing our quality American-built product to add to your home. We are thrilled to welcome you to our growing community of Marvel owners, who trust in our products and our support.

The information in this guide is intended to help you install and maintain your new Marvel undercounter model to protect and prolong its lifetime. We encourage you to contact our Technical Support team at (616) 754-5601 with any questions.

Got a Marvelous Design?

We would love to see how your Marvel product looks in its new home. You can send us photos of your installed product at marketing@marvelrefrigeration.com, and we might feature your Marvel home design on our website and social media!

Warranty Registration

It is important you register your product warranty after taking delivery of your appliance. You can register online at www.marvelrefrigeration.com.

The following information will be required when registering your appliance:
Serial Number
Date of Purchase
Dealer's Name and Address

Online registration available at marvelrefrigeration.com

The serial number can be found on the serial plate which is located inside the cabinet on the left side near the top.

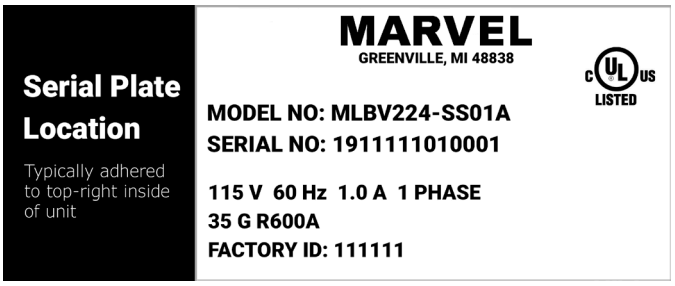

TABLE OF CONTENTS

Tip: Click on any section below to jump directly there

Safety

- Important Safety Instructions

Installation

- Unpacking Your Appliance
- Electrical
- Cutout & Product Dimensions
- Installing Your Appliance
- Side-by-Side & Stacking Installations
- Door Reversal
- Integrated Panel Dimensions
- Integrated Panel Installation
- Installing The Water Supply

Maintenance

- Care and Cleaning
- Stainless Steel Maintenance
- Extended Non-Use

Operating Instructions

- Using Your Electronic Control
- Ice Maker Operation
- Interior Adjustments
- Energy Savng Tips

Service

- Obtaining Service
- Troubleshooting
- Wire Diagram
- Product Liability
- Parts List
- Ordering Replacement Parts
- R600a Specifications
- System Diagnosis Guide
- Compressor Specifications
- Troubleshooting Extended
- Control Operation - Service
- Service Mode
- Thermistor
- Defrost
- Remove Fan and Cover
- Replace Ice Maker
- Warranty

Important Safety Instructions

Warnings and safety instructions appearing in this guide are not meant to cover all possible conditions and situations that may occur. Common sense, caution and care must be exercised when installing, maintaining or operating this appliance.

Recognize Safety Symbols, Words and Labels

⚠ WARNING

WARNING - You can be killed or seriously injured if you do not follow these instructions.

⚠ CAUTION

CAUTION - Hazards or unsafe practices which could result in personal injury or property/product damage.

NOTE

NOTE - Important information to help assure a problem-free installation and operation.

⚠ WARNING

State of California Proposition 65 Warning:
This product contains one or more chemicals known to the State of California to cause birth defects or other reproductive harm.

⚠ WARNING

State of California Proposition 65 Warning:
This product contains one or more chemicals known to the State of California to cause cancer.

⚠ WARNING

WARNING - This unit contains R600a (isobutane) which is a flammable hydrocarbon. It is safe for regular use. Do not use sharp objects to expedite defrosting. Do not damage refrigerant circuit.

UNPACKING YOUR APPLIANCE

⚠ WARNING

EXCESSIVE WEIGHT HAZARD

Use two or more people to move product.
Failure to do so can result in personal injury.

Remove Interior Packaging

Your appliance has been packed for shipment with all parts that could be damaged by movement securely fastened. Remove internal packing materials and any tape holding internal components in place. The getting started guide is shipped inside the product in a plastic bag along with the warranty registration card and other accessory items.

Important

Keep your carton and packaging until your appliance has been thoroughly inspected and found to be in good condition. If there is any damage, the packaging will be needed as proof of damage in transit. Afterwards, please dispose of all items responsibly.

⚠ WARNING

WARNING - Dispose of the plastic bags which can be a suffocation hazard.

Note to Customer

This merchandise was carefully packed and thoroughly inspected before leaving out facility. Responsibility for its safe delivery was assumed by the retailer upon acceptance of the shipment. Claims for loss or damage sustained in transit must be made to the retailer.

NOTE

DO NOT RETURN DAMAGED MERCHANDISE TO THE MANUFACTURER - FILE THE CLAIM WITH THE RETAILER.

⚠ CAUTION

If the appliance was shipped, handled or stored in other than an upright position for any period of time, allow the appliance to sit upright for a period of at least 24 hours before plugging in. This will assure oil returns to the compressor. Plugging the appliance in immediately may cause damage to internal parts.

⚠ WARNING

WARNING - Help Prevent Tragedies

Child entrapment and suffocation are not problems of the past. Junked or abandoned refrigerators are still dangerous, even if they sit outside for “just a few hours”.

If you are getting rid of your old refrigerator, please follow the instructions below to help prevent accidents.

Before you throw away your old refrigerator or freezer:

- Take off the doors or remove the drawers.
- Leave the shelves in place so children may not easily climb inside.

ELECTRICAL

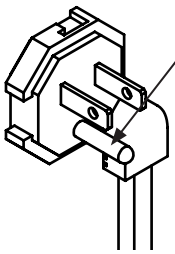

Electrical Connection

A grounded 115 volt, 15 amp dedicated circuit is required.

This product is factory equipped with a power supply cord that has a three-pronged, grounded plug. It must be plugged into a mating grounding type receptacle in accordance with the National Electrical Code and applicable local codes and ordinances. If the circuit does not have a grounding type receptacle, it is the responsibility and obligation of the customer to provide the proper power supply. The third-ground prong should not, under any circumstances, be cut or removed.

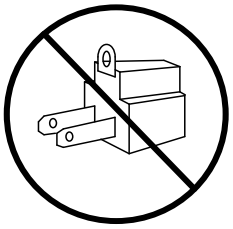

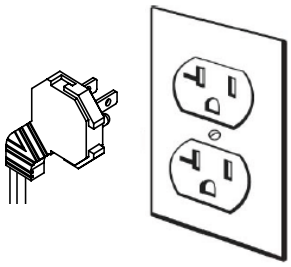

NOTE

Ground Fault Circuit Interrupters (GFCI) are prone to nuisance tripping which will cause the appliance to shut down. GFCI's are generally not used on circuits with power equipment that must run unattended for long periods of time, unles required to meet local building codes and ordinances.

⚠ WARNING

Electrical Shock Hazard

- Do not use an extension cord with this appliance. They can be hazardous and can degrade product performance.
- This appliance should not, under any
- circumstances, be installed to an un-grounded
- electrical supply. Do not remove the grounding prong from the power cord.
- Do not use an adapter.
- Do not splash or spray water from a hose on the appliance. Doing so may cause an electrical shock, which may result in severe injury or death.

CUTOUT & PRODUCT DIMENSIONS

ROUGH-IN OPENING DIMENSIONS			CABINET DIMENSIONS					
"A"	"B"	"C"	"D"	"E"	"F"	"G"	"H"	"J"
24" (61 cm)	34" to 35" (86.4 cm to 88.9 cm)	24" (61 cm)	23 ⅞" (60.7 cm)	33 ¾" to 34 ¾" (85.7 cm to 88.3 cm)	22 ⅞" (58.1 cm)	-	46 ½" (118.1 cm)	-

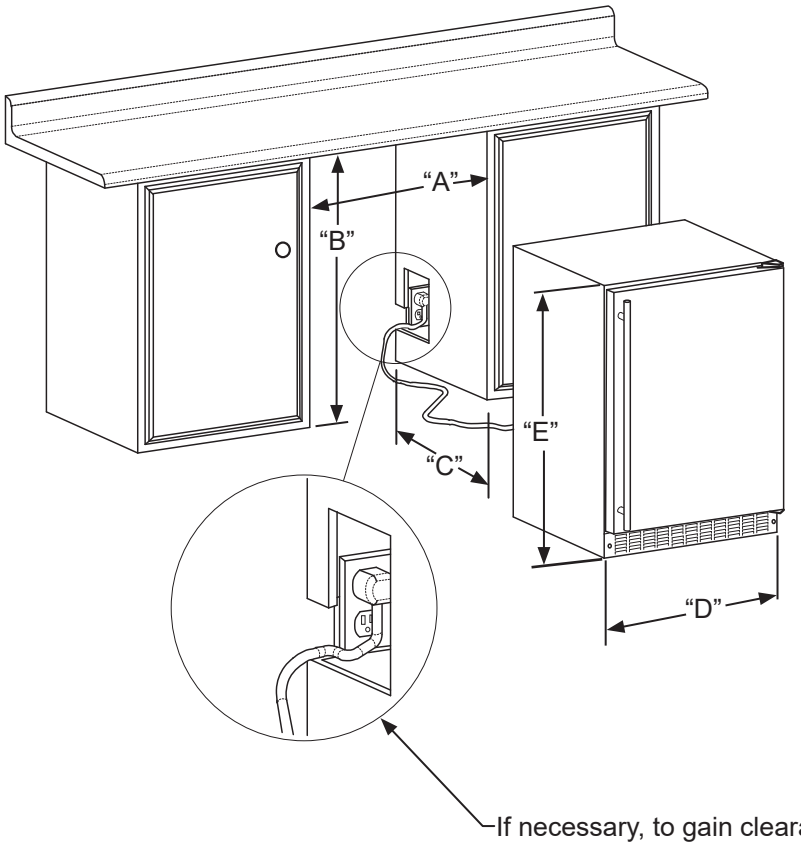

Solid Door Shown



If necessary, to gain clearance inside the rough-in opening, a hole can be cut through the adjacent cabinet and the power cord routed through this hole to a power outlet. Another way to increase the available opening depth is to recess the power outlet into the rear wall to gain the thickness of the power cord plug. Not all recessed outlet boxes will work for this application as they are too narrow, but a recessed outlet box equivalent to Arlington #DVFR1W us recommended for this application.

CUTOUT & PRODUCT DIMENSIONS

PRODUCT DATA	
ELECTRICAL REQUITEMENTS #	PRODUCT WEIGHT
115V/60Hz/15A	140 lbs (63.6 kg)

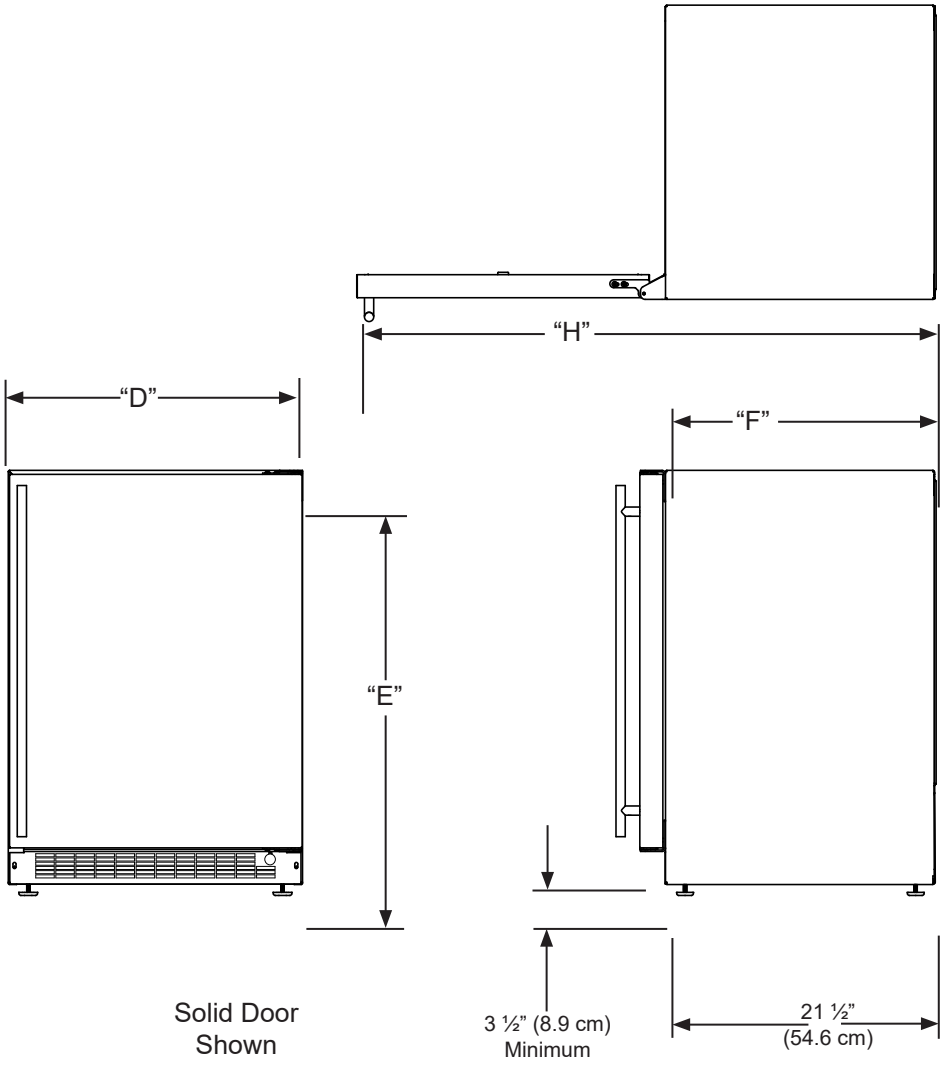

Minimum rough-in opening is required to be larger than the adjusted height of the cabinet.

A grounded 15-amp dedication circuit us required. Follow all local building codes when installing electrical and appliance.

Select Location

The proper location will ensure peak performance of your appliance. We recommend a location where the unit will be out of direct sunlight and away from heat sources. To ensure your product performs to specifications, the recommended installation location temperature range is from 55°F to 100°F (13°C to 38°C).

Cabinet Clearance

Ventilation is required from the bottom front of the appliance. Keep this area open and clear of any obstructions. Adjacent cabinets and counter top can be installed around the appliance as long as the front grille remains unobstructed.

⚠ WARNING

An optional stacking kit, for 24" wide models, is required to stack products. Failure to use a stacking kit could result in personal injury. Contact your dealer or Marvel customer service at 616-754-5601 to order. For safety concerns 15" wide models should not be stacked.

⚠ CAUTION

Front Grille

Do not obstruct the front grille. The openings within the front grille allow air to flow through the condenser heat exchanger. Restrictions to this air flow will result in increased energy usage and loss of cooling capacity. For this reason it is important this area to not be obstructed and the grille openings kept clean. Marvel does not recommend the use of a custom made grille as air flow may be restricted.

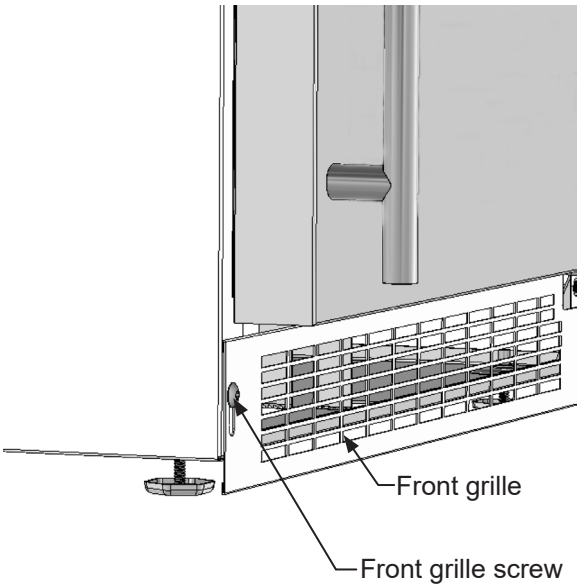

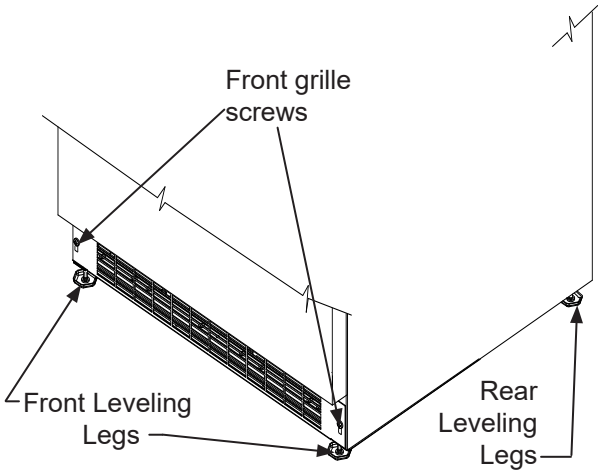

Leveling Legs

Adjustable legs at the front and rear corners of the appliance should be set so the unit is firmly positioned on the floor and level from side to side and front to back. The overall height of your Marvel appliance may be adjusted higher (by turning the leveling leg out, CCW) and lower (by turning the leveling leg in, CW).

To adjust the leveling legs, place the appliance on a solid surface and protect the floor beneath the legs to avoid scratching the floor. With the assistance of another person, lean the appliance back to access the front leveling legs. Raise or lower the legs to the required dimension by turning the legs. Repeat this process for the rear by tilting the appliance forward using caution. On a level surface check the appliance for levelness and adjust accordingly.

The front grille screws may be loosened and the grille adjusted to the desired height. When adjustment is complete tighten the two front grille screws.

Side-by-Side Installation

Other Site Requirements

Units must operate from separate, properly grounded electrical receptacles places according to each unit's electrical specification requirements.

To ensure unobstructed door swing (opening both doors at the same time), ¼" (6.4 mm) of space needs to be maintained between the units.

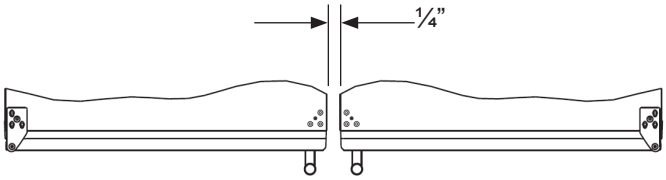

Hinge-by-Hinge Installation (Mullion)

When installing two units hinge-by-hinge, 13⁄16" (22 mm) is required for integrated models. Additional space may be needed for any knobs, pulls or handles installed.

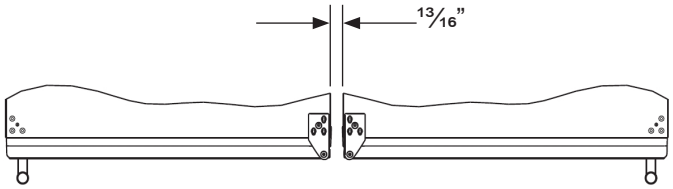

Stainless steel models which include the standard stainless handle will require 4 9⁄16" (116 mm) to allow both doors to open to 90° at the same time.

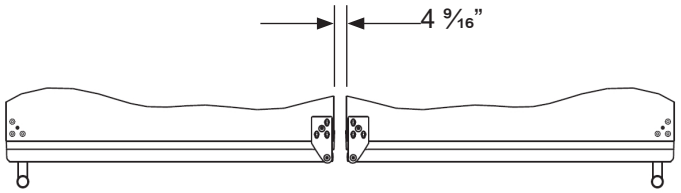

Hinge-by-Wall Installation

When installing a unit hinge-by-wall or adjacent cabinetry, 7⁄16" (11 mm) is required for integrated models. Additional space may be needed for any knobs, pulls or handles installed.

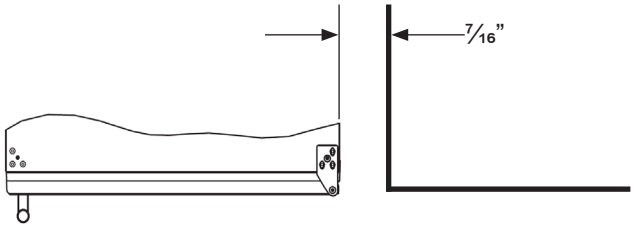

DOOR REVERSAL

Door Reversing Instructions

Tools Needed:

- **⅛" Hex Key**
- **5⁄32" Hex Key**
- **Phillips Screwdriver**

1. Open door and remove hinge pin from the upper hinge using a ⅛" hex key tool, making sure to steady the door. Slowly remove the door from the upper hinge and lift to remove off the base lower hinge.
2. Using a phillips screwdriver, remove the 6 screws from both the upper and lower hinges and save for later steps.
3. Once the hinges are removed from the unit, using a phillips screwdriver, remove the bushing screw and hinge pin screw and save for later steps.
4. On the bottom hinge, reattach the bushing screw and hinge pin screw to the opposite side.

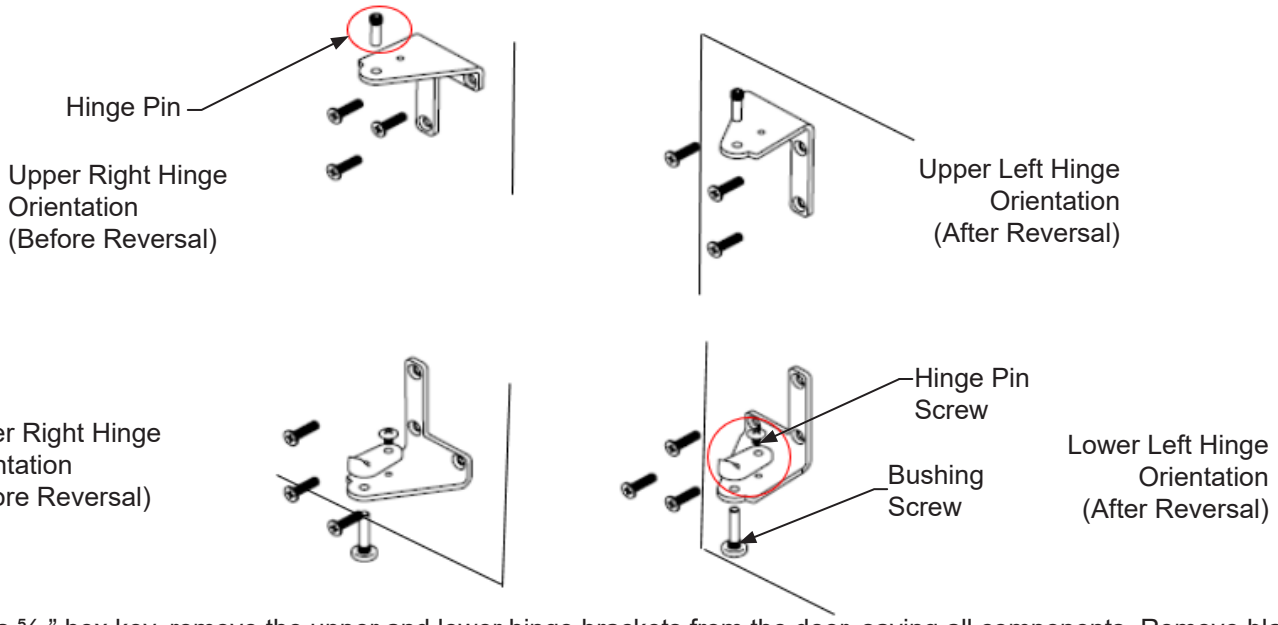

5. Using a 5⁄32" hex key, remove the upper and lower hinge brackets from the door, saving all components. Remove black plugs from opposite side of door. Flip the upper hinge bracket and reattach the hinge bushing and screw into place on the opposite side of the door (where plugs were removed). Remove the cam closer from the lower hinge bracket and attach it to the opposite side.

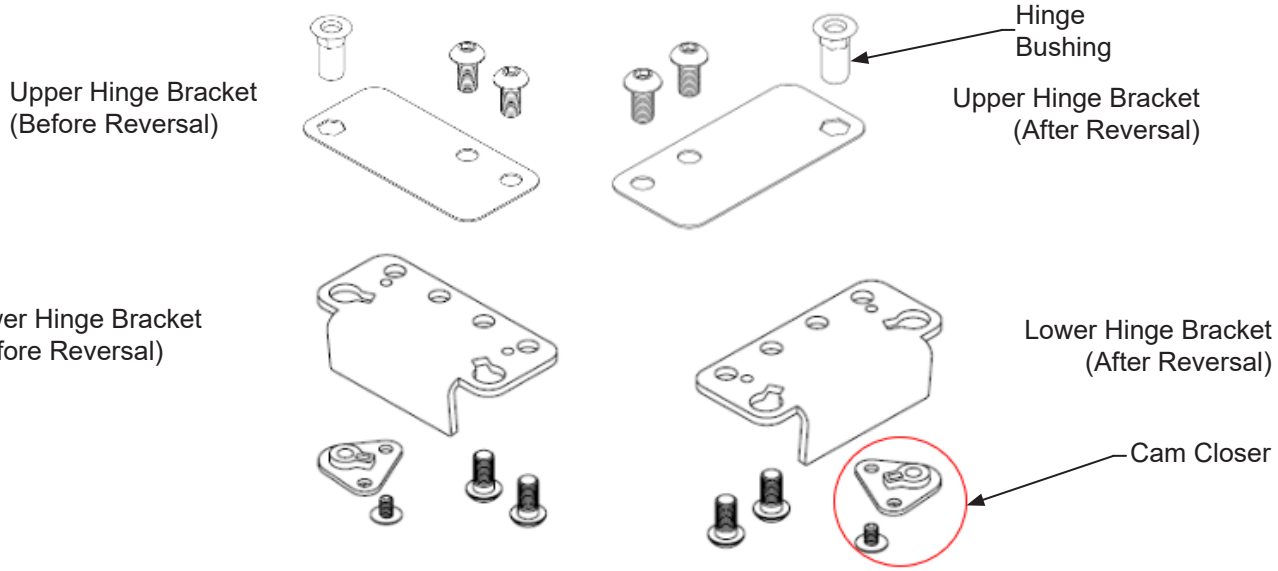

DOOR REVERSAL

6. Remove the toe kick from the door and attach it to the opposite side.

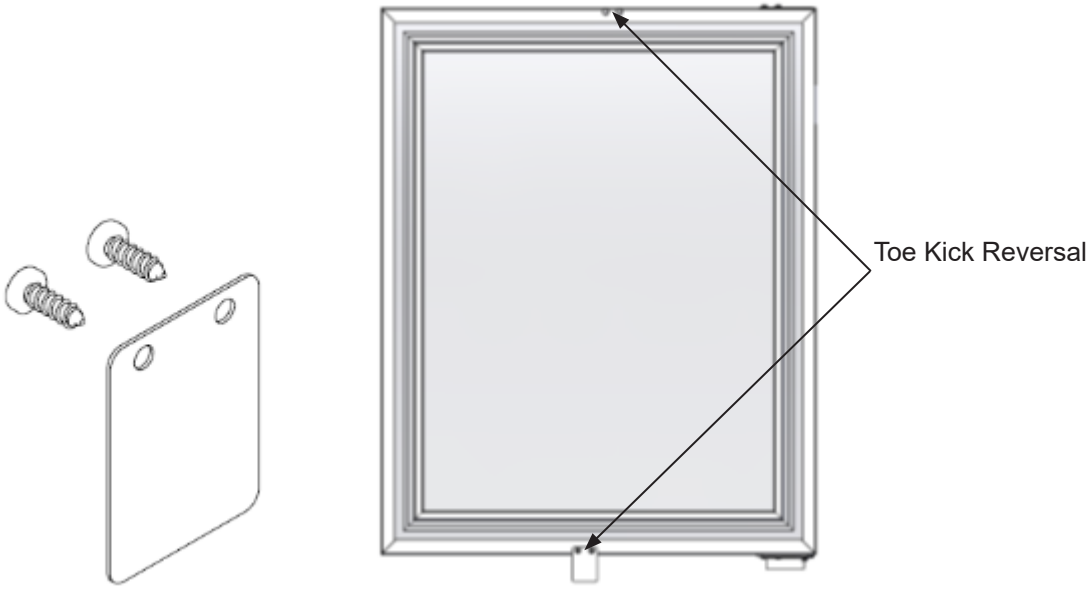

7. Reattach the upper and lower hinges, and hinge brackets to opposite sides. Then install the door.

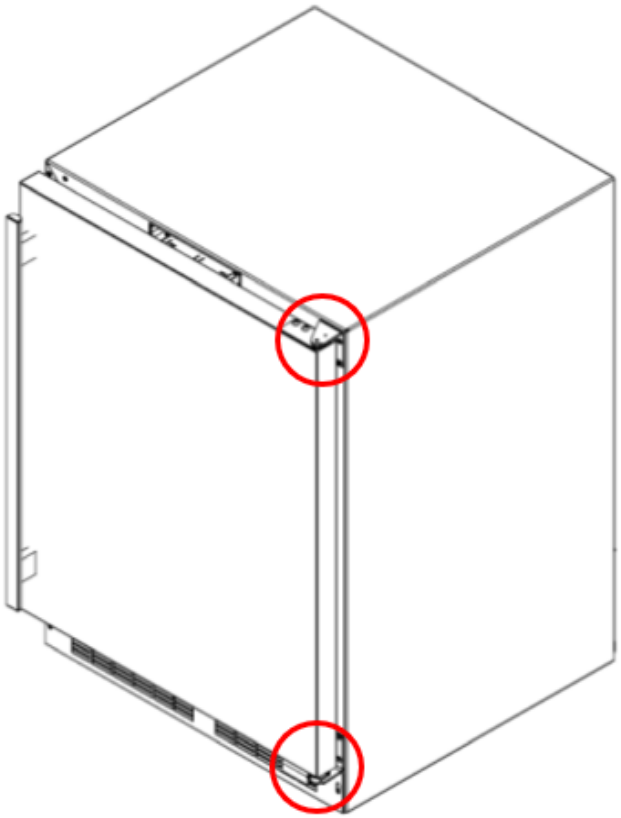

INTEGRATED PANEL DIMENSIONS

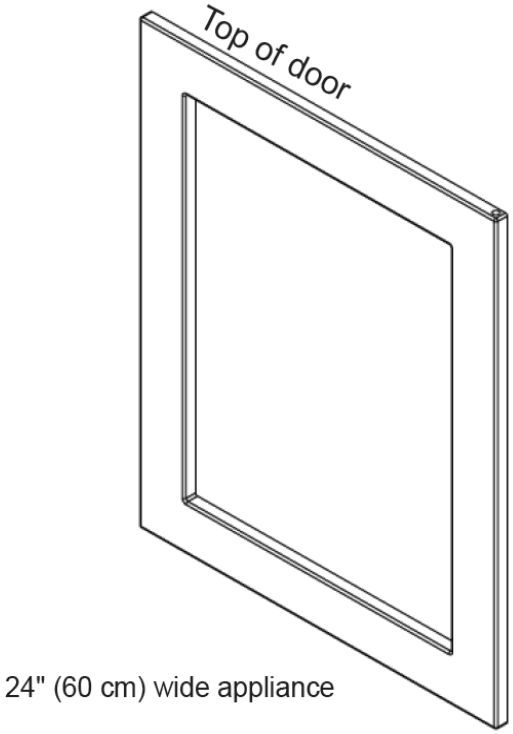

24" (60 cm) wide appliance

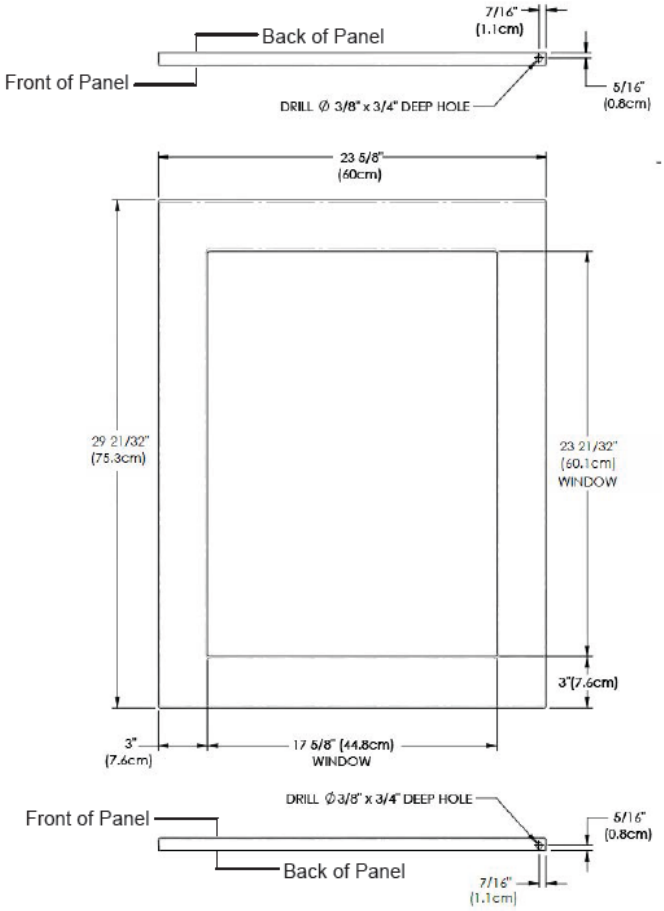

24" (60 cm)
Door Dimensions

NOTE

- Panel thickness may be ⅝" or ¾"
- Center the unit in the 24" opening
- If the hinge side of the product is pressed against the adjacent cabinet, use a ⅝" thick panel
- The window cutout is for glass door models only
- Do not use a solid door panel on a glass door model

Door Type	Maximum Panel Weight
Solid	15 lbs
Frame Glass	10 lbs

INTEGRATED PANEL INSTALLATION

Cut and prepare panels according to the information provided in the Integrated Panel Dimensions section.

⚠ CAUTION

It is important to use the factory provided grille that came with the product to assure proper air flow is maintained through the condenser. The use of a custom grille is not recommended and will void the warranty.

Step 1: Removing the Door and Hinges

Hold the door secure in the closed position and remove Hinge Pin from the Upper Hinge using a 1/8" Hex Key tool. Slowly remove the door by sliding outward away from the cabinet and lift to remove off the Lower Hinge. If reversing the door, remove hinges from cabinet per Door Reversal Instructions.

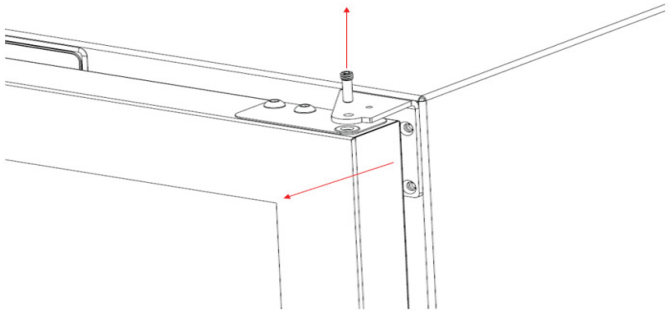

Remove the hinge bushing from the adaptor plate. A new bushing is included in the literature pack with your unit.

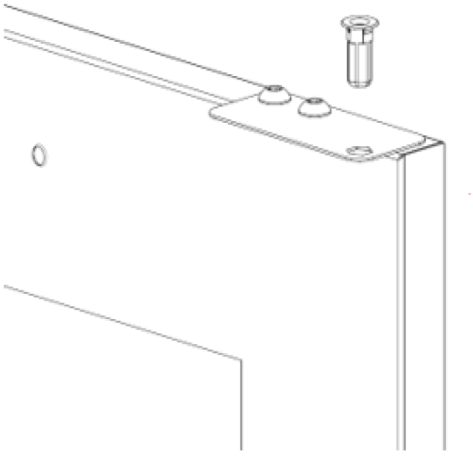

Step 2: Remove the door gasket

With the door laying on a flat surface and starting at a corner of the door, remove the magnetic door gasket from the interior side of the door. Set the gasket aside on a flat surface.

There are 10 holes in the gasket retainer extrusions (3 on each side and 2 at the top and bottom) which are used to fasten the panel to the front of the door. The screws are provided in the literature pack.

Step 3: Assemble the panel to the door

The preferred method of attaching the panel to the door is to clamp the panel to the door so it cannot move while drilling the screw pilot holes. Use bar clamps or "C" clamps with pads on the clamping surfaces that will not mar the panel or the door. The custom panel should be flush with the top of the door and centered along the width of the door. Drill holes through the gasket extrusion using the 10 holes as pilot holes. Use the drill size from the chart in the table below being careful not to drill through the front surface of the panel. Fasten the panel to the door with the 10 screws provided in the literature pack. Remove the clamps and replace the gasket in the gasket extrusion channels of the door. Some force may be required to seat the gasket into the channels. Be sure the gasket corners are seated properly.

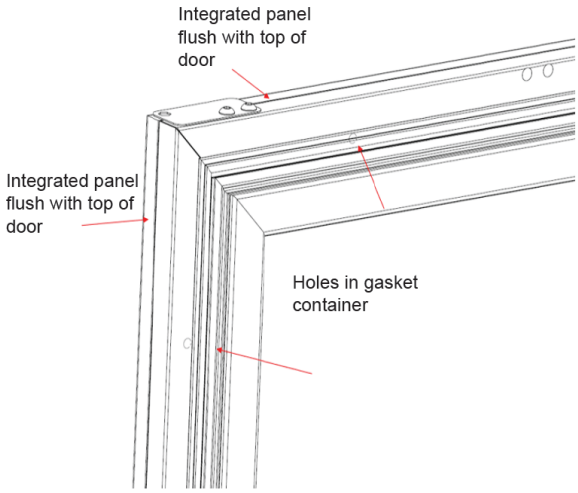

Material Type	#10 Wood Screw
Hardwood	⅛" (3.2 mm) Diameter. Pilot Hole
Softwood	7⁄64" (2.8 mm) Diameter. Pilot Hole

Step 4: Install the Door

If reversing the door swing, reinstall hinges per Door Reversal Instructions. Carefully slide lower hinge bushing over bottom hinge pin. Install the new upper hinge bushing into adaptor plate.

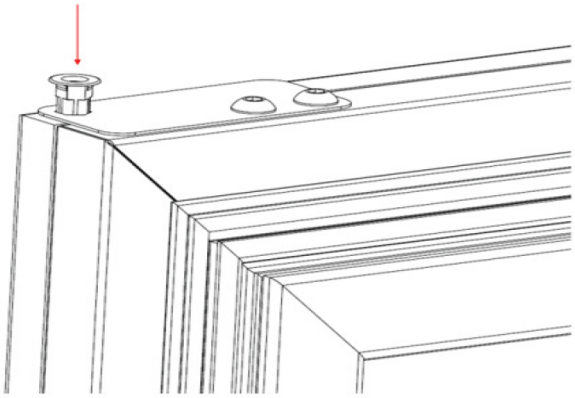

Align hinge bushing with top hinge and reinstall upper hinge pin using 1/8” Hex Key so that the pin is flush.

USING YOUR ELECTRONIC CONTROL

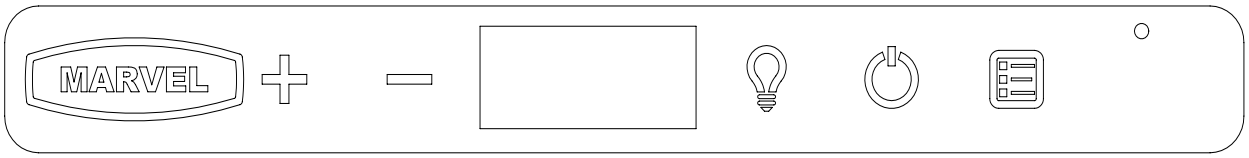

Control Function Guide

Function	Command	Notes
ON/OFF	Press and release.	Unit will immediately turn ON or OFF.
Adjust Temperature	Press or and release.	When the display is flashing, press or to adjust the set point temperature. Note: temperature displayed is the actual temperature inside unit.
Toggle Between °F / °C	Hold and for 5 seconds.	The display will change units.
Leave Interior Light On	Press and release to leave interior light on for 12 hours; press again to deactivate.	After 12 hours, factory default is restored; light will turn on when door is open.
Enable Sabbath Mode	Press and hold for 5 seconds and release.	The °F / °C symbol will flash briefly after 5 seconds. Interior light and display will go dark and remain so until user resets mode - unit continues to operate.
Disable Sabbath Mode	Press and release.	Display and interior light return to normal operation.
Showroom Mode	Hold and for 5 seconds.	The °F / °C symbol will flash. Display will be lit and interior light will function. **Unit will not cool.** Repeat command to return to normal operation.

Door Alert Notification

When the door is left open for more than 30 minutes:

- A tone will sound for several seconds every minute
- dr will appear in display
- Close door to silence alert and reset

First Use

Initial startup requires no adjustments. When plugged in, the unit will begin operating under the factory default settings. If the unit was turned off during installation, simply press and the unit will immediately switch on. To turn the unit off, press .

NOTE

Temperature displayed reflects actual temperature inside unit. If the temperature displayed is different than selected, the unit is progressing towards the selected temperature. Time to reach set point varies based upon ambient temperature, temperature of product loaded, door openings, etc. Marvel recommends allowing the unit to reach set points before loading.

INSTALLING THE WATER SUPPLY

Water Supply

⚠ CAUTION

Observe and follow all local building codes when installing this appliance.

Use ¼" outside diameter copper tubing for your water supply which is available at any local hardware or plumbing supply store. Bend the ¼" copper tubing to suit your installation being sure not to kink the tubing. Purchase enough copper tubing length and coil it behind the unit to form a "service loop" which will allow the appliance to be pulled out from the installation for servicing or cleaning. Connect the copper tubing to the "top side" of a cold water pipe to prevent the ice-maker from plugging with sediment.

A shutoff valve is recommended on the water supply line to ease servicing the appliance. **NOTE: A SELF-PIERCING TYPE VALVE IS NOT RECOMMENDED** as they are prone to clogging with sediment which will create pressure drop reducing the water supply to the unit.

Connect the copper tubing water supply to the water valve inlet with a ¼" compression nut fitting. Secure the water supply line to the back of the cabinet with the screw and clamp provided in the corner of the back panel.

Water pressure must be at a minimum of 20 psi for proper operation and a maximum of 120 psi.

Make certain all water connections are watertight after installation. Form the tubing so that it will not vibrate against the cabinet body or kink when your appliance is set in position.

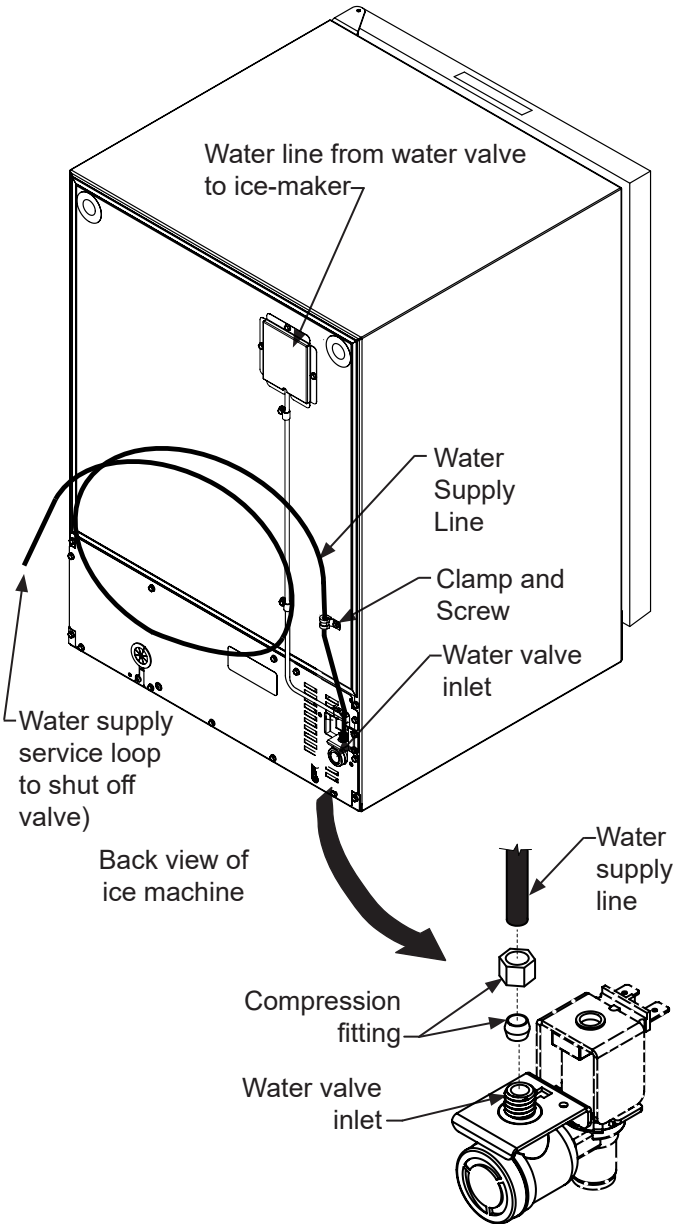

NOTE

- Do not use any thread sealers on these water line fittings.
- Reverse osmosis, softened water, and de-ionized water are not recommended as they will adversely affect the quality of the ice.

ICE MAKER OPERATION

⚠ CAUTION

The water supply to the ice-maker must be turned on prior to turning the ice-maker on. Failure to do so will cause rapid dry cycling of the ice-maker mold heater resulting in temperature control issues in the freezer compartment.

Ice Maker Operation

- The unit must be installed level for proper ice-maker operation.
- The shutoff arm wire must be down in its lowest position for the ice-maker to operate.
- When the freezer section and ice-maker unit has sufficiently cooled, the ice-maker will harvest ice cubes automatically.
- When the ice bucket is full, the ice-maker will automatically shut off.
- You may manually stop the ice-maker by raising the shut off arm to the locking position at the up most position.

NOTE

It is recommended the ice-maker is shut off when removing the bucket, or ice may be dispensed onto the freezer compartment floor.

If the ice is not used regularly, it will clump together with time. For best ice results, discard ice in the bin as required and allow the ice-maker to make a new fresh batch of ice. Shut-off the ice-maker by raising the shut-off arm before removing the bucket.

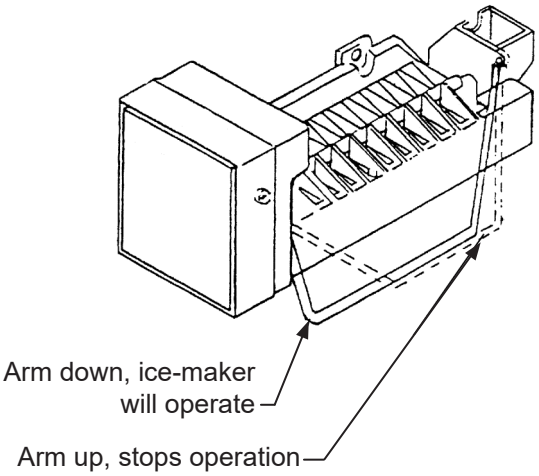

Long and short term storage of ice-maker:

When operation of the appliance is to be discontinued for any length of time, the ice cube mold in the ice-maker should be emptied by allowing the ice-maker to dispense cubes with the water supply turned off.

1. Turn the water supply off.
2. Raise the ice-maker bail arm.
3. Empty the ice bucket.
4. Replace the ice bucket in the unit and lower the bail arm.

Dispensing of the cubes should occur within 2 hours. After the ice cubes dispense - empty, clean, and replace the ice cube bucket, and raise the bail arm.

INTERIOR ADJUSTMENTS

⚠ CAUTION

Make sure your cantilever shelf is secure on the shelf supports by pressing down on the shelf before loading.

⚠ CAUTION

Never try to move a loaded shelf, remove everything from the shelf before moving. Use both hands when moving the shelf.

To Add or Remove a Shelf

Remove stored product from the shelf. Do not try to remove a loaded shelf from the appliance. Grasp the shelf front with both hands, rotate the front upward and lift out. To install a shelf insert the shelf in the appliance and insert the top hooks into the shelf support slots and drop the shelf down so the hooks drop over the bottom of the slots.

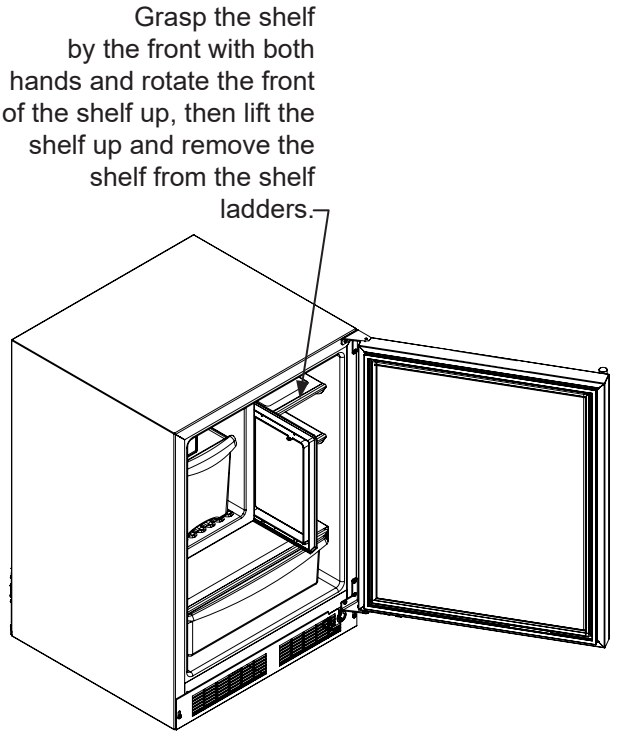

CARE & CLEANING

Front Grille
Be sure that nothing obstructs the required air flow openings in front of the cabinet. At least once or twice a year, brush or vacuum lint and dirt from the front grille are.

⚠ CAUTION

SHOCK HAZARD: Disconnect electrical power from the appliance before cleaning with soap and water.

Cabinet
The painted cabinet can be washed with either a mild soap and water and thoroughly rinsed with clear water. NEVER use abrasive scouring cleaners.

Interior
Wash interior compartment with mild soap and water. Do NOT use an abrasive cleaner, solvent, polish cleaner or undiluted detergent.

Care of Appliance
1. Avoid leaning on the door, you may bend the door hinges or tip the appliance.
2. Exercise caution when sweeping, vacuuming or mopping near the front of the appliance. Damage to the grille can occur.
3. Periodically clean the interior of the appliance as needed.
4. Periodically check and/or clean the front grille as needed.

In the Event of a Power Failure
If a power failure occurs, try to correct it as soon as possible. Minimize the number of door openings while the power is off so as not to adversely affect the appliance's temperature.

Light assembly replacement
All models use an LED to illuminate the interior of the appliance. This component is very reliable, but should it fail, contact a qualified service technician for replacement of the LED.

STAINLESS STEEL MAINTENANCE

Background

Stainless steel does not stain, corrode, or rust as easily as ordinary steel, but it is not stain or corrosion proof. Stainless steels can discolor or corrode if not maintained properly.

Stainless steels differ from ordinary carbon steels by the amount of chromium present. It is this chromium that provides an invisible protective film on the surface called chrome-oxide. This protective chrome-oxide film on the surface can be damaged or contaminated, which may result in discoloration, staining, or corrosion of the base metal.

Care & Cleaning

Routine cleaning of the stainless steel surfaces will serve to greatly extend the life of your product by removing contaminants. This is especially important in coastal areas which can expose the stainless to severe contaminants such as halide salts, (sodium chloride).

It is strongly recommended to periodically inspect and thoroughly clean crevices, weld points, under gaskets, rivets, bolt heads, and any locations where small amounts of liquid could collect, become stagnant, and concentrate contaminates. Additionally, any mounting hardware that is showing signs of corrosion should be replaced.

Frequency of cleaning will depend upon the installation location, environmental, and usage conditions.

Choosing a Cleaning Product

The choice of a proper cleaning product is ultimately that of the consumer, and there are many products from which to choose. Depending upon the type of cleaning and the degree of contamination, some products are better than others.

Typically the most effective and efficient means for routine cleaning of most stainless steel products is to give the surfaces a brisk rubbing with a soft cloth soaked in warm water and a gentle detergent, or mild mixture of ammonia. Rubbing should, to the extent possible, follow the polish lines of the steel, and always insure thorough rinsing after cleaning.

Although some products are called "stainless steel cleaners," some may contain abrasives which could scratch the surface, (compromising the protective chrome-oxide film), and some many contain chlorine bleach which will dull, tarnish or discolor the surface if not completely removed.

After the stainless surfaces have been thoroughly cleaned, a good quality car wax may be applied to help maintain the finish.

NOTE

Stainless steel products should never be installed, or stored in close proximity to chlorine chemicals.

Whichever cleaning product you chose, it should be used in strict accordance with the instructions of the cleaner manufacturer.

ENERGY SAVING TIPS

The following suggestions will minimize the cost of operating your refrigeration appliance.

1. Do not install your appliance next to a hot appliance (cooker, dishwasher, etc.), heating air duct, or other heat sources.
2. Install product out of direct sunlight.
3. Ensure the front grille vents at front of appliance beneath door are not obstructed and kept clean to allow ventilation for the refrigeration system to expel heat.
4. Plug your appliance into a dedicated power circuit. (Not shared with other appliances).
5. When initially loading your new product, or whenever large quantities of warm contents are placed within refrigerated storage compartment, minimize door openings for the next 12 hours to allow contents to pull down to compartment set temperature.
6. Maintaining a relatively full storage compartment will require less appliance run time than an empty compartment.
7. Ensure door closing is not obstructed by contents stored in your appliance.
8. Allow hot items to reach room temperature before placing in product.
9. Minimize door openings and duration of door openings.
10. Use the warmest temperature control set temperature that meets your personal preference and provides the proper storage for your stored contents.
11. When on vacation or away from home for extended periods, set the appliance to warmest acceptable temperature for the stored contents.
12. Set the control to the “off” position if cleaning the appliance requires the door to be open for an extended period of time.
13. For wine storage products:

When serving temperatures are not required, return the compartment(s) set temperature to the ideal red and white wine long term storage temperature (13°C / 55°F).

EXTENDED NON-USE

Vacation/Holiday, Prolonged Shutdown

The following steps are recommended for periods of extended non-use:

1. Remove all consumable content from the unit.
2. Disconnect the power cord from its outlet/socket and leave it disconnected until the unit is returned to service.
3. If ice is on the evaporator, allow ice to thaw naturally
4. Clean and dry the interior of the unit. Ensure all water- has been removed from the unit.
5. The door must remain open to prevent formation of mold and mildew. Open door a minimum of 2" (50 mm) to provide the necessary ventilation.

Winterization

If the unit will be exposed to temperatures of 40° F (5° C) or less, the steps above must be followed.

For questions regarding winterization, please call Marvel at (616) 754-5601.

⚠ CAUTION

Damage caused by freezing temperatures is not covered by the warranty.

OBTAINING SERVICE

If Service is Required:

- If the product is within the first year warranty period please contact your dealer or call Marvel Customer Service at 616.754.5601 for directions on how to obtain warranty coverage in your area.
- If the product is outside the first year warranty period, Marvel Customer Service can provide recommendations of service centers in your area. A listing of authorized service centers is also available at www.marvelrefrigeration.com under the service and support section.
- In all correspondence regarding service, be sure to give the service number, serial number, and proof of purchase.
- Try to have information or description of nature of the problem, how long the appliance has been running, the room temperature, and any additional information that may be helpful in quickly solving the problem.
- The table below is provided for recording pertinent information regarding your product for future reference.

For Your Records	
Date of Purchase	
Dealer's name	
Dealer's Address	
Dealer's City	
Dealer's State	
Dealer's Zip Code	
Appliance Serial Number	
Appliance Service Number	
Date Warranty Card Sent (Must be within 10 days of purchase).	

TROUBLESHOOTING

Before Calling for Service

If you think your Marvel product is malfunctioning, read the Control Operation section to clearly understand the function of the control.

If the problem persists, read the Normal Operating Sounds and Troubleshooting Guide sections below to help you quickly identify common problems and possible causes and remedies. Most often, this will resolve the problem without the need to call for service.

If Service Is Required

If you do not understand a troubleshooting remedy, or your product needs service, contact Marvel Refrigeration directly at 616.754.5601.

When you call, you will need your product Model and Serial Numbers. This information appears on the Model and Serial number plate located on the upper right or rear wall of the interior of your product.

Normal Operating Sounds

All models incorporate rigid foam insulated cabinets to provide high thermal efficiency and maximum sound reduction for its internal working components. Despite this technology, your model may make sounds that are unfamiliar.

Normal operating sounds may be more noticeable because of the unit's environment. Hard surfaces such as cabinets, wood, vinyl or tiled floors and paneled walls have a tendency to reflect normal appliance operating noises.

Listed below are common refrigeration components with a brief description of the normal operating sounds they make.

NOTE

Your product may not contain all the components listed.

- Compressor: The compressor makes a hum or pulsing-sound that may be heard when it operates.
- Evaporator: Refrigerant flowing through an evaporator-may sound like boiling liquid.
- Condenser Fan: Air moving through a condenser may-be heard.
- Automatic Defrost Drain Pan: Water may be heard dripping or running into the drain pan when the unit is in the defrost cycle.

Troubleshooting Guide

⚠ WARNING

ELECTROCUTION HAZARD - Never attempt to repair or perform maintenance on the unit before disconnecting the main electrical power.

Troubleshooting - What to check when problems occur:

Problem	Possible Cause and Remedy
Interior Light Does Not Illuminate	If the unit is cooling, it may be in Sabbath mode.
Light Remains on When Door Is Closed.	Turn off light switch if equipped. Adjust light actuator bracket on bottom of door.
Unit Develops Frost on Internal Surfaces.	Ensure the door is closing and sealing properly.
Unit Develops Condensation on External Surfaces.	The unit is exposed to excessive humidity. Moisture will dissipate as humidity levels decrease.
Product is Not Cold Enough	Air temperature does not indicate product temperature. See Checking Product Temperature. below. Adjust the temperature to a cooler set point. Ensure unit is not located in excessive ambient temperatures or in direct sunlight. Ensure the door is closing and sealing properly. Ensure the interior light has not remained on too long. Ensure nothing is blocking the front grille, found at the bottom of the unit. Ensure the condenser coil is clean andfree of any dirt or lint build-up.

TROUBLESHOOTING

Checking Product Temperature

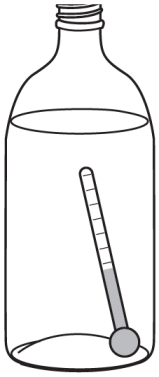

To check the actual product temperature in the unit:

1. Partially fill a plastic (nonbreakable) bottle with water
2. Insert an accurate thermometer.
3. Tighten the bottle cap securely.
4. Place the bottle in the desired area for 24 hours.
5. Avoid opening the unit during the testing period.
6. After 24 hours, check the temperature of the water. If required, adjust the temperature control in a small increment (see Control Operation).

Causes which affect the internal temperatures of the cabinet include:

- Temperature setting.
- Ambient temperature where installed.
- Installation in direct sunlight or near a heat source.
- The number of door openings and the time the door is open.
- The time the internal light is illuminated. (This mainly affects product on the top rack or shelf.)
- Obstruction of front grille or condenser.

WIRE DIAGRAM

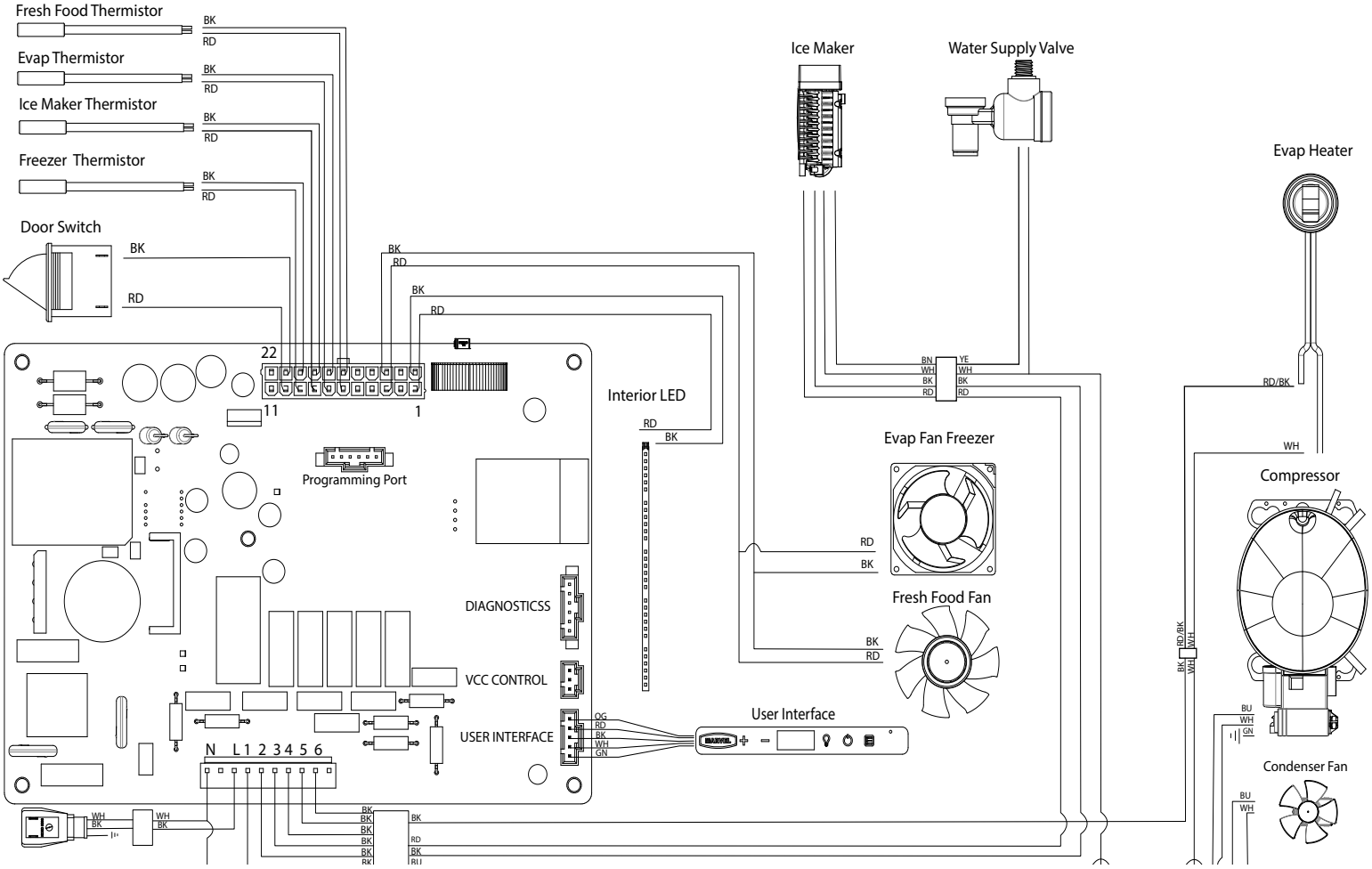

PRODUCT LIABILITY

Field service technicians are authorized to make an initial assessment in the event of reported damages. If there are any questions about the process involved, the technician should call Marvel for further explanation.

While inspecting for defects or installation issues, photos should be taken to document any damages or issues found.

During the assessment, if the service technician is able to find the source of the damage and it can be resolved by replacement of a part, the servicer is authorized to replace the part in question. The part that caused the damage must be returned to Marvel in its entirety. The part must be clearly labeled with the serial number of the unit it was removed from, the date, and the servicer who removed the part.

If the service technician determines the damage is the result of installation issues (water connection/drain, etc.), the consumer would be notified and the issues shall be resolved at the direction of the consumer.

If damage is evident and the service technician is unable to find the source, Marvel must be contacted at 616.754.5601 for further direction.

1260 E. Van Deinse St. • Greenville, MI 48838
T: 616.754.5601
Website: www.marvelrefrigeration.com

The original refrigeration experts since 1892.

Service Parts List

marvelrefrigeration.com
616-754-5601

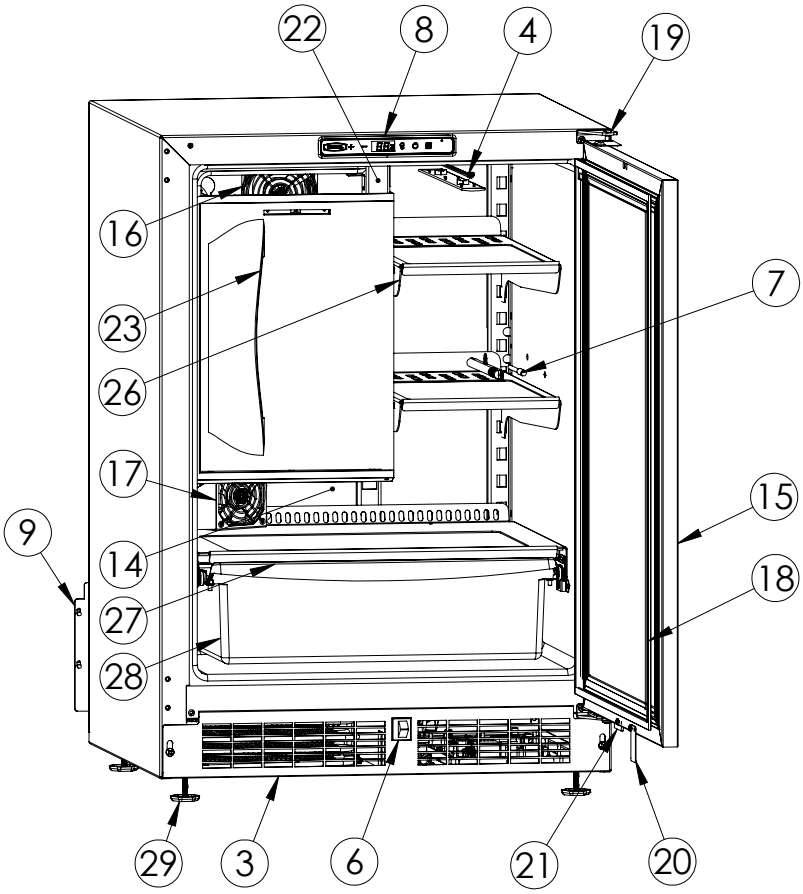

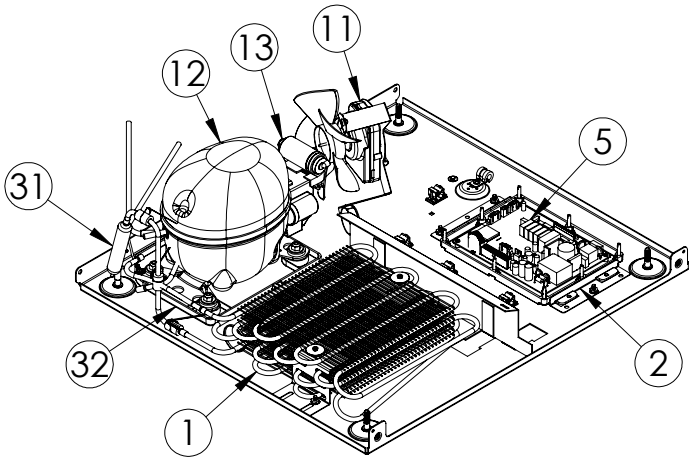

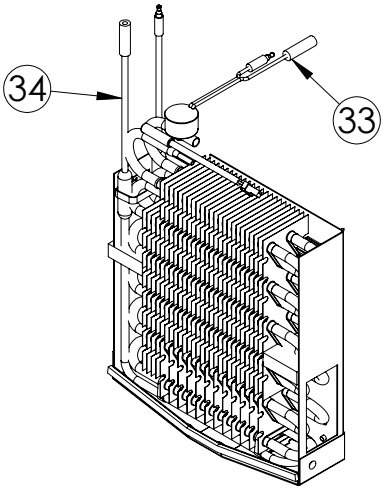

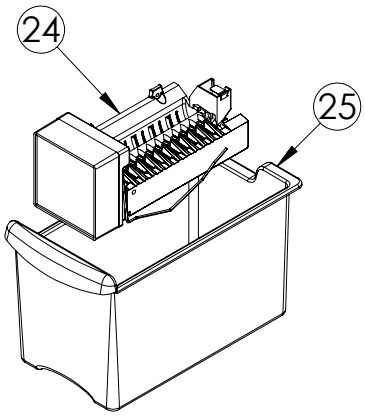

MLRI224-IS01A		
ITEM	**DESCRIPTION**	**MARVEL P/N**
1	CONDENSER ASSEMBLY	42249374
2	MAIN CONTROL BOARD KIT	S42088795
3	GRILLE	S41015806-BLK
4	LED LIGHT STRIP	S68100
5	CONTROL BOARD	S68177
6	REED SWITCH	42246922
7	THERMISTOR ASSEMBLY	S41015903-GRY
8	UI DISPLAY KIT	S68167-01
9	ACCESS COVER	S41016032
10	MECHANICAL HARNESS *	S41016213
11	CONDENSER FAN MOTOR	42249159
12	COMPRESSOR	S41015689
13	COMPRESSOR ELECTRICALS	S41015922
14	EVAPORATOR ASSEMBLY	S41013571
15	DOOR ASSEMBLY	S42038981
16	EVAP FAN	S41014253
17	FRIDGE FAN	S41013096
18	DOOR GASKET	S31580-035
19	HINGE KIT	S52411635-CHR
20	STRIKER PLATE	S41015709-BLK
21	DOOR STOP	S41015708-BLK
22	FREEZER DIVIDER	S42418881
23	FREEZER DOOR	S42418976
24	ICE MAKER KIT	S67041-01
25	ICE BUCKET	S41013552-CLR
26	HALF SHELF	S42138539-WHT
27	CRISPER SHELF	42249325
28	CRISPER BIN	42249326
29	LEG LEVELERS (4)	42243808
30	POWER CORD	S41050606
31	DRIER	S41013226
32	DRAIN PAN	S41013227
33	DEFROST HEATER	42249372
34	DEFROST THERMOSTAT	S41013590
35	WATER VALVE*	90-54041-00

* NOT PICTURED

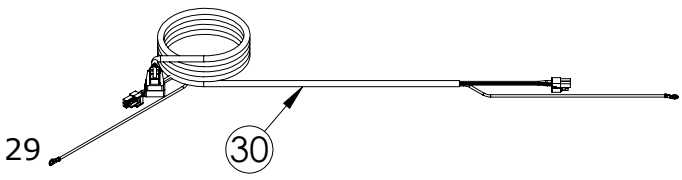

ORDERING REPLACEMENT PARTS

Parts may be ordered online at partsformarvel.com.

Or contact:

www.marvelrefrigeration.com (Servicers choose "Login" for service account).
Phone Number: (616) 754-5601

NOTE

Use only genuine Marvel replacement parts. The use of non-Marvel parts can reduce performance, damage the unit, and void the warranty.

Warranty parts will be shipped at no charge after Marvel confirms warranty status. Please provide the model, serial number, part number and part description. Some parts will require color or voltage information.

Marvel requires the return of original parts, we will inform you when the parts order is taken. This requirement will be noted on your packing list. A prepaid shipping label will be emailed to you. Please enclose a copy of the parts packing list and be sure the model and serial numbers are legible on the paperwork. Tag the part with the reported defect.

Customers and non-authorized servicers may order non-warranty parts at www.partsformarvel.com. Authorized servicers with a servicer login may order non-warranty parts at www.marvelrefrigeration.com.

R600A Specifications & Handling

⚠ WARNING

Flammability warnings for a pure-iso-butane refrigerant.







Gloves and Eye Protection must be used.





R-600a is considered non-toxic, but is flammable when mixed with air.

Keep a dry powder type fire extinguisher in the work area.



R-600a is heavier than air, do not allow any leakage/migration to low areas such as basements and stairs.

Never use a torch on a fully charged refrigeration system.

Never substitute Marvel OEM replacement parts or methods of construction.

R-600a must be stored and transported in approved containers.

R600A SPECIFICATIONS

⚠ WARNING

Only skilled and well trained service technicians permitted to service R-600a equipped products.

All tools and equipment must be approved for use with R-600a refrigerant.

Local, state and federal laws, standards must be observed along with proper certification and licensing.

Ventilation is required during servicing.

No conversions to R-600a from any other refrigerants. OEM R-600a equipped unit only.

Service area must be free of ignition sources.

No smoking is allowed in the service area.

All replacement electrical components must be OEM and installed properly (sealed and covered).

If the evaporator is cold prior to service, it must be thawed prior to service.

When using a vacuum pump, start pump before opening refrigeration system.

Vacuum pump and recovery equipment should be at least 10 feet from the work area.

It is recommended that a simple LPG gas detector is on site during service.

Ensure that all R-600a is removed from the system prior to brazing any part of the sealed system.

Only a clean, dry leak free system should be charged with R-600a.

R-600A Specifications/Labeling

R-600a equipped products are labeled (both the unit and the compressor).

R-600a is colorless and odorless.

R-600a is considered non-toxic, but is flammable when mixed with air.

Do not remove or alter any R-600a labeling on the product.

Use only a refrigerant grade R-600a from a properly labeled container.

Recovering/Reclaiming R-600A

(R-600a has been exempted from recovery/reclaiming requirements by the US EPA)

Recovery/Reclaiming equipment must be approved for use with R-600a.

Ensure the evaporator is at room temperature prior to recovery/reclaiming R-600a.

Use a common piercing pliers or piercing valve to remove R-600a from the compressor process tube. (Note: Piercing devices must not be left on the system and must be replaced with a Schrader type valve).

Evacuate/reclaim via the piecing pliers to ensure the system is empty of R-600a before any system work is performed.



The recovery cylinder must be evacuated (no air inside) prior to accepting R-600a.

The recovery cylinder must not be filled more than 45% safe fill level and refrigerants must not be mixed.

The recovery cylinder must be clearly marked with R600a and Flammable Warning labels.

Ensure proper ventilation during recovery/reclaiming of R600a.

Start vacuum pump/recovery pump prior to piercing the compressor process tube.

Follow recovery/reclaim OEM instructions for the specific equipment used.

System Repair

Ensure no residual R-600a refrigerant is left within the system prior to repair (simple venting is not sufficient).

Evacuate and charge with dry nitrogen for leak checks.

Repair leaks or replace system parts as required.

When re-brazing, the system must be purged with dry nitrogen and at least one access point open to the atmosphere.

When re-brazing, proper ventilation is required along with constant monitoring for the presence of R600a refrigerant.

The filter dryer must be replaced any time the sealed system is serviced.

No system should be open to the atmosphere for longer than 15 minutes to avoid moisture migration into the system components.

Leak Detection

After removal of the R-600a, the unit can be charged with dry nitrogen or helium.

Electronic leak detection or soap solution can be used tocheck for nitrogen/helium leaks.



Never use a halide torch or lighted match to check the system for leaks at any time.

The high side of the refrigeration system (compressor discharge to outlet of drier) must be leak tested with the compressor running.

The low side of the refrigeration system (evaporator, compressor and suction line) must be leak tested with the compressor off (equalized pressure).

Recharging

No air is ever to be allowed inside the refrigeration system (R-600a refrigerant or dry nitrogen only).

Never use a torch on a fully charged refrigeration system.

Install a Schrader Type access port on the compressor process stub.



Evacuate the system to 100 microns prior to charging.

Weigh in the R-600a charge using a refrigerant scale (run compressor an extra two minutes to clear the charging hoses).

Seal the Schrader Type access port, a proper cap and seal must be used to close the system.



Summary

Safely handling R-600a requires proper procedures and training.

R-600a approved service tools must be used.

R-600a labeling must not be removed or altered.

Proper ventilation during service is required.

Never apply a torch to a charged R-600a refrigeration system.

Use OEM replacement service parts and do not alter the construction of the unit.

SYSTEM DIAGNOSIS GUIDE

Refrigeration System Diagnosis Guide

System Condition	Suction Pressure	Suction Line	Compressor Discharge	Condenser	Capillary Tube	Evaporator	Wattage
Normal	Normal	Slightly below room temperature	Very hot	Very hot	Warm	Cold	Normal
Overcharge	Higher than normal	Very cold may frost heavily	Slightly warm to hot	Hot to warm	Cool	Cold	Higher than normal
Undercharge	Lower than normal	Warm - near room temperature	Hot	Warm	Warm	Extremely cold near inlet - Outlet below room temperature	Lower than normal
Partial Restriction	Somewhat lower than normal vacuum	Warm - near room temperature	Very hot	Top passes warm - Lower passes cool (near room temperature) due to liquid	Room temperature (cool) or colder	Extremely cold near inlet - Outlet below room temperature backing up	Lower than normal
Complete Restriction	In deep vacuum	Room temperature (cool)	Room temperature (cool)	Room temperature (cool)	Room temperature (cool)	No refrigeration	Lower than normal
No Gas	0 PSIG to 25” R	Room temperature (cool)	Cool to hot	Room temperature (cool)	Room temperature (cool)	No refrigeration	Lower than normal

COMPRESSOR SPECIFICATIONS

⚠ WARNING

Electrocution can cause death or serious injury. Burns from hot or cold surfaces can cause serious injury. Take precautions when servicing this unit.

Disconnect the power source.

Do not stand in standing water when working around electrical appliances.

Make sure the surfaces you touch are not hot or frozen.

Do not touch a bare circuit board unless you are wearing an anti-static wrist strap that is grounded to an electrical ground or grounded water pipe.

Handle circuit boards carefully and avoid touching components.

	EMC46CLC
Refrigerant	R600A
Voltage	115 VAC
Frequency	60 Hz
Start Winding	5 Ohm at 77°F
Run Winding	7 Ohm at 77°F
Run to Start	12 Ohm at 77°F
LRA	8.0 A
FLA	2.18A
Starting Device	Run Cap 12VF 250V P2
Overload	OLP 4TM302KFBYY5

*All resistance readings are ± 10%.

CAUTION

Never attempt to repair or perform maintenance on the unit until the main electrical power has been disconnected from the unit.

Specific Errors and Issues

The advanced diagnostic capabilities of the electronic controls utilized on the 1, 3, and 5 Class units allow for easy and thorough troubleshooting.

Navigation of the control is the key and is explained in the Control Operation section of the manual, along with control button layout, control function descriptions, a service mode menu and service menu selection explanations.

Verification of temperature and thermistor performance can be identified by directly viewing thermistor readings in the service mode.

Included in this section are some diagnostic tips; if additional help is required, please contact Marvel at 616.754.5601 for assistance.

Normal Operating Sounds

All models incorporate rigid foam insulated cabinets to provide high thermal efficiency and maximum sound reduction for its internal working components. Despite this technology, your model may make sounds that are unfamiliar.

Normal operating sounds may be more noticeable because of the unit's environment. Hard surfaces such as cabinets, wood, vinyl or tiled floors and paneled walls have a tendency to reflect normal appliance operating noises.

Listed below are common refrigeration components with a brief description of the normal sounds they make.

NOTE

Your product may not contain all the components listed.

- Compressor: The compressor makes a hum or pulsing sound that may be heard when it operates.
- Evaporator: Refrigerant flowing through an evaporator may sound like boiling liquid.
- Condenser Fan: Air moving through a condenser may be heard.
- Automatic Defrost Drain Pan: Water may be heard dripping or running into the drain pan when the unit is in the defrost cycle.

Solenoid Valves: An occasional clicking sound may be heard as solenoid valves are operated.

TROUBLESHOOTING EXTENDED

Concern	Potential Causes	Action
Not Cooling	Compressor overheating	Verify proper air flow through condenser. Is condenser clean?
		Confirm condenser fan operation.
	Compressor not operating	Test overload and relay, replace as needed.
	Compressor operating - no cooling	Refer to System Diagnosis Guide.
Frozen Product	Control set too cold	Adjust Set Point Temp accordingly.
	Thermistor failure	Check Error Log in Service Mode, OHM thermistor.
Frost Buildup Inside Unit	Door Ajar or Restricted from Closing	Check door clearance to adjoining cabinetry. Check distribution of product in unit.
	Thermistor failure	OHM thermistor
Display Not Working	Display unplugged	Verify that both ends of the display wiring are firmly connected.
	Display wiring broken or damaged	Perform continuity test of wiring and replace as needed.
Interior Lights Not Working	Door switch misaligned or defective	Check the function of reed switch and door magnet adjustment.
Noisy	Refrigeration tubing touching cabinet	Carefully reposition tubing.
	Fan blade obstruction (wiring, foam insulation, packaging material)	Remove obstruction.

Main Control

The main control board is very robust and is rarely the cause of system issues. It is important to fully diagnose the board for any suspected failures before attempting to remove the board for replacement or service. Follow the guidelines below to fully test and diagnose the main control.

Power Fault

If the unit does not (or seems to not) power on, follow the flow chart below to help diagnose the issue. Before beginning it is important to first verify the unit is not simply set to sabbath mode.

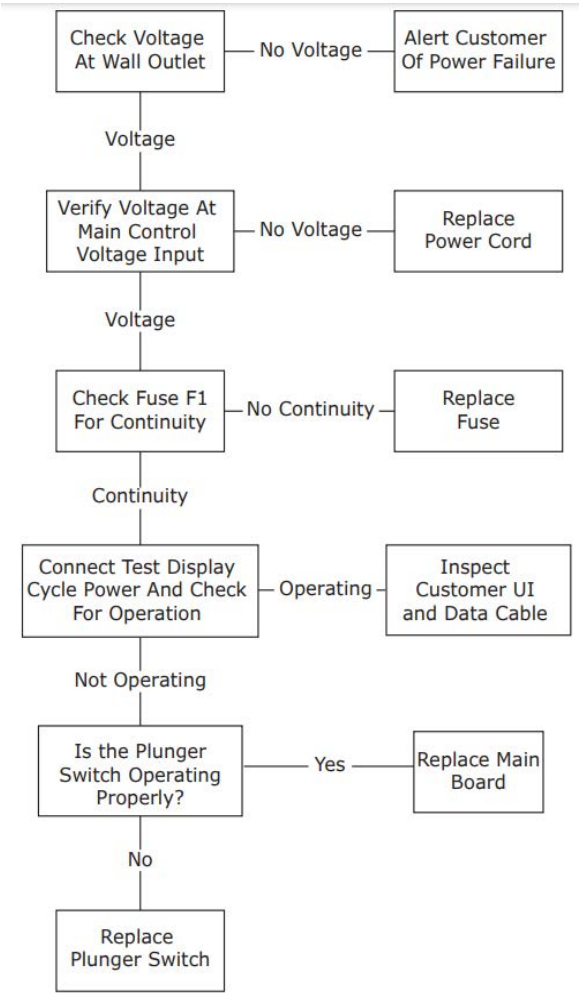

CAUTION

Precautions must be taken while working with live electrical equipment. Be sure to follow proper safety procedures while performing tests on live systems.

Rocker Switch

A rocker switch is used to monitor door state. When the door is closed it comes into contact with the rocker which closes a circuit which turns the light and display off. When the door is open the rocker moves outward and opens the circuit. If the door is left open for longer than 5 minutes the switch will trigger an error code and set an audible warning.

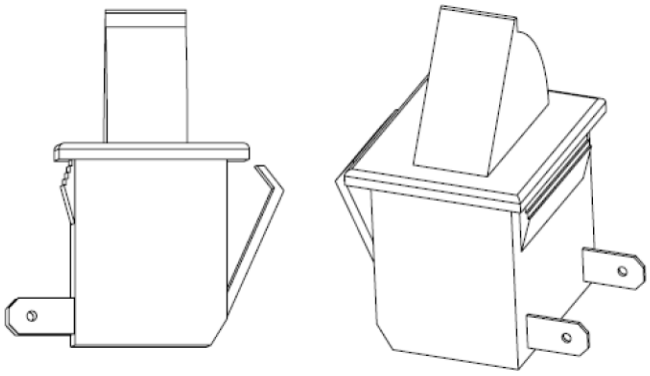

CONTROL OPERATION-SERVICE

UI Button Layout

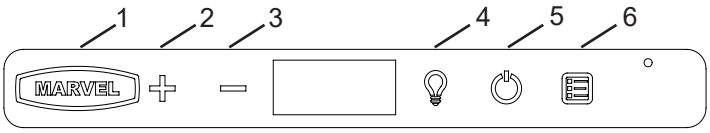

1. Hidden Button
   -Access Service Menu
   -No LED directly above. All LEDs turn on with button

2. Up Button
   -Increases temperature
   -Navigates through service menu

3. Down Button
   -Decreases temperature
   -Navigates through service menu

4. Light Button
   -Activates light for 3 hours on select models
   -Used to select items in service menu

5. Power Button
   -Turns unit off/on

6. Clean Button
   -Toggles temperature between zones in Dual-Zone models.
   -Hold down (-) button and press clean button to toggle temperature between zones in Dual-Zone models.
   -White light display = upper zone
   -Blue light display = lower zone

Control Function Guide

Function	Command	Display/Options
ON/OFF	Press and release	Unit will immediately turn ON or OFF
Sabbath Mode	See "Sabbath Mode" section	

Showroom Mode

This mode is designed to show units in a display environment. When in this mode the only functions will be the control and cabinet lights. The compressor, fans, etc. will not operate. To enter/exit this mode hold the light key and the power key for 5 seconds. The display will flash once and beep and the degree symbol will begin to flash. When the degree symbol is flashing the unit will allow the use of the control for demonstrations. The unit can be left in this mode indefinitely.

Service Mode

This mode has options available for service diagnostics. To enter the mode hold the hidden key for 10 seconds. The display will show "01." When in this mode use the up and down arrows to select the desired option. The LIGHT key is the ENTER key and will initiate the function. If changing a setting, you must press the LIGHT key again to retain the changed setting. To exit the service mode scroll to option "00" and press the LIGHT key. After Ave minutes of not touching any keys the mode will also exit automatically.

Service Mode Guide

0. Exit
1. Thermistor 1 temperature not including offsets.
2. Thermistor 2 temperature not including offsets.
3. Thermistor 3 temperature not including offsets.
4. Thermistor 4 temperature not including offsets.
5. Thermistor 1 offset. (+/- 10)
6. Thermistor 2 offset. (+/- 10)
7. Thermistor 3 offset. (+/- 10)
8. Thermistor 4 offset. (+/- 10)
9. Thermistor 2 set point
10. Thermistor 3 set point.
11. Thermistor 4 set point.
12. Defrost Interval (0 to 99 hr)
13. Defrost duration (0 to 99 min)
14. Error Log (See Appx D)
15. Clear error log (hold light key until cleared)
16. Thermistor 1 differential (+5)
17. Thermistor 3 differential (+5)
18. Evaporator fan on delay (0 to 99 sec)
19. Evaporator fan off delay (0 to 99 sec)
20. Individual component toggle
- Option #0 – Exit
- Option #1 – Relay 1
- Option #2 – Relay 2
- Option #3 – Relay 3
- Option #4 – Relay 4
- Option #5 – Relay 5
- Option #6 – Relay 6
- Option #7 – DC Output 1
- Option #8 – DC Output 2
- Option #9 – DC Output 3
- Option #10 – DC Output 4
- Option #11 – DC Output 5
- Option #12 – Serial output (Compressor)

21. Model number
22. Light All Segments
23. Activate Defrost/Harvest- press and hold for 3 seconds to activate defrost/harvest
24. Defaults- press and hold for 3 seconds to restore all values to factory defaults.
25. Main Software (Display only)
26. Live Log Period (frequency that data is output to diagnostics port)
27. Factory test mode (0=Off, 1=On)
28. Compressor RPM
29. Freeze time adjust (Model 54 only)
30. Harvest time adjust (Model 54 only)
31. Low temp alarm limit (Model 55 only)
32. High temp alarm limit (Model 55 only)

1. THERMISTOR 1 — ZONE
This shows the pure thermistor reading with no offsets taken into account.
2. THERMISTOR 2 — EVAPORATOR
This shows the pure thermistor reading with no offsets taken into account.
3. Does not apply to this model.
4. Does not apply to this model.
5. THERMISTOR 1 — ZONE OFFSET
(DO NOT MAKE AN ADJUSTMENT TO THIS WITHOUT CONTACTING TECH LINE: 616-754-5601
This calibration is only to be used if actual temperature at thermistor #1 is off from set point. By adjusting the offset higher we can force the unit to drive the temperature down below the set point. (example: adjusting from 0 to +2 will drop the unit temperature 2 degrees)
6. THERMISTOR 2 — EVAPORATOR OFFSET
(DO NOT MAKE AN ADJUSTMENT TO THIS WITHOUT CONTACTING TECH LINE: 800-779-2547)
7. Does not apply to this model.
8. Does not apply to this model.
9. THERMISTOR 2 — SET POINT MINUS OFFSET
This shows the thermistor reading with offsets taken into account.
10. Does not apply to this model.
11. Does not apply to this model.
12. ADJUST DEFROST INTERVAL — 3 TO 24 HOURS
This will adjust the interval between defrosts from 3 to 24 hours. Adjusting from the factory settings may cause undesired temperature in the refrigerator section.
13. ADJUST DEFROST DURATION — 0 TO 99 MINUTES
The length of the defrost can be adjusted 0 to 99 minutes long. The other defrost parameters still apply. Lengthening a defrost may cause higher than normal temperatures in the refrigerator section.
14. VIEW ERROR LOG
A list of errors in the order they occurred will scroll on the display. All errors are logged in memory. Only door error is displayed on the display and has an audible signal.
E0: Door 1 (upper) open.
E1: Thermistor 1 open.
E2: Thermistor 2 open.
E3: Thermistor 3 open.
E4: Thermistor 4 open (Does not apply to this model).
E5: Thermistor 1 shorted.
E6: Thermistor 2 shorted.
E7: Thermistor 3 shorted.
E8: Thermistor 4 shorted (Does not apply to this model).
E9: Door 2 (lower) open.
P1: Pump Circuit open (Does not apply to thismodel).

15: CLEAR ERROR LOG
To clear errors, press and hold (5 seconds) when CLR is flashing.
16: THERMISTOR - 1 DIFFERENTIAL
This number should not be adjusted.
17. Does not apply to this model.
18. THIS NUMBER SHOULD NOT BE ADJUSTED
19. THIS NUMBER SHOULD NOT BE ADJUSTED
20. INDIVIDUAL COMPONENT TOGGLE

Display #	Relay / Output

- Option #0 – Exit
- Option #1 – Relay 1
- Option #2 – Relay 2
- Option #3 – Relay 3
- Option #4 – Relay 4
- Option #5 – Relay 5
- Option #6 – Relay 6
- Option #7 – DC Output 1
- Option #8 – DC Output 2
- Option #9 – DC Output 3
- Option #10 – DC Output 4
- Option #11 – DC Output 5
- Option #12 – Serial output (Compressor)

21. MODEL NUMBER INDICATOR
Displays the two-digit model number of the specific unit. See Model list table.
22. LIGHT ALL LED SEGMENTS
This will illuminate all the LEDs on the display to ensure they work properly
23. ACTIVATE DEFROST /HARVEST
-Press and hold for 3 seconds to activate
24. FACTORY DEFAULTS
-Press and hold for 3 seconds to restore all values to factory defaults
25. MAIN SOFTWARE
26. Does not apply to this model
27. FACTORY TEST MODEL
0 = Off, 1 = On
28. COMPRESSOR RPM
29. FREEZE TIME ADJUST (MODEL 54 ONLY)
30. HARVEST TIME ADJUST (MODEL 54 ONLY)
31. LOW TEMP ALARM LIMIT (MODEL 55 ONLY)
32. HIGH TEMP ALARM LIMIT (MODEL 55 ONLY)

THERMISTOR

Thermistors

Thermistors are used for various temperature readings. Thermistors provide reliable temperature readings using a resistance which varies based on surrounding temperatures. If a faulty thermistor is suspected it may be tested using an accurate ohmmeter.

Both thermistors in the unit are identical. If a thermistor is suspected of being defective, the resistance can be verified. Place the thermistor in an ice water bath, the resistance should read 16.lk Ohms +/-5% on your meter.

Thermistor connections must be kept clean. A thermistor connection that has become corroded can cause resistance values from the thermistor to change as they pass through a dirty connection to the board.

It is for that reason that we apply dielectric grease to all of our thermistor connections. Dielectric grease will help to keep thermistor connections clean and dry.

If you change a thermistor in the unit please re-apply dielectric grease to the connection. If you encounter a dirty thermistor connection, you should replace the thermistor and the thermistor harness.

Thermistor error information can be found in the Control Operations - Service section.

This unit has two thermistor.

Thermistor one (Ice Bin):
Located along the left hand side wall. It is used to maintain the ice level in the bin.

Thermistor two (Condenser):
Located on the condenser. It is used for defrost. Production Time Composition (PTC): Higher ambient and/or restricted airflow can have negative effect on ice production. To compensate the production cycle will increase 40 seconds for every 1ºF the condenser temperature (T2) is above 80°F.

Thermistor Failure

Zone Thermistor

If the condenser (T2) stop working an error (E2) will be displayed in service menu. If the bin thermistor (T1) fails the unit will stop working and E1 will be displayed in service menu. The unit will not operate if either thermistor fails.

Evaporator Thermistor

If the evaporator thermistor fails, the unit will rely on a preset defrost timer during defrost cycles. The unit will otherwise operate normally. Refer to defrost section.

Thermistor Resistance Data

Temp (F)	Temp (C)	Nominal Resistance (5K OHMS)*
5	-15	36503
14	-10	27681
23	-5	21166
32	0	16330
41	5	12696
50	10	9951
59	15	7855
68	20	6246
77	25	5000
86	30	4029
95	35	3266
104	40	2665

Temperature	Nominal Resistance (10 OHMS)
-40°C (-40°F)	239.700
-35°C (-31°F)	179.200
-30°C (-22°F)	135.200
-25°C (-13°F)	102.900
-20°C (-4°F)	78.910
-15°C (5°F)	61.020
-10°C (14°F)	47.540
-5°C (23°F)	37.310
0°C (32°F)	29.490
5°C (41°F)	23.460
10°C (50°F)	18.780
15°C (59°F)	15.130
20°C (68°F)	12.260
25°C (77°F)	10.0
30°C (86°F)	8.194
35°C (95°F)	6.752
40°C (104°F)	5.592
45°C (113°F)	4.655
50°C (122°F)	3.893
55°C (131°F)	3.271
60°C (140°F)	2.760
65°C (149°F)	2.339
70°C (158°F)	1.990
75°C (167°F)	1.700
80°C (176°F)	1.458

DEFROST

Defrost

This unit defrosts every 8 hours of compressor runtime for 60 minutes. If you have verified that the unit does not have an ambient air leak, utilize the Control Operation - Service section and adjust unit to defrost every 6 hours for 60 minutes. Also, adjust the #2 thermistor to -4 instead of 0.

REMOVE FAN & COVER

Convection Cooling

This unit is equipped with an advanced convection cooling system. Convection cooling stabilizes cabinet temperature, cools product faster and increases energy efficiency.

Evaporator Fan

The evaporator fan is responsible for circulating warm air from the refrigeration zone, past the evaporator and back into the refrigerated zone.

The evaporator fan is factory set to have a 1 minute delay at the beginning of a cooling cycle. This delay gives the evaporator time to cool properly before warm air is passed over it. The fan will continue to run for an additional 2 minutes at the end of a cooling cycle. Fan delay times can be modified through the service menu.

Evaporator fan operation is also determined by door switch state. If the door switch circuit opens, the fan will stop. When the door switch circuit is closed the fan will either continue running with the cooling cycle, or if not currently cooling, the fan will run for 1 minute to circulate air and clear any condensation that may have appeared on glass doors and shelves.

Note: If the unit is set to sabbath mode, the evaporator fan will no longer respond to the state of the door switch. In order to operate efficiently, the evaporator fan blade and vents should be unobstructed and free of any dust buildup.

Evaporator Fan Replacement

Should the evaporator fan need to be replaced follow the steps below.

1. Remove any product from the unit.
2. Remove unit from cabinetry to access rear.
3. Disconnect power to the unit.
4. Remove internal shelving.
5. Remove evaporator cover screws.

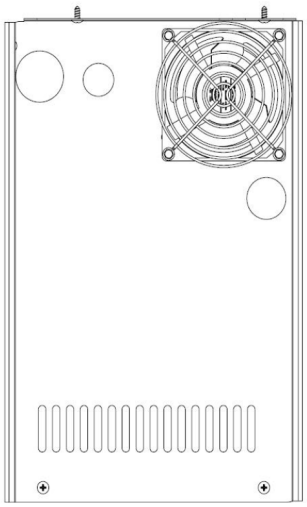

6. Grasp evaporator cover, pull forward and up as bottom of cover is installed behind the front edge of the drain trough.
7. While pulling the evaporator cover clear of the unit, it may be necessary to use your free hand to manipulate the fan plug end through the pass-through hole.
8. Remove the 4 screws mounting the fan shroud to the evaporator plate.

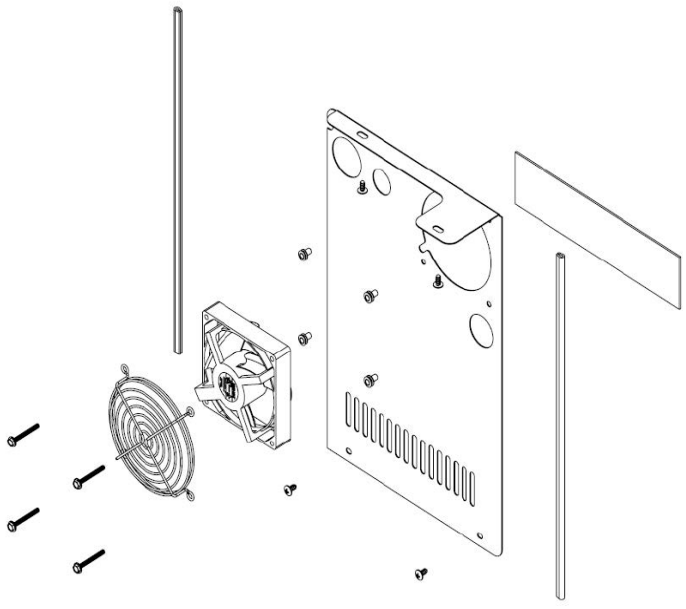

9. Remove and replace fan. Take special care to properly route fan wire.

NOTE

Fan must be oriented to pull air in through lower evaporator cover vents and push air out at fan mounting location.

10. Installation is the reverse of removal.
11. Care must be taken to assure the bottom of the evaporator cover is reinstalled behind the front edge of the train trough.
12. Use sealant gum to seal any openings at rear of unit before replacing rear cover.
13. Reinstall unit taking care to level, space and secure as found.

REPLACE ICE MAKER

Replace Ice Maker

The new ice maker assembly you have received will have a plug-in connection.

Remove Ice Maker

1. Unplug the unit.

⚠ WARNING

SHOCK HAZARD — Never attempt to repair or perform maintenance on the unit until the electricity has been disconnected.

2. Disconnect ice maker wire harness at plug.
3. Disconnect thermistor plug.
4. Remove water inlet tube.
5. Remove three screws from wall of freezer housing.
6. Remove ice maker assembly.

Install Ice Maker

1. Use three screws to mount new ice maker assembly to wall of freezer housing.
2. Reconnect plug.
3. Reconnect thermistor plug.
4. Insert water inlet tube.
5. Apply Permagum® to all exit holes.
6. Install back panel.
7. Plug in and test unit.

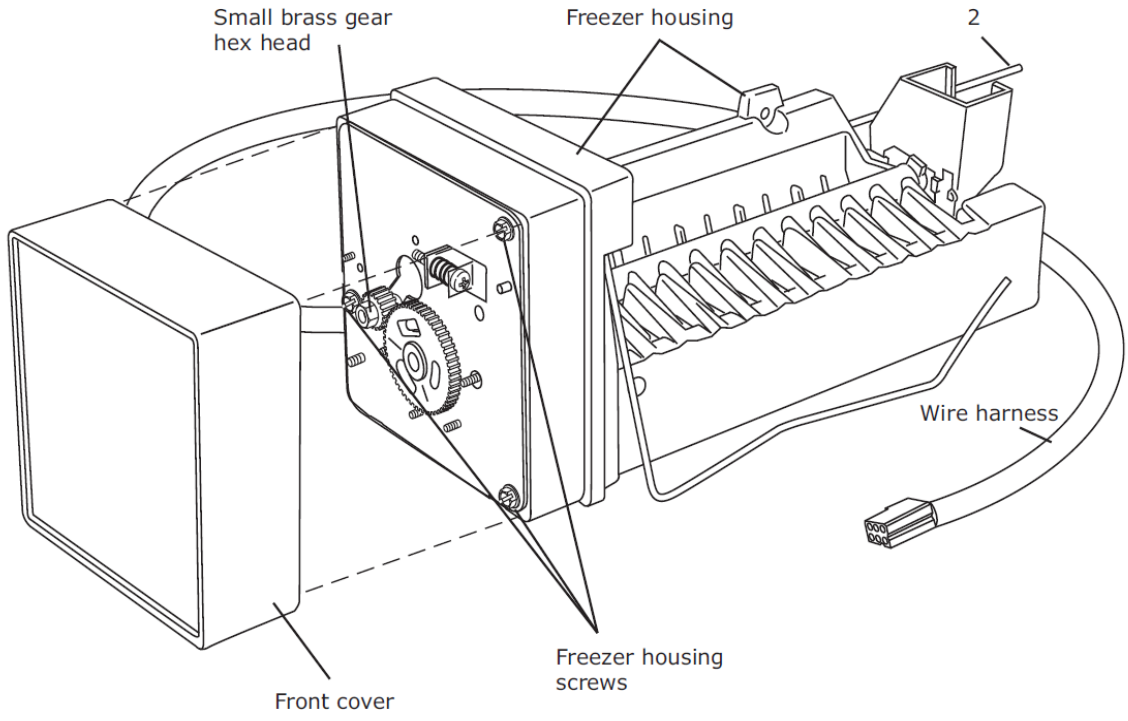

Marvel Refrigeration (Marvel) Limited Warranty

ONE YEAR LIMITED PARTS & LABOR WARRANTY

For one year from the date of original purchase, this warranty covers all parts and labor to repair or replace any part of the product that proves to be defective in materials or workmanship. For products installed and used for normal residential use, material cosmetic defects are included in this warranty, with coverage limited to 60 days from the date of original purchase. All service provided by Marvel under the above warranty must be performed by a Marvel factory authorized servicer, unless otherwise specified by Marvel. Service provided during normal business hours.

TWO YEAR LIMITED PARTS & LABOR WARRANTY (MARVEL PROFESSIONAL PRODUCTS)

For two years from the date of original purchase, this warranty covers all parts and labor to repair or replace any part of the product that proves to be defective in materials or workmanship. For products installed and used for normal residential use, material cosmetic defects are included in this warranty, with coverage limited to 60 days from the date of original purchase. All service provided by Marvel under the above warranty must be performed by a Marvel factory authorized servicer, unless otherwise specified by Marvel. Service provided during normal business hours.

AVAILABLE THIRD YEAR LIMITED WARRANTY (MARVEL PROFESSIONAL PRODUCTS)

For designated Marvel Professional product, Marvel offers a one year extension of the two year warranty coverage from the date of purchase, free of charge. To take advantage of this third year warranty, you must register your product with Marvel within 60 days from the date of purchase at marvelrefrigeration.com and provide proof of purchase.

LIMITED FIVE YEAR SEALED SYSTEM WARRANTY

For five years from the date of original purchase, Marvel will repair or replace the following parts, labor not included, that prove to be defective in materials or workmanship: compressor, condenser, evaporator, drier, and all connecting tubing. All service provided by Marvel under the above warranty must be performed by a Marvel factory authorized servicer, unless otherwise specified by Marvel. Service provided during normal business hours.

WARRANTY TERMS

These warranties apply only to products installed in any one of the fifty states of the United States, the District of Columbia, or the ten provinces of Canada. The warranties do not cover any parts or labor to correct any defect caused by negligence, accident or improper use, maintenance, instal-lation, service, repair, acts of God, fire, flood or other natural disasters. The product must be installed, operated, and maintained in accordance with the Marvel User Guide.

The remedies described above for each warranty are the only ones that Marvel will provide, either under these warranties or under any warranty arising by operation of law. Marvel will not be responsible for any consequential or incidental damages arising from the breach of these warranties or any other warranty, whether express, implied, or statutory. Some states do not allow the exclusion or limitation of incidental or consequential damages, so the above limitation or exclusion may not apply to you. These warranties give you specific legal rights, and you may also have other rights which vary from state to state.

Any warranty that may be implied in connection with your purchase or use of the product, including any warranty of merchantability or any warranty fit for a particular purpose is limited to the duration of these warranties, and only extends to five years in duration for the parts described in the section related to the five year limited warranty above. Some states do not allow limitations on how long an implied warranty lasts, so the above limitations may not apply to you.

- The warranties only apply to the original purchaser and are non-transferable.
- These warranties cover products installed and used for normal residential use only.
- The warranties apply to units operated outside only if designed for outdoor use by model and serial number.
- Replacement water filters, light bulbs, and other consumable parts are not covered by these warranties.
- The start of Marvel's obligation is limited to four years after the shipment date from Marvel.
- In-home instruction on how to use your product is not covered by these warranties.
- Food, beverage, and medicine loss are not covered by these warranties.
- If the product is located in an area where Marvel factory authorized service is not available, you may be responsible for a trip charge or you may be required to bring the product to a Marvel factory authorized service location at your own cost and expense.
- Units purchased after use as floor displays, and/or certified reconditioned units, are covered by the limited one year warranty only and no coverage is provided for cosmetic defects.
- Signal issues related to Wi-Fi connectivity are not covered by these warranties.

For parts and service assistance, or to find Marvel factory authorized service near you, contact Marvel Refrigeration:
marvelrefrigeration.com • techsupport@marvelrefrigeration.com • 616.754.5601
1260 E. Van Deinse St. Greenville, MI 48838



www.marvelrefrigeration.com

Marvel Refrigeration
1260 E. Van Deinse St.
Greenville MI 48838

616.754.5601

All specifications and product designs subject to change without notice. Such revisions do not entitle the buyer to corresponding changes, improvements, additions, replacements or compensation for previously purchased products.