LG
Life's Good

ENGLISH
ESPAÑOL

OWNER'S MANUAL
BOTTOM FREEZER REFRIGERATOR

Please read this manual carefully before operating your set and retain it for future reference.

MANUAL DE USUARIO
REFRIGERADOR CON CONGELADOR INFERIOR

Lea detenidamente este manual antes de empezar a utilizar el refrigerador y guárdelo como referencia para el futuro.

Model Name/Nombre de Modelo * =color number/número de color

LFXS24623*
GM63SGS

P/No. MFL67227304-2

www.lg.com

TABLE OF CONTENTS

English Version 2
Spanish Version 46

Important Safety Instructions 3-4
Requirements for Ground Connection 4

Parts and Features 5-7

Refrigerator Installation 8-15
Unpacking 8
Installation 8
How to remove and install Handle 9
How to remove and Install the Refrigerator Doors 10
How to remove and Install Pull-Out Drawer 13-14
Closing and Aligning the doors 15

Using your Refrigerator 16-27
Control Panel Features 16
The LED Display 17
Adjusting the temperatures and display 18
Operating the dispenser 19
Setting the functions 20
Spaceplus Ice System 21
Automatic Icemaker 22
Adjusting Control Settings 23
Food Storage Guide 23
Storing Frozen Food 23
Refrigerator Section 24-26
Refrigerator Shelves 24
Crisper Humidity Control 25
Door Racks 26
Dairy Compartment 26
Dispenser Drip Tray 26
Freezer Section 27
Ice Bin 27
DuraBase 27
Durabase Divider 27
Pull Out Drawer 27

Refrigerator Care and Cleaning 28-34
Refrigerator Cleaning 28
Outside 28
Inside Walls 28
Door Lining & Gaskets 28
Plastic Parts (Covers and Panel) 28
Back Cover 28
Replacing Lights 28
Power Interruptions 29
When Going on Vacation 29
When Moving 29
Water Filter (Type 1) 30
Performance Data Sheet (Type 1) 32
Certificate for California 34

Connecting the Water Line 35-37
Troubleshooting Guide 38-40
Smart Diagnosis 41
Warranty 42-43

THANK YOU!

Congratulations on your purchase and welcome to the LG family.
Your new LG French Door Refrigerator combines advanced cooling technology with simple operation and high efficiency. Follow the operating and care instructions in this manual and your refrigerator will provide you with many years of reliable service.

IMPORTANT SAFETY INSTRUCTIONS

SAFETY MESSAGES

This manual contains several important safety notices. Always read and obey all of the following safety messages.



This is the safety alert symbol. This symbol is a warning to potential dangers that could cause death, injury or damage to you, others or the product. All safety messages will follow after this warning symbol and the word "DANGER", "CAUTION" or "WARNING". These words mean:

⚠ DANGER — You may be killed or suffer fatal damage if you do not follow instructions.

⚠ WARNING — You may be killed or seriously injured if you do not follow instructions.

⚠ CAUTION — Indicates a potentially hazardous situation which, if not avoided, may result in minor injury or damage to the product.

All safety messages inform you of potential danger, advise you on how to reduce the risk of injury and tell you what can occur if the instructions are not followed.

⚠ WARNING

To reduce the risk of fire, electrical shock or personal injury, the following precaution measures should be followed:

- NEVER disconnect the refrigerator by pulling the power cord, always grip the plug firmly and disconnect it directly from the outlet.
- Repair or replace immediately all faulty or damaged service cables. Do not use cords that have cracks or abrasion damage on the length of the cord or on the plug.
- When moving your refrigerator, take care not to roll over the electrical cord.
- **DO NOT** store or use gasoline or other combustible liquids or vapors in proximity with this or any other electrical appliance.
- **DO NOT** permit children to climb, stand or swing from the doors or shelves of the refrigerator. This can cause serious injury to them and damage to the product.
- Keep your fingers away from areas in which they can become caught, such as the doors, hinges and cabinets. Be careful closing the doors when children are near.
- Unplug the refrigerator before cleaning or repairing. **NOTE:** We strongly recommend that any repair services be performed by a qualified professional.
- **DO NOT** store explosive substances such as aerosol cans with a flammable propellant in this appliance.

  If the use of this unit is no longer needed, please contact local authorities to dispose of this product in a safe way due contains Pentane-cycle or pentane like gas for insulation. Insulation gases require a special elimination process. This product contains flammable insulation.
- Do not keep bottles in the freezer compartment, they could explode after freezing and cause damage.
- For your safety, this product should be properly grounded. Have a qualified professional check the electrical circuit and outlet to ensure a proper ground connection.
- Read all instructions before utilizing the product. Utilize this product only as explicitly expressed in this guide.
- Once the refrigerator is operating, avoid touching cold surfaces of the freezer with damp or wet hands; the skin could become adhered to these surfaces.
- In refrigerators with an automatic ice dispenser, avoid contact with moving parts of the ejector mechanism or with the heating mechanism that discharges the cubes. **DO NOT** place your fingers or hands in the ice dispenser mechanism while the refrigerator is connected.
- **DO NOT** refreeze foods which have already thawed.

The United States Department of Agriculture in Home and Garden Bulletin No. 69 says:

"...You may refreeze food that has thawed if they contain ice crystals or are cold and below 40 °F (4 °C)".

"...Ground beef, perishable food or seafood that is discolored or has an unpleasant odor should not be frozen or consumed. Consumption of melted ice cream should also be avoided. If the odor or color of food is questionable, discard it. The food may be dangerous to consume".

"Partial thawing or refreezing reduces the quality of the food, especially fruit, vegetables and prepared meals. The quality of red meat is less affected than other foods. Use refrozen products as soon as possible in order to maintain their quality".

- This product contains chemicals known to the State of California to cause cancer. **Wash hands after handling.**

KEEP THESE INSTRUCTIONS

⚠ CAUTION

This appliance is not intended for use by children, persons with physical or mental disabilities, persons with reduced sensory or mental capacity, or persons with lack of experience or know-how, unless they have supervision or instruction in relation to the use of the appliance by the person responsible for their safety. Children should be supervised to assure that they do not play with the appliance.

⚠ DANGER: CHILDREN MAY BECOME TRAPPED

Children becoming trapped or suffocated is not a problem of the past. Discarded and abandoned refrigerators are a hazard, even if they remain there "for just a few days". If you would like to dispose of your old refrigerator, please follow the instructions below to prevent any accidents.

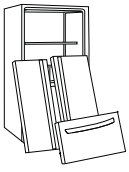

BEFORE DISPOSING YOUR REFRIGERATOR OR FREEZER WHEN NO LONGER IN USE:

- Remove the doors.
- Leave the shelves in place so that children cannot easily become stuck in them.

⚠ WARNING

Keep away from moving drawers.

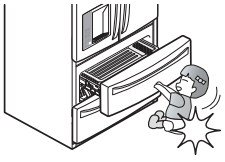

- Small children can be knocked down.
- Fingers and toes can be injured.

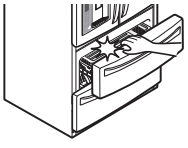

Do not sit or climb on drawers.

- Refrigerator can tip over.



CFC DISPOSAL

Your old refrigerator may have a cooling system that uses CFC's (chlorofluorocarbons). CFC affects the stratospheric layer of the ozone.

If you decide to throw out your old refrigerator, ensure that CFC contaminants are properly disposed of by a qualified professional. If you intentionally remove the CFC refrigerant, you could be subject to fines or prison in accordance with environmental legislation in effect.

REQUIREMENTS FOR GROUND CONNECTION

IMPORTANT: Attentively read the following.

TO CONNECT ELECTRICITY

⚠ WARNING

ELECTRICAL SHOCK HAZARD

FOR YOUR PERSONAL SAFETY, this appliance must be properly grounded. Have a qualified electrician check your wall outlet to ensure that the plug is grounded properly.

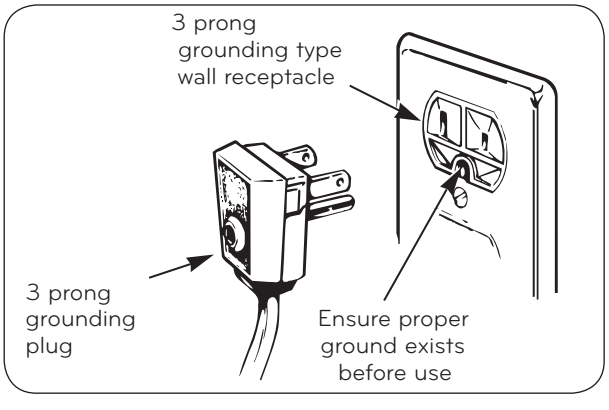

RECOMMENDED GROUNDING METHOD

Your refrigerator must always be plugged to its own outlet which is adequately grounded. The energy current should only be 115 V ~ 60 Hz, AC or 127 V ~ 60 Hz, AC (according to the National rating). This provides the best performance and prevents an overload which could cause a fire from the overheating of the cables.

It is recommended that a separate circuit be used for this appliance, as well as a receptacle that cannot be disconnected with a switch.

Do not use an extension cable. It is your responsibility and obligation to replace two-prong outlets with that of an adequately grounded three-prong outlet.
Do not, under any circumstance, cut or extract the third prong from the plug.

NOTE: Before installation, cleaning or replacing light bulbs, you must disconnect the appliance from the power source. When finished, plug the appliance back in and adjust the thermostat to the desired position.

USE OF EXTENSION CABLES

We do not recommend the use of extension cables. However, if you still choose to utilize an extension cable, it is absolutely necessary that it is listed in the UL (in the United States) or CSA (in Canada), that it supports three-pronged plugs and that the electrical current support a minimum of 15 A and 120 V.

The use of an extension cable will increase the amount of space needed behind the refrigerator.

⚠ WARNING

REPLACING ELECTRICAL CABLE

If the power cord is damaged, it must be replaced by our service center or qualified LG technician to avoid any risk.

SPECIAL FEATURES

1 CONTROL PANEL LED DISPLAY SCREEN
Simple electronic controls are user-friendly. The LED screen shows refrigerator and freezer temperatures, displays water filter status, dispenser information, and more.

2 ICE PLUS
When this feature is activated, the freezer section will run at the coldest temperature for a 24- hour period to increase ice production.

3 FILTERED WATER AND ICE DISPENSER
The water dispenser offers fresh, chilled, filtered water through the door. The ice dispenser offers cubed or crushed ice.

4 DOOR ALARM
A warning alarm sounds at 30-second intervals when the refrigerator or freezer door is left open for more than 60 seconds.

5 SPACEPLUS ICE SYSTEM
The icemaker automatically produces 80–130 ice cubes in a 24-hour period to keep the ice dispenser fully supplied. The in-door design creates more shelf space.

6 CRISPERS
LG's crispers preserve humidity and help vegetables stay crisp.

7 GLIDE'N'SERVE (In some models).
Provides storage space with a variable temperature control that keeps the compartment colder than refrigerator.

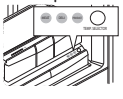

8 MULLION
The door mullion folds in when the left door is opened.

9 AUTO CLOSING HINGE
When you slightly push the door of the refrigerator, it is automatically closed. (The door is automatically closed within 30° of the opening angle.)

10 FRESH AIR FILTER
The Air Filter helps remove odors from the refrigerator.

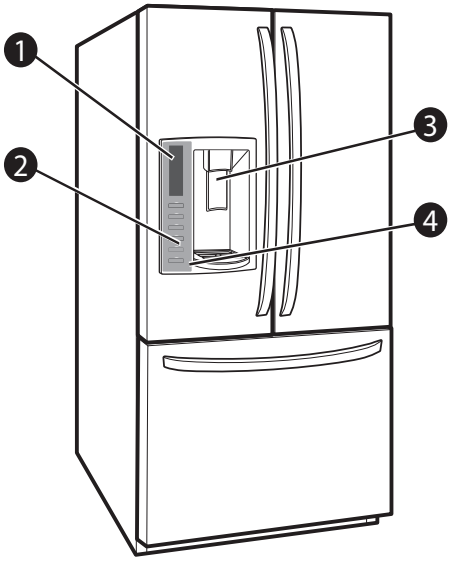

*** Note: Reference image only**

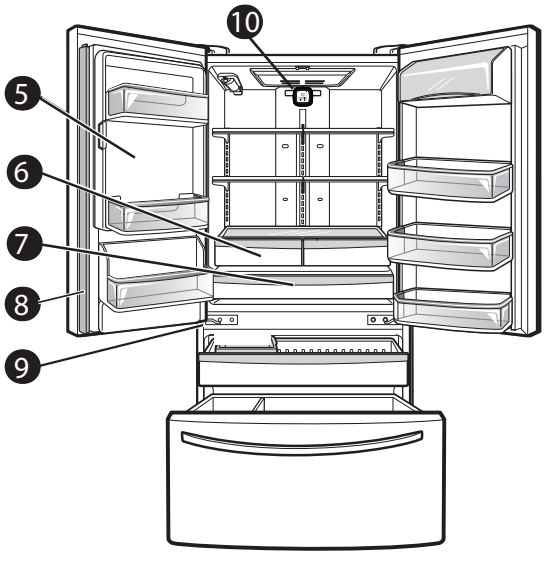

*** Note: Reference image only**

NOTE: This guide covers several different models. The refrigerator you have purchased may have some or all of the items listed below. The locations of the features shown below may not match your model.

KEY PARTS AND COMPONENTS

In addition to the special features and components outlined in the **Special Features section**, there are several other important components that are referenced in this manual.

1. **ADJUSTABLE REFRIGERATOR SHELVING**
   The refrigerator compartment shelves are adjustable to allow flexibility for storage needs.

2. **GALLON STORAGE BINS**
   Three interchangeable bins can be arranged to suit your storage needs.

3. **REMOVABLE ICE STORAGE BIN**
   The ice storage bin can be removed to fill ice buckets, coolers, or pitchers.

4. **LED INTERIOR LAMPS**
   Refrigerator interior is lit by the LED array.

5. **CAN STORAGE BIN**

6. **FIXED DOOR BINS**

*7. **FRESH AIR FILTER (on some models)**
   The Fresh Air Filter helps remove odors from the refrigerator.

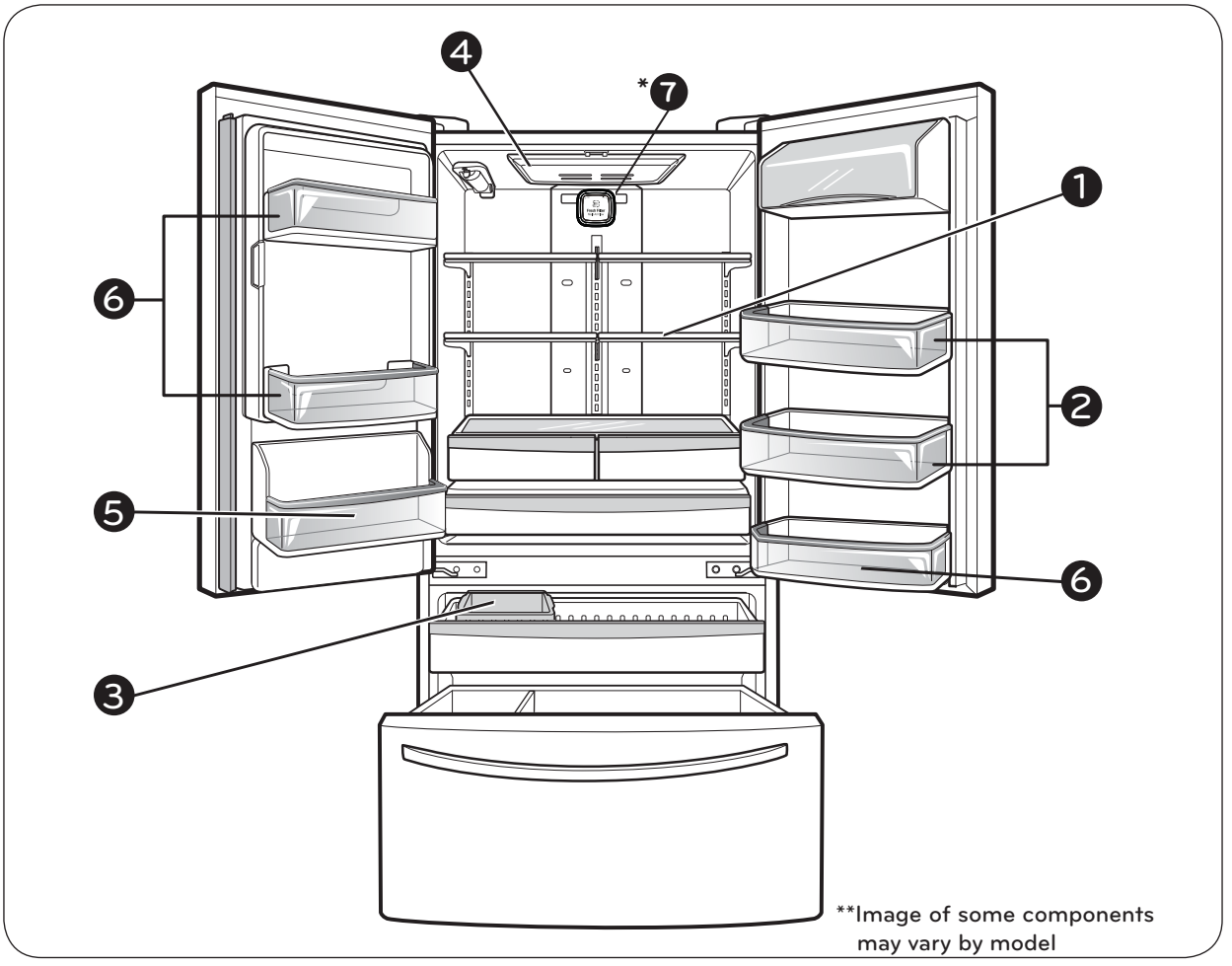

**Image of some components may vary by model

⚠ WARNING

EXCESSIVE WEIGHT HAZARD

Use the assistance of two or more persons to move or install the refrigerator. Not following these instructions may cause injury to the back and other parts of the body.

UNPACKING

Before installing your refrigerator, remove any tape or temporary stickers. Do not remove any stickers that feature warnings, the model serial number or the technical label of the product located on the back of the refrigerator.

To remove adhesive tape residue, rub it well with your fingers and a little liquid detergent. Clean with warm water and let dry.

Do not use sharp instruments, rubbing alcohol, flammable liquids or abrasive cleaning products to remove the adhesive tape or glue. These products can damage the surface of your refrigerator. For more information, see the section on **"Important Safety Instructions"**.

The shelves come already installed in their factory position. Remove the shelves and replace them according to your spacing needs.

Moving Your Refrigerator:

Your refrigerator is extremely heavy. Make sure you protect the floor when moving your refrigerator for cleaning or servicing. Always pull your refrigerator straight out when moving it. Do not shift from side to side or "walk" the refrigerator when attempting to move it as this can cause damage to the floor.

⚠ WARNING

EXPLOSION HAZARD



Keep all flammable materials and vapors (such as gasoline) away from the refrigerator. Not following these instructions may cause death, explosion or fire

INSTALLATION

1. Avoid placing the unit near heat sources, direct sunlight, or humidity.
2. To avoid vibration, the unit should be leveled. If needed, adjust the leveling screws to compensate for an unleveled floor. The front should be slightly taller than the rear to ensure that the doors close properly. The leveling screws can easily be turned by slightly tilting the front of the refrigerator, turning the leveling screws clockwise ( ) to raise it and counter-clockwise ( ) to lower it.
3. Install the refrigerator in an area between 55 °F (13 °C) and 110 °F (43 °C). If the surrounding temperature is lower or higher than previously mentioned, it can adversely affect the unit.

⚠ CAUTION: Avoid placing the unit near heat sources, direct sunlight or humidity.

ONCE INSTALLED

1. Carefully clean your refrigerator and remove and dust accumulated during shipping.
2. Install accessories such as the ice bin, door racks, shelves, etc., in their proper places. These are already packed to prevent any possible damage during shipping.
3. Leave your refrigerator on for 2 to 3 hours before storing food inside. Verify that there is a flow of cold air in the freezer compartment to ensure proper cooling. Your refrigerator is now ready for use.

⚠ WARNING:

- Take care when working with the hinges, base cover and stops, etc. You may injure yourself.
- DO not place your hands or any tools in the air vents, the base cover or in the bottom of the refrigerator. This may cause injury or electrical shock.

Keep a Proper Distance from Adjacent Objects

Please keep the refrigerator at an adequate distance from other objects. Insufficient spacing can reduce the refrigerator's freezing efficiency and increase electricity consumption.

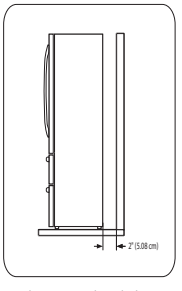

Note:

This appliance is intended to be used in household and similar applications such as

– Staff kitchen areas in shops, offices and other working environments;

– Farm houses and by clients in hotels, motels and other residential type environments;

– Bed and breakfast type environments;

– Catering and similar non-retail applications.

REFRIGERATOR INSTALLATION

TOOLS YOU MAY NEED

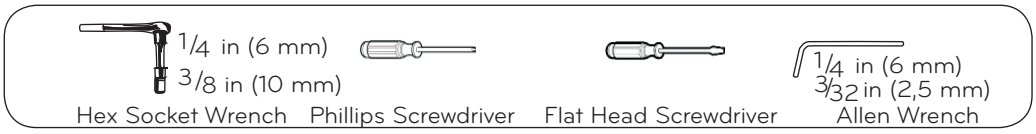

NOTE: It is always recommended that the doors be removed when it is necessary to move the refrigerator through a narrow opening. If it is necessary to remove the handles follow the directions below.
NOTE: Handle appearance may vary from illustrations on this page.

DOOR HANDLE REMOVING

1. Removing Refrigerator Handle

Loosen the set screws with the 3/32 in (2,5 mm) Allen wrench and remove the handle.

- **NOTE:** If the handle mounting fasteners need to be tightened or removed, use a 1/4 in (6,4 mm) Allen wrench.

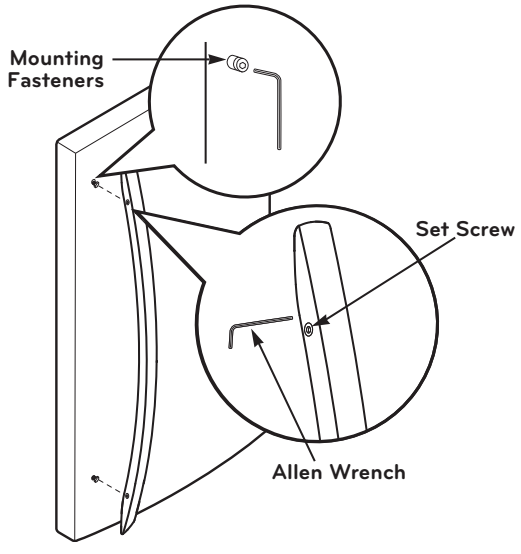

2. Removing Freezer Drawer Handle

Loosen the set screws located on the lower side of the handle with the 3/32 in (2,5 mm) Allen wrench and remove the handle.
NOTE: If the handle mounting fasteners need to be tightened or removed, use a 1/4 in (6,4 mm) Allen wrench.

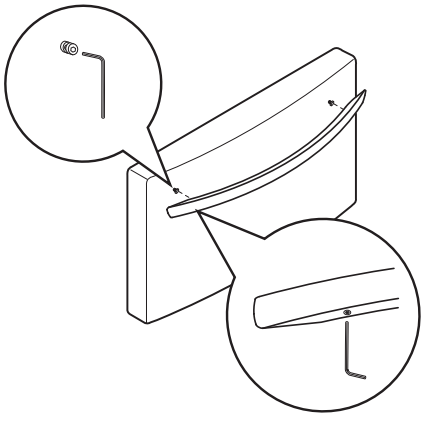

DOOR HANDLE INSTALLATION

1. Reinstalling Refrigerator Handle

Place the handle on the door by aligning handle footprints to fit mounting fasteners and tighten the set screws with a 3/32 in (2,5 mm) Allen wrench.
NOTE: If the handle mounting fasteners need to be tightened or removed, use a 1/4 in (6,4 mm) Allen wrench.

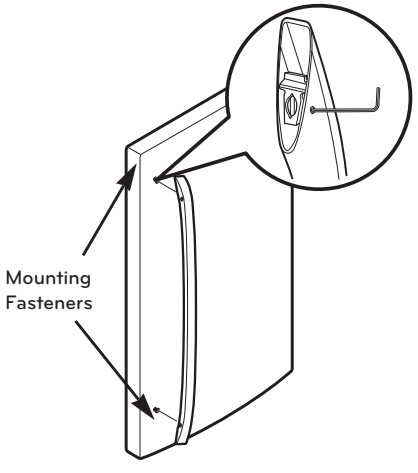

2. Reinstalling Freezer Drawer Handle

Place the handle on the door by aligning handle footprints to fit mounting fasteners and tighten the set screws on the bottom of the handle with a 3/32 in (2,5 mm) Allen wrench.
NOTE: If the handle mounting fasteners need to be tightened or removed, use a 1/4 in (6,4 mm) Allen wrench.

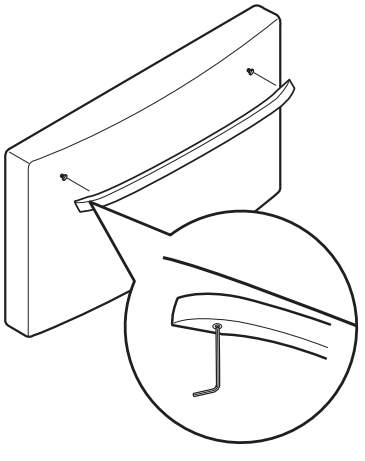

HOW TO REMOVE AND INSTALL REFRIGERATOR DOOR

1. Removing Refrigerator Doors

Remove the left-side door first.

NOTE: Handle, top hinge and hinge cover appearance may vary from illustrations on this page.

⚠ WARNING

- Disconnect electrical supply to the refrigerator before installing. Failure to do so could result in death or serious injury.
- Do not put hands or feet or metal sticks into the air vents, base grille, or bottom of the refrigerator. You may be injured or receive an electrical shock.
- Be careful when you work with the hinge, base grille, and stopper. You may be injured.

⇪ Left Door

- Pull the water tube out of the fitting while pressing the release ring on the fitting (1).
  NOTE: When you pull out the tube, first you have to push the collet by opposite direction of arrow in the upper picture and pull the tube out by direction of arrow.
- Open the door. Remove the top hinge cover screw (2).
- Use a flat blade screwdriver to lift the tabs on the front underside of the cover (3). Lift up the cover.
- Remove the cover. Pull out the tube (4).
- Disconnect all wire harness (5).
- Remove the grounding screw(6).
- Rotate hinge lever (7) counterclockwise. Lift the top hinge (8) free of the hinge lever latch (9).
- Place the door on a non-scratching surface with the inside up.

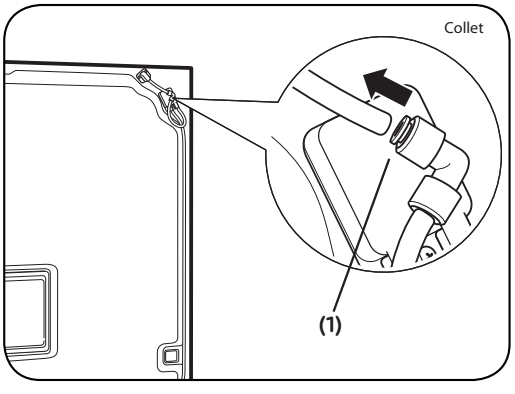

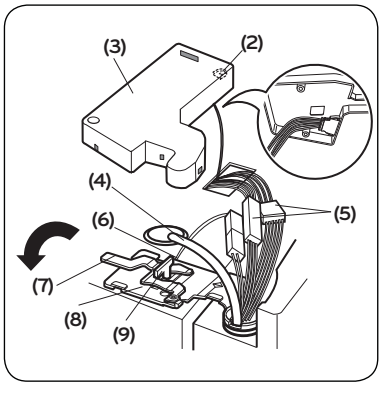

⇪ Right Door

- Open the door. Remove the top hinge cover screw (10).
- Use a flat blade screwdriver to lift the tabs on the front underside of the cover (11). Lift up the cover.
- Rotate hinge lever (12) clockwise. Lift the top hinge (13) free of the hinge lever latch (14).
- Place the door on a non-scratching surface with the inside up.

⚠ **CAUTION:** When lifting the hinge free of the latch, be careful that the door does not fall forward.

- Lift the door from the middle hinge pin and remove the door.
- Place the door, inside facing up, on a nonscratching surface.

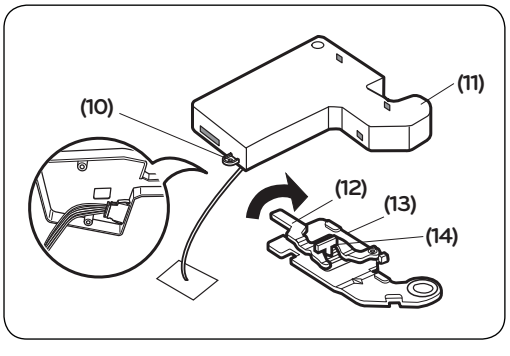

HOW TO REMOVE AND INSTALL REFRIGERATOR DOOR (CONT.)

2. Refrigerator Door Reinstallation

Install the right-side door first.

▸ **Right Door**

- Lower the door onto the middle hinge pin (1).
- Make sure the door is aligned with the cabinet.
- Fit the top hinge (2) over the hinge lever latch (3) and into place. Rotate the lever (4) counterclockwise to secure the hinge.
- Hook the tab on the door-switch side of the cover (5) under the edge of the wire opening in the cabinet top.
- Position the cover into place.
- Insert and tighten the cover screw (6).

▸ **Left Door**

- Lower the door onto the middle hinge pin (7).
- Make sure the door is aligned with the cabinet.
- Fit the top hinge (8) over the hinge lever latch (9) and into place. Rotate the lever (10) clockwise to secure the hinge.
- Install the grounding screw (11) and connect all the wire harnesses (12).
- Push the water supply tube (13) into the hole on the top case and pull it through the backplate.

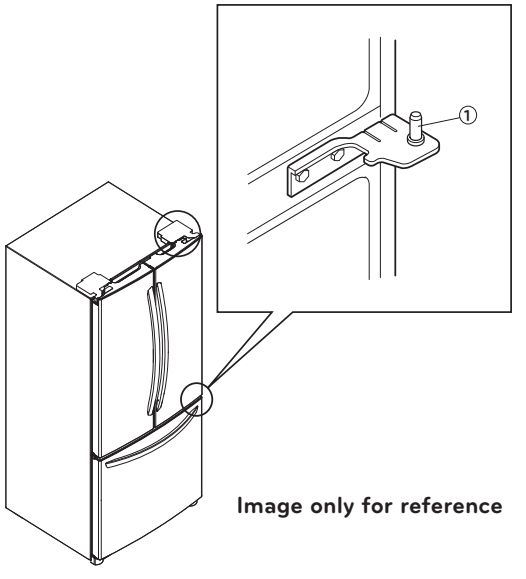

Image only for reference

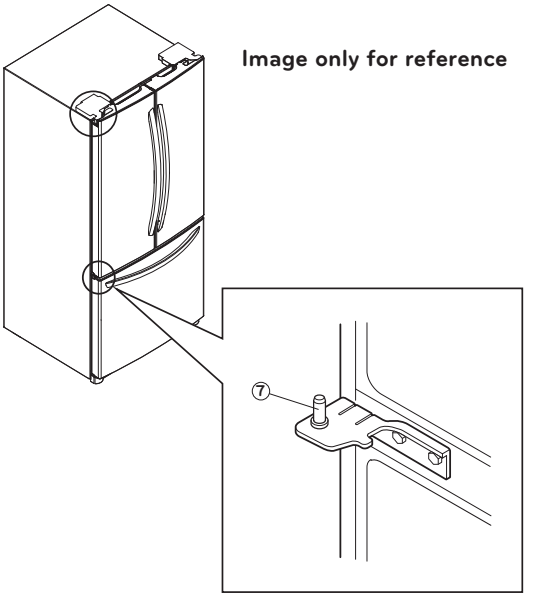

Image only for reference

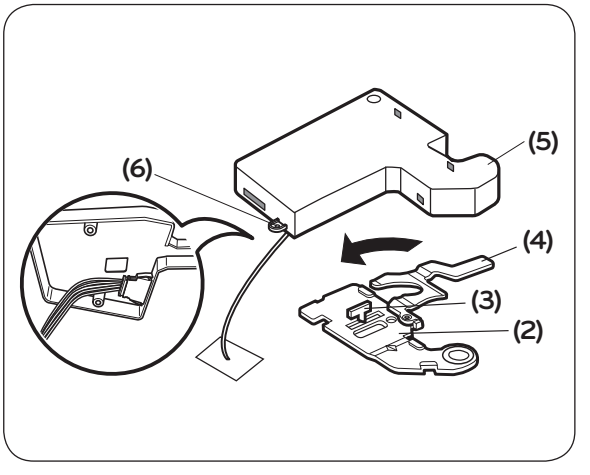

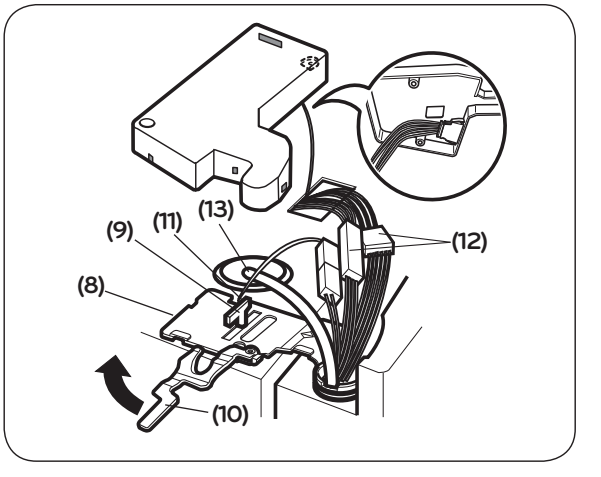

- Insert the water supply tube into the connector.
- Insert the tube at least 5/8 in. (15 mm) into the connector.

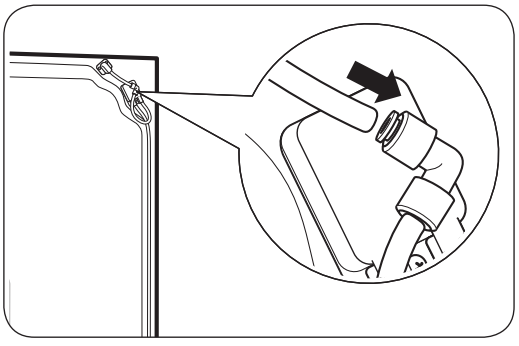

- Hook the tab on the door-switch side of the cover under the edge of the wire opening in the cabinet top.
- Position the cover into place.
- Insert and tighten the cover screw.

⚠ CAUTION

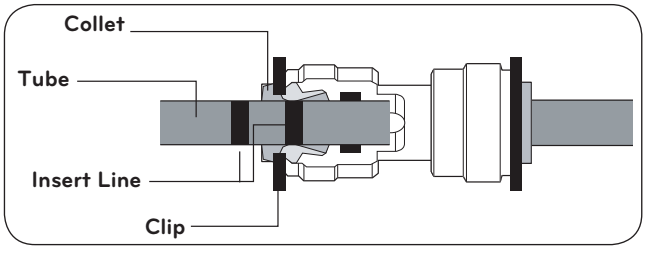

1. Insert the tube until you can see only one of the lines printed on the tube.
2. After inserting, pull the tube to ascertain that it is secure.
3. Assemble the clip.

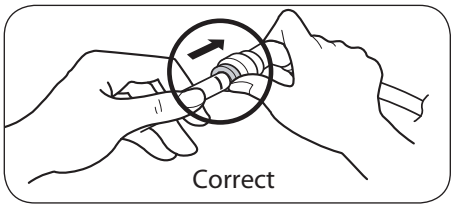

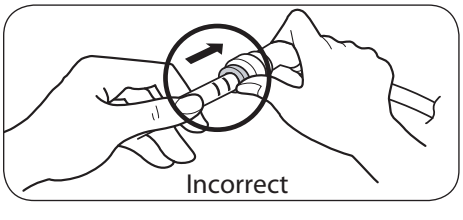

HOW TO REMOVE AND INSTALL THE PULL OUT DRAWER

1. Removing Pull out Drawer

IMPORTANT: To avoid possible injury, product or property damage, you will need two persons to perform the following instructions.

To remove the drawer, push the tabs located on the front inside surface of each rail. Then gently lift the rear left and right sides of the drawer and pull it out (Fig. 1)

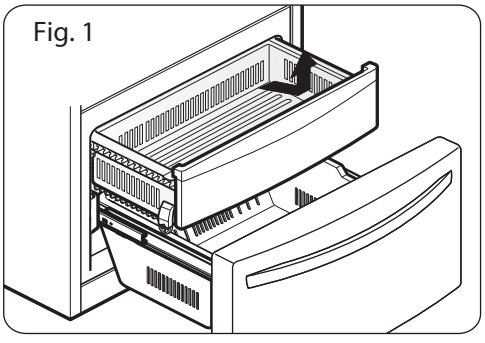

To reinstall, pull out and fully extend both rails. Insert the end of rib in the bracket at left and right. Making sure that the guides at the front are lined up properly, gently push down on both sides (Fig. 2)

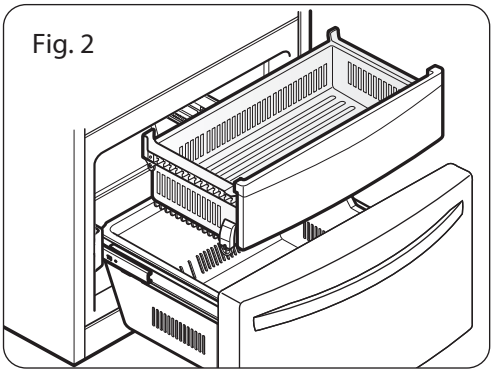

- Pull the drawer open to full lower extension. Remove the durabase by lifting it from rail system. (Fig. 3)

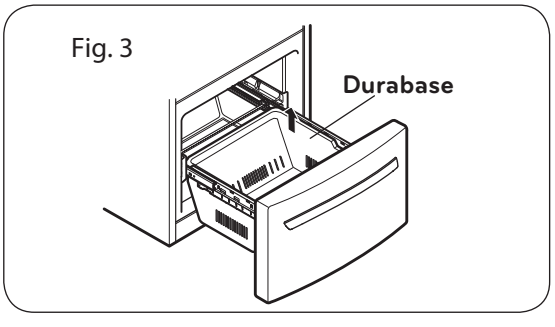

- Remove the screws of the rail on both sides. (Fig. 4)

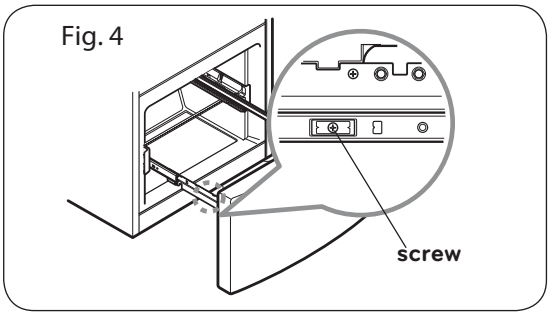

⚠ **CAUTION:** When removing drawer door, do not hold it by the handle. The door could fall down and you may be injured. Grasp the door with both hands as pictured below when removing.

⚠ **CAUTION:** When laying down the drawer, be careful not to damage the floor or hurt your feet with the sharp edges on hinge side.

- With both hands, hold both sides of the door (Fig. 5) and pull it up to separate it from the rails. (Fig. 6)

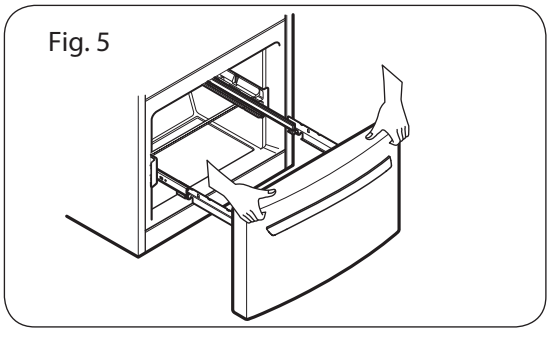

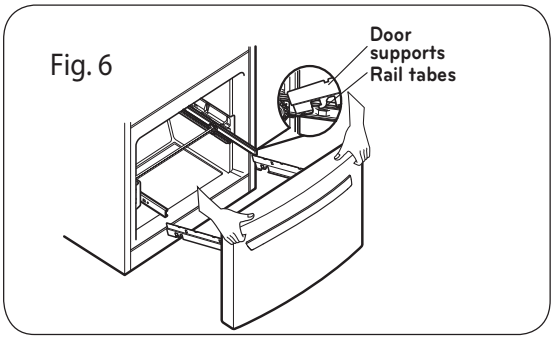

- Push the rails back into drawer cavity. With both hands, hold the center of the bar and push it in so that both rails go back simultaneously. (Fig.7) (Fig. 8)

Fig. 7

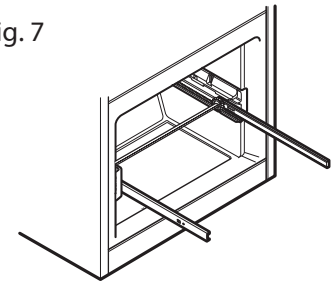

Fig. 8

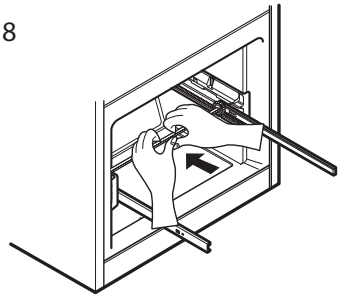

HOW TO REMOVE AND INSTALL THE PULL OUT DRAWER (CONT.)

2. Installing Pull out Drawer

IMPORTANT: To avoid possible injury, product or property damage, you will need two people to perform the following instructions.

- With both hands, hold the center of the bar and pull it out to let both rails out to full extension simultaneously. (Fig. 9)

Fig. 9

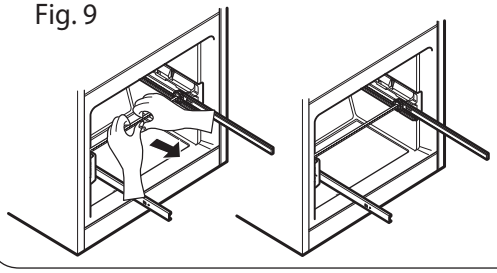

- Hook door supports into rail tabs. (Fig. 10)

Fig. 10

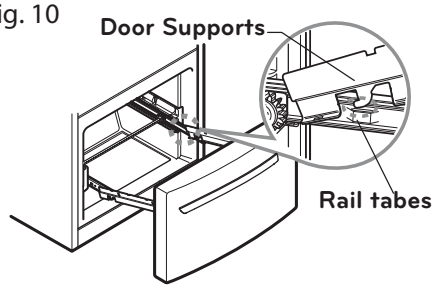

- Lower door into final position and tighten the screws. (Fig. 11)

Fig. 11

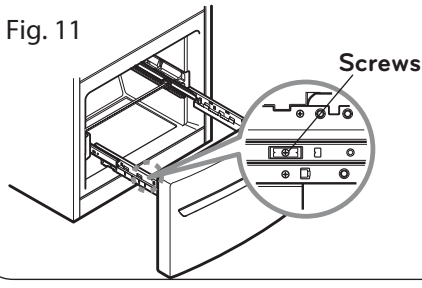

- With the rails pulled out to full extension, insert the durabase in the rail assembly. (Fig. 12)

Fig. 12

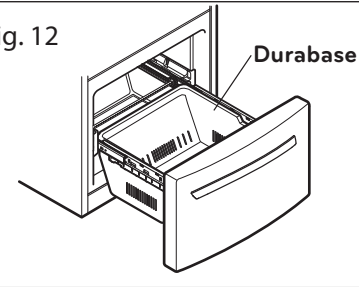

⚠ **WARNING:** To prevent accidental child and pet entrapment or suffocation risk, DO NOT allow them to play inside of drawer.

⚠ **WARNING:** DO NOT step or sit down on Freezer Drawer.

CLOSING AND ALIGNING THE DOORS

Closing the Doors

Your refrigerator has two front leveling screws, one on the right and one on the left. If your refrigerator seems unstable or if you would like the doors to close more easily, simply adjust the inclination of the refrigerator by following the instructions below:

1. Plug the refrigerator into a 3 prong grounded outlet. Move the refrigerator into its final position.
2. Use a flat head screwdriver to adjust the leveling screws, turning clockwise to raise the side of the refrigerator and counter-clockwise to lower it. It may take several turns to adjust it to the inclination you would like.

NOTE: Having someone push against the top of the refrigerator takes some weight off the leveling screws. This will make it easier to adjust the screws.

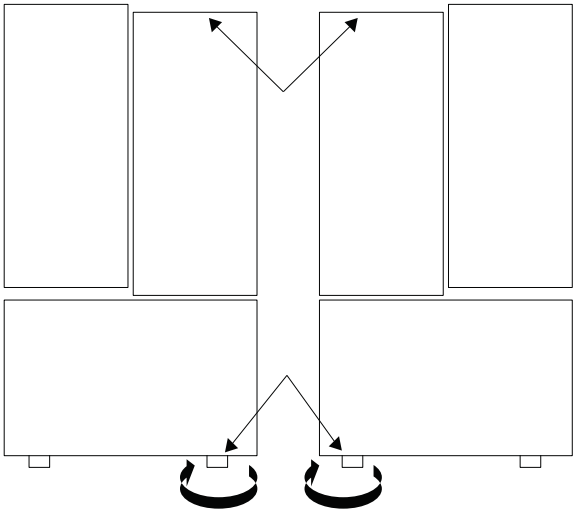

Image only for reference.

3. Open both doors again and check to make sure that they close easily. If not, slightly tilt the refrigerator further back by turning both leveling screws clockwise. It may take several more turns. Make sure that you turn both leveling screws the same amount.
4. Ensure that the refrigerator is even by using a level.

NOTE: Your new refrigerator is uniquely designed with two fresh food doors. Either door can be opened or closed independently of one another. You may have to exert slight pressure on doors to get them to close completely.

Aligning the Doors

To adjust the height of the doors, use the wrench (Included with the User Manual) to adjust the bolt in the door hinge (counter clockwise to raise or clockwise to lower)

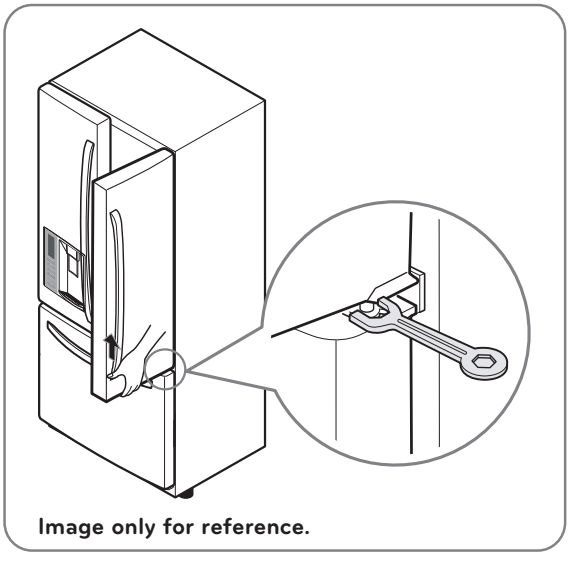

Image only for reference.

When moving your refrigerator

Note: Your refrigerator is extremly heavy. When moving the refrigerator for installing, cleaning or service be sure to follow the next instructions.

1. Adjust leveling legs up.

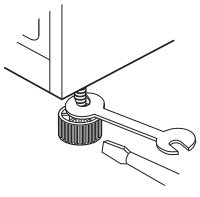

2. Cover the floor with cardboard or hardboard to avoid floor damage.
3. Always pull or push the refrigerator straight out when moving it. Do not wiggle or "walk" the refrigerator when trying to move it, as floor damage could occur.

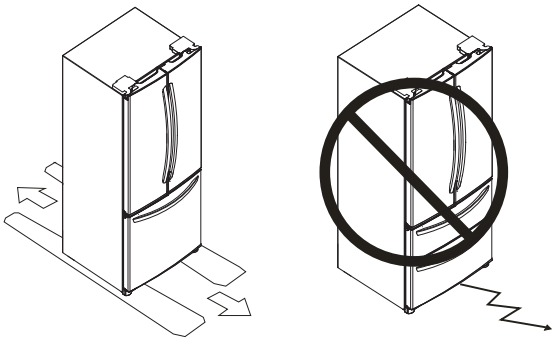

Image only for reference.

CONTROL PANEL FEATURES

NOTE: The shape of the buttons may not match your model.

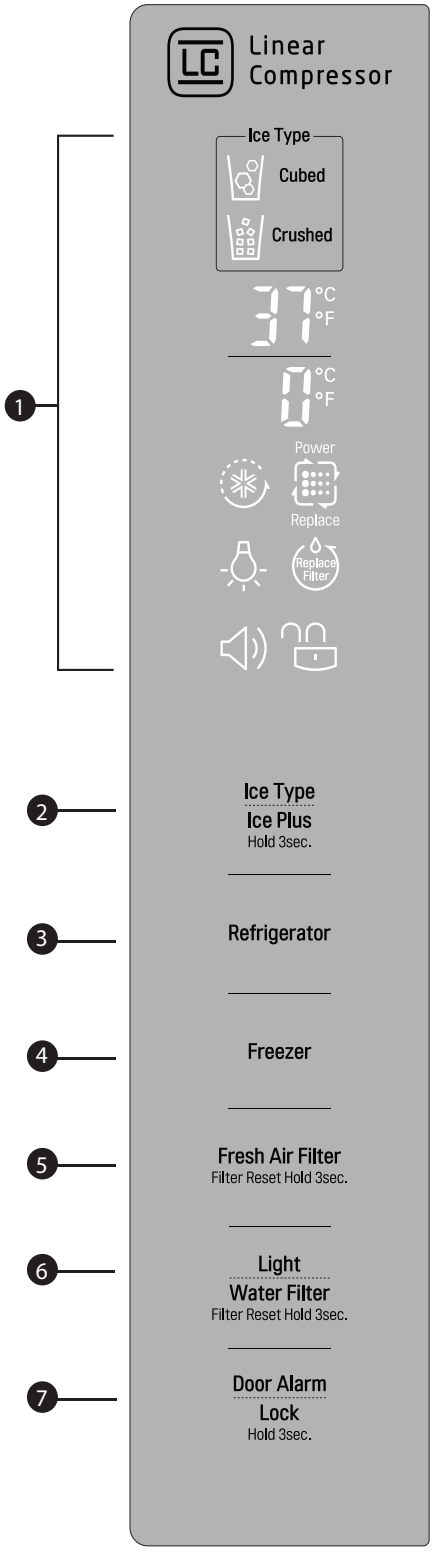

1 LED DISPLAY

The **LED** display shows the temperature settings, dispenser options, water filter, door alarm, and locking status messages.

2 ICE TYPE / ICE PLUS

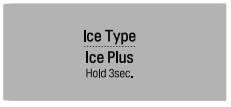

The **ICE TYPE / ICE PLUS** button is used to select Cubed Ice or Crushed Ice. Press and hold this button for at least 3 seconds to activate or deactivate the Ice Plus mode.

3 REFRIGERATOR BUTTON

Press the **REFRIGERATOR** button to adjust the temperature in the refrigerator compartment.

NOTE: When pressed simultaneously with the **FREEZER** button for more than five seconds, the temperature display will change from Fahrenheit to Celsius or vice versa.

4 FREEZER BUTTON

Press the **FREEZER** button to adjust the temperature in the freezer compartment.

NOTE: When pressed simultaneously with the **REFRIGERATOR** button for more than five seconds, the temperature display will change from Fahrenheit to Celsius or viceversa.

5 FRESH AIR FILTER BUTTON (in some models)

Press this button to control the Air Filter Function to remove odors from the refrigerator.

Press and hold the **FRESH AIR FILTER** button for more than 3 seconds to reset the filter indicator after the air filter has been replaced.

6 LIGHT/WATER FILTER BUTTON

The **LIGHT / WATER FILTER** button controls the lamp in the dispenser.

Press and hold the **LIGHT / WATER FILTER** button for more than 3 seconds to reset the filter indicator after the water filter has been replaced.

7 DOOR ALARM/LOCK BUTTON

Press this button to control the door-open alarm. Press and hold this button at least 3 seconds to lock or unlock all the other function buttons on the control panel, including operation of the dispenser.

THE LED DISPLAY

The LED display shows the temperature settings, dispenser options, water filter, door alarm, and locking status messages.

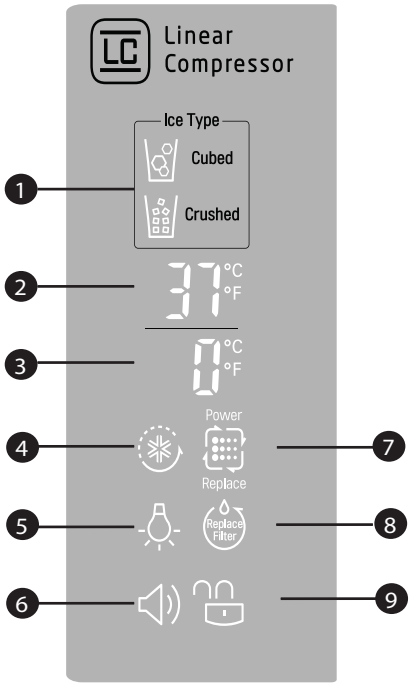

1 DISPENSER SELECTION INDICATOR
Shows Cubed ice or Crushed Ice selection that will be dispensed when the push switch is pressed.

2 REFRIGERATOR TEMPERATURE
Indicates the set temperature of the refrigeratorcompartment in Celsius or Fahrenheit.

3 FREEZER TEMPERATURE
Indicates the set temperature of the freezer compartment in Celsius or Fahrenheit.

4 ICE PLUS
When the **ICE PLUS** button is pressed, the display will indicate the selected function has been activated.

5 DISPENSER LIGHT INDICATOR
When the **LIGHT** button is pressed, the display will indicate the selected function: The dispenser light is on, this indicator will appear on the display panel.

6 DOOR ALARM INDICATOR
This indicator shows that the door-open warning alarm is activated.

7 AIR FILTER BUTTON (on some models)
This indicator shows the air filter is activated.

8 WATER FILTER STATUS
This indicator shows the current status for the water filter. See Resetting the Filter Indicator.

9 LOCK STATUS
This indicator shows the current status for the control panel functions is set to LOCK.

⚠ CAUTION

Display mode setting and its cancellation

• With the refrigerator door open, keep pressing the **REFRIGERATOR** button and **ICE TYPE / ICE PLUS** button more than 5 seconds, then it goes to the display mode.
(Display will show the word "OFF").
• Perform the same way again to cancel the display mode.
• All freezing units do not work at the display mode.

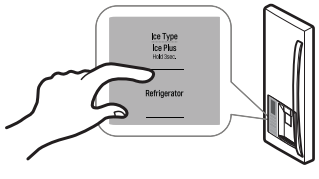

ADJUSTING THE TEMPERATURES AND DISPLAY

Adjust Freezer Temperature
To adjust the temperature in the freezer compartment, press the **FREEZER** button to cycle through the the range of available settings.



Adjust Refrigerator Temperature
To adjust the temperature in the refrigerator compartment, press the **REFRIGERATOR** button to cycle through the range of available settings.

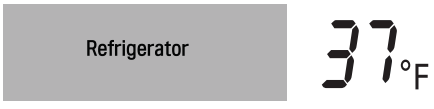

NOTE: The actual inner temperature varies depending on the food status, since the indicated temperature setting is the target temperature and not the actual temperature within the refrigerator.
Initially set the REFRIGERATOR CONTROL at 37 °F (3°C) and the FREEZER CONTROL at 0°F (-18°C). Leave them at these setting for 24 hours (one day) to stabilize. Then adjust the compartment temperature as illustrated above.

TEMPERATURE DISPLAY

To change the temperature display from Fahrenheit to Celsius:

- Simultaneously press and hold the **FREEZER** and **REFRIGERATOR** buttons for more than 5 seconds.
- Do the same to convert back to Fahrenheit.

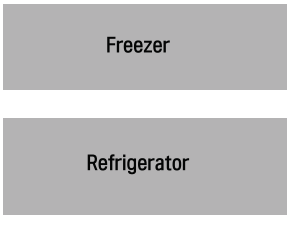

POWER SAVING MODE (in some models)

- The display will remain off until the next time the door is opened.
- The display will also turn on when any button is pressed, and it will remain on for 20 seconds after the last door opening or button selection.
- To deactivate the Power-Saving Mode, press the **FREEZER** and I**CE TYPE / ICE PLUS** buttons simultaneously and hold them for 5 seconds until the tone sounds.

NOTE: Power Saving Mode function is set on the product.

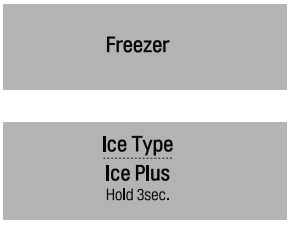

CAUTION WHEN CLOSING THE DOOR

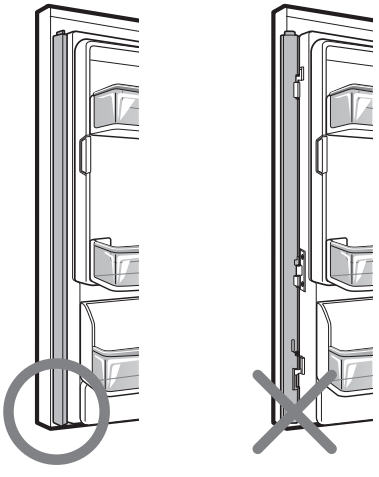

⚠ CAUTION

To reduce the risk of door scratches, please make sure that the refrigerator door mullion is always folded in.

OPERATING THE DISPENSER

DISPENSING CRUSHED ICE

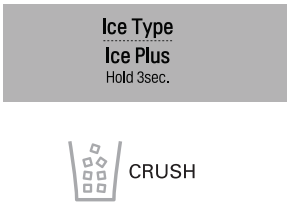

Press the **ICE TYPE / ICE PLUS** button to illuminate the Crushed Ice icon.
Press the push ice switch with a glass or other container and crushed ice will be dispensed.

DISPENSING CUBED ICE

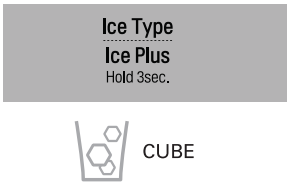

Press the **ICE TYPE / ICE PLUS** button to illuminate the Cubed Ice icon.
Press the push switch with a glass or other container and cubed ice will be dispensed.

NOTE: Hold the glass or other container in place for a couple of seconds after dispensing ice or water to catch the last few cubes or drops. The dispenser is designed to not operate while either refrigerator door is open.

DISPENSING WATER



Press the push **WATER** switch with a glass or other container and chilled water will be dispensed.
When the water switch is pressed, the light will be illuminated.

CONTROLLING THE DISPENSER LIGHT

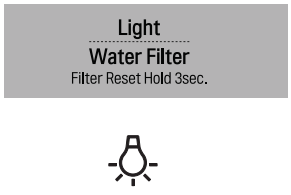

Press the **LIGHT / WATER-FILTER** button to turn the dispenser light on and off.

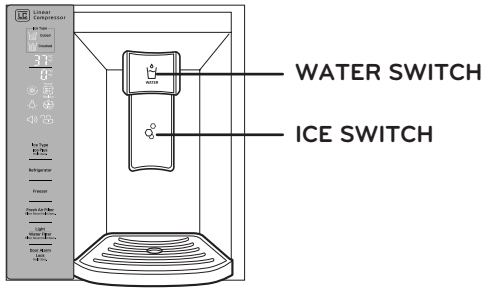

⚠ CAUTION

• When filling container with a small opening, place the container as close as possible to the opening on the water or ice dispenser.
• Do not dispense ice into fine china or crystal glasses. China or crystal can break.

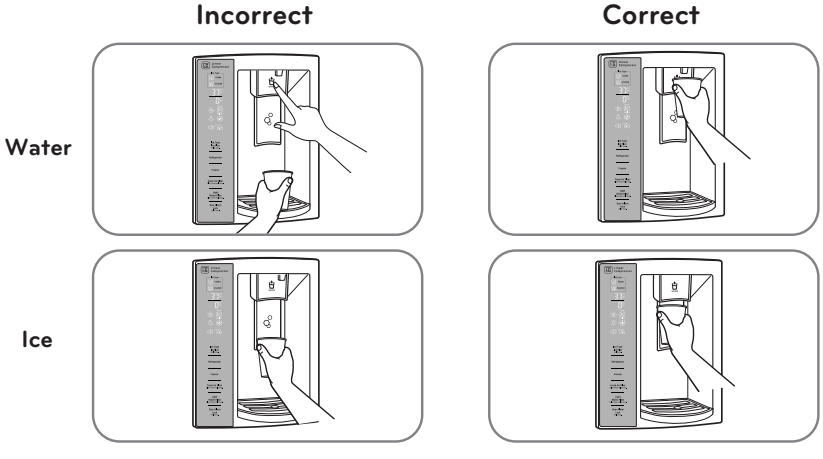

SETTING THE FUNCTIONS

SETTING THE DISPENSER LOCK





Press and hold the **DOOR ALARM / LOCK** button for three seconds to lock the dispenser and all of the other control panel functions. Press and hold again for 3 seconds to unlock.

SETTING THE DOOR ALARM





The **DOOR ALARM / LOCK** button also controls the door alarm that sounds three times in 30-second intervals when a compartment door is left open for more than 60 seconds. The alarm stops sounding when the door is closed.

Press the **DOOR ALARM/LOCK** button once to activate and deactivate the door alarm function.

NOTE: Contact your local service center if the alarm continues to sound after the doors are closed.

RESETTING THE FILTER INDICATOR





Press and hold the **LIGHT / WATER FILTER** button for more than 3 seconds to reset the filter indicator after the water filter has been replaced.

NOTE: It is recommended that the filter be replaced when the indicator light on the front dispenser reaches 0. If the water or ice cube taste starts to deteriorates.

ACTIVATING ICE PLUS





Press by 3 seconds the **ICE TYPE / ICE PLUS** button once to activate the ICE PLUS function. The ICE PLUS icon on the display panel will illuminate when activated.

The ICE PLUS function runs the freezer compartment at the coldest setting for a 24-hour period to increase icemaking by up to about 20%, and then turns off automatically.

NOTE: Press the button again to deactivate the ICE PLUS function.

ACTIVATING FRESH AIR FILTER

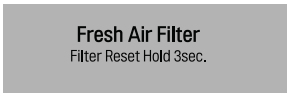

The **FRESH AIR FILTER** has two settings, Auto ad MAX. In Auto mode, the Air Filter will cycle on and off in increments of ten minutes on and 110 minutes off .

If set to the MAX mode, the Air Filter will stay on continuously for four hours, cycling on and off in increments of ten minutes on and five minutes off .

After four hours, the Air Filter will switch to Auto mode.

- Auto mode is the default mode.
- Press the Air Filter button once for MAX mode.

When the REPLACE icon turns on, the air filter needs to be replaced. After replacing the air filter, press and hold the Air Filter button for 3 seconds to turn the icon light off . It is recommended to change the air filter approximately every six months.

DIAGNOSTIC FAILURE DETECTION

The diagnostic function automatically detects problems with your refrigerator, and a diagnostic code will appear in the display. NOTE: If a diagnostic code appears in the display during use, note the code and call your Service Center. Refer to the Warranty Card to obtain the telephone number of the Service Center near you.

SPACEPLUS ICE SYSTEM

⚠ CAUTION

- Keep hands and tools out of the ice compartment door and dispenser chute. You could break something or injure yourself.

The icemaker will stop producing ice when the ice bin is full. If you need more ice, empty the ice bin into the extra ice bin in the freezer compartment so the icemaker can keep producing ice.

Shake the ice bin occasionally to level the ice in it. Sometimes the ice piles up near the icemaker, causing the icemaker to misread the amount of ice cubes and stop producing ice.

NOTE: Storing cans or other items in the ice bin may damage the icemaker.

Keep the ice compartment door closed tightly. If the ice compartment door is not closed tightly, the cold air in the ice bin will freeze food in the refrigerator compartment. This could also cause the icemaker to not produce ice.

NOTE: If the On/Off switch on the icemaker is set to Off for an extended time, the ice compartment will gradually warm up to the temperature of the refrigerator compartment. To prevent ice cubes from melting and leaking from the dispenser, ALWAYS empty the ice bin when the icemaker is set to Off for more than a few hours.

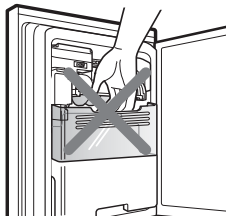

⚠ CAUTION

While you handle the ice bin, keep your hands out of blade. The blade has sharp edges could cause injury.



NOTE: To open or close the ice room compartment, push or pull on the handle.

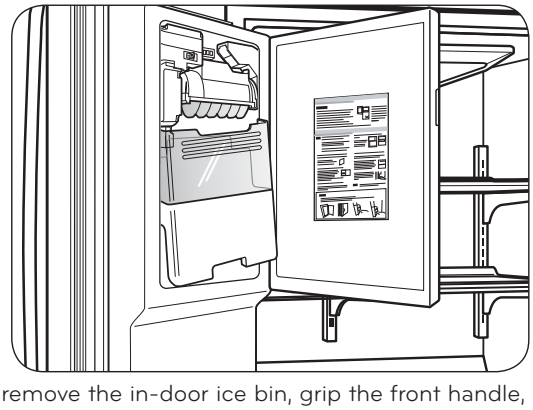

To remove the in-door ice bin, grip the front handle, slightly lift the lower part, and slowly pull out the bin as shown.

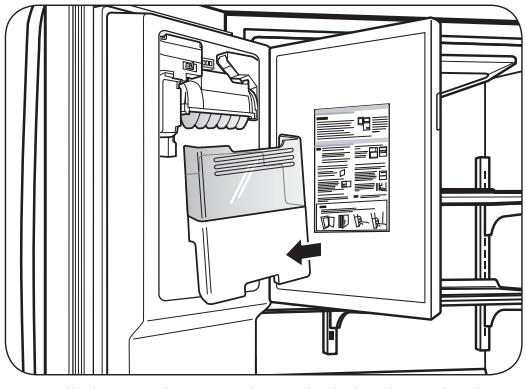

To reinstall the in-door ice bin, slightly slant the bin during replacement to avoid contact with the icemaker.

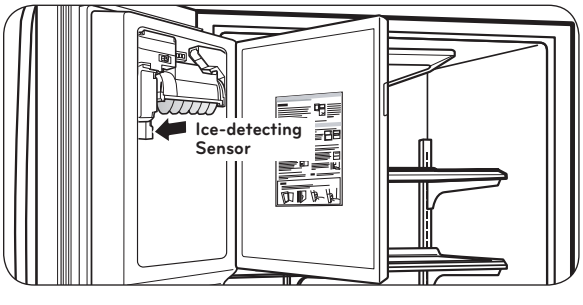

NOTE: Avoid touching the Ice-detecting sensor when replacing the ice bin. See the label on the ice compartment door for details.

AUTOMATIC ICEMAKER

Ice is made in the automatic icemaker and sent to the dispenser. The automatic icemaker can make 10 or 12 ice cubes (depending on your device) at a time, above 100 cubes per 24-hour period. This quantity may vary by circumstance, including freezer compartment temperature, room temperature, number of door openings, freezer load, and other operating conditions.

- It takes about 12 to 24 hours for a newly installed refrigerator to make ice.
- Icemaking stops when the ice storage bin is full.
- To turn off the automatic icemaker, set the icemaker switch to OFF (O). To turn on the automatic icemaker, set the switch to ON (I).
- The water pressure must be 20 and 120 psi on models without a water filter and between 40 and 120 psi on models with a water filter to make normal amount and size of ices.

NOTE: It is normal that a noise is produced when ice drops into the ice storage bin.

- Even when the water pipe is not connected and the Ice Maker is turned on, the water valve operates. The noise is generated because the water pipe is not connected, which does not mean the icemaker is defective.

⚠ WARNING

Personal Injury Hazard

- DO NOT place fingers or hands on the automatic icemaking mechanism while the refrigerator is plugged in.

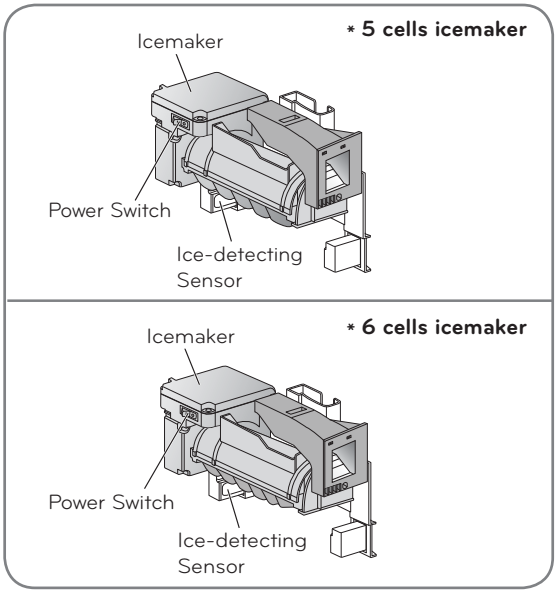

⚠ CAUTION

- The first ice and water may include particles or odor from the water supply line or the water tank.
- Throw away the first few batches of ice (about 20 pieces) and purge the water line for 2 minutes after installation to eliminate air and odd tastes.
- This is also necessary if the refrigerator has not been used for a long time.
- Never store beverage cans or other foods in the ice bin for the purpose of rapid cooling. Doing so may damage the icemaker or the containers may burst.
- If discolored ice is dispensed, check the water filter and water supply. If the problem continues, contact an Authorized Service Center. Do not use the ice or water until the problem is corrected.
- Keep children away from the dispenser. Do not allow children to play in or around dispenser.
- The ice passage may also become blocked with frost if only crushed ice is used. Remove the frost that accumulates.
- Never use thin crystal glass or crockery to collect ice.
- Such glasses or containers may break, and glass fragments could be in the ice.
- Dispense ice into a glass before filling it with water or other beverages. Splashing may occur if ice is dispensed into a glass that already contains liquid.
- Never use a glass that is exceptionally narrow or deep. Ice may jam in the ice passage and refrigerator performance may be affected.
- Keep the glass at a proper distance from the ice outlet. A glass held too close to the outlet may prevent ice from dispensing.
- To avoid personal injury, keep hands out of the ice door and passage.
- Never remove the dispenser cover.
- If you find ice or water dispensed unexpectedly, turn off the water supply and call your Service Center. Refer to the Warranty Card to obtain the telephone number of the Service Center near you (24 hours a day, 365 days a year).

ADJUSTING CONTROL SETTINGS

Give the refrigerator time to cool down completely before adding food. It is best to wait 24 hours before adding food to the refrigerator.

The mid-settings indicated in the previous section should be correct for normal household refrigerator usage. The controls are set correctly when milk or juice is cold to your liking and ice cream is firm.
The refrigerator control functions as the thermostat for the entire appliance. The higher the number setting, the longer the compressor will run to keep the temperature colder. The freezer control adjusts the cold air flow from the freezer to the refrigerator. Setting the freezer control to a lower temperature keeps more cold air in the freezer compartment to make it colder.

If you need to adjust the temperature in the refrigerator or freezer, begin by adjusting the refrigerator first. Wait 24 hours after the refrigerator adjustment to check the freezer temperature. If it is too warm or too cold, then adjust the freezer control as well.
Use the settings listed in the table below as a guide.

CONDITION/REASON:	RECOMMENDED ADJUSTMENT:
REFRIGERATOR section is too warm • Opening the door often • Adding a large amount of food • Room temperature is very warm	**Adjust the REFRIGERATOR setting to the next highest number and wait 24 hours, then check.**
FREEZER section is too warm/ ice is made too slowly • Opening the door often • Adding a large amount of food • Room temperature is very low (not cycling often enough) • Using ice frequently • Air vents blocked by objects	**Adjust the FREEZER setting to the next highest number and wait 24 hours, then check.** **Remove any objects blocking air flow.**
REFRIGERATOR section is too cold • Controls not set correctly for your conditions	**Adjust the REFRIGERATOR setting to the next lowest number and wait 24 hours, then check.**
FREEZER section is too cold • Controls not set correctly for your conditions	**Adjust the FREEZER setting to the next lowest number and wait 24 hours, then check.**

FOOD STORAGE GUIDE

ITEMS	HOW TO STORE
Storing Fresh Food	Wrap or store food in the refrigerator in airtight and moisture-proof material unless otherwise noted. This prevents food odor and taste transfer throughout the refrigerator. For dated products, check date code to ensure freshness.
Butter or margarine	Store opened butter in a covered dish or in a closed compartment. When storing a larger quantity, wrap in freezer packing and freeze.
Cheese	Store in original packaging until you are ready to use it. Once opened, tightly rewrap with plastic wrap or aluminum foil.
Vegetables with skins (carrots, peppers)	Place in bags or plastic containers inside the crisper.
Fruit	Wash and let dry; store in plastic bags in the refrigerator. Do not wash or pit berries until you are ready to eat them. Berries should be selected and kept in their original packaging (if there is any) or in a paper bag closed halfway and set on a shelf.
Leafy Vegetables	Remove original packaging and trim any dirty or discolored parts. Wash in cold water and drain. Place in a plastic bag or plastic container and store in the crisper.
Fish	Consume fish or seafood the same day purchased.
Chef Fresh	Store any meat in original airtight, moisture-proof packaging Rewrap if necessary.
Leftovers	Cover leftovers with plastic wrap or aluminum foil. Plastic containers with airtight lids can also be used.

STORING FROZEN FOOD

NOTE: For more information on how to prepare food to be frozen such in a way to see the period they can be stored consult a frozen food guide or cook book.

Packaging

A great freezing depends on how great you package the food. When you seal the package make sure you remove all excess air and do not allow humidity. A package that is incorrectly sealed will result in the transmission of bad odors, contaminants inside your refrigerator and will

Packaging Recommendations:
- Use sealed plastic containers.
- Use plastic containers with a smooth surface.
- Package with aluminum foil of high resistance.
- Wrap with paper layered with plastic.
- Use water proof plastic.
- Use recommended plastic bags to store frozen foods.

Follow these packaging or container instructions in order to reach the best freezing

Do not use:
- Bread Wrapping.
- Plastic container not safe for storing.
- Containers without lids or seals.
- Waxed paper or waxed plastic.
- Thin wrapping paper or not water proof.

Freezing

IMPORTANT: Do not keep bottles in the freezer compartment, they may explode after freezing and cause damage.

For the maximum use of your freezer do not store excess food. Do not introduce a large amount of unfrozen foods that cannot be frozen within 24 hours (no more than 2 – 3 pounds or ,91 kg - 1,36 kg of food per square inch of space in the freezer). Sufficient space must be left in order for the air to circulate properly around the packages. Leave enough space in order to close your refrigerator with out difficulty.

Storage times can vary depending on the type and quality of the food, the way its package, or packaging container used, (in comparison to air and humidity), and the temperature it being stored in. Ice crystals formed inside your package are normal it indicates the air and humidity inside your package have condensed.

NOTE: Let warm foods cool off at room temperature for approximately 30 min, then wrap accordingly with the methods mention above and freeze. By letting your warm foods cool off before you introduce them to your freezer it will save you energy.

⚠ WARNING

SUFFOCATING DANGER

Adequate ventilation is required when using dry ice. Dry ice is Carbon Dioxide (CO_2). When it evaporates it produces oxygen, causing dizziness, slight headaches, unconsciousness or death. Do not inhale these vapors and properly ventilate the room while you use dry ice.

REFRIGERATOR SECTION

REFRIGERATOR SHELVES

The shelving of your refrigerator can be adjusted to comply with your storage necessities; Depending on the model you have in can include glass shelving or wired shelving. The storing of your foods together and adjusting the shelving to different heights will ease to help you locate what you need. This also helps your refrigerator to stay shut longer which will save you energy.

IMPORTANT: While your refrigerator glass shelving are cold do not clean with hot or warm water. The glass shelving may break if exposed to rapid temperature changes or hard impacts. For your safety the glass shelving are made out of tempered glass so when at breaking they will fracture into tiny fragments.

NOTE: Be careful while moving or relocating the shelves they are heavy. If moving the shelves is required keep in mind to locate them in a safe environment to prevent them from breaking.

Adjusting Shelves

Remove the shelves and adjust them to your convenience.

- **Removing Shelves**

Incline the front of the shelf in the direction indicated by figure 1 and lift in the direction indicated by figure 2. Pull the shelf towards you.

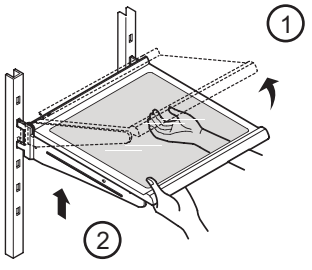

- **Replacing Shelves**

Incline the frontal part of the shelf (1) and guide the shelf hooks towards the openings at the height desired. Then lower the front of the shelf (2) so the hooks can be inserted (3) in the shelf supports.

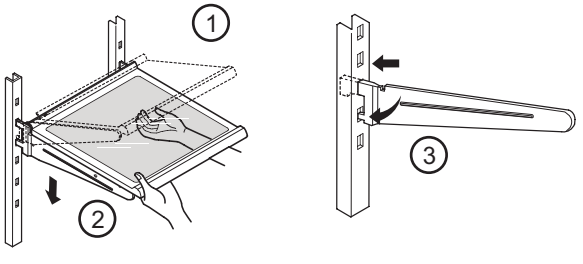

NOTE: Make sure that the shelf is installed in the horizontal manner. If not secured it can cause the shelves to fall, which will cause your stored food to spill.

Sliding Shelves (in some models)
You can slide some of the shelves in your refrigerator towards inside or outside like explained below.

- To slide the shelf towards the outside: Pull towards you, figure A.
- To slide the shelf towards the inside: Push until it stops, figure B.

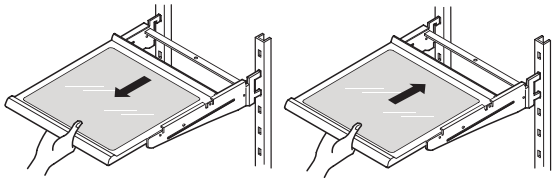

Figure A Figure B

In order to remove a shelf from a metal frame
- Pull the shelf until it stops.
- Incline the front of the shelf towards the top and pull forward.
- Lift the shelf in the manner it moves across the support openings.

To put back into place just reverse these steps.

Functional Shelves (Folding Shelves, in some models)
You can store tall articles like gallons or bottles just by simply folding the shelf in half.

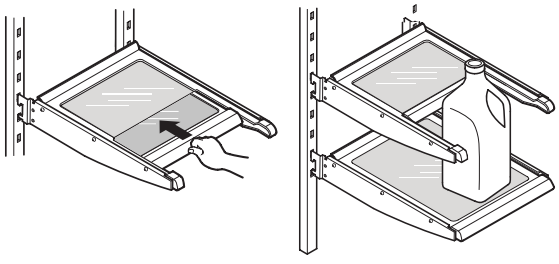

CRISPER HUMIDITY CONTROL (in some models)
You can control the amount of humidity in the moisture-sealed crispers. Adjust the control to any setting between HIGH and LOW.
- **"High"**: keeps moist air in the crisper for best storage of vegetables.
- **"Low":** lets moist air out of the crisper for best storage of fruits.

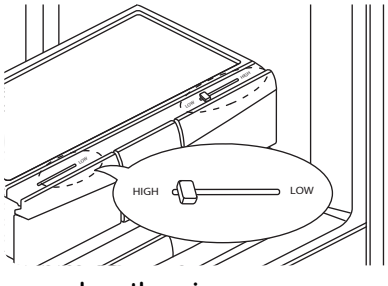

To remove or replace the crisper:
- To remove, slide the crispers out to full extension.
- Lift the front of the crisper up, then pull it straight out.
- To install, slightly tilt up the front and insert thedrawer into the frame and push it back intoplace.

⚠ **CAUTION:** Be careful when you handle the glass cover because it could loose.

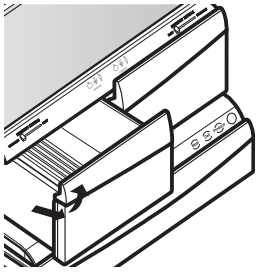

To remove or replace Glide'N'Serve drawer
1. To remove, pull the drawer out to full extension.
2. Lift the front of the drawer up, then pull it straight out

To install, slightly tilt up the front and insert the drawer into the frame and push it back into place.

NOTE: Removing the fixed door bin is recommended to reduce the risk of door bin scratches.

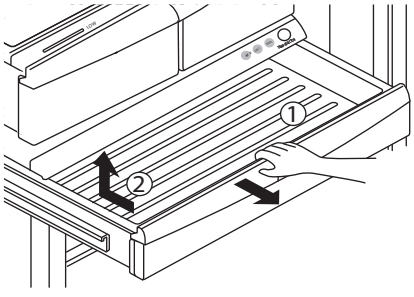

To remove the glass:

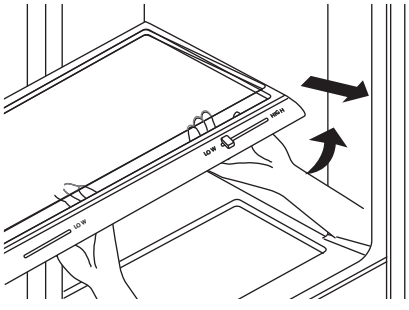

- Lift up the glass under the crisper cover.
- Pull the glass up and out.

To remove or replace the crisper cover support:
NOTE: Remove glass before removing the crisper cover support.
- While holding the crisper cover support with both hands (as shown in the image below). Pull forward and slightly lift the front part.

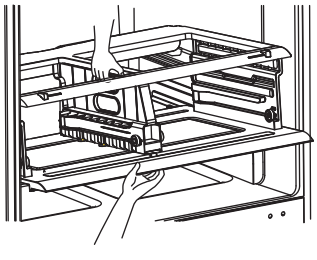

Glide'N'Serve (In some models).

The Glide'N'Serve provides storage space with a variable temperature control that keeps the compartment colder than refrigerator. This drawer can be used for large party trays, deliitems, or beverages.

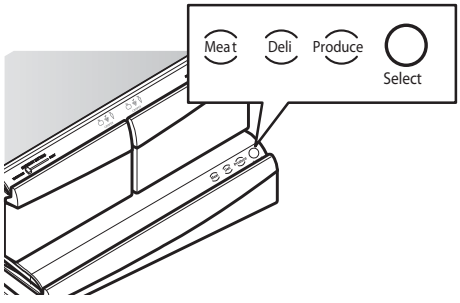

Selection Button

- When "MEAT" is selected, the temperature of the Glide'N'Serve can be kept around 34°F(1°C). This feature helps keep meat or fish fresh for a longer time. The Glide'N'Serve temperature can be maintained under recommended temperature setting Freezer : 0°F (-18°C), Refrigerator: 37°F (3°C).
- When "DELI" is selected, the temperature of the Glide'N'Serve can be kept around 38°F (3°C).This feature helps keep food fresh for a longer time. The Glide'N'Serve temperature can be maintained under recommended temperature setting Freezer: 0°F (-18°C), Refrigerator : 37°F (3°C).
- When "PRODUCE" is selected, the temperature of the Glide'N'Serve can be kept around 41°F(5°C). This feature helps keep food fresh for along time. The Glide'N'Serve temperature canbe maintained under recommended temperature setting Freezer : 0°F (-18°C), Refrigerator : 37°F (3°C).

DOOR RACKS

The door racks are removable for easy cleaning and adjusting.

- To remove the rack, simply lift the rack up and pull straight out (1).
- To replace the rack, slide it in above the desired support button and push down until it stops (2).

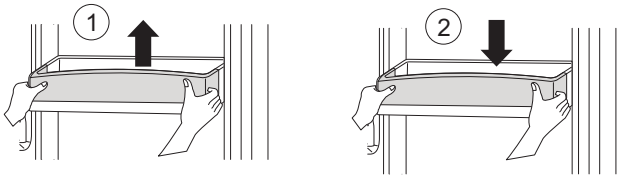

WARNING: Somebody can be hurt if door racks are not firmly assembled.

CAUTION: DO NOT allow children to play with baskets. Sharp corners on baskets could cause injury.

NOTE: DO NOT adjust a rack that is loaded with food.

DAIRY COMPARTMENT (in some models)

- To remove the dairy compartment, simply lift it and pull straight out (1).
- To replace the dairy compartment, slide it in above the desired location and push down until it stops (2).

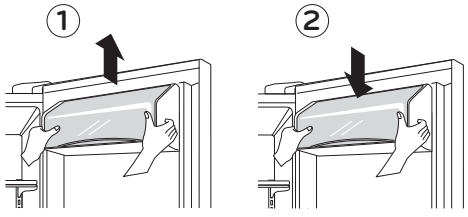

DISPENSER DRIP TRAY (in some models)

The dispenser drip tray has no self-draining function. It should be cleaned regularly. Remove the cover by pressing and pulling the tray. Dry it with a cloth. To reinstall the tray, slightly tilt the front of the tray and snap the ribs into the holes.

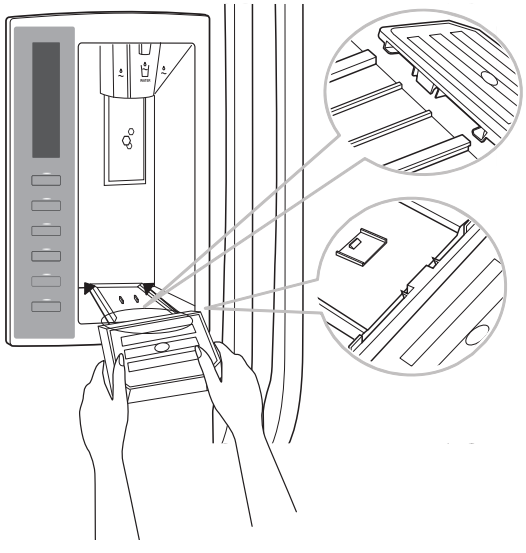

FREEZER SECTION

ICE BIN (In some models)

To remove Ice Bin:
- Pull the drawer as much as possible (1).
- Raise the ice box and take it out carefully (2).

To reinstall Ice Bin:
- Take the drawer off as much as possible and put the ice bin in the right position.

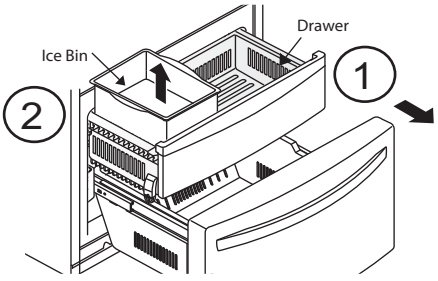

DURABASE (in some models).

- Fully extend the freezer drawer. Lifting part and pull it up (1).
- To put it back , insert the Durabase in the rail assembly (2).

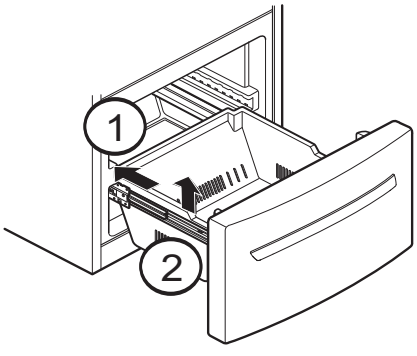

DURABASE DIVIDER (in some models)

Allows organizing the Durabase area in 2 sections.
For moving the divider, just move it in the direction that you want.

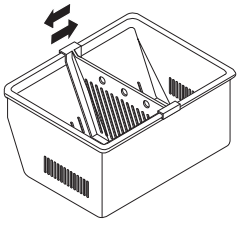

⚠ **WARNING**: In order to prevent accidents, such as suffocation, DO NOT let children and pets play inside the durabase.

⚠ **WARNING**: There is enough space for the children to play.

Pull-Out Drawer

To remove the drawer, push drawer to the back over the stoppers until it stops, gently lift the rear left and right sides of the drawer and pull it out.

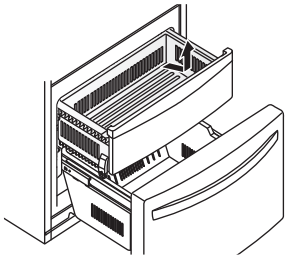

To reinstall, pull out and fully extend both rails. Insert the end of rib in the bracket at left and right. Making sure that the guides at the front are lined up properly, gently push down on both sides.

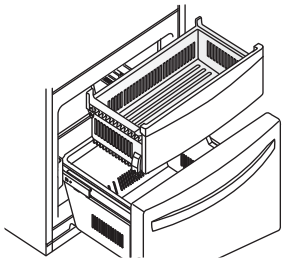

⚠ WARNING

EXPLOSION HAZARD



Do not use flammable cleaners. Not following these instructions can cause death, explosion or fire.

The refrigerator, as well as the freezer, do their own de-freezing. This process does not prevent the build up of contaminants, therefore it is suggested that you clean both parts once a month; clean spilled liquids immediately.

REFRIGERATOR CLEANING

- Unplug your refrigerator.
- Pull out all of the removable parts (such as the vegetable and dairy doors).
- Use a clean sponge (or a soft rag) and use it with lukewarm water mixed with detergent. Do not use abrasive or concentrated cleaners.
- Hand wash it, and dry it thoroughly.
- Plug the refrigerator back in.

OUTSIDE

Wax the outside in order to create better protection. Make sure you use a product specifically design to be used for electro-domestic products (car wax is acceptable). Use a clean, soft rag, and perform this task twice a year. For metal-made refrigerators, do not wax, simply clean it with water and detergent. Do not use concentrated or abrasive products.

NOTE: Avoid the usage of chemical products that contain phosphates or bleach.

INSIDE (Allow freezer to slightly warm up a small degree to prevent cloth from sticking)

In order to eliminate bad odors, clean the inside of the refrigerator with a mixture of baking powder and lukewarm water (one teaspoon of baking powder per cup of water). Ensure that the powder dissolves thoroughly, in order to prevent any sort of damage.

DOOR LINING AND GASKETS

Use only a mild detergent (such as dish soap).

PLASTIC PARTS (Covers and Panels)

Do not use abrasive, paper or rough products. These could damage the product.

BACK COVER

⚠ WARNING

ELECTRICAL SHOCK HAZARD

Before you begin, either unplug the refrigerator or turn off power at the circuit breaker or fuse box.

NOTE: Back Cover should only be removed by a qualified technician.

In order to get an efficient performance of your refrigerator, clean the back cover of it at least twice a year.

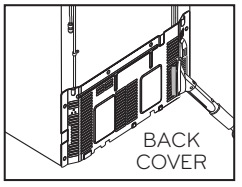

REPLACING REFRIGERATOR LIGHTS

NOTE: The interior lighting for refrigerator uses LED lighting.

DO NOT try to change any LED module. LED lighting should only be replaced by qualified technician.

POWER INTERRUPTIONS

1. In case of a black out, call your electric company and ask how long it will last.
2. In case of a 24 hour or less black out, do not open the refrigerator; this will keep the food fresh.
3. In case of a longer black out, do one of the following options:

- Pull out all of the frozen food and keep them in an ice chest.
- Put 2 lbs (907 g) of frozen ice (make sure you use gloves) for each square foot (28 L) inside the freezer. This task will preserve the food from 2 to 4 days.
- In case you do not possess neither ice chest or dry ice, consume your food as soon as possible.

REMEMBER: In a power failure, a full freezer stays cold longer than a partially filled one. A freezer full of meat stays cold longer than a freezer full of baked goods. If you see that food contains ice crystals, it may be safely refrozen, although the quality and flavor may be affected. If the condition of the food is poor or if you feel it unsafe, dispose of it.

WHEN GOING ON VACATION

If you decide to leave your refrigerator on when going away, consider these steps:

1. Consume all of the perishable items and freeze the rest.
2. Empty the ice bin.

If you decide to leave your refrigerator off:

1. Remove all of the food.
2. Unplug your refrigerator.
3. Clean and dry it well.
4. Make sure the doors stay open (use blocks or tape) in order to prevent bad odors and fungi from happening.

WHEN MOVING

If you decide to take your refrigerator with you when moving, consider the following:

1. Remove all of the food from it, and place the frozen food in an ice chest with dry ice.
2. Unplug your refrigerator.
3. Empty the water from its tray.
4. Clean and dry it with a rag.
5. Pull out all of the removable parts, and wrap them with adhesive tape.
6. Depending on the model of the refrigerator, lift the top part of the refrigerator so it can roll with ease, or screw the levelers so it won´t scratch the floor. Consult to the section **"Closing and Aligning Doors".**
7. Keep the doors closed with the cable glued to the refrigerator cabinet with an adhesive tape.

When your refrigerator arrives to your home, put everything back into place and read the section **"Refrigerator Installation"** in order to obtain installation preparation. In case your refrigerator has a factory ice maker, remember you have to reconnect the water supply.

REPLACING THE WATER FILTER

It is recommended that you replace the filter approximately every 6 months, when the water filter indicator reaches 0 months, or when the ice and water dispenser noticeably decreases out-put.

Remove the old cartridge.

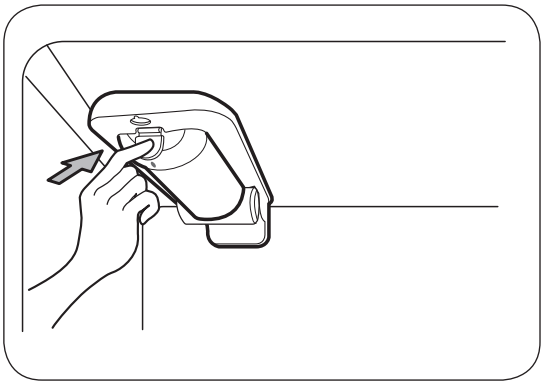

1. Press the push button to open the filter cover.
   NOTE: Replacing the filter causes a small amount of water (around 1 oz. or 25 cc) to drain. Place a cup under the filter hole to catch any waste.

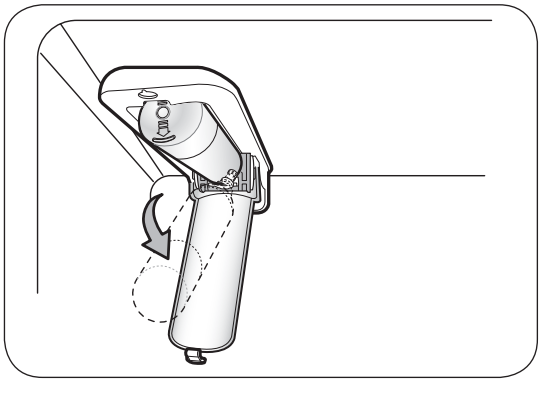

2. Pull the cartridge downward.

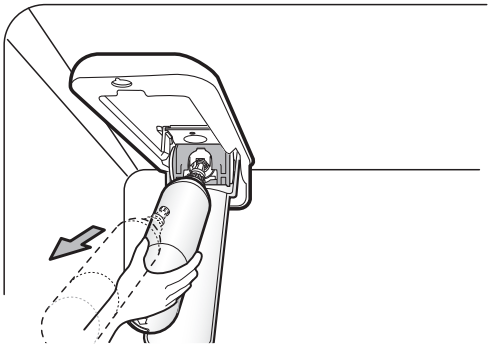

3. Pull out the filter cartridge.
   NOTE: When opened at a full angle the cartridge should easily come out.

REPLACING THE WATER FILTER

Replace with a new cartridge.

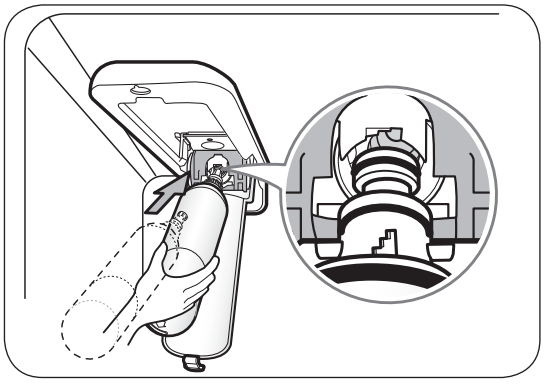

1. Take the new cartridge out of its packing and remove the protective cover from the o-rings. With cartridge ears in the horizontal position, push the new filter cartridge into the manifold hole until it stops.

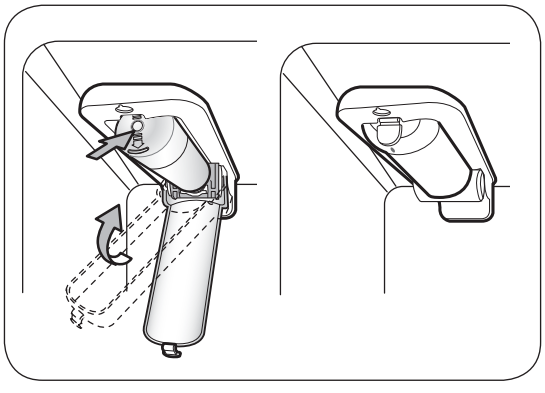

2. Firmly lock in the cartridge.
   The cover will click back into place.

NOTE: After replacing the filter, flush 2.5 gallons through filter before use (flush for approximately 5 minutes).
Check the filter for leaks.

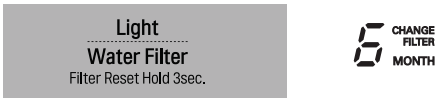

When the water filter indicator displays the message 0 Filter Month, hold 3 seconds. Reset the water filter status display and indicator light by pressing and holding the **LIGHT / WATER FILTER** button for at least 3 seconds.

NOTE: Filter Bypass Plug
Keep the filter bypass plug.
You must use the filter bypass plug when a replacement filter cartridge is not available.
The icemaker will not operate without the filter or filter bypass plug inserted in the proper compartment.

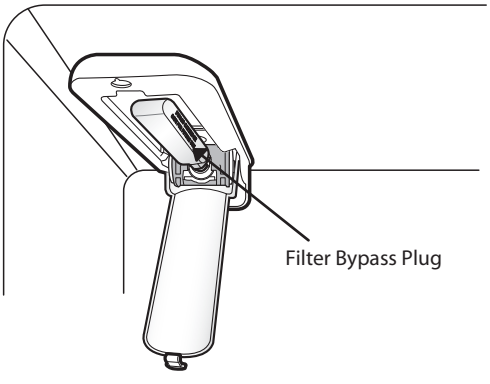

To purchase replacement water filter cartridges, visit your local appliance dealer or parts distributor, or refer to the warranty card to obtain the telephone number of the service center near to you.

You can also call:
USA **1-800-243-0000**
CANADA **1-888-LGCANADA**
(24 hours per day/7 days per week).

The replacement water filter cartridge's part number is **ADQ36006101.**

Performance Data Sheet

Model: LG ADQ36006101-S Use Replacement Cartridge: ADQ36006101

The concentration of the indicated substances in water entering the system was reduced to a concentration less than or equal to the permissible limit for water leaving the system as specified in NSF/ANSI Standard 42 and Standard 53.

System tested and certified by NSF International against NSF/ANSI Standard 42 and Standard 53 for the reduction of substances listed below.

Contaminant Reduction	Average Influent	NSF specified Challenge Concentration	Avg % Reduction	Average Product Water Concentration	Max Permissible Product Water Concentration	NSF Reduction Requirements	NSF Test Report
Chlorine Taste and Odor	2.1 mg/L	2.0 mg/L ± 10%	97.2%	0.06 mg/L	N/A	≥ 50%	J-00049247
Nominal Particulate Class I, , ≥0.5 to < 1.0 µm	5,600,000 pts/mL	At least 10,000 particles/mL	98.7%	73,000 pts/ml	N/A	≥85%	J-00049282
Asbestos	190 MFL	107 to 108 MFL; fibers greater than 10 µm in length	>99%	< 1MLF	N/A	≥99%	J-0004928
Atrazine	0.0094 mg/L	0.009 mg/L ± 10%	94.7%	0.00005 mg/L	0.003 mg/L	N/A	J-00049293
Benzene	0.016 mg/L	0.015 mg/L ± 10%	96.7%	0.005 mg/L	0.005 mg/L	N/A	J-00049300
Carbofuran	0.08 mg/L	0.08 mg/L ± 10%	98.1%	0.002 mg/L	0.04 mg/L	N/A	J-00049294
Lindane	0.002 mg/L	0.002 mg/L ± 10%	98.2%	0.00004 mg/L	0.0002 mg/L	N/A	J-00051975
P-Dichlorobenzene	0.22 mg/L	0.225 mg/L ± 10%	99.8%	0.0005 mg/L	0.075 mg/L	N/A	J-00049298
Toxaphene	0.014 mg/L	0.015 mg/L ± 10%	93%	0.001 mg/L	0.003 mg/L	N/A	J-00049302
2,4-D	0.213 mg/L	0.210 mg/L ± 10%	95.2%	0.009 mg/L	0.07 mg/L	N/A	J-00049284
Lead pH @6.5	0.150 mg/L	0.15 mg/L ± 10%	>99.3%	0.001 mg/L	0.010 mg/L	N/A	J-00051974
Lead pH @8.5	0.150 mg/L	0.15 mg/L ± 10%	>99.3%	0.001 mg/L	0.010 mg/L	N/A	J-00049277
Mercury @ pH 6.5	0.0059 mg/L	0.006 mg/L ± 10%	96.1	0.0002 mg/L	0.002 mg/L	N/A	J-00053886
Mercury @ pH 8.5	0.0058 mg/L	0.006 mg/L ± 10%	90.1	0.0006 mg/L	0.002 mg/L	N/A	J-00051972
Cyst*	120,000 cysts/L	Minimum 50,000 cysts/L	99.99%	<1 cyst/L	N/A	≥99.95%	J-00049281

* Based on the use of Cryptosporidium parvum oocysts.

Application Guidelines/Water Supply Parameters	
Service Flow	0.5 gpm (1.9 lpm)
Water Supply	Potable Water
Water Pressure	20-120Psi (138~ 827kPa)
Water Temperature	33°F ~ 100°F (0.6°C ~38°C)

It is essential that the manufacturer's recommended installation, maintenance and filter replacement requirements be carried out for the product to perform as advertised.

Note: While the testing was performed under standard laboratory conditions, actual performance may vary.

Replacement Cartridge: ADQ36006101.
For estimated costs of replacement elements please call USA **1-800-243-0000** CANADA **1-888-LGCANADA** (24 hours per day/7 days per week or visit our website at www.lg.com).

3M is a trademark of 3M Company.
NSF is a trademark of NSF International.
© 2009 3M Company. All rights reserved.

⚠WARNING

To reduce the risk associated with ingestion of contaminants: Do not use with water that is microbiologically unsafe or of unknown quality without adequate disinfection before and after the system. Systems certified for cyst reduction may be used on disinfected water that may contain filterable cysts. EPA Establishment Number 10350-MN-005

⚠CAUTION

To reduce the risk associated with property damage due to water leakage:

- **Read and follow.** Use Instructions before installation and use of this system.
- Installation and use MUST comply with all state and local plumbing codes.
- **Do not install** if water pressure exceeds 120 psi (827 kPa). If your water pressure exceeds 80 psi, you **must** install a pressure limiting valve. Contact a plumbing professional if you are uncertain how to check your water pressure.
- **Do not** install where water hammer conditions may occur. If water hammer conditions exist you must install a water hammer arrester. Contact a plumbing professional if you uncertain how to check for this condition.
- **Do not** install on hot water supply lines. The maximum operating water temperature of this filter system is 100°F (38°C).
- **Protect filter from freezing.** Drain filter when temperatures drop below 40°F (4.4°C).
- The disposable filter cartridge must be replaced every 6 months, at the rated capacity or if a noticeable reduction in flow rate occurs.

State of California
Department of Public Health

Water Treatment Device
Certificate Number
09 - 2018

Date Issued: December 15, 2009

Trademark/Model Designation
ADQ36006101-S

Replacement Elements
ADQ36006101

Manufacturer: Cuno Inc.

The water treatment device(s) listed on this certificate have met the testing requirements pursuant to Section 116830 of the Health and Safety Code for the following health related contaminants:

Microbiological Contaminants and Turbidity

s t s y C

Inorganic/Radiological Contaminants

s o t s e b s A

Lead
Mercury

Organic Contaminants

2,4-D Reduction
Atrazine
Benzene
Carbofuran
Lindane
p-Dichlorobenzene
Toxaphene

Rated Service Capacity: 200 gal

Rated Service Flow: 0.5 gpm

Conditions of Certification:

CONNECTING THE WATER LINE

BEFORE START

The water source is not guaranteed by the refrigerator manufacturer. Follow instructions carefully in order to reduce damage.

Air located inside the water pipes can cause hammering or tapping causing damage to the inner pipes or water spillage in the inside of the refrigerator. Call a qualified plumber to fix such hammering on the connections before installing the water pipe.

To avoid burn damage or such, never connect refrigerator to hot water pipes.

If you are to use the refrigerator before connecting it to the water source, make sure the ice maker is the off position.

Never attempt to install the ice maker pipes in areas where room temperature is below freezing point.

When using any electrical device (like a drill) during the installation, make sure device is doubly isolated or making ground to prevent risk of electrical surge or discharge.

All installations should be done considering local water and drainage requirements.

- If an inverted osmosis water filtration system is connected to the cold water source, the water hose installation is not assured or guaranteed by the refrigerator or automated ice maker manufacturer. Follow the next instructions carefully to minimize costly water related damages.
- When having an inverted osmosis water filtration system connected to the cold-water flow, the water pressure for such system must be at least between 40-60 PSI or 0,27 MPa (2,8 kg · f / cm ² ~ 4,2 kg · f / cm ², (2,8 kg · f / cm ² ~ 4,2 kg · f / cm ², less than 2 ~ 3 seconds to fill a 7 oz of capacity cup [0,2 liters]).
- If the inverted osmosis water filtration system pressure is less than 21 PSI or 0,14 MPa (1,5 kg · f / cm ², more than four (4) seconds to fill a 7 oz of capacity cup [0,2 liters]):

a) Identify if the sediments filter in the inverted osmosis system is being blocked. Replace filter if necessary.
b) Allow inverted osmosis system storage tank to refill after extensive usage.
c) Call a qualified plumber if the inverted osmosis water pressure problem continues.

REQUIREMENTS

- **1/4in (6,35 mm) in diameter copper pipe** to connect refrigerator to the water pipe. Make sure both terminals are cut in squared manner.



To determine how much pipe material is needed, measures the distances between the valves located behind the refrigerator and the source of water and add to that 8 feet (2,4 m). Make sure there is sufficient pipe material to allow the free movement of the refrigerator from the wall

- **A cold water source.** Water pressure should be between 0,138 and 0,82 MPa or 20 and 120 PSI for models not containing water filter and between 0,276 and 0,82 MPa or 40 and 120 PSI for models containing water filter.

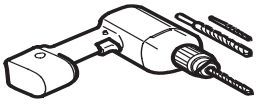

- **A drill.**
- **Adjustable 1/2 in (12,7 mm) key.**
- **Flat and Phillips style (star) screwdriver.**

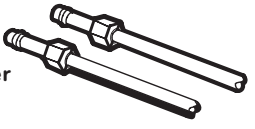

- **Two 1/4 in (6,35 mm) diameter compression nuts** with two sides to connect the copper pipe to the refrigerator valve.

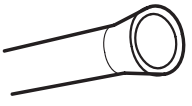

If your current copper pipe has some reduction on the ends, it will be necessary to get and adaptor (found in hardware stores) to connect the water line to the refrigerator. It is also possible to cut such reductions with a pipe cutter and use the compression connections mentioned above.

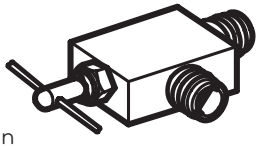

- **Bypass valve** to connect to the cold water line. The valve must have a water opening with an interior 5/32 in (3,46 mm) diameter in the cold-water connection point. These valves can be located in any cold-water connection package. Before buying make sure such valve meets local standards and requirements.

INSTALLATION INSTRUCTIONS

Install the valve to the pipe that you use to drink water. (Connect only to a potable water source).

⚠ **CAUTION:** Connect to potable water supply only.

1. CLOSE THE MAIN WATER SOURCE

Open the nearest water faucet to let water flow and empty pipes.

2. SELECT THE LOCATION OF THE VALVE

Select the location of the valve that will provide a better access. It is best to connect to a vertical pipeline. When connecting to a horizontal pipeline is necessary, make the connection in the lateral or upper area instead of the lower area to prevent accumulation of sediment.

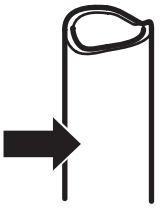

3. DRILL A HOLE FOR THE VALVE

Drill a 1/4" (6,35 mm) diameter hole in the water pipeline. Remove jagged edges produces after perforation. Make sure water does not reach the drill. Not performing the 1/4" (6,35 mm) perforation can lead to a low or smaller ice production.

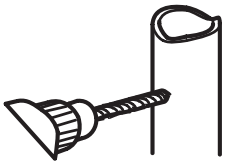

4. TIGHTEN THE VALVE

Tight the valve into the cold water pipeline with a tube trap.

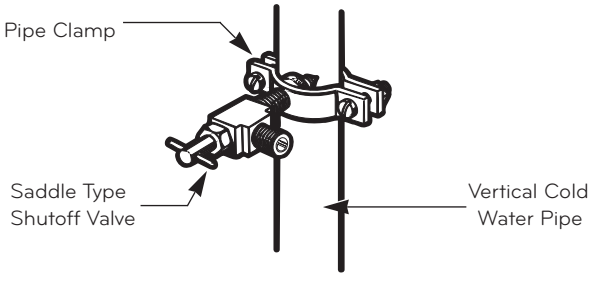

NOTE: Codes for 248 CMR pipelines of the state of Massachusetts must be attached to the connection. Valves of this type are banned in Massachusetts. Call an authorized plumber.

5. TIGHTEN THE TRAP

Tighten the trap until the sealing ring begins to grow.
NOTE: Make sure it is not too tight, this can break the pipe.

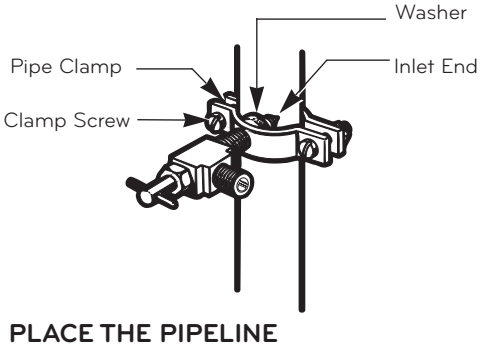

6. PLACE THE PIPELINE

Place the pipeline between the cold water pipe and the refrigerator. Place it through a hole in the wall or floor (behind the refrigerator or next to the cabinet) as clos to the wall as possible.

NOTE: Make sure there is a sufficient amount of extra pipeline (8 feet [244 mm] coiled up three times with a 10" [25 cm] in diameter) to allow free movement of the refrigerator from the wall after installation was made.

7. CONNECT PIPELINE TO VALVE

Place the compression nut and the copper pipe ferule at the end of the pipe and connect to the valve. Make sure the pipe is completely inserted into the valve. Tighten nut carefully.

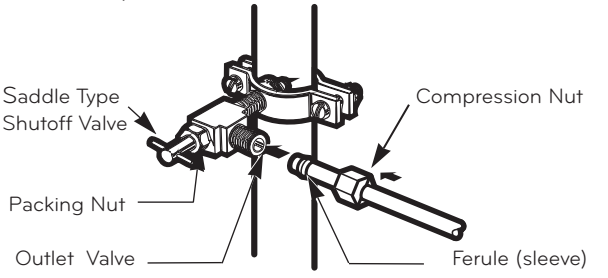

NOTE: Codes for 248 CMR pipelines of the state of Massachusetts must be attached to the connection. Valves of this type are banned in Massachusetts. Call an authorized plumber.

8. DRAIN THE PIPE

Open the main water source (1) and drain the pipe until water comes out clear.

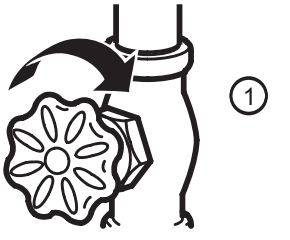

Allow water flow from the bypass valve (2) and close after draining 1/4 of a gallon (1L) of water.

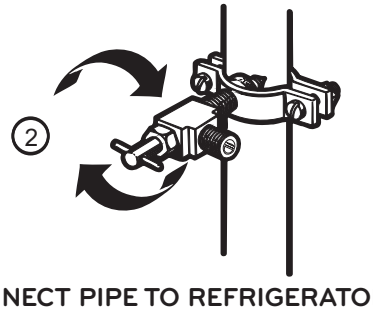

9. CONNECT PIPE TO REFRIGERATOR

NOTES:

- Before making connection to refrigerator, make sure it is not connected to any energy source. If your refrigerator does not have a water filter, it is advised to install one.
- If your water source contains sand or related particles that can travel to the valve, install a water filter near the refrigerator.

IMPORTANT: Never use old or used hoses. Always use new ones to have a better use and experience. Connect always to a potable water source to avoid security and health issues.

- Remove the ring plug (1) from the valve located at the top of such device.

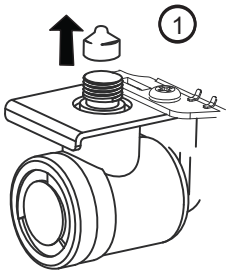

- Place compression nut and the ferule at the end of the pipeline. Insert pipeline into the connection valve as far as possible. Hold tightly while holding pipeline.

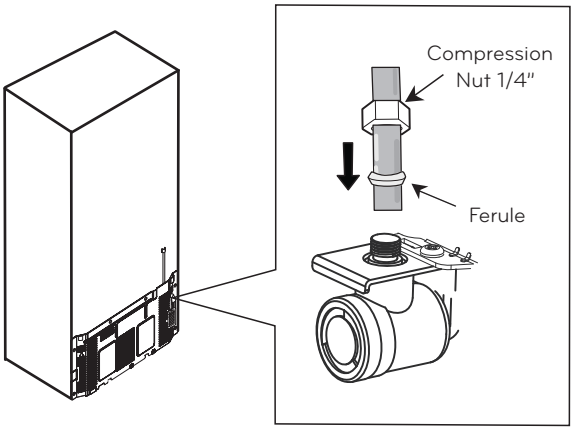

Hold on to the pipe from the handles or grabbers located behind the refrigerator, loosing first the bolt holding the handle. Afterwards, insert pipe into the hole and tighten bolt to finalize.

10. OPEN THE BYPASS VALVE

Tighten all connections containing leaks. Place access cover back on compressor.

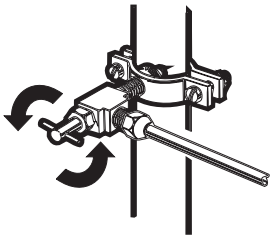

11. CONNECT TO REFRIGERATOR

Fix pipeline in a way that it does not vibrate on the refrigerator or wall. Push refrigerator against wall.

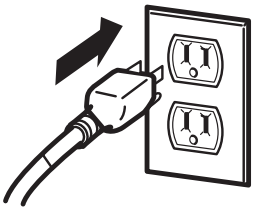

12. TURN ICE MAKER ON

Turn ice maker switch into the **ON** position. Ice maker will start only after reaching its operating temperature of 15 °F (-9 °C) or less. It will automatically begin the ice production if switch is located in the **ON** position.

UNDERSTANDING SOUNDS YOU MAY HEAR

Your new refrigerator might produce certain noises that your previous refrigerator did not. It is normal if you worry. Most of the new sounds you will be hearing are actually normal and expected. Hard surfaces like walls or floor can increase sounds and make them sound louder than they really are. The following list has a description of such sounds along with their causes.

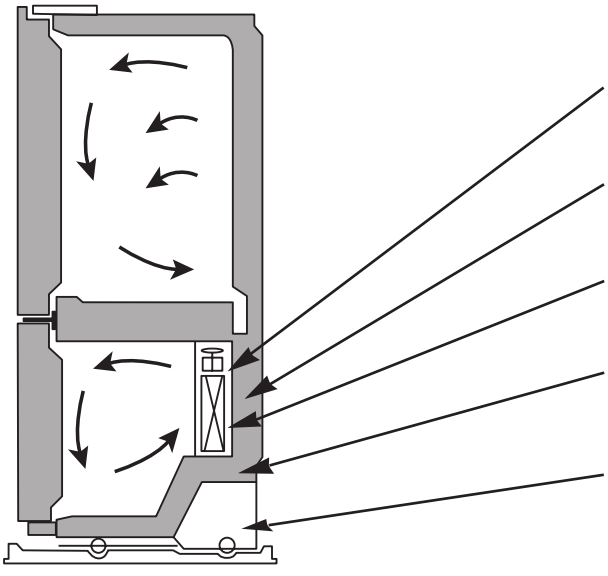

- The thawing timer will make a "click" sound when such timer will start and finish. Temperature controlling device will also make a "click" sound at the beginning and ending of the refrigerator cycle.
- You will hear a bell sound caused by the flow of the refrigerant, water pipe or objects located on the superior part of the refrigerator.
- Your refrigerator is designed to work efficiently to preserve your food at the desired temperature using the least of energy. You will be able to hear a pulsing sound coming from the ventilators and the evaporator. The speed of the ventilator can speed up when you open the refrigerator door.
- After each cycle you will hear a dripping sound due to the refrigerant liquid in your refrigerator.
- Contraction and expansion of the inner walls can cause a slight popping sound.
- You will hear a dripping sound caused during the thawing cycle.
- During the defrosting cycle the water might cause a dripping sound.
- You can hear some tight air sound over the capacitor caused by the fan.
- Running water can be heard during the defrosting cycle.
- Due to its low energy consumption design of the refrigerator; the fans will remain of, while the on-off switch activated the internal light of bin.

Problem	Possible Causes	Solutions
THE REFRIGERATOR WON´T TURN ON	• The plug is correctly positioned. • A fuse has gone bad or the circuit presents failures. • The refrigerator is in the defrosting cycle.	• Firmly plug the cord into a live outlet with proper voltage. • Replace the fuse or reset the circuit breaker. • Wait about 30 minutes for defrost cycle to end.
THE LIGHT WON'T TURN ON	• Interior lights have malfunctioned.	• Interior lights are LED lighting, and repair service must be performed by a qualified technician.

TROUBLESHOOTING GUIDE

Problem	Possible Causes	Solutions
STRANGE SOUNDS OR SNOOZING/ VIBRATIONS	• The refrigerator is not correctly positioned.	• You need to adjust the leveling screws due the floor is unleveled or weak. Read the **Installation** section.
IT LOOKS LIKE THE COMPRESSOR MOTOR STAYS ON TOO LONG	• The replaced refrigerator was an older model. • The room temperature is hotter than usual. • The door is being opened very often or there has been a big amount of food in storage. • The refrigerator is plugged and the control has been adjusted correctly. • Doors won't close correctly. • The condenser pipes are dirty.	• Modern refrigerators with a bigger storage capacity require longer periods of operation. • The motor will continue working when the room temperature is high. The motor might be on between 40% or 80% of the time. In high temperature conditions, the capacitor might run on periods of time. • When adding or opening the door of the refrigerator, it warms it up. It's normal that the refrigerator to run more that usual in order to cool the bins. (Read the section **Food Storage Guide**). To save energy, take what you need at once, order your food in order so it can be easily found and close the door immediately soon after you took out the food. • The refrigerator will take 24 hours to cool down completely. • Push firmly the Doors. If they don't close. Read **Doors will not close completely** below. • This will stop the air transfer and marked the motor to work longer and harder. Clean the pipes of the condenser.
DOORS WILL NOT CLOSE COMPLETELY	• The refrigerator is not leveled. • The food packages are blocking the doors. • The ice bin, the vegetable bin, the panels and the shelves from the door are out of place or position. • The gaskets are sticking. • The refrigerator wobbles or looks instable. • The doors were removed during the installation and they weren't properly setup.	• Read **Refrigerator Installation** section to level refrigerator. • Adjust the food bins in order to free space between the doors and the shelves. • Push the containers and place the vegetable cover lid, the panels, shelves and any other container or bin in their right positions. Read the section **Using your Refrigerator.** • Clean the seal rings and the surface they might be in contact with. Use a piece of cloth with a small amount of paraffin and apply it over the seal rings. • Level the refrigerator. Read the section **Closing and Aligning the Doors.** • Remove and place again the door according to the section **Refrigerator Doors: How to remove and reverse.**
THERE´S ICE ON THE FOOD	• The door hasn't been closed completely. • The door is frequently opened.	• Read **Doors Will not Close Completely** already mentioned. • When the door is opened, warm, humid air is allowed in the freezer resulting in frost.
THERE IS A WEIRD TASTE AND SMELL IN THE ICE	• The ice maker has been installed correctly. • The ice has been on storage too long. • The food hasn't been packed in the correct way. • The water supply contains mineral and sulfur. • The inside of the refrigerator need cleaning. • The ice bin needs cleaning.	• Don't use the first ices made. • Dispose of that old ice and make new. • Pack again the food because it can transfer odors and tastes to the ice. • You might need to install a filter in order to eliminate the odors and taste problems. • Read the section **Refrigerator Care and Cleaning.** • Empty the bin and discard the old ice cubes.

TROUBLESHOOTING GUIDE

Problem	Possible Causes	Solutions
THERE´S WATER IN THE DRAINING BIN	• The refrigerator is in defrosting cycle. • It's more humid than usual.	• The water will evaporate. It is normal that some water falls on the bin. • It might take a while for the water to evaporate. This is normal when the weather is hot and humid.
THE REFRIGERATOR SEEMS TO MAKE TOO MUCH NOISE	• The sounds may be normal for your refrigerator.	• Refer to the **Understanding Sounds You May Hear** section.
THE ICE MAKER IS NOT PRODUCING ICE OR ICE CUBES ARE FREEZING TOO SLOWLY	• Door left open.	• Wait 24 hours after hook-up for ice production. See the **Adjusting the Controls** section. • Check to see if something is holding the door open.
THE DOORS ARE HARD TO OPEN	• The gaskets are dirty or sticky. • The door opens itself as soon as you close it.	• Clean the gaskets and surface that they are in contact with. Use a damp cloth with paraffin also apply over the seal rings. • When you open the door, the warm air enters in the refrigerator. When this air is cooled down it occupies less volume and creates a vacuum effect. If it is difficult to open wait 5 minutes then check.
THE ICE MAKER DOES NOT WORK	• The ice maker is off. • The water supply is down or not plugged. • The freezer temperature is warm. • The ice cubes turn off the ice maker.	• Turn the ice maker to the position on (I). • Read the section **Connecting the Water Line.** • Wait 24 hrs for the freezer to reach its ideal temperature. • Hand level the ice cubes.
THE TEMPERATURE IS TOO HOT OR THERE´S HUMIDITY FORMED INSIDE THE REFRIGERATOR	• The air vents are blocked. The cool air flows from freezer to the refrigerator and returns thru the vents that dive this section. • The doors open very easily. • The refrigerator control has not been adjusted for the room conditions. • A large amount of food is just been placed inside the refrigerator. • The food has not been well packed in each bin. • The doors haven't been closed correctly. • The weather is humid. • The auto-defrosting cycle is over.	• With your hand find the vents and move and package that might be blocking the air flow. See the **Multi Flow** Section. • When the doors are opened the warm and humid air enters. To keep your refrigerator cool, take what you need once and you're your food organized to make it easy to find. Close the door a soon as you can. • Wait 24 hours to stabilize the temperature. If the temperature is cold or hot, move the control until the desire temperature is reached. • After adding food to the refrigerator this will warm up. It might take some hours for the refrigerator to reach its temperature. • Wrap the food evenly and before packing anything dry all the bins to avoid humidity. If it is necessary, pack the food according to the section **Food Storage Guide**. • Read **Doors will not Close Correctly** section. • In humid weathers, the air contains humidity, which introduces it self if the doors are opened. • It's normal that some water props get formed after the defrosting cycle is completed.

SMART DIAGNOSIS™ (In some models).

Should you experience any problems with your refrigerator, it has the capability of transmitting data via your telephone to the LG service center. This gives you the capability of speaking directly to our trained specialists. The specialist records the data transmitted from your machine and uses it to analyze the issue, providing a fast and effective diagnosis.
If you experience problems with your refrigerator, call 1-800-243-0000 (1-888-542-2623 for LG Canada). Only use the Smart Diagnosis™ feature when instructed to do so by the LG call center agent. The transmission sounds that you will hear are normal and sound similar to a fax machine.
Smart Diagnosis™ cannot be activated unless your refrigerator is connected to power. If your refrigerator is unable to turn on, then trouble-shooting must be done without using Smart Diagnosis.™

Using Smart Diagnosis™

First, call 1-800-243-0000 (1-888-542-2623 for LG Canada). Only use the Smart Diagnosis™ feature when instructed to do so by the LG call center agent.

1. Lock the display. To lock the display, press and hold the **Door / Alarm Lock** button for three seconds. (If the display has been locked for over five minutes, you must deactivate the lock and then ractive it).







2. Open the right refrigerator door.
3. Hold the mouthpiece of your phone in front of the speaker that is located on the right hinge of the refrigerator door, when instructed to do so by the call center.

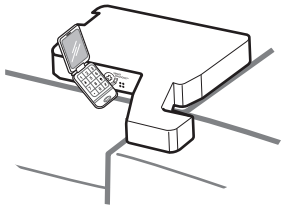

4. Press and hold the Freezer Temperature button for three seconds while continuing to hold your phone to the speaker.





5. After you hear three beeps, release the Freezer Temperature button.
6. Keep the phone in place until the tone transmission has finished. This takes about 15 seconds, and the display will count down the
time. Once the countdown is over and the tones have stopped, resume your conversation with the specialist, who will then be able to assist you in using the information transmitted for analysis.

NOTE

- For best results, do not move the phone while the tones are being transmitted.
- If the call center agent is not able to get an accurate recording of the data, you may be asked to try again.

WARRANTY

LG ELECTRONICS U.S.A., INC.
LG REFRIGERATOR LIMITED WARRANTY - U.S.A.

Should your LG Refrigerator ("Product") fail due to a defect in materials or workmanship under normal home use, during the warranty period set forth below, LG will at its option repair or replace the product. This limited warranty is valid only to the original retail purchaser of the product and applies only when purchased and used within the United States including U.S. Territories. Proof of original retail purchase is required to obtain warranty service under this limited warranty.

WARRANTY PERIOD			
Refrigerator	**Sealed System (Condenser, Dryer, Connecting Tube, Refrigerant and Evaporator)**		**Linear Compressor**
One (1) year from the date of original retail purchase.	One (1) year from the date of original retail purchase.	Seven (7) years from the date of original retail purchase.	Ten (10) years from the date of original retail purchase.
Parts and Labor (internal/functional parts only)	Parts and Labor	Parts only (Consumer will be charged for labor)	Part only (Consumer will be charged for labor)

Noises associated with normal operation and failure to follow instructions found in the use and care and installation guides or operating the unit in an unsuitable environment will not be covered under this warranty.

- **Replacement products and parts are warranted for the remaining portion of the original warranty period or ninety (90) days, whichever is greater.**
- **Replacement products and parts may be new or remanufactured.**

THIS WARRANTY IS IN LIEU OF ANY OTHER WARRANTY, EXPRESS OR IMPLIED, INCLUDING WITHOUT LIMITATION, ANY WARRANTY OF MERCHANTABILITY OR FITNESS FOR A PARTICULAR PURPOSE. TO THE EXTENT ANY IMPLIED WARRANTY IS REQUIRED BY LAW, IT IS LIMITED IN DURATION TO THE EXPRESS WARRANTY PERIOD ABOVE. NEITHER THE MANUFACTURER NOR ITS U.S. DISTRIBUTOR SHALL BE LIABLE FOR ANY INCIDENTAL, CONSEQUENTIAL, INDIRECT, SPECIAL, OR PUNITIVE DAMAGES OF ANY NATURE, INCLUDING WITHOUT LIMITATION, LOST REVENUES OR PROFITS, OR ANY OTHER DAMAGE WHETHER BASED IN CONTRACT, TORT, OR OTHERWISE. Some states do not allow the exclusion or limitation of incidental or consequential damages or limitations on how long an implied warranty lasts, so the above exclusion or limitation may not apply to you. This warranty gives you specific legal rights and you may also have other rights that vary from state to state.

THIS LIMITED WARRANTY DOES NOT COVER:

1. Service trips to deliver, pick up, install, or repair the product; instruct the customer on operation of the product; repair or replace fuses or correct wiring or plumbing, or correction of unauthorized repairs/ installation.
2. Failure of product to perform during power failures and interruptions or inadequate electrical service.
3. Damage caused by leaky or broken water pipes, frozen water pipes, restricted drain lines, inadequate or interrupted water supply or inadequate supply of air.
4. Damage resulting from operating the product in a corrosive atmosphere or contrary to the instructions outlined in the product owner's manual.
5. Damage to the product caused by accidents, pests and vermin, lightning, wind, fire, floods, or acts of God.
6. Damage resulting from misuse, abuse, improper installation, repair, or maintenance. Improper repair includes use of parts not approved or specified by LG.
7. Damage or failure caused by unauthorized modification or alteration, or if it is used for other than the intended purpose, or any water leakage where the unit was not properly installed.
8. Damage or failure caused by incorrect electrical current, voltage, or plumbing codes, commercial or industrial use, or use of accessories, components, or consumable cleaning products that are not approved by LG.
9. Damage caused by transportation and handling, including scratches, dents, chips, and/or other damage to the finish of your product, unless such damage results from defects in materials or workmanship and is reported within one (1) week of delivery (Call: 1-800-243-0000).
10. Damage or missing items to any display, open box, discounted, or refurbished product.
11. Products with original serial numbers that have been removed, altered, or can not be readily determined. Model and Serial numbers, along with original retail sales receipt, are required for warranty validation.
12. Increases in utility costs and additional utility expenses.
13. Replacement of light bulbs, filters, or any consumable parts.
14. Repairs when your product is used in other than normal and usual household use (e.g. commercial use, offices, and recreational facilities) or contrary to the instructions outlined in the product owner's manual.
15. Costs associated with removal of your product from your home for repairs.
16. The removal and reinstallation of the product if it is installed in an inaccessible location or is not installed in accordance with published installation instructions, including LG's owner's and installation manuals.
17. Shelves, door bins, drawers, handles, accessories, and other parts besides those that were originally included with this particular model.

The cost of repair or replacement under these excluded circumstances shall be borne by the consumer.

For complete warranty details and customer assistance,
please call or visit our website:
Call 1-800-243-0000 (24 hours a day, 365 days a year) and select the appropriate option from the menu, or visit our website at www.lg.com
Or by mail: LG Customer Information Center:
P. O. Box 240007, 201 James Record Road Huntsville, Alabama 35813
ATTN: CIC

Write your warranty information below:

Product Registration Information:

Model:
Serial Number:
Date of Purchase:

WARRANTY

LG ELECTRONICS CANADA, INC.
LG REFRIGERATOR LIMITED WARRANTY - Canada

WARRANTY: Should your LG Refrigerator ("Product") fail due to a defect in material or workmanship under normal home use during the warranty period set forth below, LG Canada will at its option repair or replace the Product upon receipt of proof of original retail purchase.
This warranty is valid only to the original retail purchaser of the product and applies only to a Product distributed in Canada by LG Canada or an authorized Canadian distributor thereof. The warranty only applies to Products located and used within Canada.

WARRANTY PERIOD: (Note: If the original date of purchase can not be verified, the warranty will begin sixty (60) days from the date of manufacture)			
Refrigerator/Freezer	**Sealed System (Condenser, Dryer, Connecting Tube, Refrigerant and Evaporator)**		**Linear Compressor**
One (1) year from the date of original retail purchase.	One (1) year from the date of original retail purchase.	Seven (7) years from the date of original retail purchase.	Ten (10) years from the date of original retail purchase.
Parts and Labor (internal/functional parts only)	Parts and Labor	Parts only (Consumer will be charged for labor)	Part only (Consumer will be charged for labor)

Noises associated with normal operation and failure to follow instructions found in the use and care and installation guides or operating the unit in an unsuitable environment will not be covered under this warranty.

- **Replacement products and parts are warranted for the remaining portion of the original warranty period or ninety (90) days, whichever is greater.**
- **Replacement products and parts may be new or remanufactured.**
- **LG Authorized Service Center warranties their repair work for thirty (30) days.**

LG CANADA'S SOLE LIABILITY IS LIMITED TO THE WARRANTY SET OUT ABOVE. EXCEPT AS EXPRESSLY PROVIDED ABOVE, LG CANADA MAKES NO AND HEREBY DISCLAIMS ALL OTHER WARRANTIES AND CONDITIONS RESPECTING THE PRODUCT, WHETHER EXPRESS OR IMPLIED, INCLUDING, BUT NOT LIMITED TO, ANY IMPLIED WARRANTY OR CONDITION OF MERCHANTABILITY OR FITNESS FOR A PARTICULAR PURPOSE, AND NO REPRESENTATIONS SHALL BE BINDING ON LG CANADA. LG CANADA DOES NOT AUTHORIZE ANY PERSON TO CREATE OR ASSUME FOR IT ANY OTHER WARRANTY OBLIGATION OR LIABILITY IN CONNECTION WITH THE PRODUCT. TO THE EXTENT THAT ANY WARRANTY OR CONDITION IS IMPLIED BY LAW, IT IS LIMITED TO THE EXPRESS WARRANTY PERIOD ABOVE. LG CANADA, THE MANUFACTURER OR DISTRIBUTOR SHALL NOT BE LIABLE FOR ANY INCIDENTAL, CONSEQUENTIAL, SPECIAL, DIRECT OR INDIRECT DAMAGES, LOSS OF GOODWILL, LOST PROFITS, PUNITIVE OR EXEMPLARY DAMAGES OR ANY OTHER DAMAGE, WHETHER ARISING DIRECTLY OR INDIRECTLY FROM ANY CONTRACTUAL BREACH, FUNDAMENTAL OR OTHERWISE, OR FROM ANY ACTS OR OMISSIONS, TORT, OR OTHERWISE. This warranty gives you specific legal rights. You may have other rights which may vary from province to province depending on applicable provincial laws. Any term of this warranty that negates or varies any implied condition or warranty under provincial law is severable where it conflicts with provincial law without affecting the remainder of this warranty's terms.

THIS LIMITED WARRANTY DOES NOT COVER:

1. Service trips to deliver, pick up, install, or repair the product; instruct the customer on operation of the product; repair or replace fuses or correct wiring or plumbing, or correction of unauthorized repairs/installation.
2. Failure of product to perform during power failures and interruptions or inadequate electrical service.
3. Damage caused by leaky or broken water pipes, frozen water pipes, restricted drain lines, inadequate or interrupted water supply or inadequate supply of air.
4. Damage resulting from operating the product in a corrosive atmosphere or contrary to the instructions outlined in the product owner's manual.
5. Damage to the product caused by accidents, pests and vermin, lightning, wind, fire, floods, or acts of God.
6. Damage resulting from misuse, abuse, improper installation, repair, or maintenance. Improper repair includes use of parts not approved or specified by LG.
7. Damage or failure caused by unauthorized modification or alteration, or if it is used for other than the intended purpose, or any water leakage where the unit was not properly installed.
8. Damage or failure caused by incorrect electrical current, voltage, or plumbing codes, commercial or industrial use, or use of accessories, components, or consumable cleaning products that are not approved by LG.
9. Damage caused by transportation and handling, including scratches, dents, chips, and/or other damage to the finish of your product, unless such damage results from defects in materials or workmanship and is reported within one (1) week of delivery.
10. Damage or missing items to any display, open box, discounted, or refurbished product.
11. Products with original serial numbers that have been removed, altered, or can not be readily determined. Model and Serial numbers, along with original retail sales receipt, are required for warranty validation.
12. Increases in utility costs and additional utility expenses.
13. Replacement of light bulbs, filters, or any consumable parts.
14. Repairs when your product is used in other than normal and usual household use (e.g. commercial use, offices, and recreational facilities) or contrary to the instructions outlined in the product owner's manual.
15. Costs associated with removal of your product from your home for repairs.
16. The removal and reinstallation of the product if it is installed in an inaccessible location or is not installed in accordance with published installation instructions, including LG's owner's and installation manuals.
17. Shelves, door bins, drawers, handles, accessories, and other parts besides those that were originally included with this particular model.

The cost of repair or replacement under these excluded circumstances shall be borne by the consumer.

For complete warranty details and customer assistance, please call or visit our website: Call 1-888-542-2623 (24 hours a day, 365 days a year) and select the appropriate option from the menu, or visit our website at **www.lg.com**

Write your warranty information below:

Product Registration Information:

Model: _____
Serial Number: _____
Date of Purchase: _____



LG Customer Information Center	
1-800-243-0000	USA, Consumer User
1-888-865-3026	USA, Commercial User
1-888-542-2623	CANADA

Register your Product Online!

www.lg.com