INSTRUCTION MANUAL

BEVERAGE COOLER

SC-1

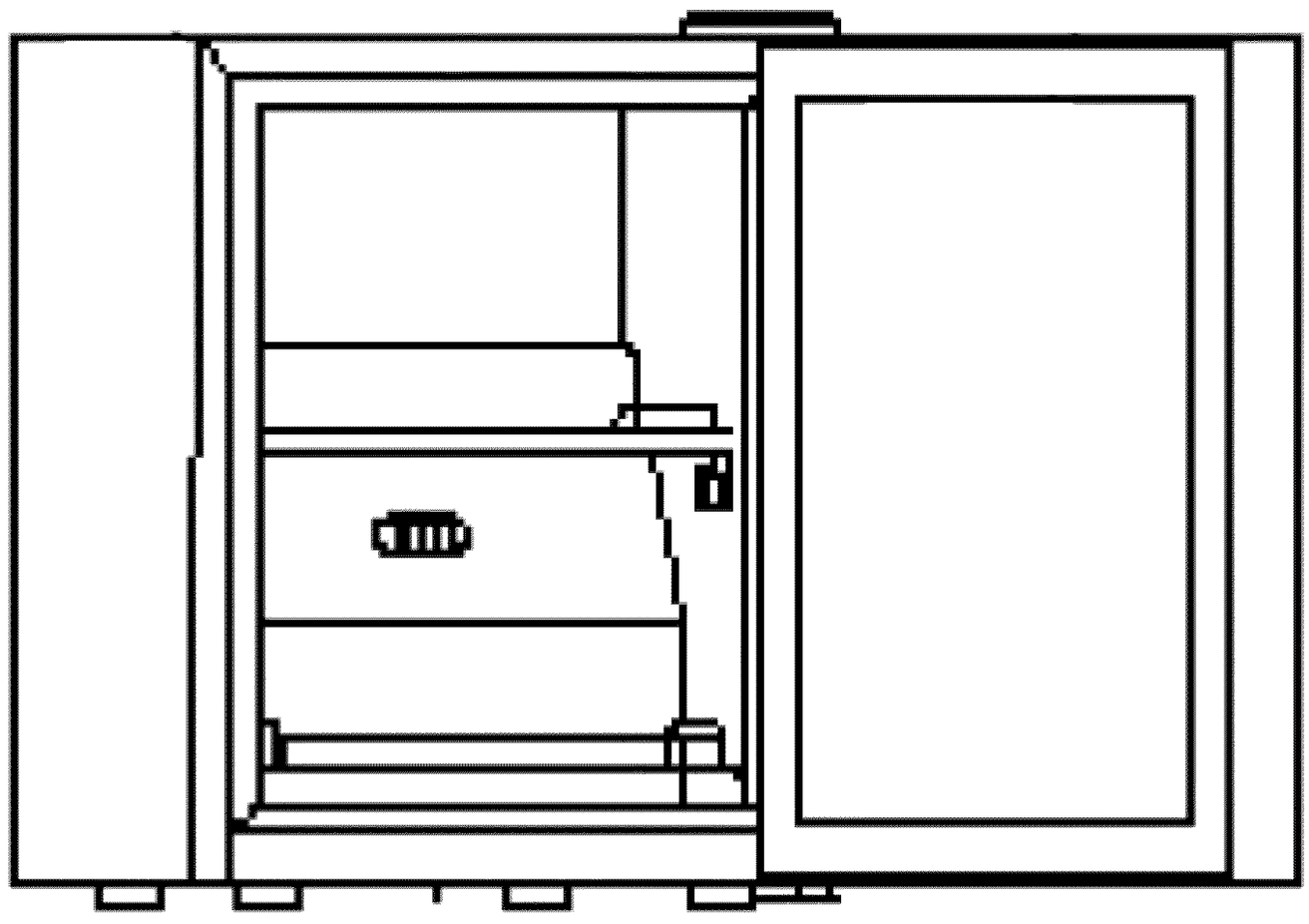

Read and save these instructions.

TABLE OF CONTENT

PARTS AND IDENTIFICATION 1

SAFETY INSTRUCTIONS 1

INSTALLATION 1

ELECTRIC CONNECTION..... 2

START..... 2

LIGHT CONTROL..... 3

MAINTENANCE..... 3

Cleaning..... 3

Power Failure..... 3

Moving the Cooler 4

Drip Pan 4

TROUBLE SHOOTING 4

CIRCUIT DIAGRAM 5

PARTS AND IDENTIFICATION

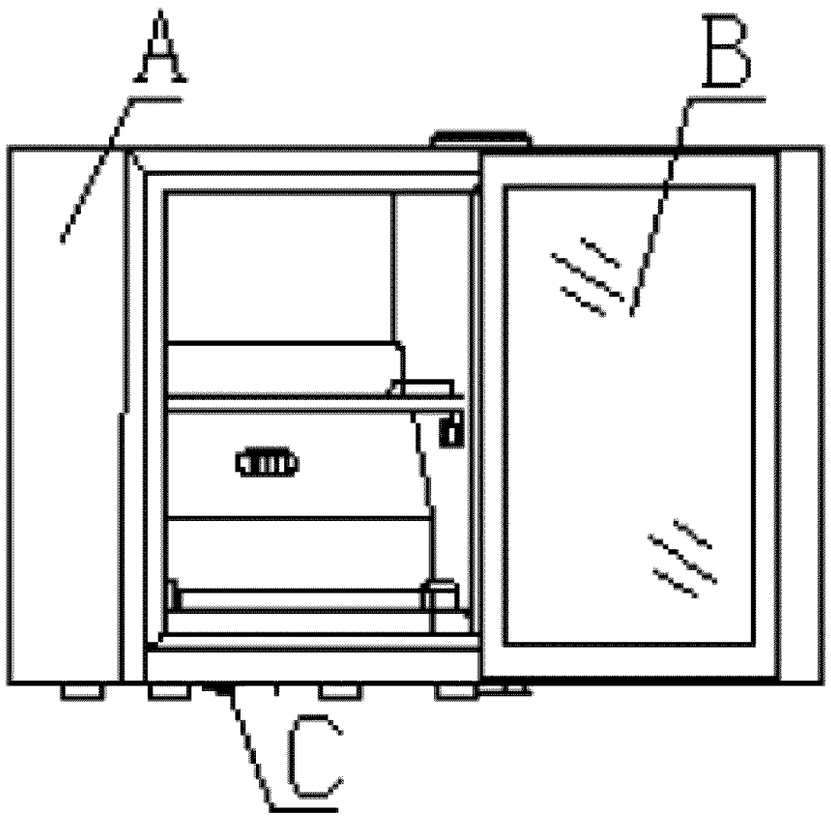

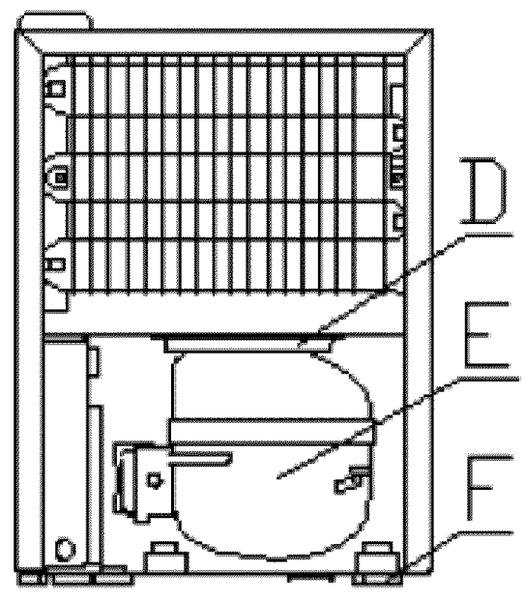

A. Cabinet
B. Glass Door
C. Lock

D. Drip Pan
E. Compressor
F. Adjusting Leg

SAFETY INSTRUCTIONS

To reduce the risk of fire, electric shock, or injury when using your cooler, please note the following basic precautions:

- Before using, read all instructions.
- Never clean appliance parts with flammable fluids. Also do not store or use gasoline or any other flammable vapors and liquids in the vicinity of this or any other appliance. The fumes can create a fire or explosion.

INSTALLATION

- Remove all the packing material before using your cooler.
- Clean the interior surface with a soft cloth and lukewarm water.

SL-1GC19VT-V0

- Locate the cooler in a dry and airy place.
- Coolers transported in the horizontal position, must be returned to the upright position, and not plugged in for 1 hour. **This is essential for proper operation**.
- Cooler transported in the horizontal position requires the drain pan, located on top of the compressor, be checked for proper location.
- For proper operation, locate the cooler on a leveled counter top.
- Do not locate the appliance very close to walls, this could damage the electric cord and may block the air circulation to the appliance. Keep the cooler a distance of at least 4" from wall.
- Do not block the air intake that ventilates the condenser unit.

ELECTRIC CONNECTION

- Our models operate with an 115V~60Hz power supply. Check the electrical outlet for proper voltage.
- Warning: Do not plug other electrical appliances into cooler
  outlet. The coolers are supplied with 8ft length electric cord. Do not use extension cords. Provide an outlet just for the cooler. If the cord is damaged replace it and do not try to repair it.
- For your own safety and for protection of the cooler, verify the existence of the ground circuit in the electrical power supply. In case of doubts, ask the assistance of an authorized electrician.

START

- Plug the cabinet into the electrical outlet; operate the cooler for three hours. This will aid in refrigeration performance.

- Temperature Control: Do not adjust the temperature control. The temperature control is factory set to provide maximum performance.

LIGHT CONTROL

The inside light is controlled by the power.

MAINTENANCE

Cleaning

- Before cleaning the appliance always remember to unplug it.
- Unplug the cooler at the electrical outlet; never pull the service cord.
- Do not use sharp or pointed objects for cleaning.
- Clean the inside cabinet of the cooler with a clean damp cloth or with neutral soap. Avoid damage by never using abrasive or flammable cleaning products.
- Clean the condenser at least once a month with a vacuum cleaner or a brush to eliminate the dust accumulation.

Power failure

Please minimize the frequency of opening the door during a power failure. Most power failures are corrected within a few hours and the temperature of your cooler will not be affected.

If the power will be off for an extended period, proper procedure should be followed for the stored cans.

Non usage for extended time frames: if your cooler is unused for extended period, it is best to remove the cans, unplug and clean your cooler. Also please open the door to avoid possible formation of condensation, mould or odors.

Moving the cooler

- Take out all the cans.
- Secure all loose parts inside the cooler.
- Tape the door shut.
- During transportation, make sure that the cooler is in the upright position.

Drip pan

- When the compressor stops working, water drops will drain through the outlet in the inner back wall into the drain pan (above the compressor).
- If the drain pan needs to be cleaned, pull the drain pan forward gently and reinstall it after cleaning.

TROUBLESHOOTING

If your cooler does not work properly, please note the following suggestions before your attempt to repair.

Your cooler does not work:

- Check the electrical outlet for power, and that the plug is properly inserted.
- Check the condenser for proper cleaning.
- The circuit breaker is tripped or the fuse is blown.

Your cooler makes too much noise:

- Check that the cooler is level.

Compressor turns on and off frequently:

- The room temperature is higher than normal.
- The door is not closed completely.
- The door gasket is not sealed well.
- There is insufficient clearance around the cooler.
- The temperature is not set properly.

- The cycling frequency will reduce when all of the cans reach the set temperature.

The following is not a malfunction:

- It is normal to hear gurgling sounds caused by the flow of refrigerant when each cooling cycle ends.

CIRCUIT DIAGRAM

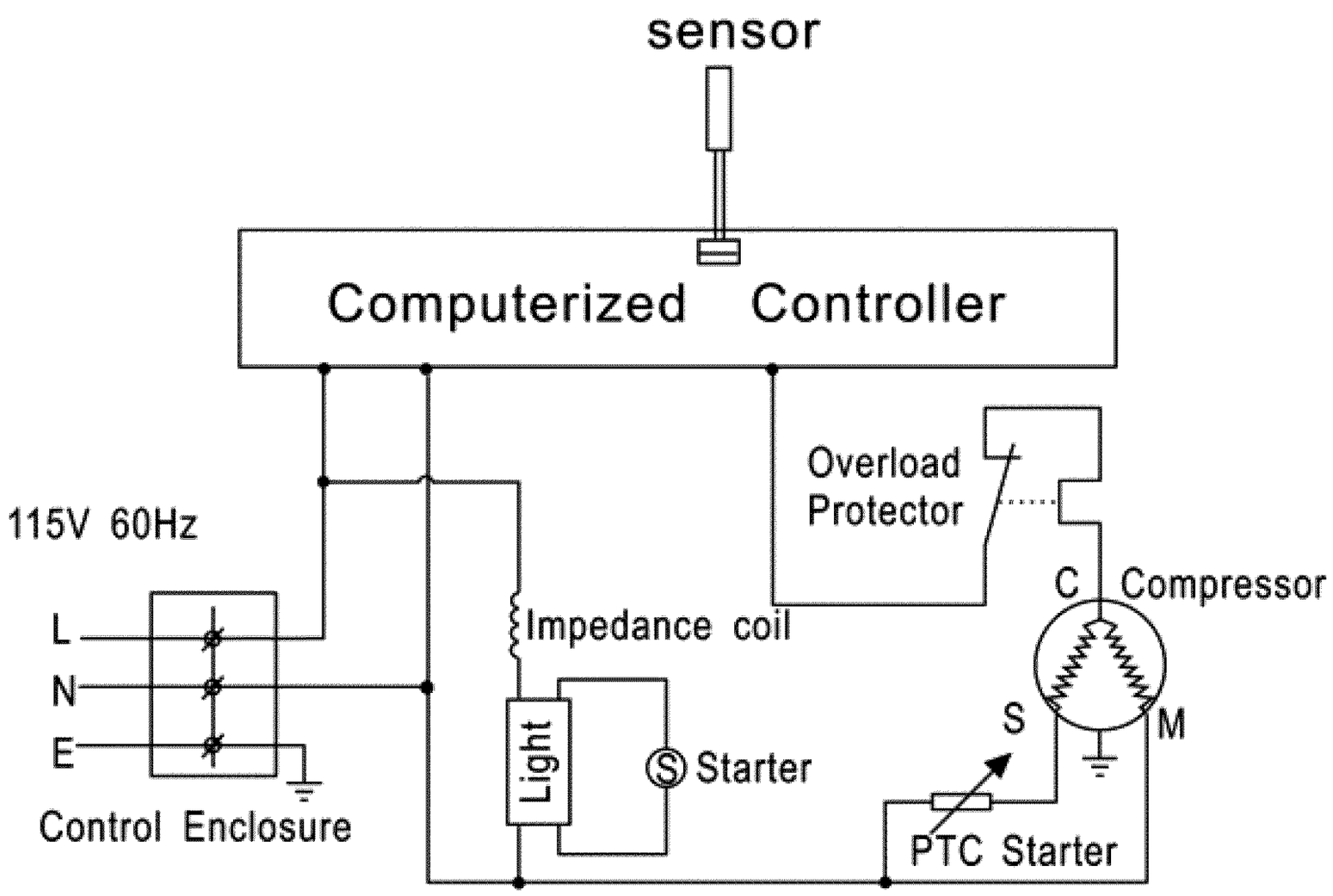

SC-1