TECHNICAL MANUAL

FREEZER	**: F23-S, F23-SH**
	F49-S, F49-SH
	F72-S, F72-SH
REFRIGERATOR	**: R23-S, R23-SH, R23-G**
	R49-S, R49-SH, R49-G
	R72-S, R72-SH, R72-G
MERCHANDISERS	**: GR26H, GR48S, GR72H**

Standex®
Food Service Equipment Group

A. GENERAL

1. SPECIFICATION - A3

1) GENERAL

2) MAIN COMPONENTS

2. REFRIGERATION CYCLE - A9

3. TROUBLE SHOOTING - A11

1) CHECKING THE POWER SUPPLY

2) CHECKING THE POWER SUPPLY OF CONTROL BOARD

3) CHECKING THE CONTROL PART OF REFRIGERATION CYCLE

4) CHECKING THE DEFROST PART

5) WHEN THE UNIT DOES NOT COOL

6) WHEN THERE IS A ABNORMAL NOISE

7) WHEN THE TEMPERATURE DOES NOT DISPLAY

8) WHEN THE LAMP DOES NOT LIGHT

9) CHECKING SENSOR

4. FEATURE CHART - A22

5. WIRING DIAGRAM - A28

6. REPLACEMENT OF COMPONENTS - - - - - - - - - - - - - - - - - - A37

1. SPECIFICATION

1.1 GENERAL - SOLID DOOR FREEZER & REFRIGERATOR (FULL DOOR / HALF DOOR)

PRODUCT		**SOLID (FULL/HALF) DOOR FREEZER**			**SOLID (FULL/HALF) DOOR REFRIGERATOR**		
MODEL		F23-S / F23-SH	F49-S / F49-SH	F72-S / F72-SH	R23-S / R23-SH	R49-S / R49-SH	R72-S / R72-SH
Capacity		650ℓ(23ft³)/ 648ℓ(22.9ft³)	1,385ℓ(49ft³)/ 1,381ℓ(48.8ft³)	2,035ℓ(72ft³)/ 2,028ℓ(71.6ft³)	650ℓ(23ft³)/ 648ℓ(22.9ft³)	1,385ℓ(49ft³)/ 1,381ℓ(48.8ft³)	2,035ℓ(72ft³)/ 2,028ℓ(71.6ft³)
Net Capacity		552ℓ(19.5ft³)/ 551ℓ(19.4ft³)	1,195ℓ(42.2 ft³)/ 1,191ℓ(42.1 ft³)	1,790ℓ(63.2ft³)/ 1,782ℓ(63ft³)	552ℓ(19.5ft³)/ 551ℓ(19.4ft³)	1,195ℓ(42.2 ft³)/ 1,191ℓ(42.1 ft³)	1,790ℓ(63.2ft³)/ 1,782ℓ(63ft³)
Exterior Dimension (Including casters Door Handles)	(W)	695㎜ (27.4”)	1,400㎜ (55.2”)	1,980㎜ (78.0”)	695㎜ (27.4”)	1,400㎜ (55.2”)	1,980㎜ (78.0”)
	(D)	838 ㎜ (33”)					
	(H)	2,127 ㎜ (83.7”)					
Interior Dimension	(W)	600㎜ (23.6”)	1,305㎜ (51.4”)	1,885㎜ (74.2”)	600㎜ (23.6”)	1,305㎜ (51.4”)	1,885㎜ (74.2”)
	(D)	635 ㎜ (25”)					
	(H)	1,545 ㎜ (60.8”)					
Product Weight		124kg(273 lb)/ 126kg(278 lb)	194kg(428 lb)/ 198kg(437 lb)	255kg(562 lb)/ 260kg(573 lb)	121kg(267 lb)/ 123kg(271 lb)	186kg(410 lb)/ 190kg(419 lb)	253kg(558 lb)/ 258kg(569 lb)
Door Type		Swing 1EA/ Swing 2EA	Swing 2EA/ Swing 4EA	Swing 3EA/ Swing 6EA	Swing 1EA/ Swing 2EA	Swing 2EA/ Swing 4EA	Swing 3EA/ Swing 6EA
Door Material		Stainless steel (STS)					
Shelves		4EA	8EA	12EA	4EA	8EA	12EA
Power Voltage		AC 115V/60Hz					
Plug in - Installation		NEMA 5-15P		NEMA 5-20P	NEMA 5-15P		
Amps		8.5A	10.5A	12.0A	7.5A	7.5A	10.0A
Compressor		3/5HP	4/5HP	1HP	1/3HP	1/3HP	3/5HP
Refrigerant		R-404A			R-134a		R-404A
		250 g (8.8 oz)	340 g (12.0 oz)	400 g (14.1 oz)	210 g (7.4 oz)	220 g (7.8 oz)	300 g (10.6 oz)
Range of Temperature		Below -18℃ (0°F)			0℃ ~ 4℃ (+32°F ~ +40°F)		
Door auto-close equipment		Auto-close for Spring					
Door stop		120˚ Stop					
Air suction equipment		Air damper					
Caster		4” × 4EA		4” × 6EA	4” × 4EA		4” × 6EA
Condensing unit		Sliding Type					

◈ Above specifications are subjected to change without prior notice for quality improvement.

◈ The nameplate(includes Serial Number) is located on the upper left of the cabinet interior.

1.2 MAIN COMPONENTS - SOLID DOOR FREEZER & REFRIGERATOR

PRODUCT	**SOLID (FULL/HALF) DOOR FREEZER**			**SOLID (FULL/HALF) DOOR REFRIGERATOR**		
MODEL	F23-S / F23-SH	F49-S / F49-SH	F72-S / F72-SH	R23-S / R23-SH	R49-S / R49-SH	R72-S / R72-SH
Compressor (Manufacture)	NEK2150GK (Embraco)	NT2178GKV (Embraco)	NT2192GKV (Embraco)	NW108LHB1 (DAEWOO-Korea)		NEK2150GK (Embraco)
Compressor Capacity(kcal/h)	LBP 628	LBP 903	LBP 1051	LBP 325		LBP 628
Type of Compressor motor	CSR					
Compressor O.L.P	T0873/G9	MST18RN-3041	CRA1773-3029 GA3RMU0002	4TM801SFBZZ-52		T0873/G9
Compressor Relay	RVA9AD3C-121		RVA2AE3C-105	R6R8MD22SS		RVA9AD3C-121
Starting Capacitor	189~227 ㎌ / 165V	243~292 ㎌ / 165V		125 ㎌ / 200V		189~227 ㎌ / 165V
Running Capacitor	25 ㎌ / 400V	35 ㎌ / 400V		16 ㎌ / 250V		25 ㎌ / 400V
Type of Evaporator	Cu pipe + Al fin + Blue color coating					
Evaporator pipe Diameter	9.52mm (3/8")		12.7mm (1/2")	9.52mm (3/8")		
Cooling Fan Motor	IS3225LTSA, 120V/60Hz					
Type of Condenser	Cu pipe + Al fin					
Condenser pipe Diameter	7.00mm (0.28")					
Condenser Fan Motor	MA7425W1, 120V/60Hz					
Dryer	OD 25.4mm (1"), XH-9, 30g(1.06oz)					
Temperature Control	Thermistor					
Running Indication	Digital Display					
Interior Temp. Indication	Digital Display					
Interior Lamp (Incandescent lamp)	40W × 1EA		40W × 2EA	40W × 1EA		40W × 2EA
Defrost for evaporator	Heated defrost (Control of thermistor)			Off cycle		
Defrost sheath heater	450W	670W	944W	-		
Defrost pan heater	60W	90W	128W	-		
Drain heater	9W			-		
Door switch	SP201R-7DR, AC125V					
Power switch	SL112A, AC125V/12A					

2.1 GENERAL - GLASS DOOR REFRIGERATOR

PRODUCT		**GLASS (FULL) DOOR REFRIGERATOR**		
MODEL		R23-G	R49-G	R72-G
Capacity		650 ℓ (23 ft³)	1,385 ℓ (49 ft³)	2,035 ℓ (72 ft³)
Net Capacity		552 ℓ (19.5 ft³)	1,195 ℓ (42.2 ft³)	1,790 ℓ (63.2 ft³)
Exterior Dimension (Including casters Door Handles)	(W)	695㎜ (27.4”)	1,400㎜ (55.2”)	1,980㎜ (78.0”)
	(D)	835 ㎜ (32.9”)		
	(H)	2,127 ㎜ (83.7”)		
Interior Dimension	(W)	600㎜ (23.6”)	1,305㎜ (51.4”)	1,885㎜ (74.2”)
	(D)	635 ㎜ (25”)		
	(H)	1,545 ㎜ (60.8”)		
Product Weight		126kg (278 lb)	200kg (441 lb)	271kg (597 lb)
Door Type		Swing 1EA	Swing 2EA	Swing 3EA
Door Material		Glass + Al(A6063S)		
Shelves		4EA	8EA	12EA
Power Voltage		AC 115V/60Hz		
Plug in - Installation		NEMA 5-15P		
Amps		7.5A	7.5A	8.5A
Compressor		1/3HP	1/3HP	3/5HP
Refrigerant		R-134a	R-134a	R-404A
		230 g (8.1 oz)	230 g (8.1 oz)	330 g (11.6 oz)
Range of Temperature		0℃ ~ 4℃ (+32°F ~ +40°F)		
Door auto-close equipment		Auto-close for Spring		
Door stop		120˚ Stop		
Air suction equipment		Air damper		
Caster		4” × 4EA		4” × 6EA
Condensing unit		Sliding Type		

◈ Above specifications are subjected to change without prior notice for quality improvement.

◈ The nameplate(includes Serial Number) is located on the upper left of the cabinet interior.

2.2 MAIN COMPONENTS - GLASS DOOR REFRIGERATOR

PRODUCT	**GLASS (FULL) DOOR REFRIGERATOR**		
MODEL	R23-G	R49-G	R72-G
Compressor (Manufacture)	NW108LHB1 (DAEWOO-Korea)		NEK2150GK (Embraco)
Compressor Capacity(kcal/h)	LBP 325		LBP 628
Type of Compressor motor	CSR		
Compressor O.L.P	4TM801SFBZZ-52		T0873/G9
Compressor Relay	R6R8MD22SS		RVA9AD3C-121
Starting Capacitor	125 ㎌ / 200V		189~227 ㎌ / 165V
Running Capacitor	16 ㎌ / 250V		25 ㎌ / 400V
Type of Evaporator	Cu pipe + Al fin + Blue color coating		
Evaporator pipe Diameter	9.52mm (3/8")		
Cooling Fan Motor	IS3225LTSA, 120V/60Hz		
Type of Condenser	Cu pipe + Al fin		
Condenser pipe Diameter	7.00mm (0.28")		
Condenser Fan Motor	MA7425W1, 120V/60Hz		
Dryer	OD 25.4mm (1"), XH-9, 30g(1.06oz)		
Temperature Control	Thermistor		
Running Indication	Digital Display		
Interior Temp. Indication	Digital Display		
Interior Lamp (LED)	6W x 1EA	6W x 2EA	6W x 3EA
Defrost for evaporator	Off cycle		
Defrost sheath heater	-		
Defrost pan heater	-		
Drain heater	-		
Door switch	SP201R-7DR, AC125V		
Power switch	SL112A, AC125V/12A		
Light switch	RL1-3, 16A/250V, ON-OFF		

3.1 GENERAL - MERCHANDISERS

PRODUCT		**MERCHANDISERS**		
MODEL		GR26H	GR48S	GR70H
Capacity		736 ℓ (26 ft³)	1359 ℓ (48 ft³)	1982 ℓ (70 ft³)
Net Capacity		677 ℓ (23.9 ft³)	1339 ℓ (47.3 ft³)	1877 ℓ (66.3 ft³)
Exterior Dimension (Including casters Door Handles)	(W)	720㎜ (28.4”)	1,350 ㎜ (53.2”)	1,980 ㎜ (78”)
	(D)	844㎜ (33.3”)	780 ㎜ (30.7”)	835 ㎜ (32.9”)
	(H)	2,017㎜ (79.4”)	2,012 ㎜ (79.2”)	2,126 ㎜ (83.7”)
Interior Dimension	(W)	640㎜ (25”)	1,280 ㎜ (50.4”)	1,885 ㎜ (74.2”)
	(D)	719㎜ (28.3”)	642 ㎜ (25.3”)	635 ㎜ (25”)
	(H)	1,584㎜ (62.4”)	1,562 ㎜ (61.5”)	1,545 ㎜ (60.8”)
Net Weight		130kg (287 lb)	215kg (474 lb)	325kg (716 lb)
Door Type		Swing 1EA	Sliding 2EA	Swing 3EA
Door Material		Glass + PVC	Glass + PVC	Glass + Al
Shelves		4EA	8EA	12EA
Power Voltage		AC 115V/60Hz		
Plug in - Installation		NEMA 5-15P		
Amps		3.9A	10.0A	10.0A
Compressor		1/4 HP	1/2 HP	3/5 HP
Refrigerant		R-134a		R-404A
		300g (10.6 oz)	460g (16.2 oz)	360g (12.7 oz)
Range of Temperature		0℃ ~ 4℃ (32°F ~ 40°F)		
Door auto-close equipment		Auto-close for Spring	Auto-close for slope	Auto-close for Spring
Door stop equipment		120° Stop	-	120° Stop
Air suction equipment		-	-	Air damper
Caster		Adjust foot 4EA	Adjust foot 6EA	Adjust foot 6EA
Condensing unit		Sliding Type		
Door switch		-	-	-
Power(or Lamp) switch		SL112A, AC125V/12A		

◈ Above specifications are subjected to change without prior notice for quality improvement.

◈ The nameplate(includes Serial Number) is located on the upper left of the cabinet interior.

3.2 MAIN COMPONENTS - MERCHANDISERS

PRODUCT	**MERCHANDISERS**		
MODEL	GR26H	GR48S	GR70H
Compressor (Manufacture)	SK182C-L2U (SAMSUNG)	CAJ4476Y(A) (Tecumseh-France)	NEK2150GK (Embraco)
Compressor Capacity(kcal/h)	LBP 256	HBP 1946	LBP 628
Type of Compressor motor	RSCR	CSIR	CSR
Compressor O.L.P	4TM444NHBYY	CRA38014	T0873/G9
Compressor Relay	J531Q32E4R7M1802	3ARR3*2M*	RVA9AD3C-121
Starting Capacitor	-	250 ㎌/160V	189~227 ㎌ / 165V
Running Capacitor	12 ㎌/250V	-	25 ㎌ / 400V
Type of Evaporator	Cu pipe + Al fin		
Evaporator pipe Diameter	9.52 mm (3/8")		
Cooling Fan Motor	IS3225LTSA, 120V/60Hz		
Type of Condenser	Cu pipe + Al fin		
Condenser pipe Diameter	9.52 mm (3/8")		7.00mm (0.28")
Condenser Fan Motor	MA7425W1, 120V/60Hz		
Dryer	OD 25.4mm (1"), XH-9, 30g(1.06oz)		
Temperature Control	Thermostat (GNF-250L)	Thermostat (GNF-240L)	Thermostat (GNF-246L)
Running Indication	-		
Interior Temp. Indication	-		
Interior Lamp (Fluorescent lamp)	32W × 1EA	32W × 1EA	6W(LED) × 3EA
Ad. Panel Fluorescent Lamp	20W × 1EA	32W × 1EA	20W(LED) × 1EA
Ballast	32W(Double)×1EA	32W(Double)×1EA	-
Ballast Name (Manufacture)	B232I120RH-A (ADVANCE)	B232I120RH-A (ADVANCE)	-
SMPS	-	-	60W(DC12V)
SMPS Name (Manufacture)	-	-	LVP-60-12 (MEAN WELL)
Defrost for evaporator	Off cycle		
Defrost sheath heater	-	-	-
Defrost pan heater	-	-	-
Drain heater	-	-	-

2. REFRIGERATION CYCLE

Mechanical refrigeration is accomplished by continuously circulating, evaporating, and condensing a fixed supply of refrigerant in a closed system. Evaporation occurs at allow temperature and pressure while condensation occurs at high temperature and pressure. Thus it is possible to transfer heat fom an area of low temperature (i.e., refrigerated compartment) to an area of high temperature (i.e., surrounding of refrigerator).

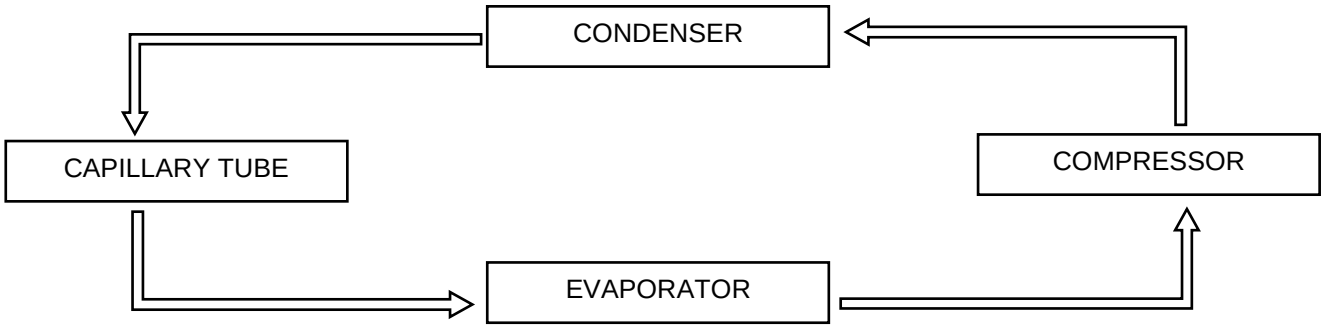

THE BASE REFRIGERATION CYCLE

Beginning the cycle at the evaporator inlet the low pressure liquid expands, absorbs heat (so refrigerator inner-cabinet is cooled), and evaporates, changing to allow low pressure gas at the evaporator outlet.

The compressor pumps this gas from the evaporator, increases its pressure, and discharges the high pressured- temperature gas to the condenser.

The condenser lets high pressured- temperature gas emit the heat (so surrounding of the condenser is warmed) in order to make it condense.

The capillary tube prevents high pressured- temperature liquid from entering the evaporator in order to lower the pressure in the evaporator and control the flow of refrigerant into the evaporator automatically.

Eventually the desired air temperature in refrigerator inner-cabinet is reached, the thermostat (temperature controller) will break the electrical circuit to the compressor motor and stop the compressor.

As the temperature of the air rises, the thermostat (or controller) remakes the electrical circuit. The compressor starts, and cycle continues.

The schematic refrigeration (or freezing) cycle of F23/F49/F72/R23/R49/R72/GR26/GR48/GR70 is like below.

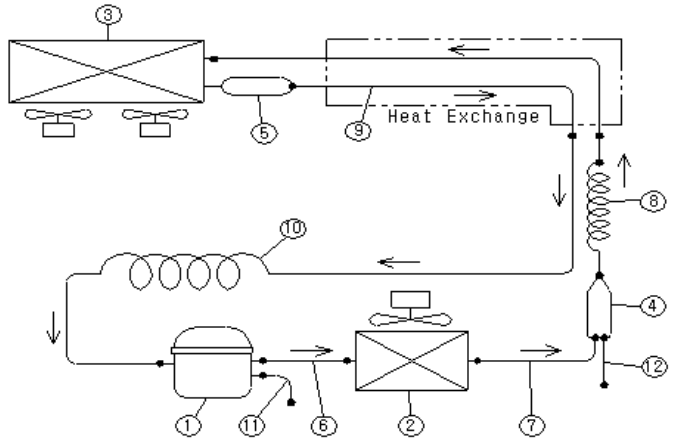

MODEL	COMPRESSOR
F23-S/SH, R72-G,GR70H	NEK2150GK
F49-S/SH	NT2178GKV
F72-S/SH	NT2192GKV
R23/R49-S/SH,R23/R49-G	NW108LHB1
R72-S/SH	CAJ4461Y(A)
GR26H	SK182C-L2U
GR48S	CAJ4476Y(A)

No.	Part Name	Description	Remark
1	COMPRESSOR		
2	CONDENSER	C1220TS-O,H	
3	EVAPORATOR	C1220TS-O,H	
4	DRYER	C1220T-H	
5	ACCUMULATOR	C1220T-1/4H	
6	DISCHARGE PIPE	C1220T-O	
7	DRYER CONNECT PIPE	C1220T-O	
8	CAPILLARY TUBE	C1220T-H	
9	SUCTION PIPE (INNER-CABINET)	C1220T-O	
10	SUCTION PIPE (COMPRESSOR)	C1220T-O	
11	CHARGE PIPE (COMPRESSOR)	C1220T-O	
12	CHARGE PIPE (DRYER)	C1220T-O	

3. TROUBLESHOOTING

1) CHECKING THE POWER SUPPLY

① F23 / F49 / F72 / R23 / R49 / R72

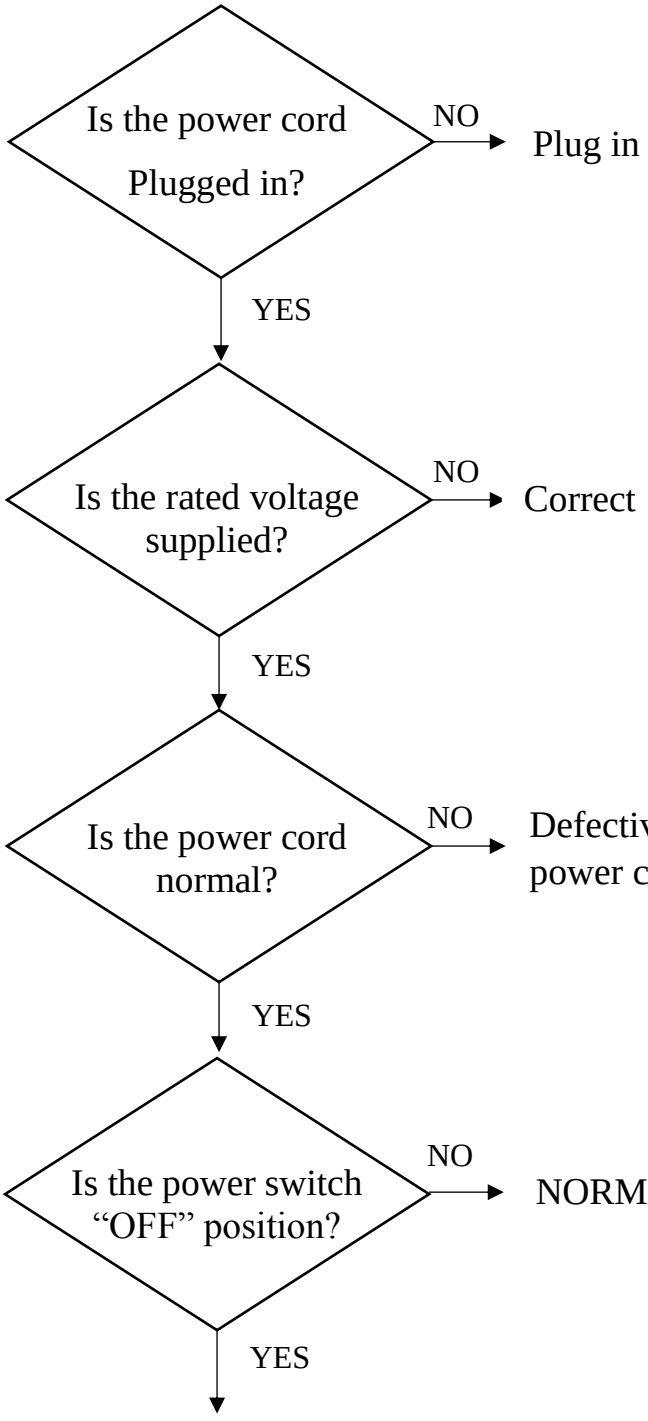

② GR26H / GR48S / GR70H

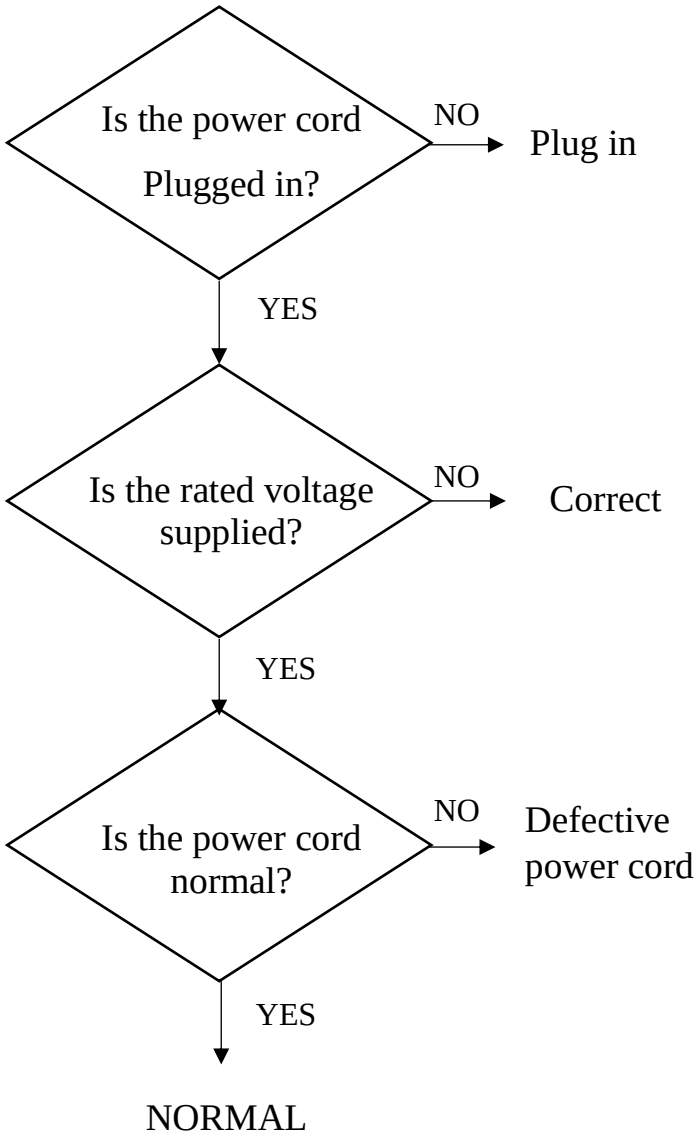

2) CHEKING THE POWER SUPPLY OF CONTROL BOARD

① F23 / F49 / F72 / R23 / R49 / R72

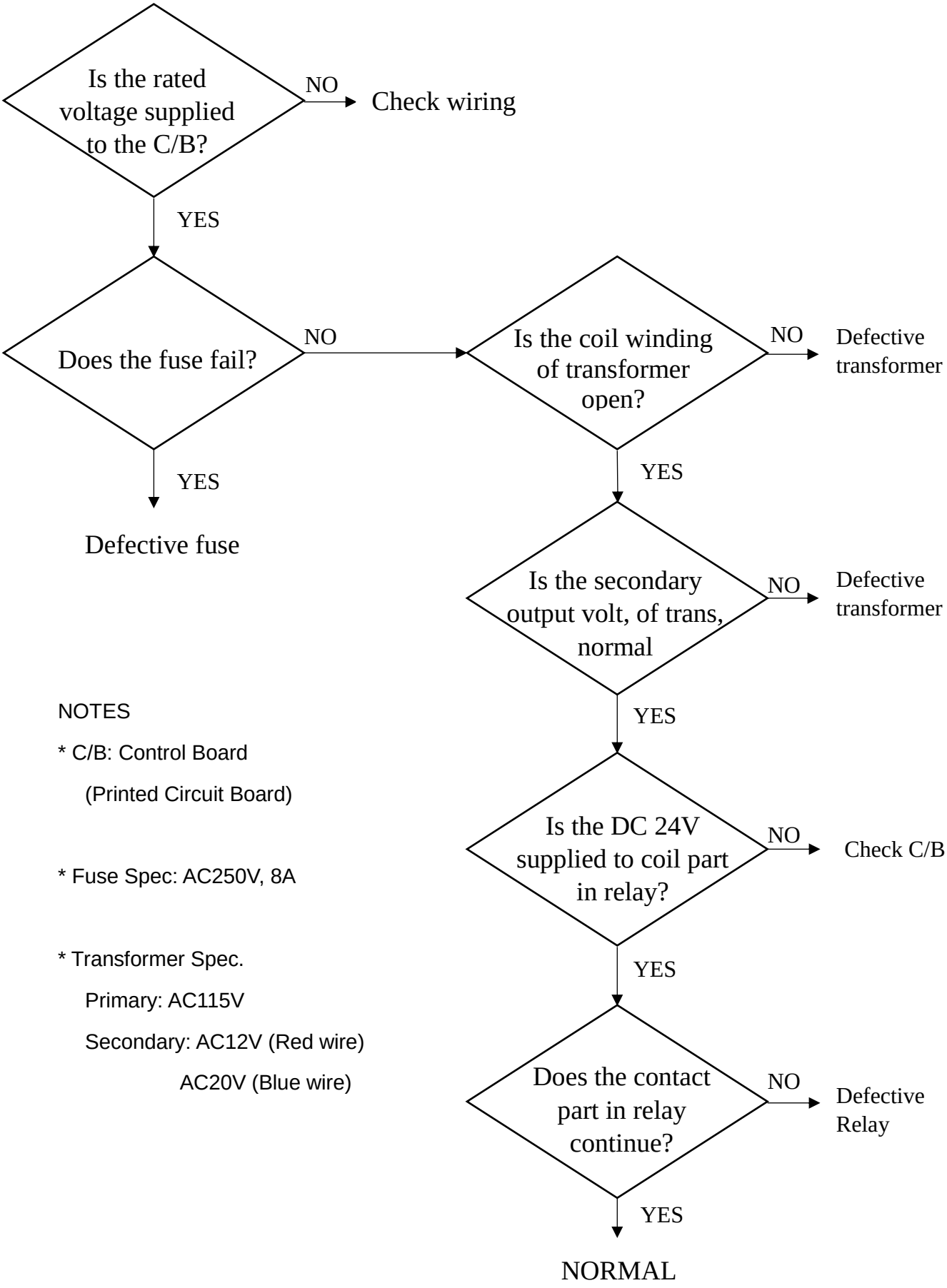

NOTES

* C/B: Control Board
  (Printed Circuit Board)

* Fuse Spec: AC250V, 8A

* Transformer Spec.
  Primary: AC115V
  Secondary: AC12V (Red wire)
  AC20V (Blue wire)

3) CHECKING THE CONTROL PART OF REFRIGERATION CYCLE

① F23 / F49 / F72 / R23 / R49 / R72

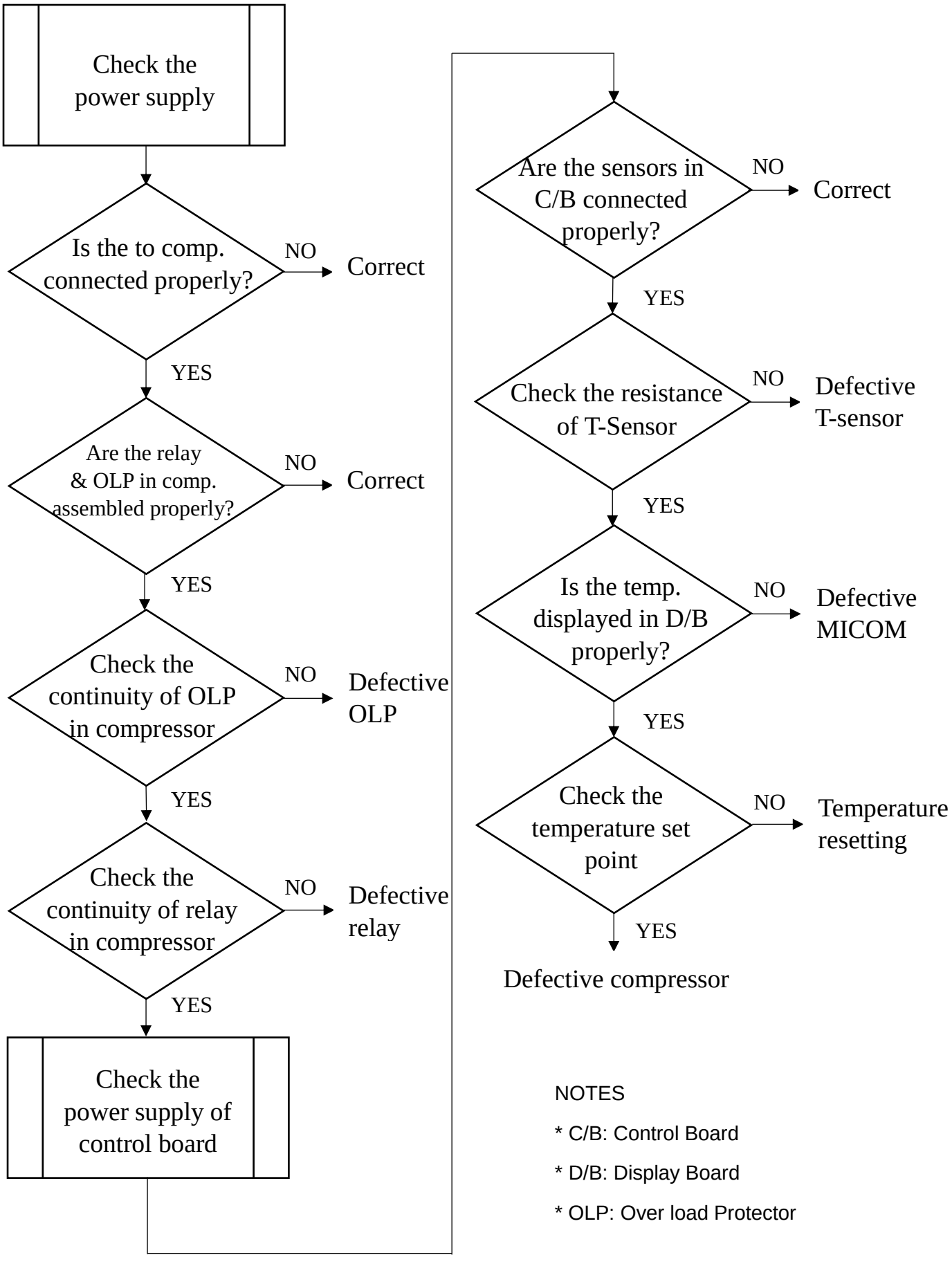

NOTES

* C/B: Control Board
* D/B: Display Board
* OLP: Over load Protector

② GR26H / GR48S / GR70H

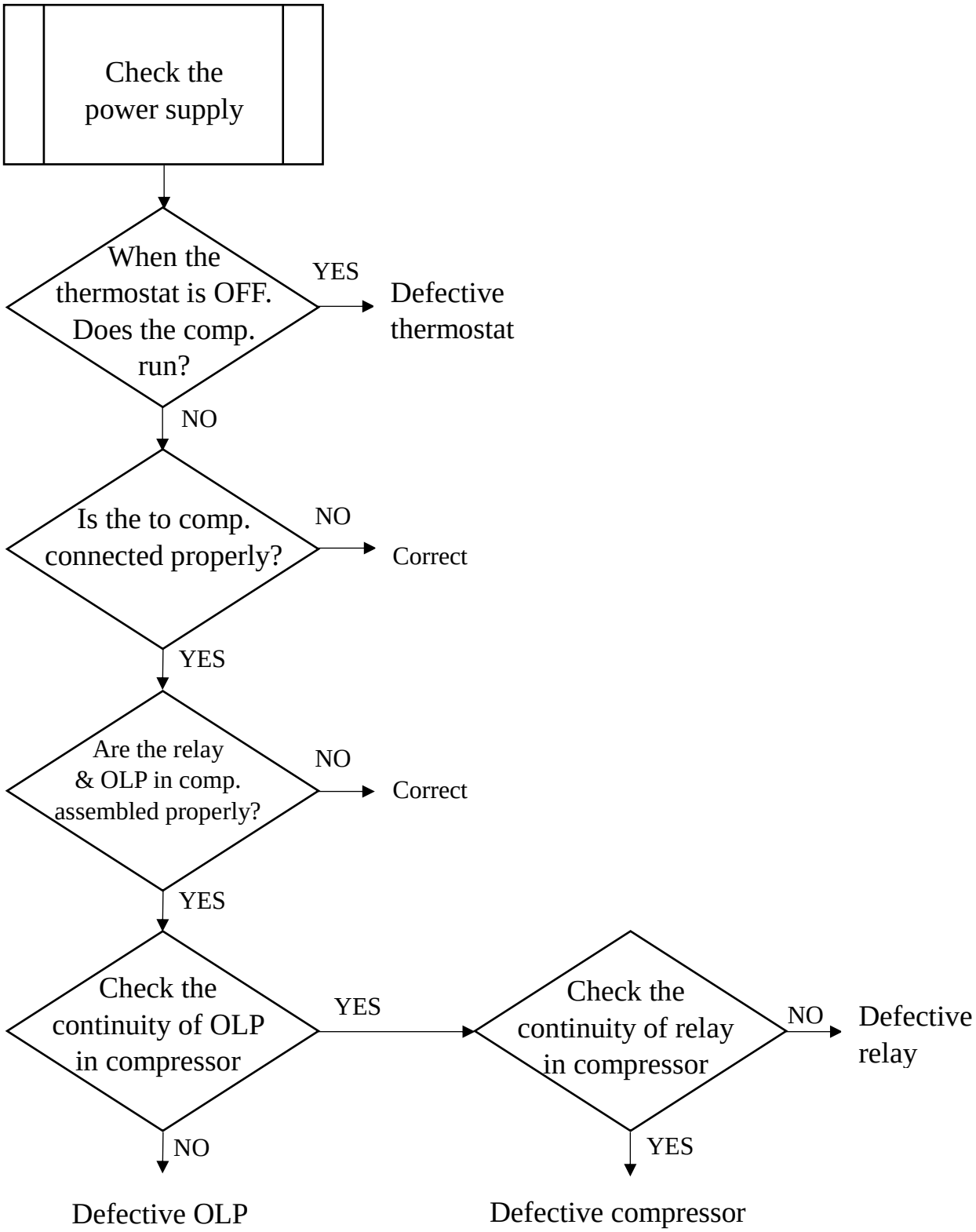

4) CHECKING THE DEFROST PART

① F23 / F49 / F72

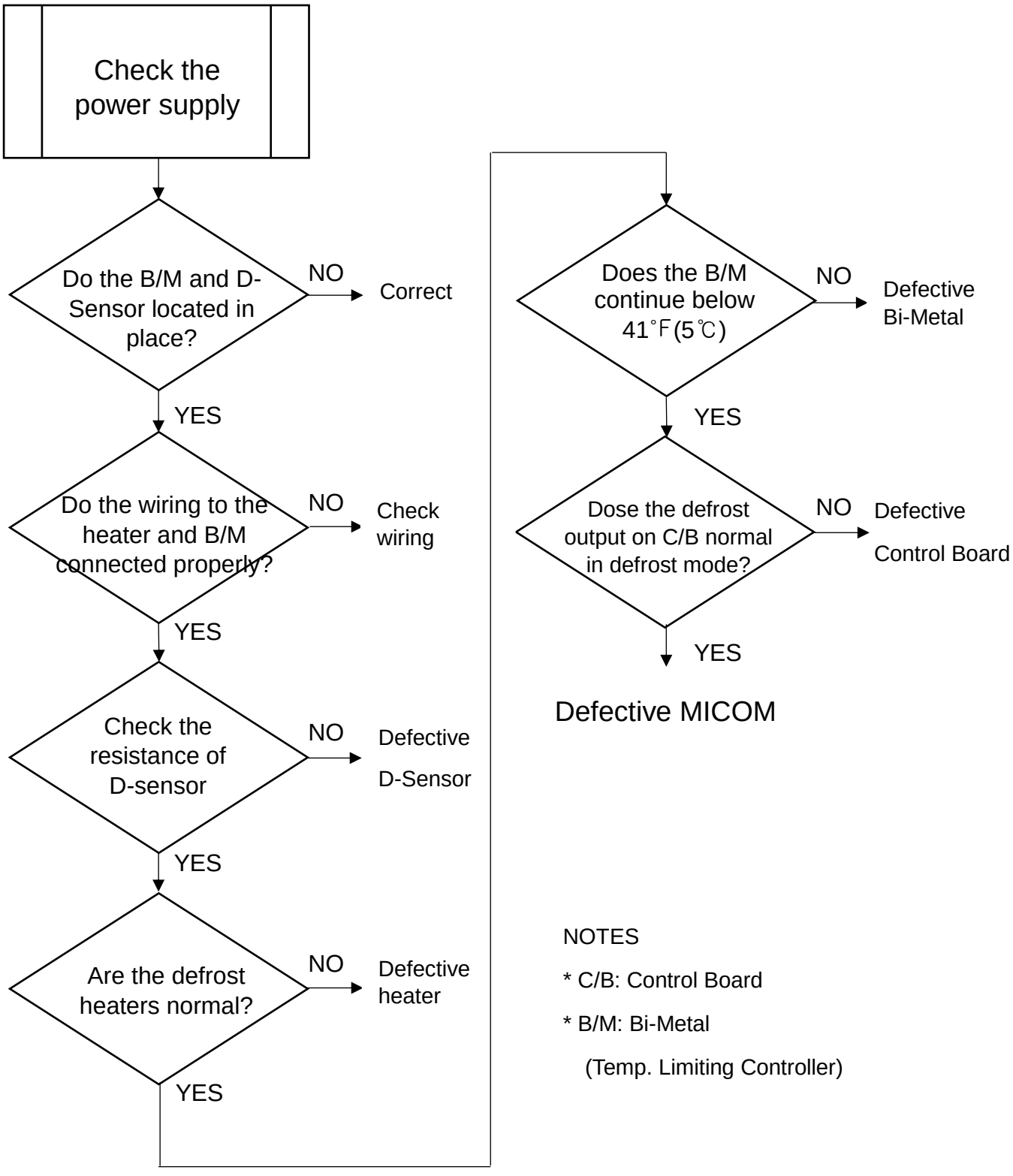

NOTES

* C/B: Control Board
* B/M: Bi-Metal

  (Temp. Limiting Controller)

② R23 / R49 / R72

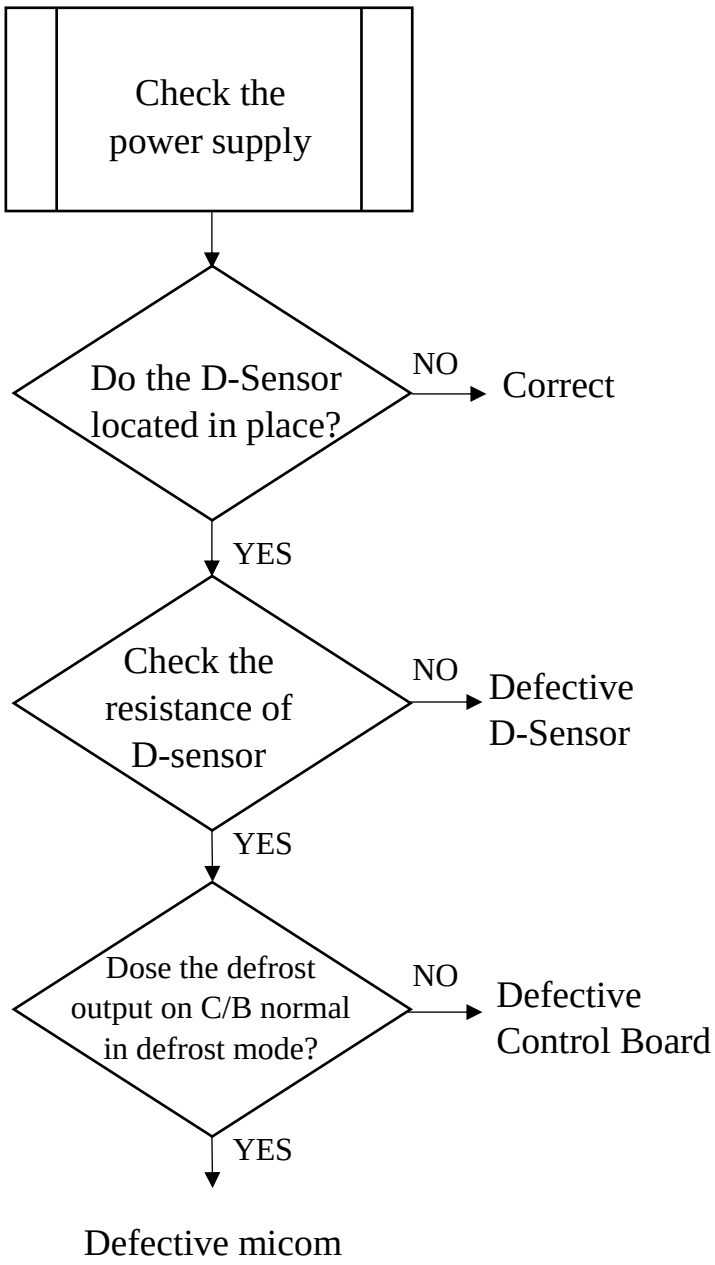

NOTES

* C/B: Control Board

5) WHEN THE UNIT DOES NOT COOL

① All Models

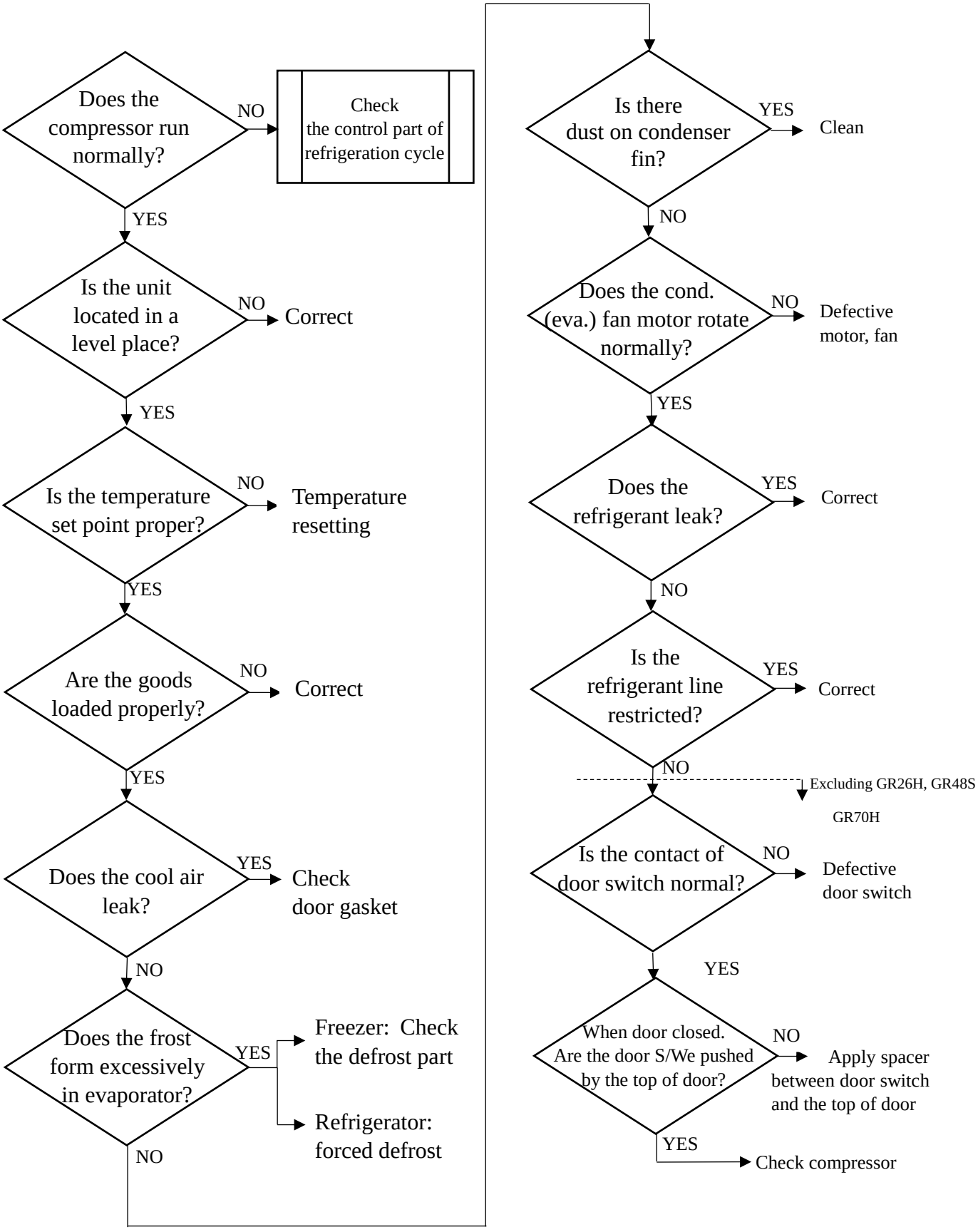

6) WHEN THERE IS A ABNORMAL NOISE

① All Models

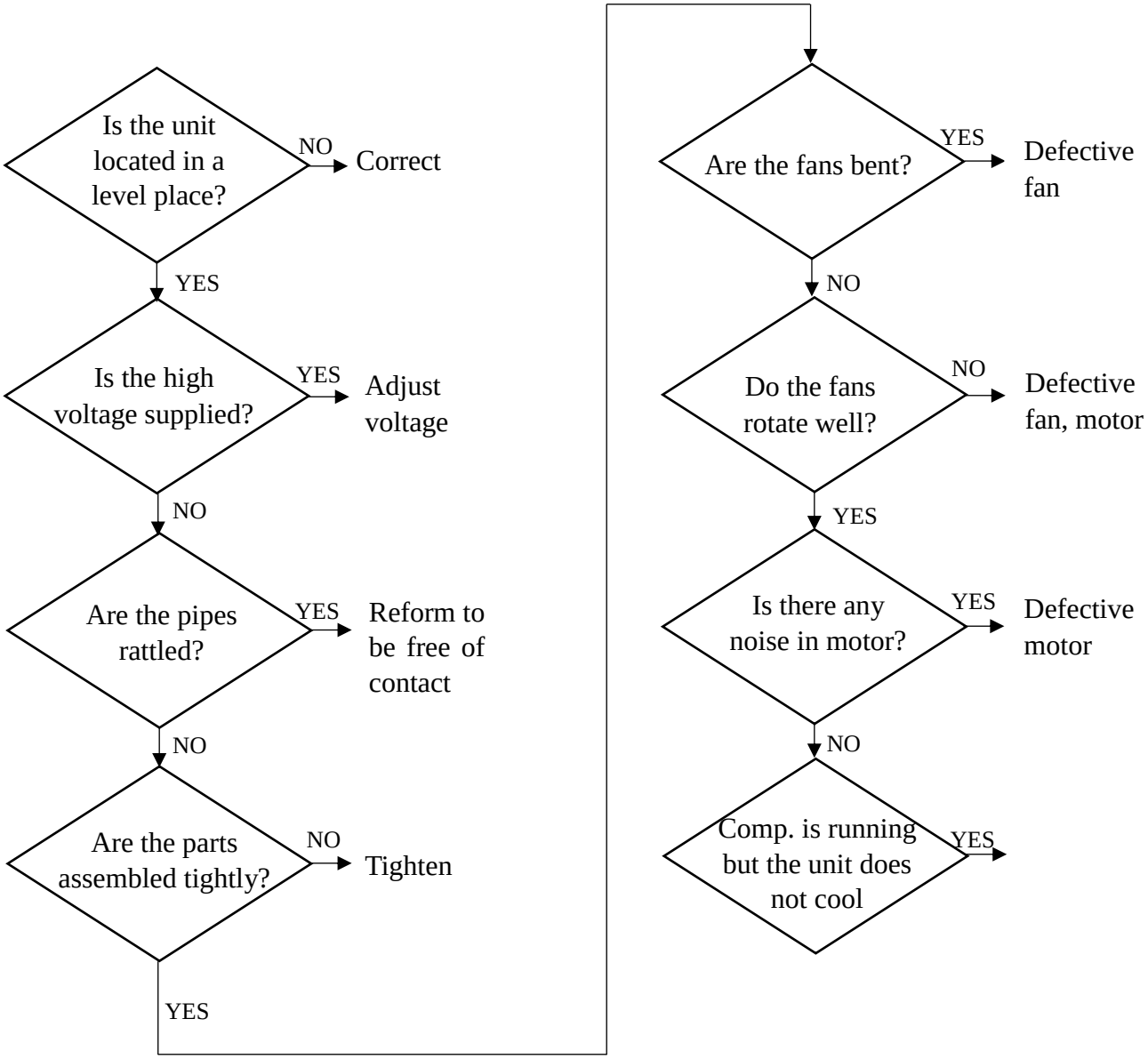

7) WHEN THE TEMPERATURE DOES NOT DISPLAY

① F23 / F49 / F72 / R23 / R49 / R72

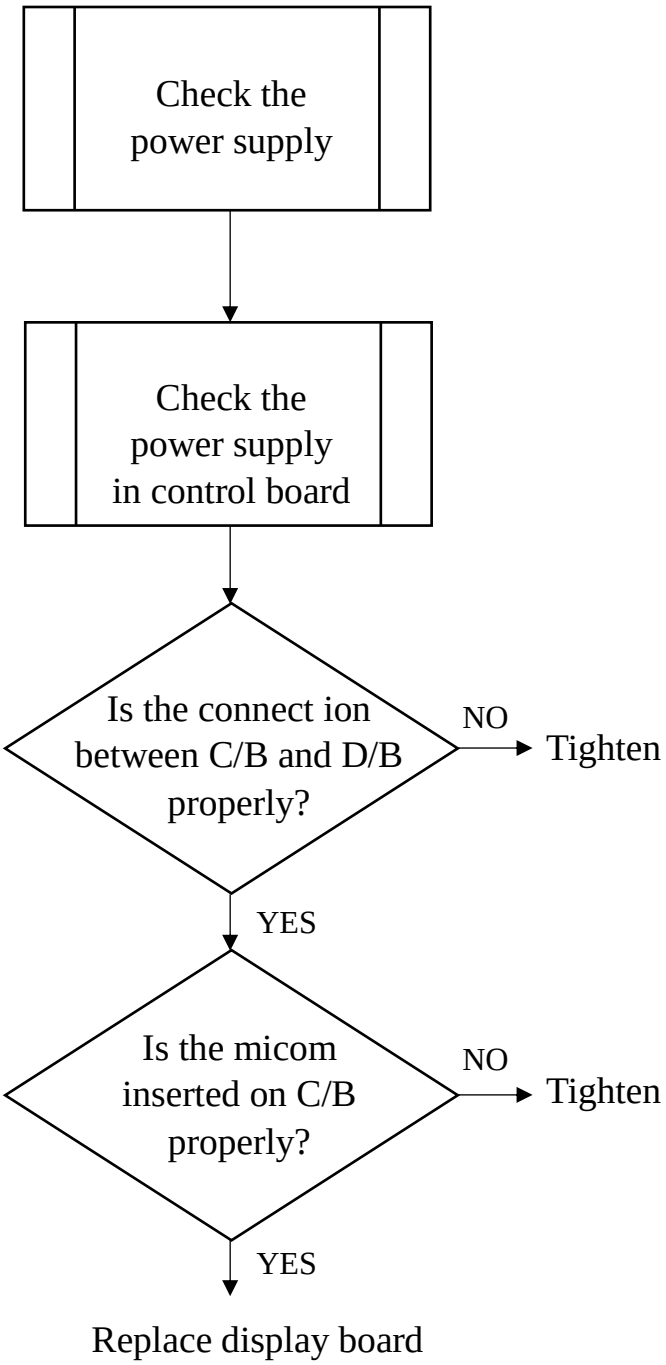

NOTES

* C/B: Control Board

* D/B: Display Board

8) WHEN THE LAMP DOES NOT LIGHT

① F23 / F49 / F72 / R23 / R49 / R72

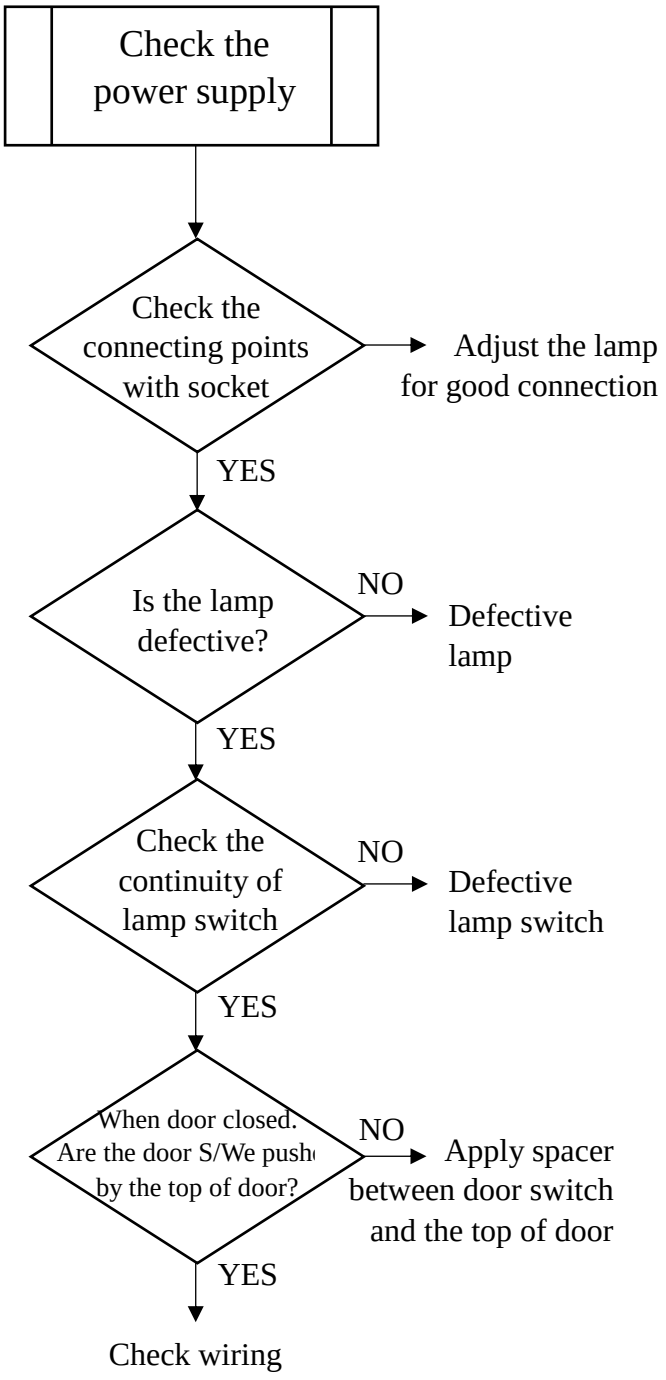

* Incandescence Lamp: 40W

② GR26H / GR48S / GR70H

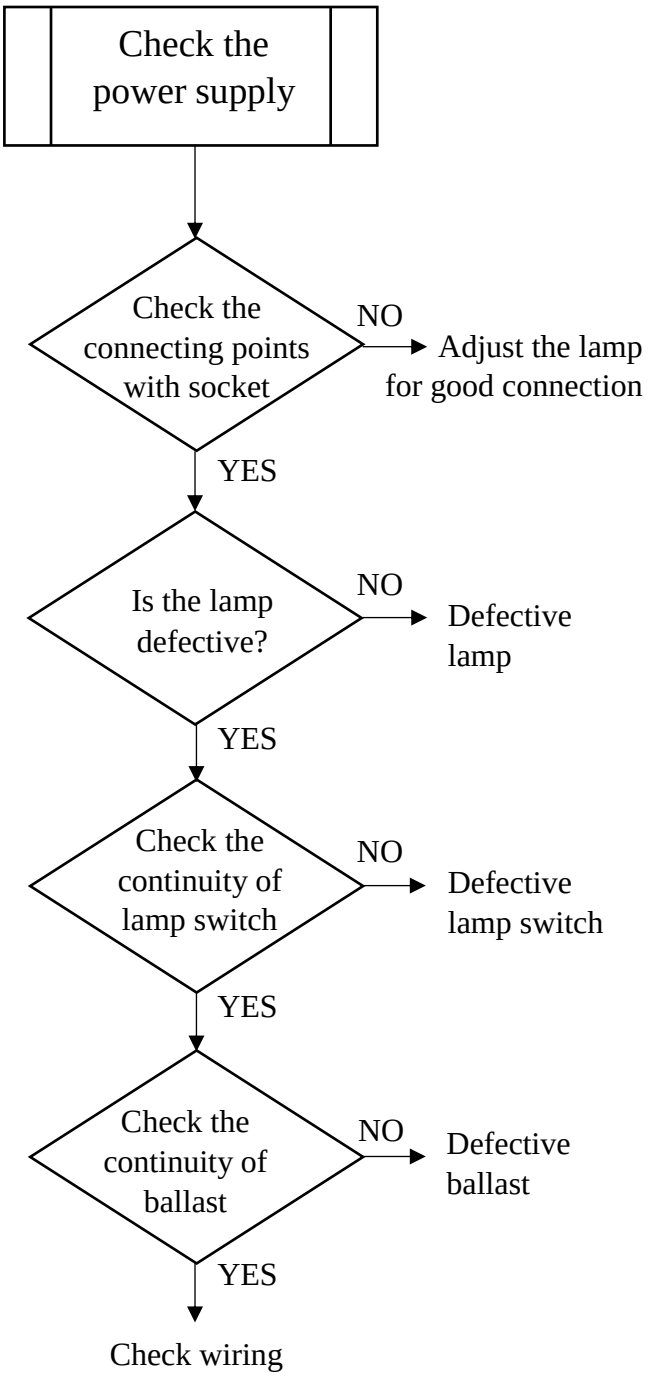

* Fluorescent Lamp: 32W

9) CHECKING SENSOR

Sensor assembly consists of T-sensor (lead wire: orange) and D-sensor (lead wire: blue).
The T-sensor is used for cabinet temperature control and the D-sensor is used for defrost control.

The resistance of the sensor varies depending on temperature.
If you Immerse the sensor in a glass containing ice water for 2 minutes and then check for the resistance between sensor leads, the normal reading is 7.88 ㏀ (T-sensor) / 30 ㏀ (D-sensor).

Temperature (°F/℃)	Resistance (㏀)	
	T-sensor (±6.5%)	D-sensor (±5.5%)
-5 / -21	23.04	79.17
0 / -18	19.76	68.92
10 / -12	14.65	52.61
23 / -5	10.10	37.55
32 / 0	7.88	30.00
41 / 5	6.20	24.13
50 / 10	7.91	19.53
60 / 16	3.82	15.56
70 / 21	3.00	12.48

4. FEATURE CHART

1) F23/R23-S

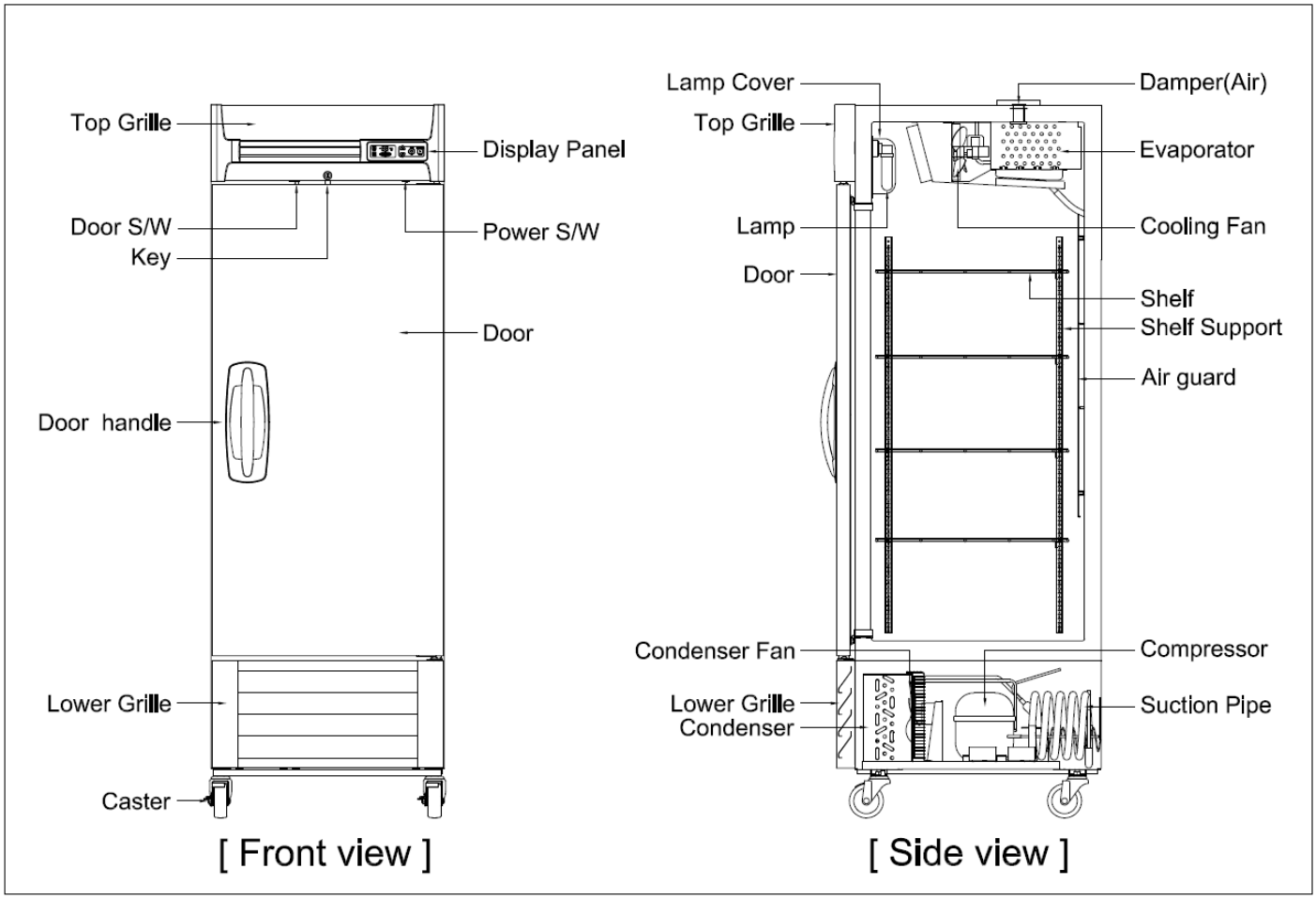

2) F49/R49-S

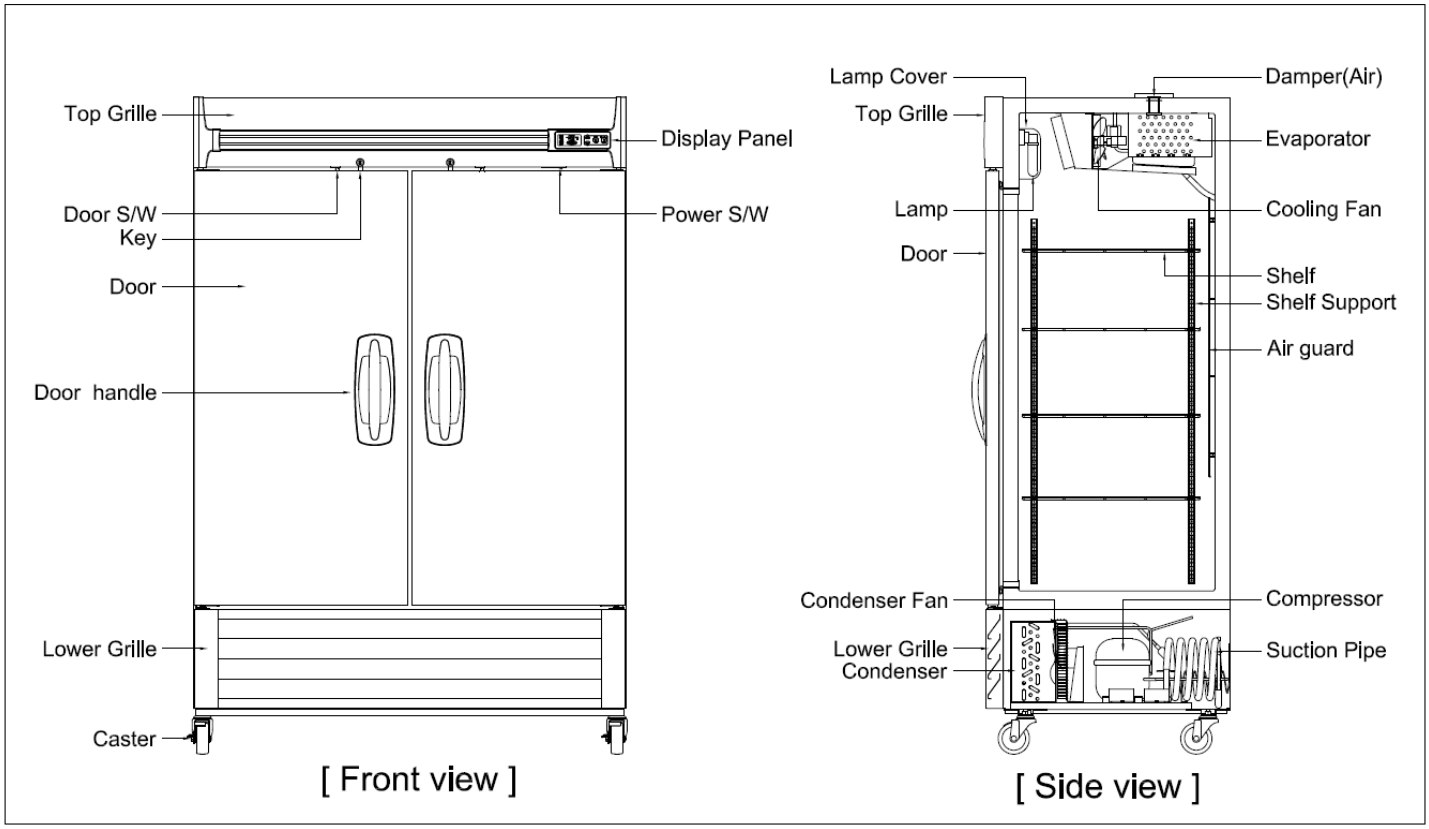

3) F72/R72-S

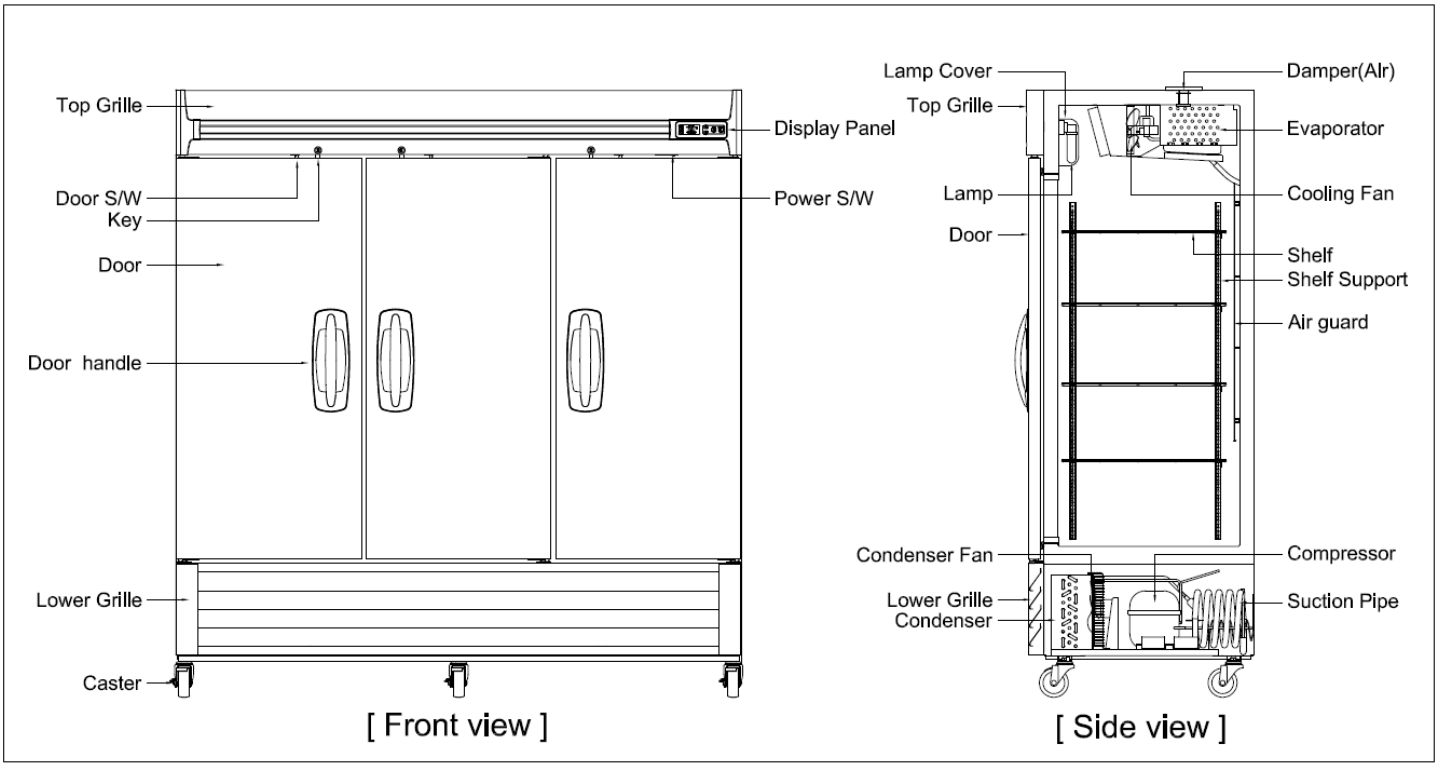

4) F23/R23-SH

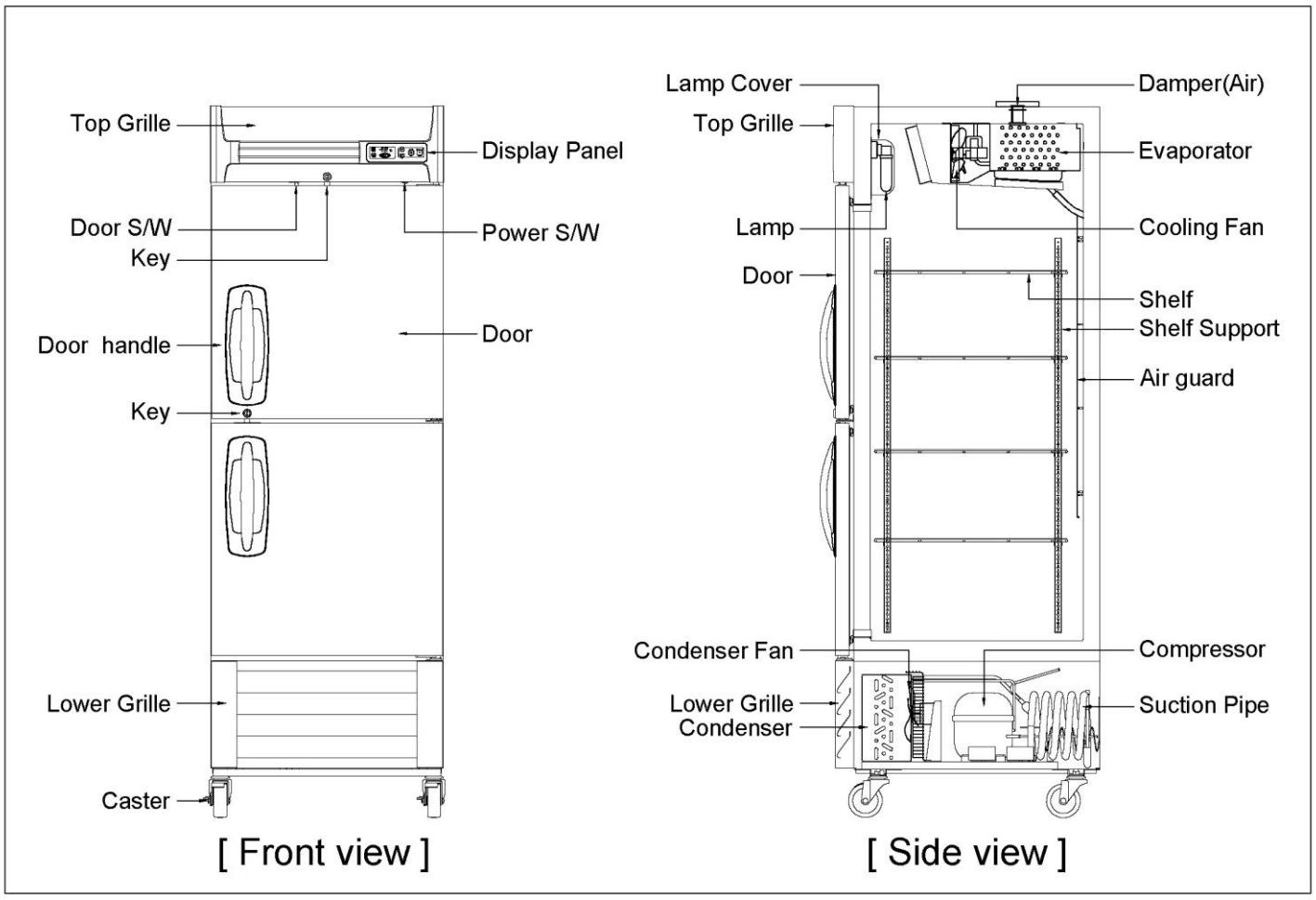

5) F49/R49-SH

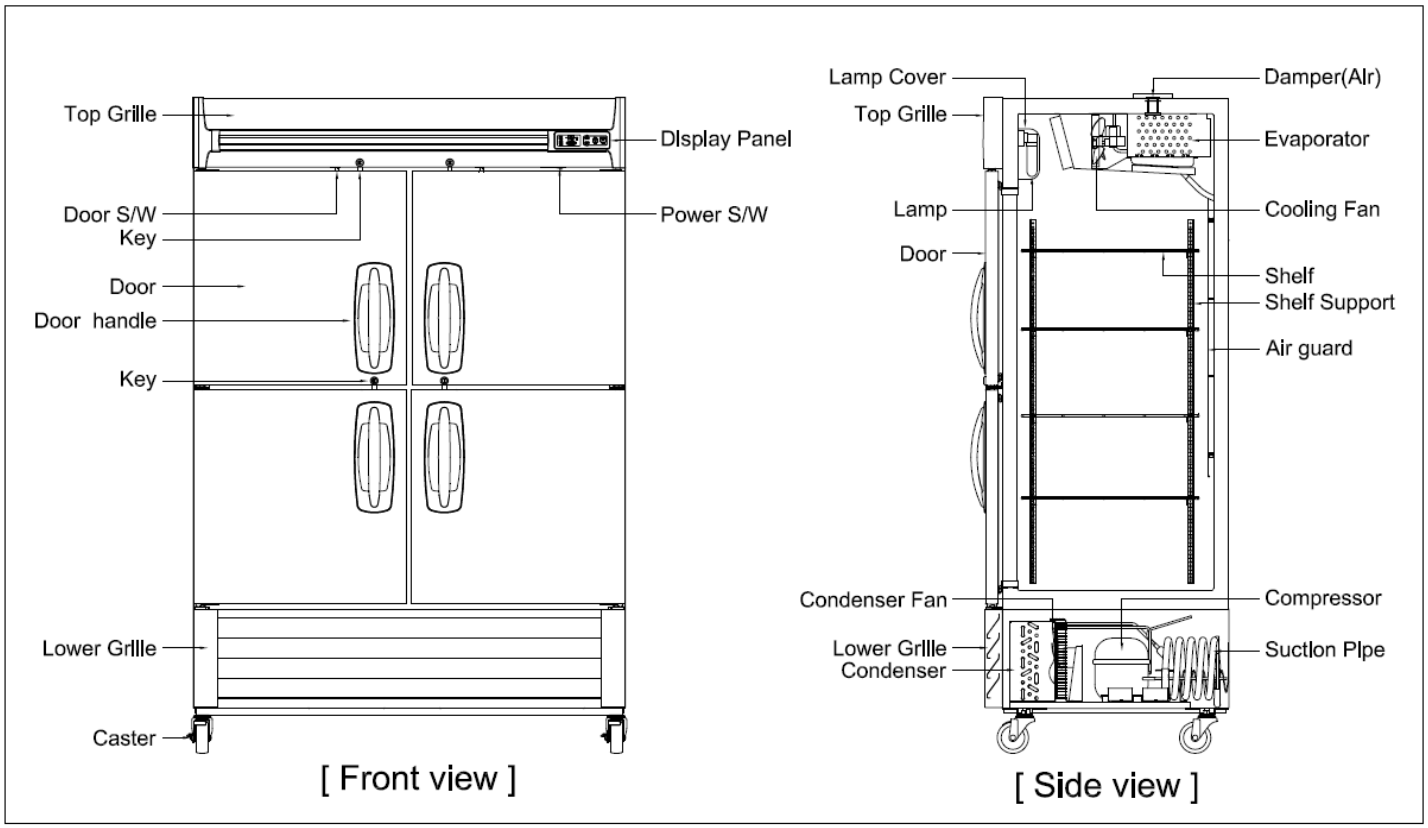

6) F72/R72-SH

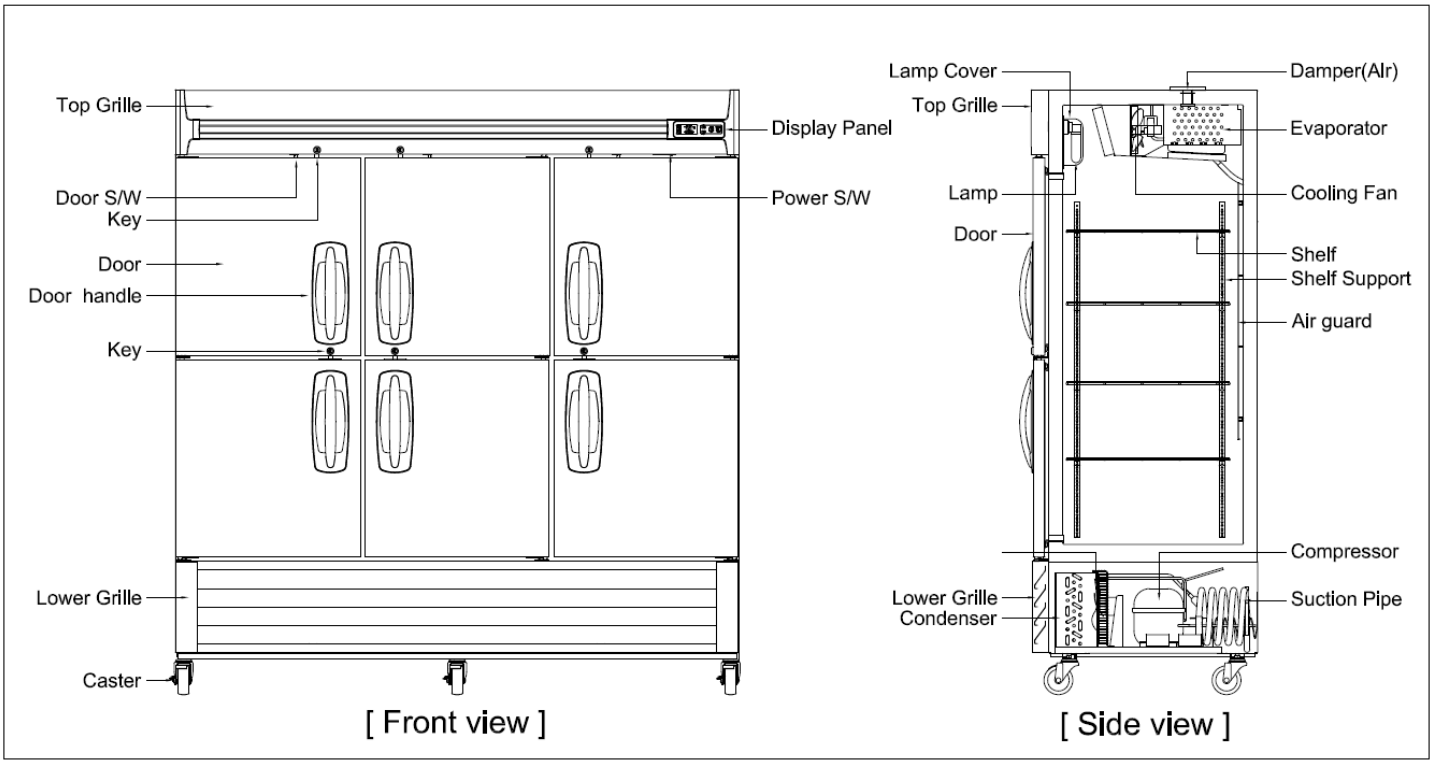

7) R23-G

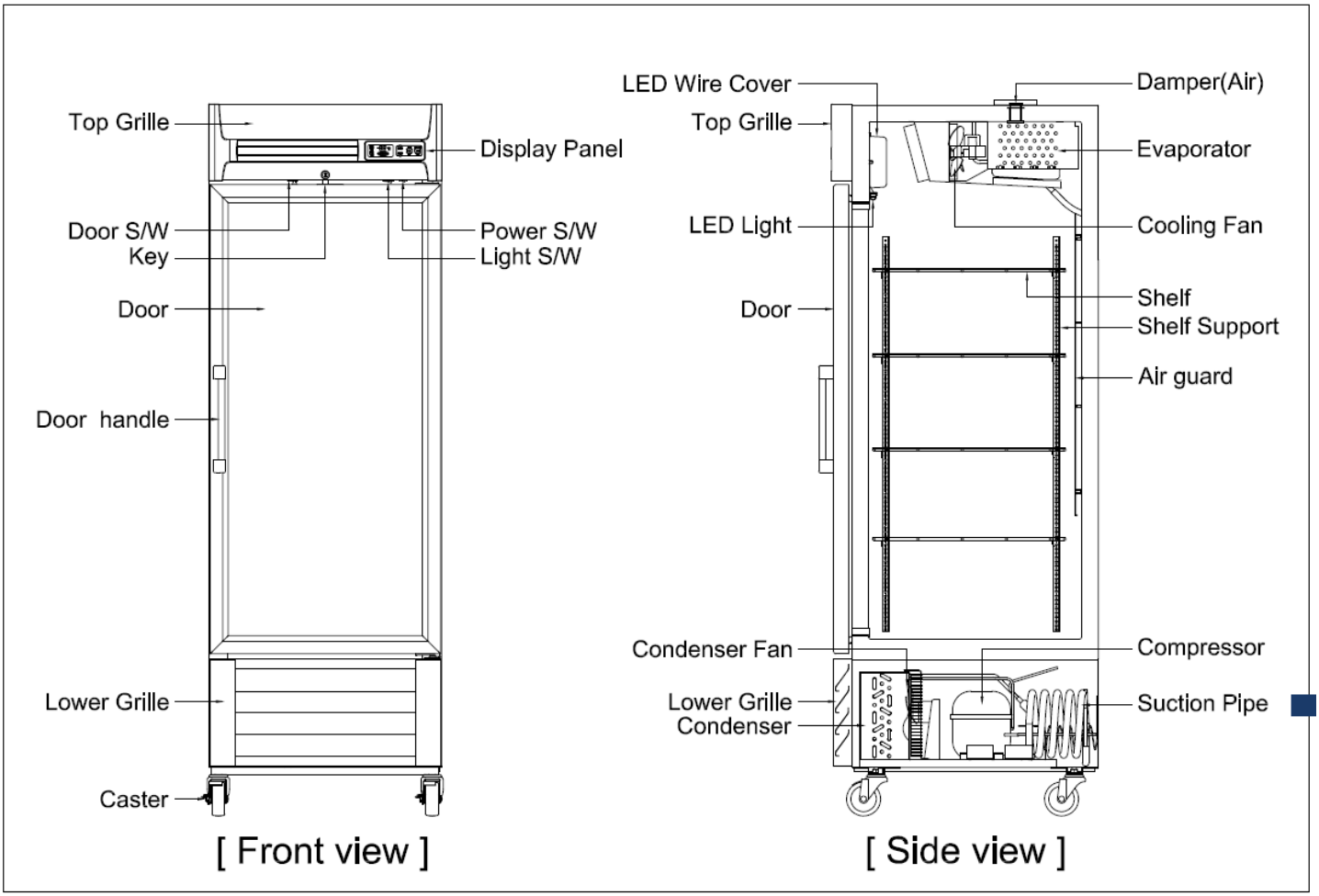
Top Grille
Display Panel
Door S/W
Key
Power S/W
Light S/W
Door
Door handle
Lower Grille
Caster
[Front view]
LED Wire Cover
Damper(Air)
Top Grille
Evaporator
LED Light
Cooling Fan
Door
Shelf
Shelf Support
Air guard
Condenser Fan
Compressor
Lower Grille
Condenser
Suction Pipe
[Side view]

8) R49-G

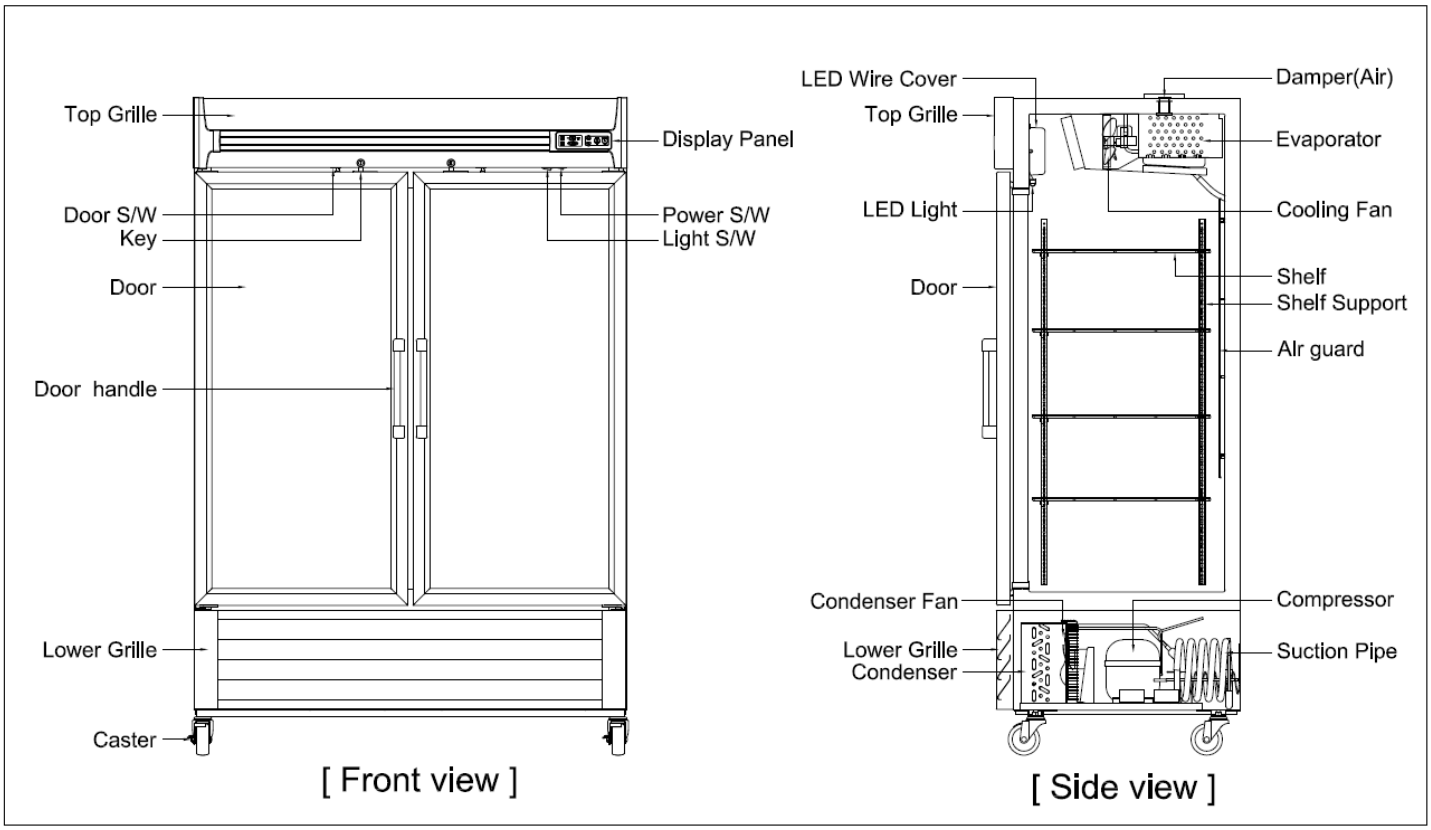
Top Grille
Display Panel
Door S/W
Key
Power S/W
Light S/W
Door
Door handle
Lower Grille
Caster
[Front view]
LED Wire Cover
Damper(Air)
Top Grille
Evaporator
LED Light
Cooling Fan
Door
Shelf
Shelf Support
Air guard
Condenser Fan
Compressor
Lower Grille
Condenser
Suction Pipe
[Side view]

9) R72-G

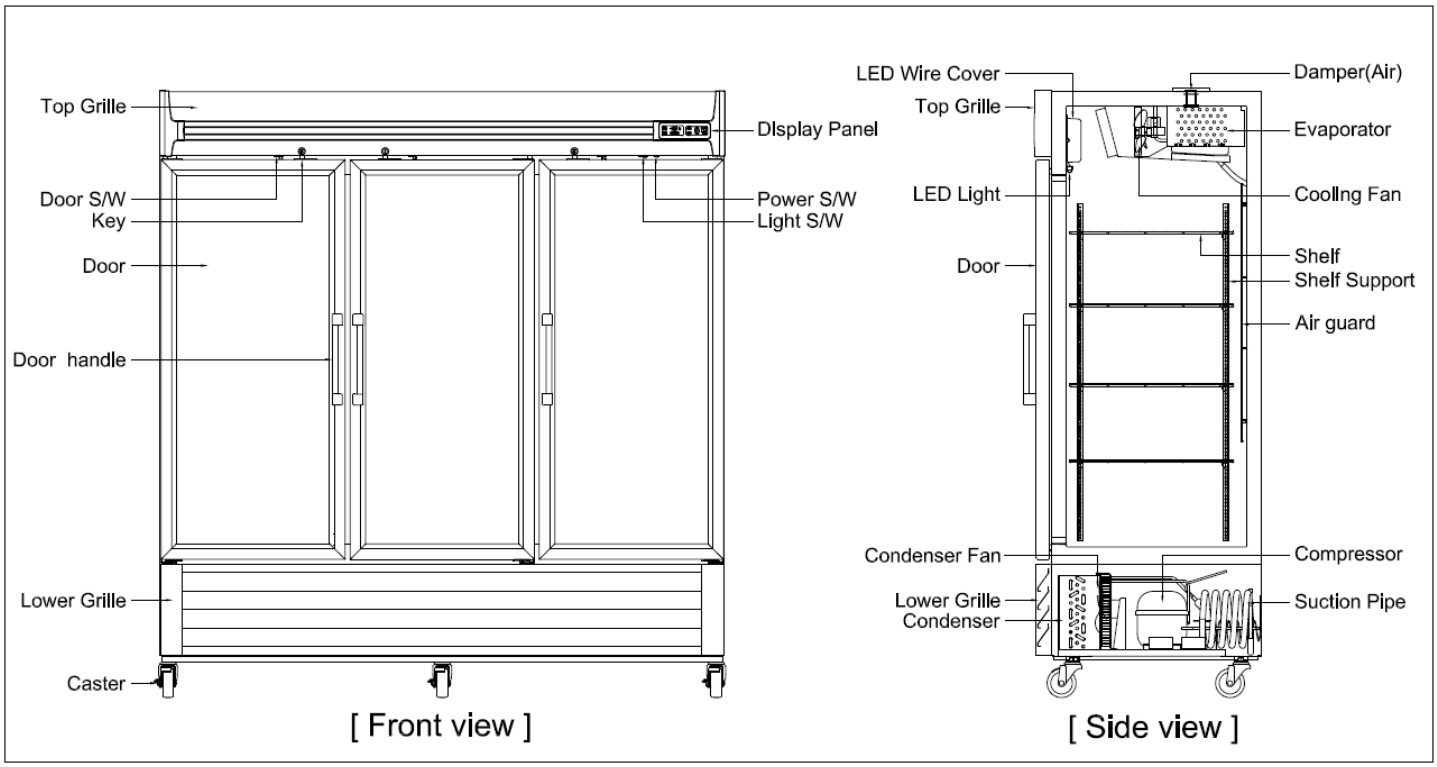

10) GR26H

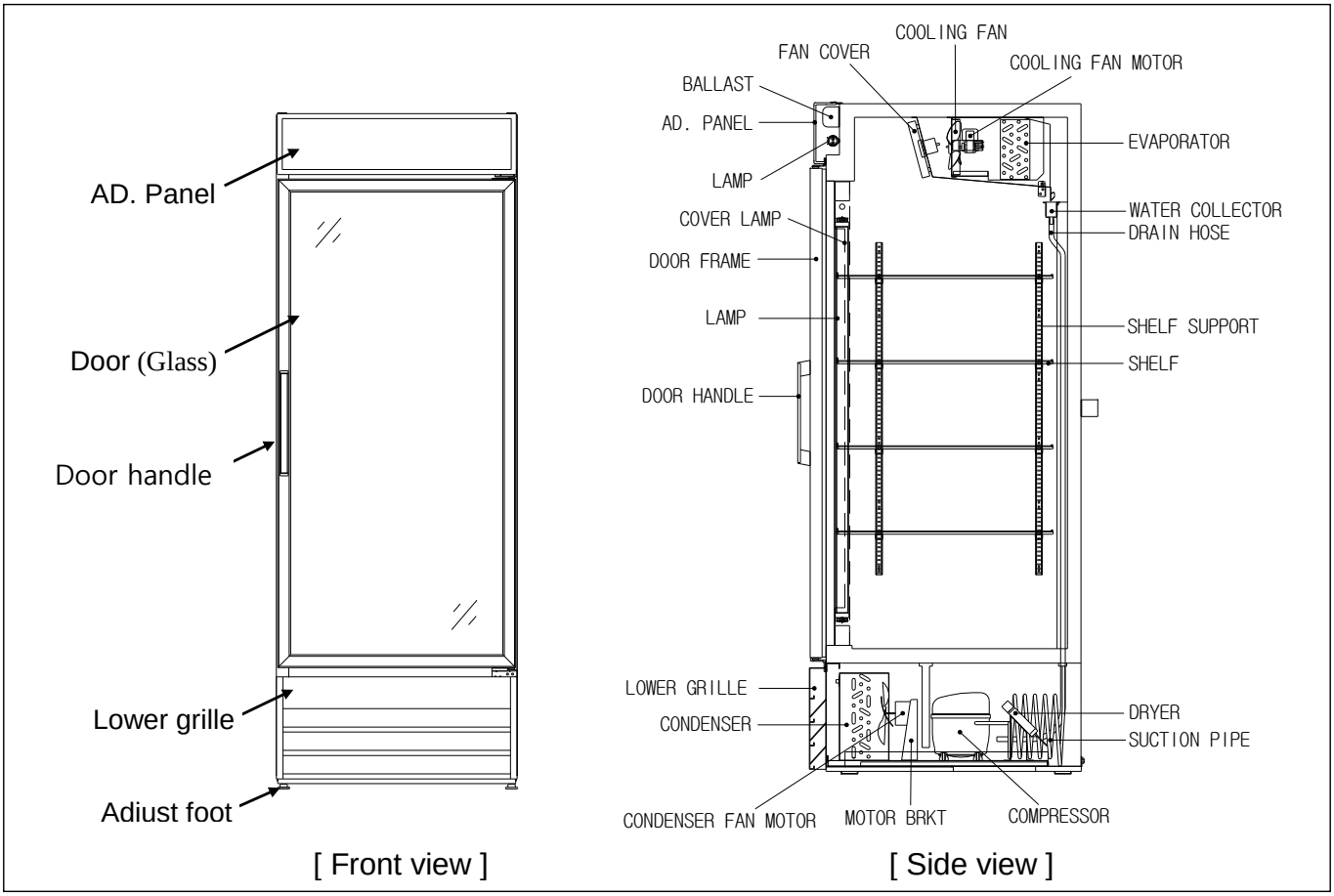

11) GR48S

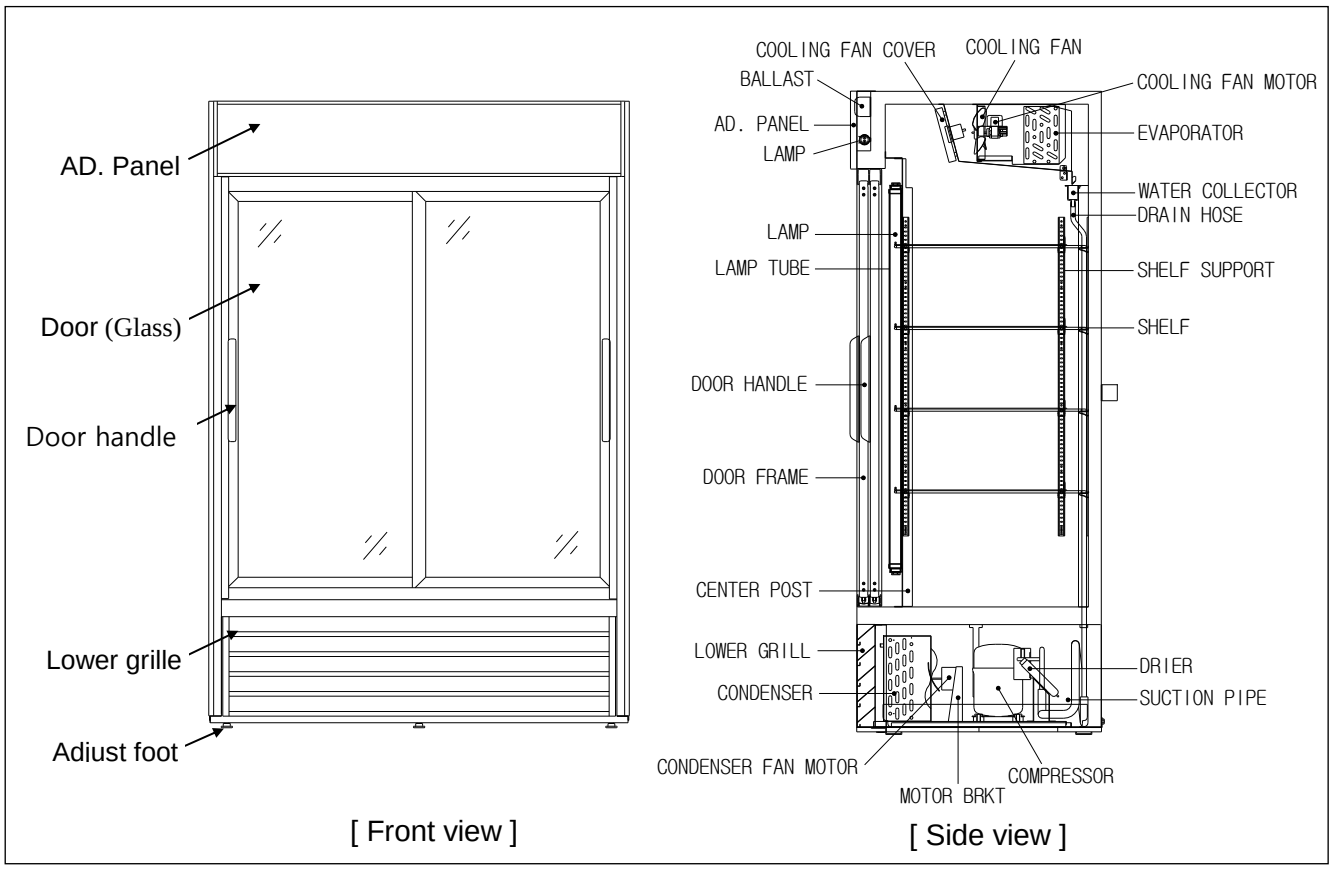

12) GR70H

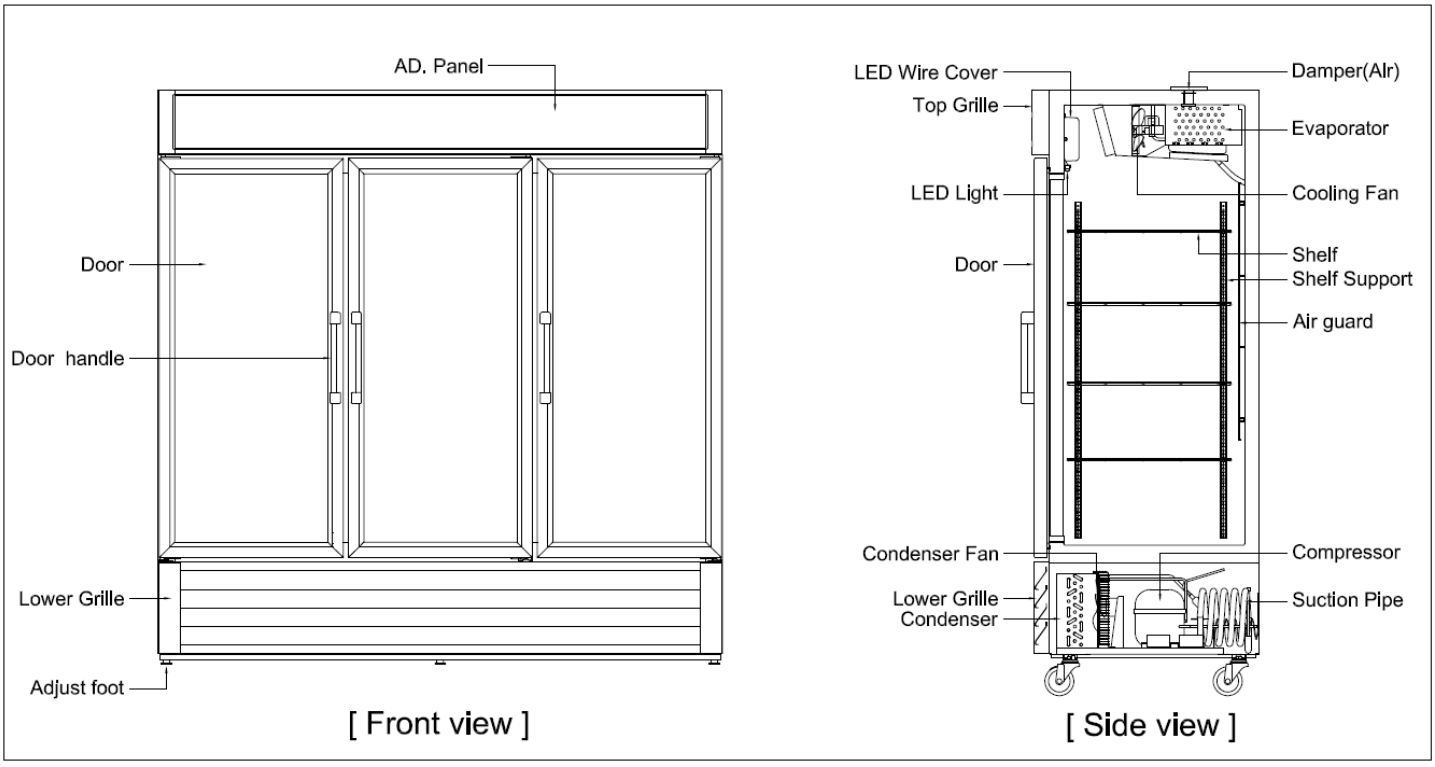

5. WIRING DIAGRAMS

1) F23-S

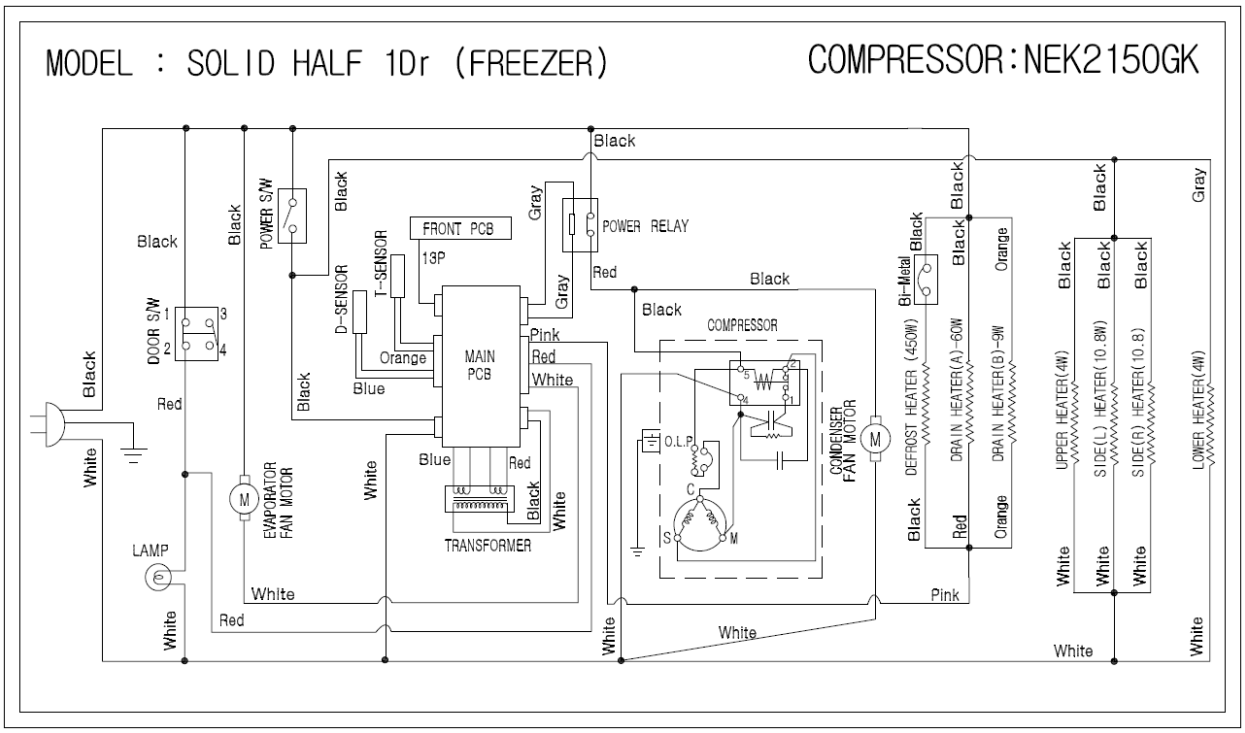

2) F49-S

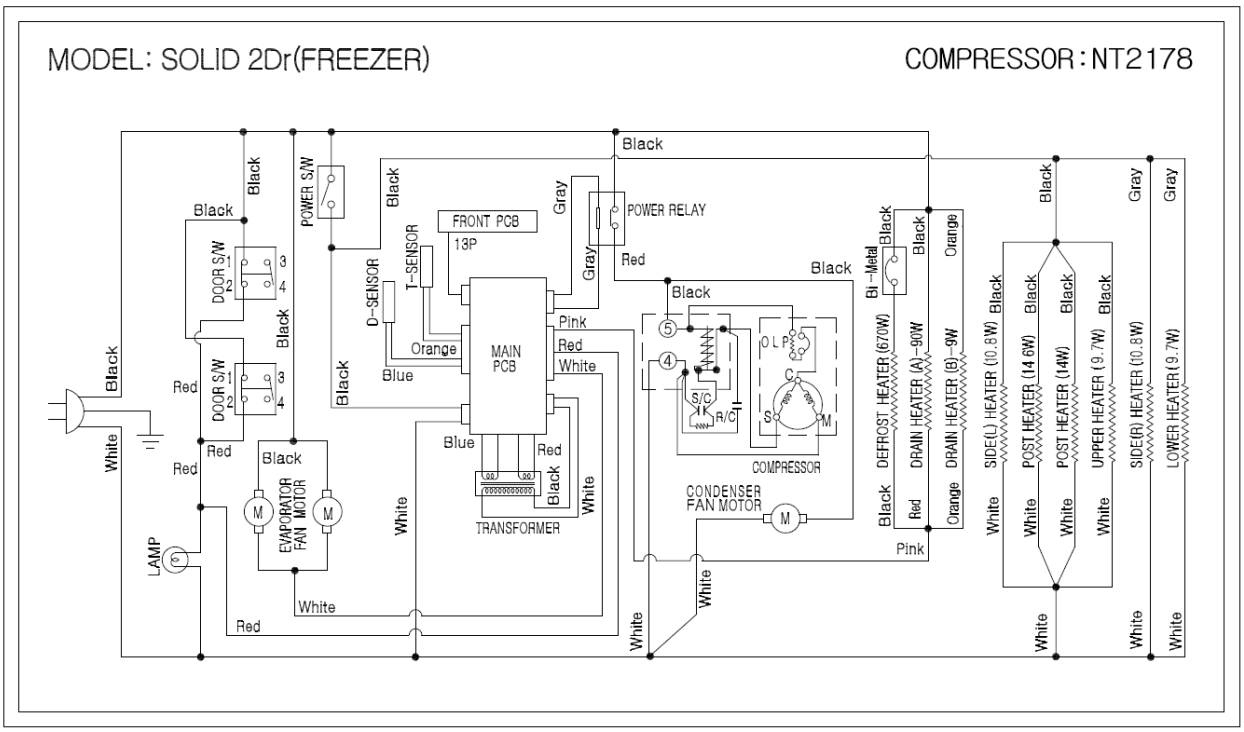

3) F72-S

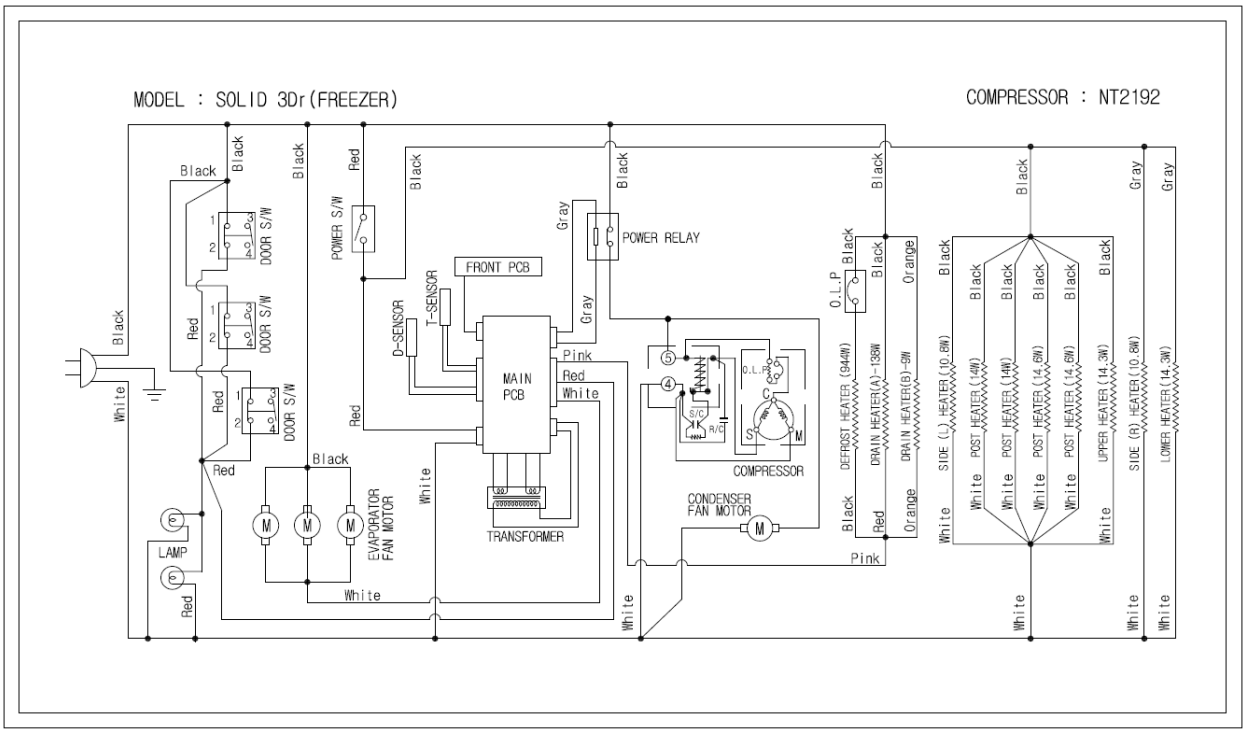
MODEL : SOLID 3Dr(FREEZER)
COMPRESSOR : NT2192
DOOR S/W
POWER S/W
FRONT PCB
POWER RELAY
D-SENSOR
T-SENSOR
MAIN PCB
TRANSFORMER
COMPRESSOR
CONDENSER FAN MOTOR
EVAPORATOR FAN MOTOR
LAMP
O.L.P
DEFROST HEATER (94W)
DRAIN HEATER(A)-13W
DRAIN HEATER(B)-9W
SIDE (L) HEATER(10.8W)
POST HEATER(14W)
POST HEATER(14.6W)
UPPER HEATER(14.3W)
SIDE (R) HEATER(10.8W)
LOWER HEATER(14.3W)

4) R23-S

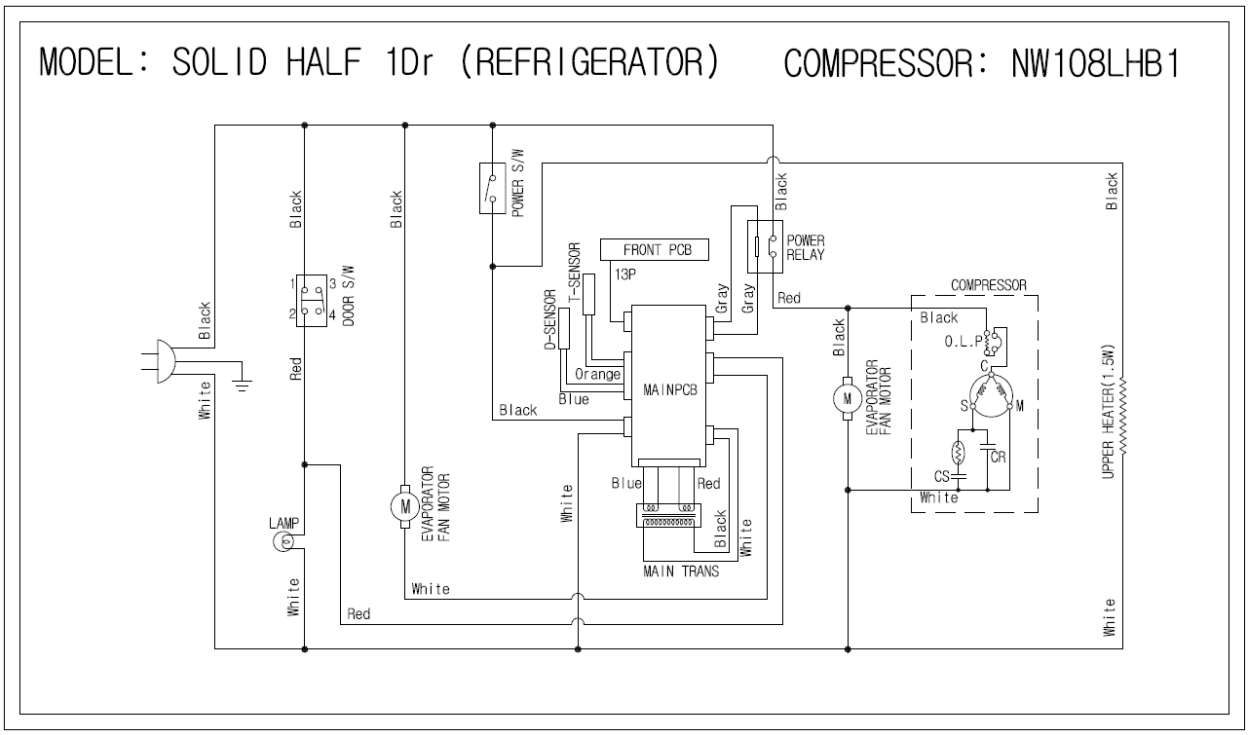
MODEL: SOLID HALF 1Dr (REFRIGERATOR) COMPRESSOR: NW108LHB1
DOOR S/W
POWER S/W
FRONT PCB
13P
POWER RELAY
D-SENSOR
T-SENSOR
MAINPCB
MAIN TRANS
COMPRESSOR
O.L.P
EVAPORATOR FAN MOTOR
LAMP
CR
CS
UPPER HEATER(1.5W)

5) R49-S

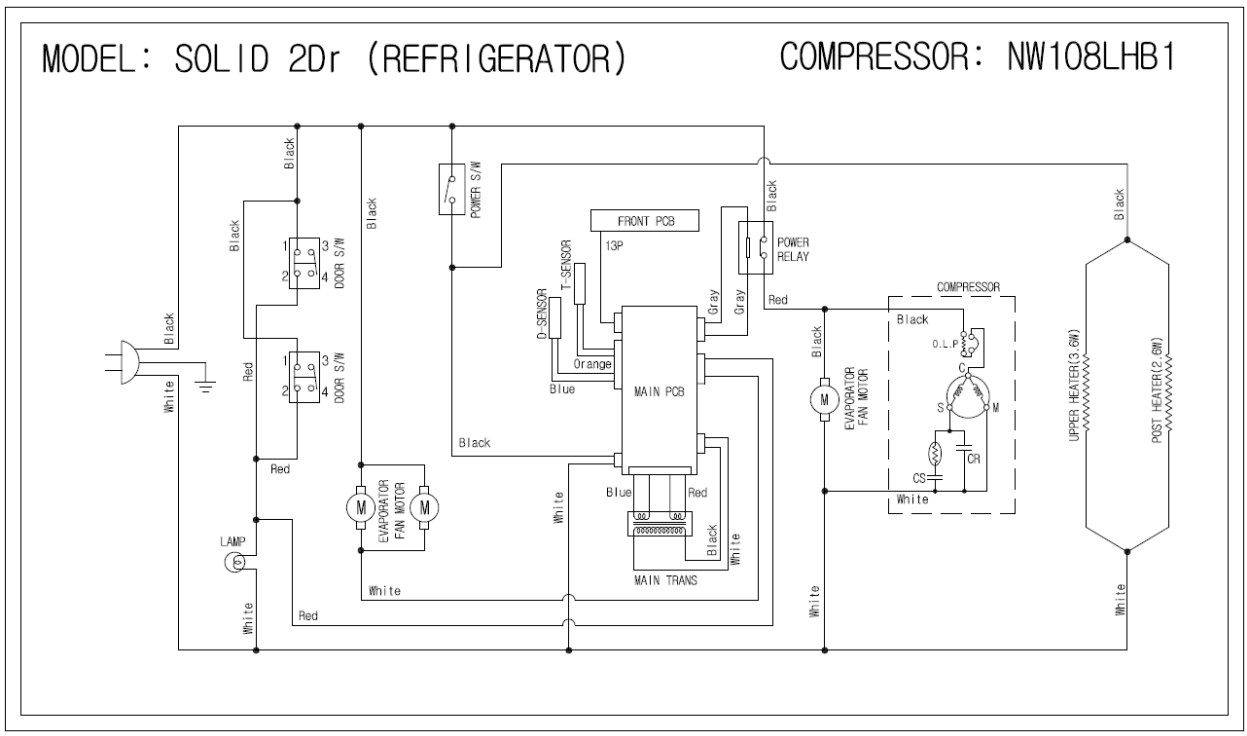
MODEL: SOLID 2Dr (REFRIGERATOR)
COMPRESSOR: NW108LHB1
Black
White
Red
Orange
Blue
Gray
DOOR S/W
POWER S/W
FRONT PCB
13P
T-SENSOR
D-SENSOR
MAIN PCB
POWER RELAY
COMPRESSOR
O.L.P
S
M
C
R
CS
EVAPORATOR FAN MOTOR
LAMP
MAIN TRANS
UPPER HEATER(3.6W)
POST HEATER(2.6W)

6) R72-S

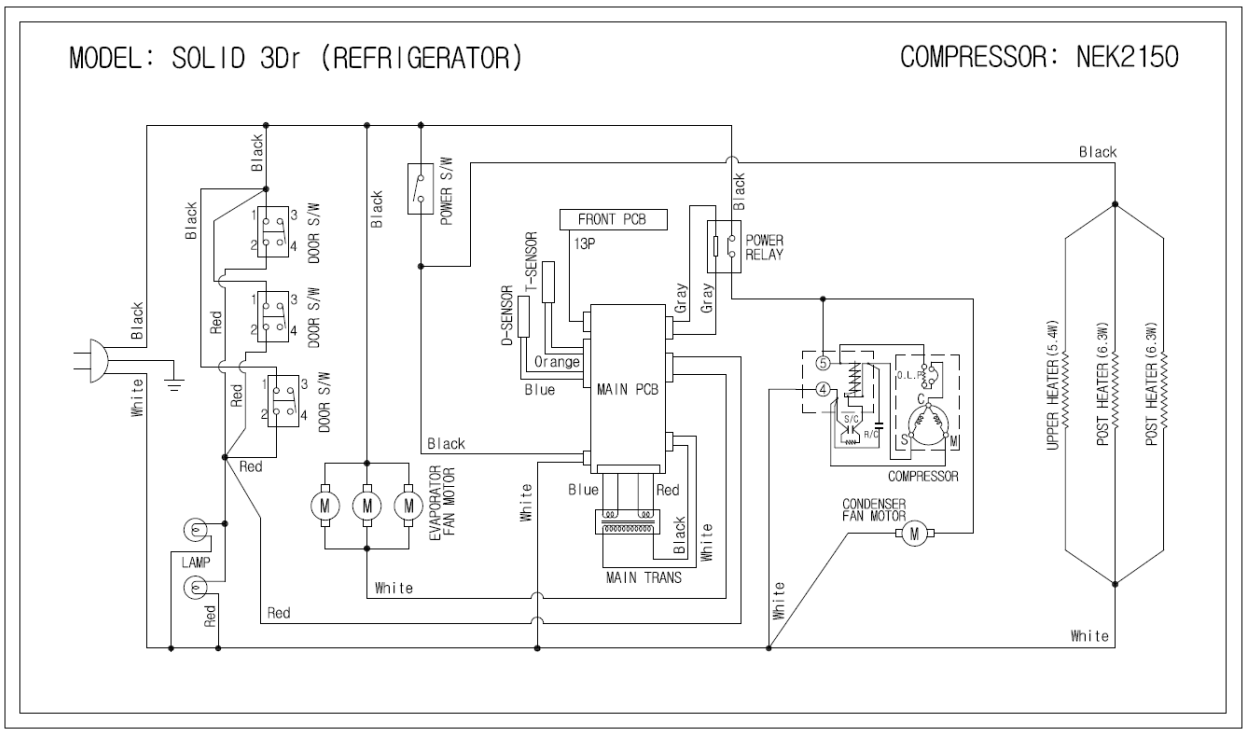
MODEL: SOLID 3Dr (REFRIGERATOR)
COMPRESSOR: NEK2150
Black
White
Red
Orange
Blue
Gray
DOOR S/W
POWER S/W
FRONT PCB
13P
T-SENSOR
D-SENSOR
MAIN PCB
POWER RELAY
COMPRESSOR
O.L.P
S
M
C
R
S/C
R/C
CONDENSER FAN MOTOR
EVAPORATOR FAN MOTOR
LAMP
MAIN TRANS
UPPER HEATER(5.4W)
POST HEATER(6.3W)
POST HEATER(6.3W)

7) R23-SH

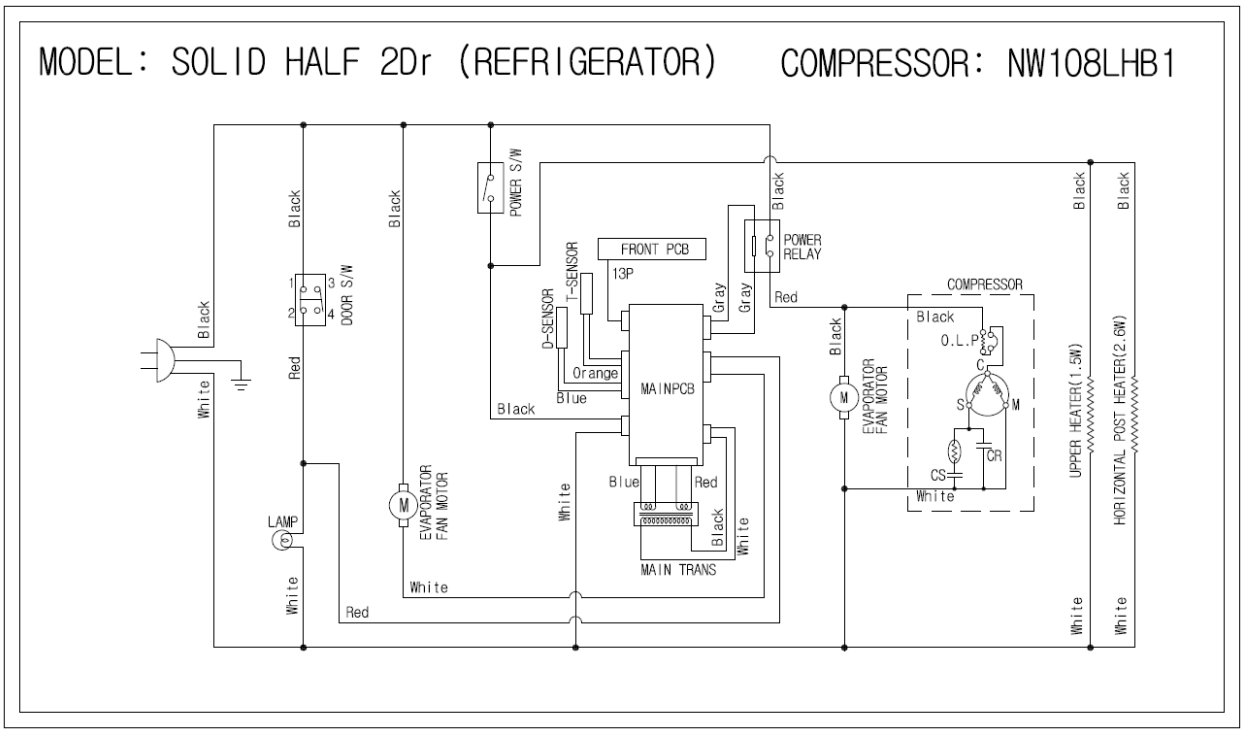

8) R49-SH

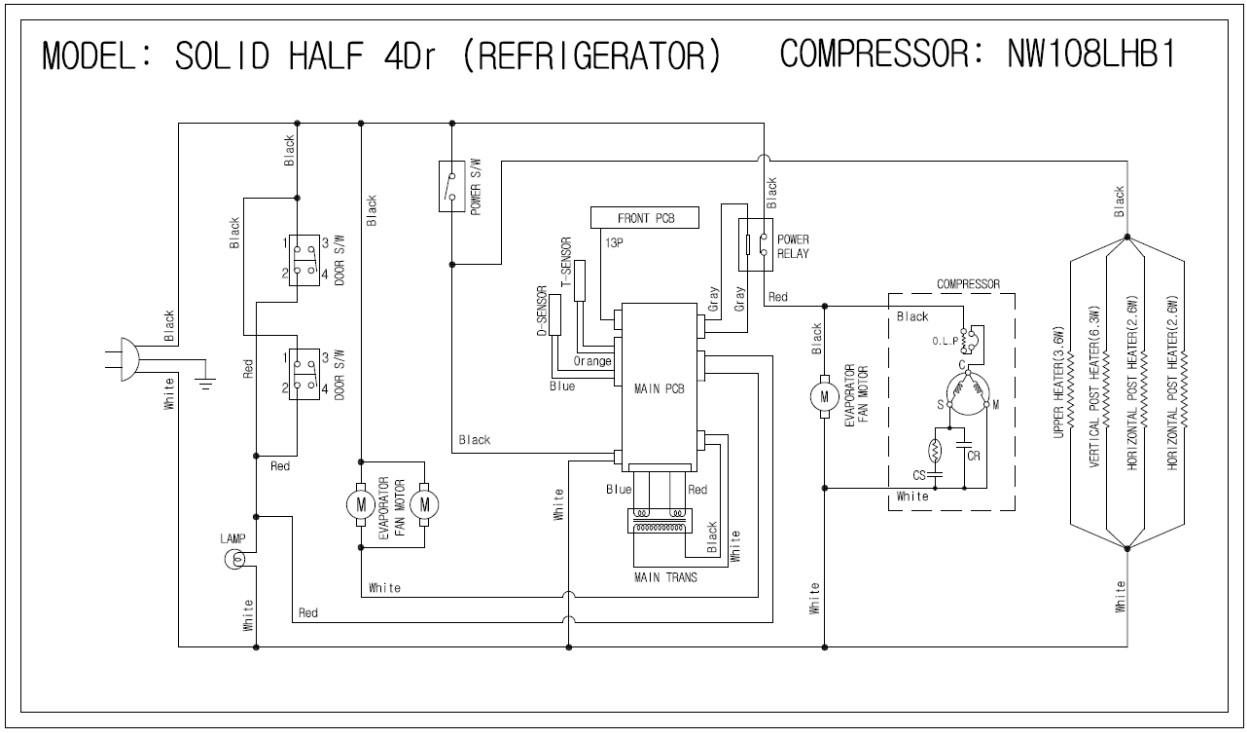

9) R72-SH

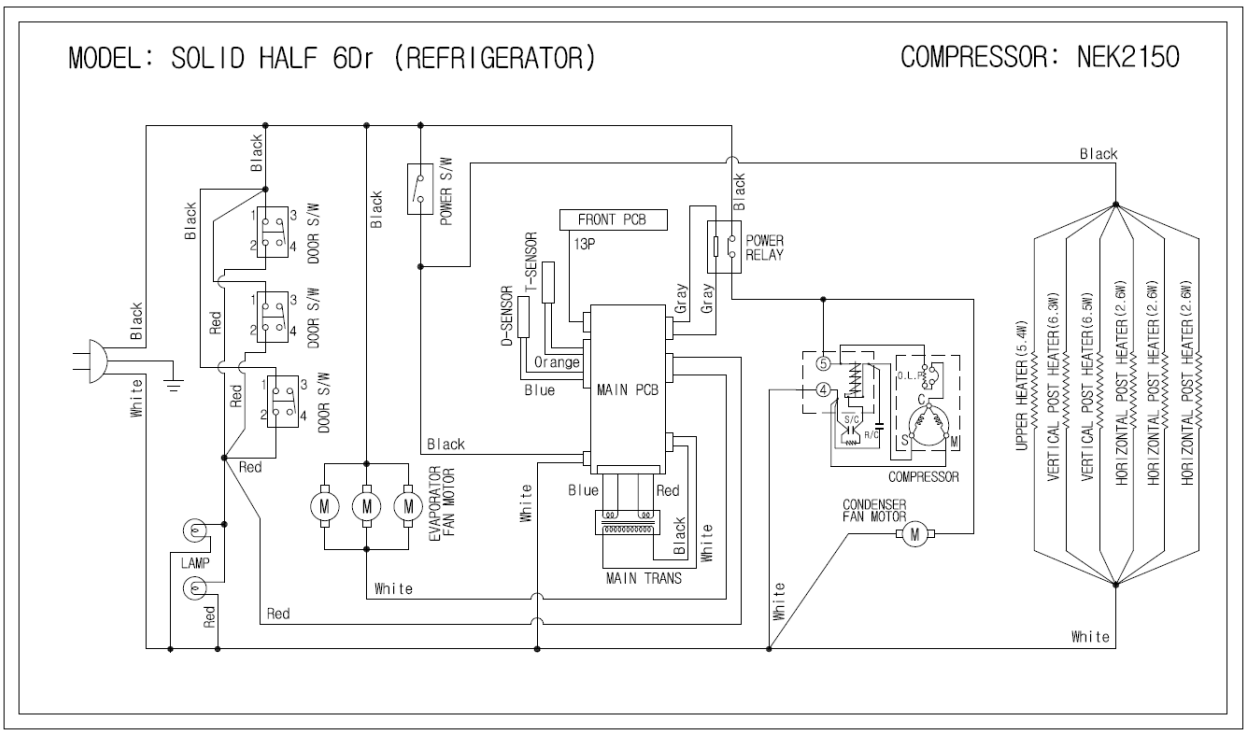

10) F23-SH

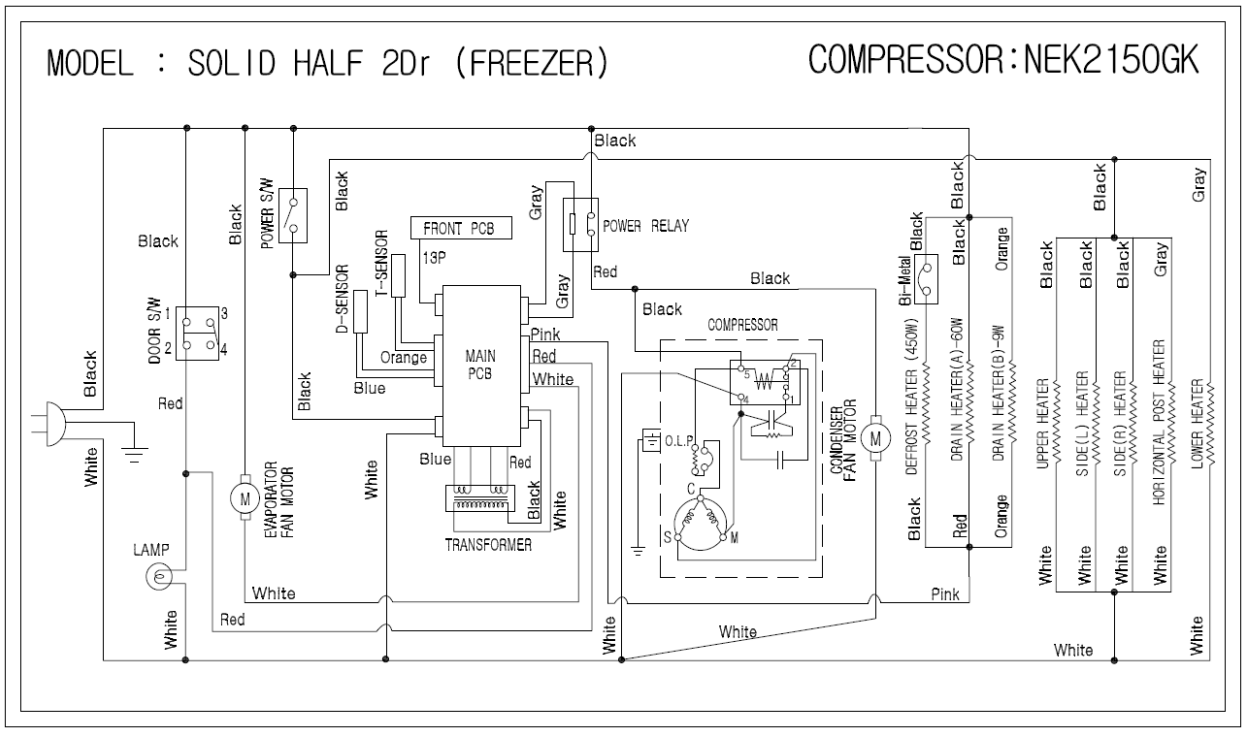

11) F49-SH

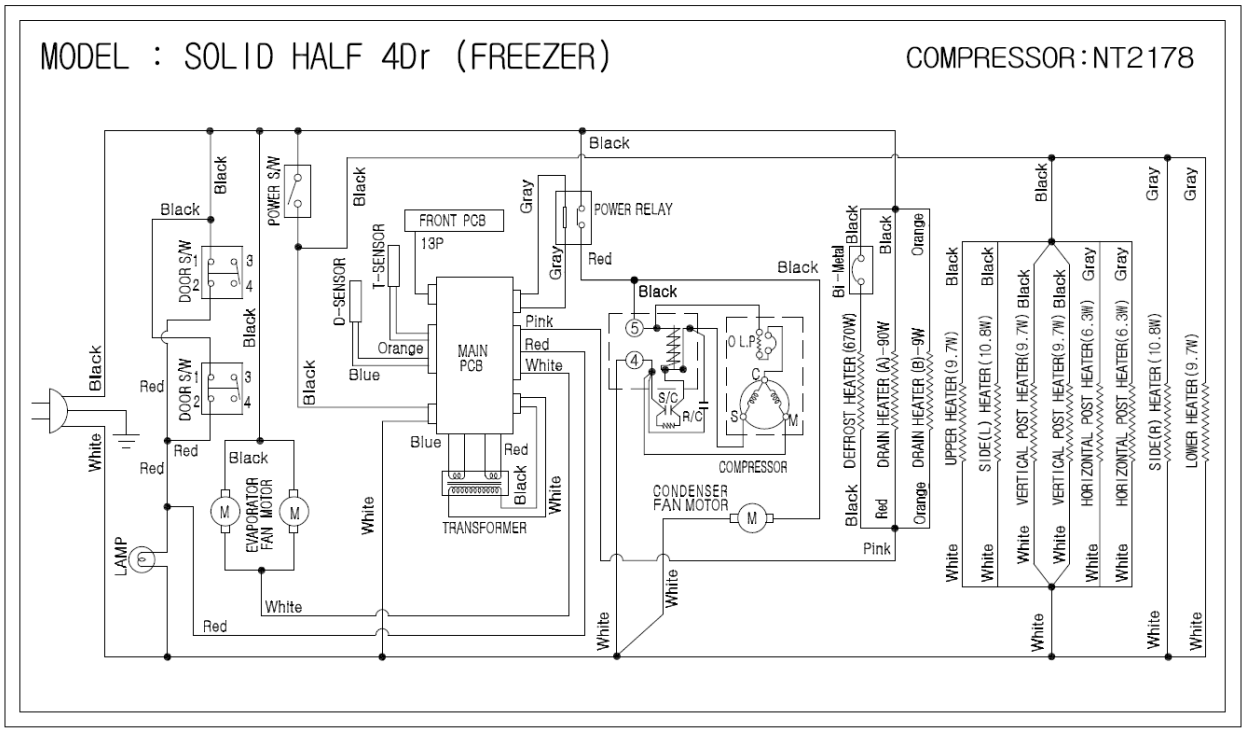

12) F72-SH

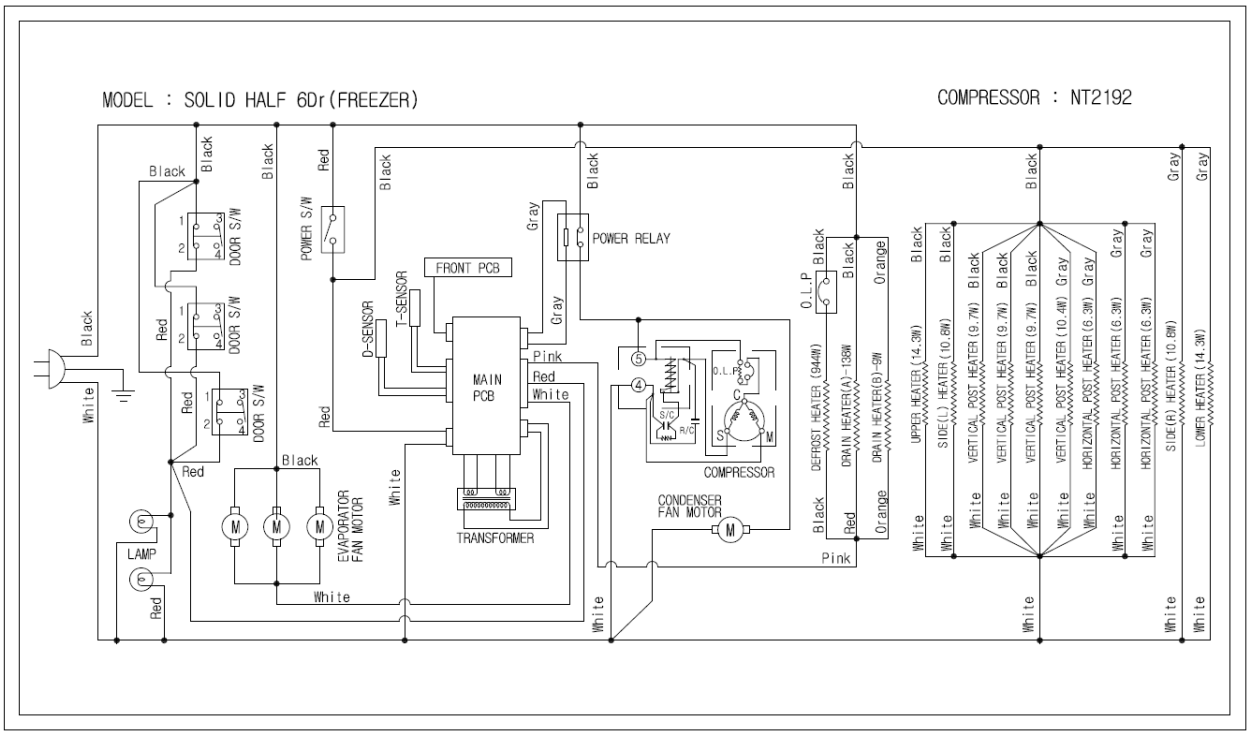

13) R23-G

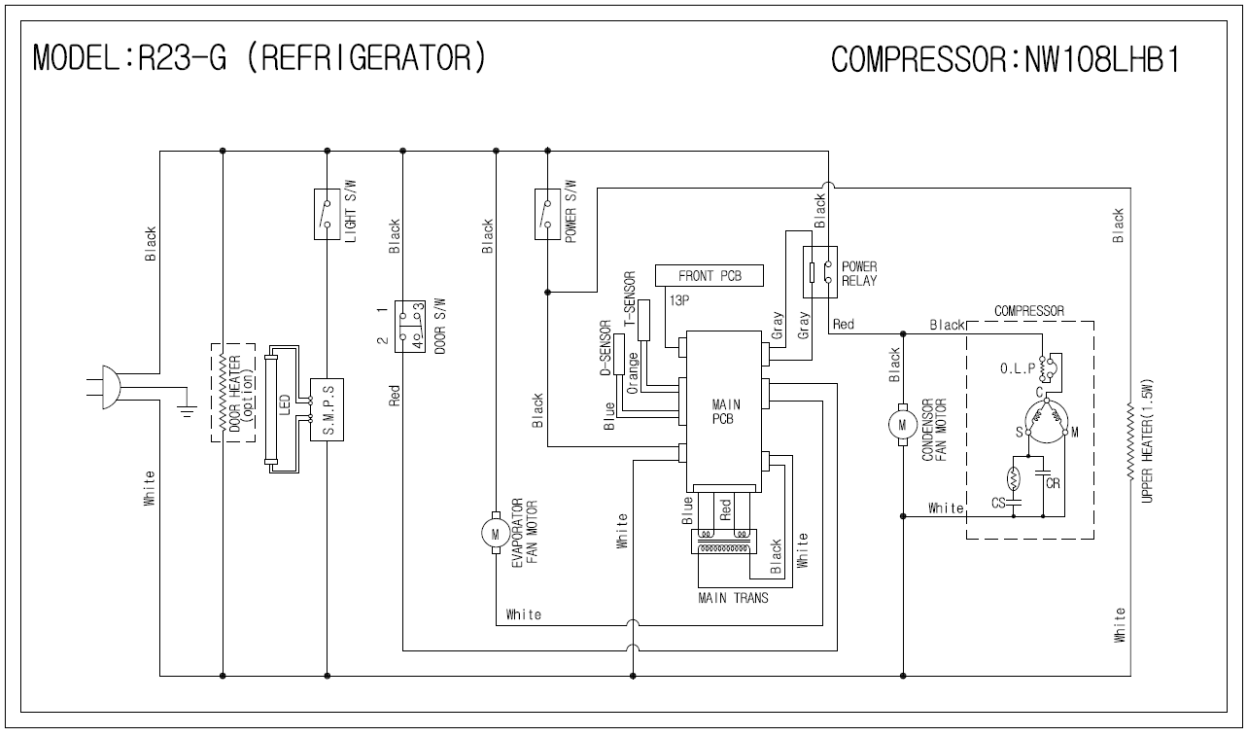

6) R49-G

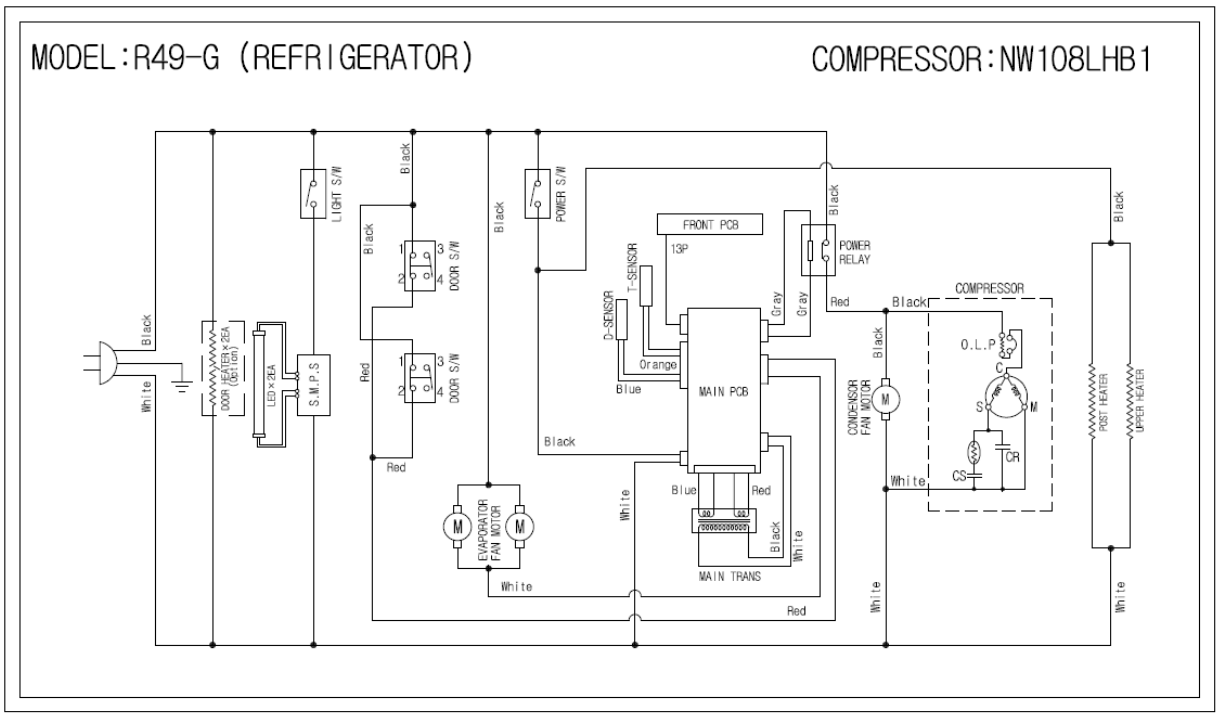

6) R72-G

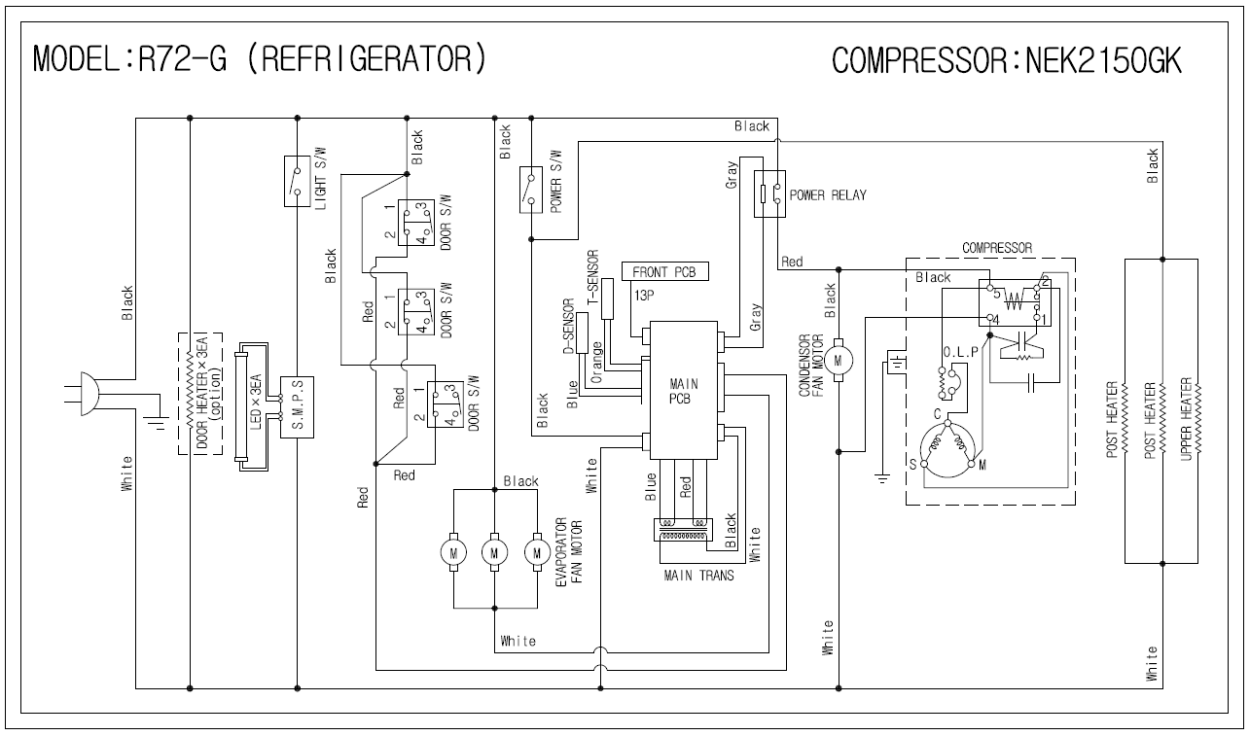

7) GR26H

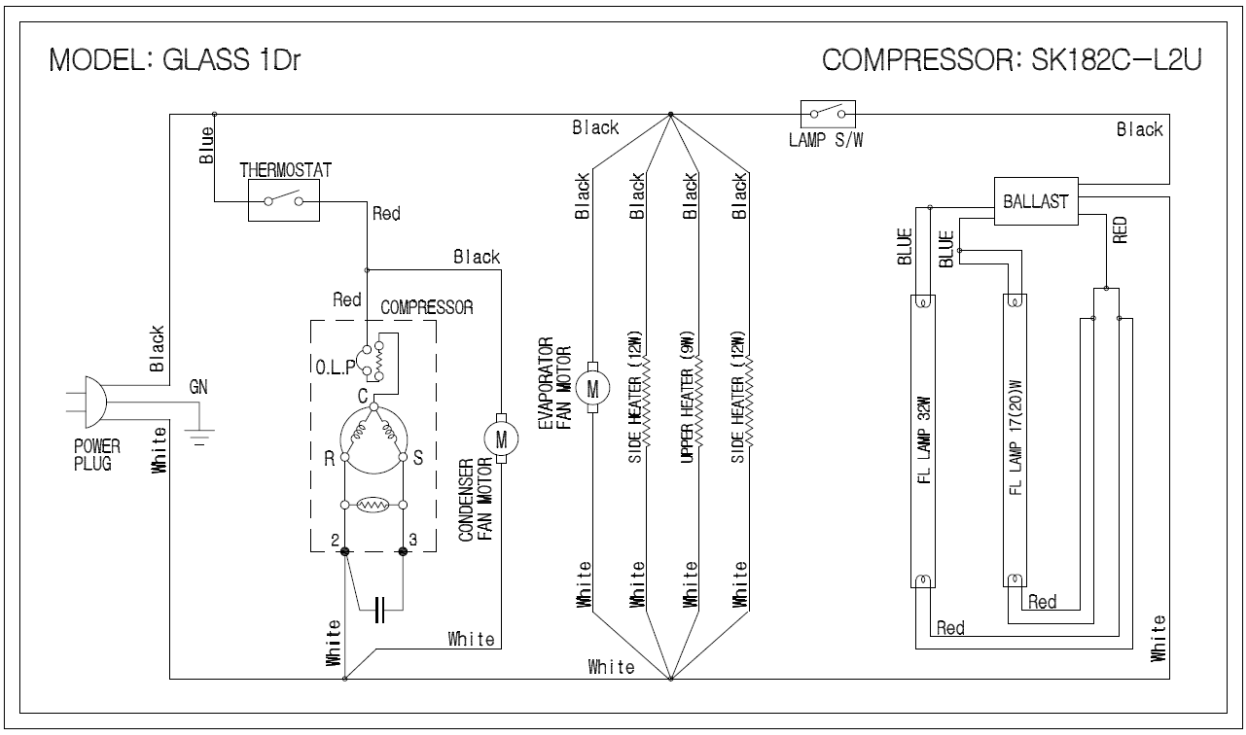

8) GR48S

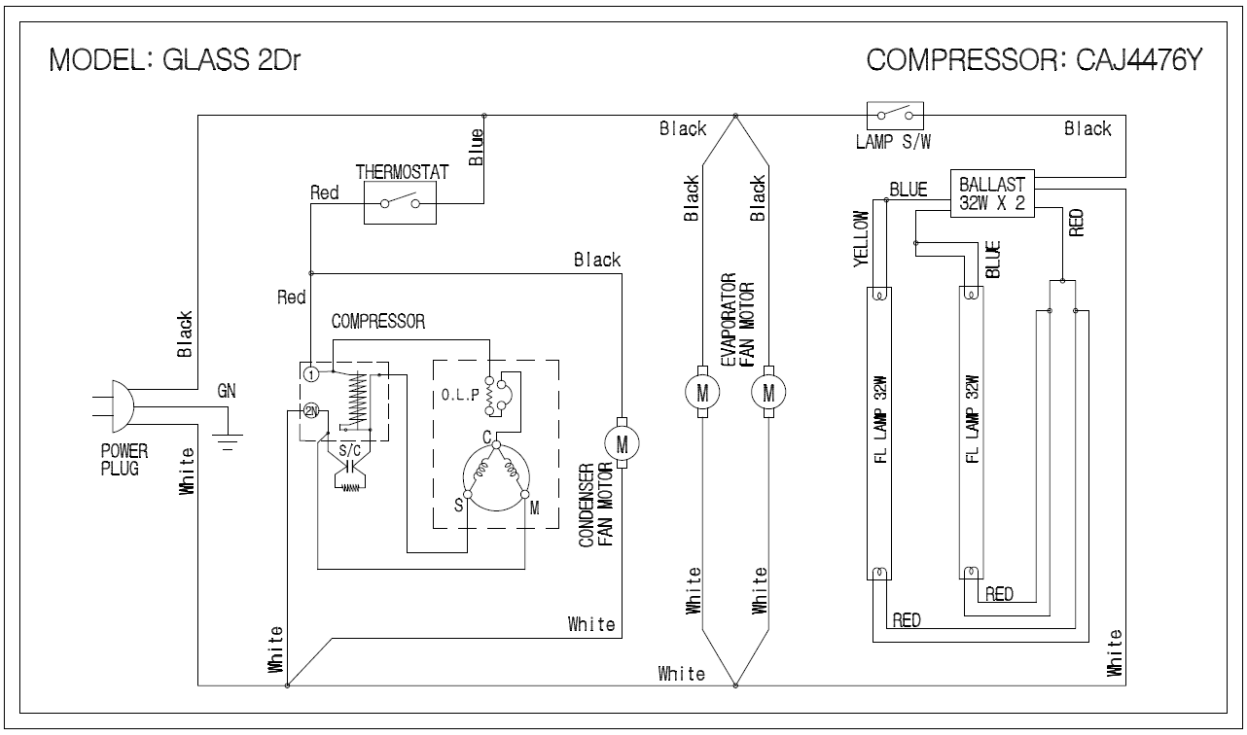

9) GR70H

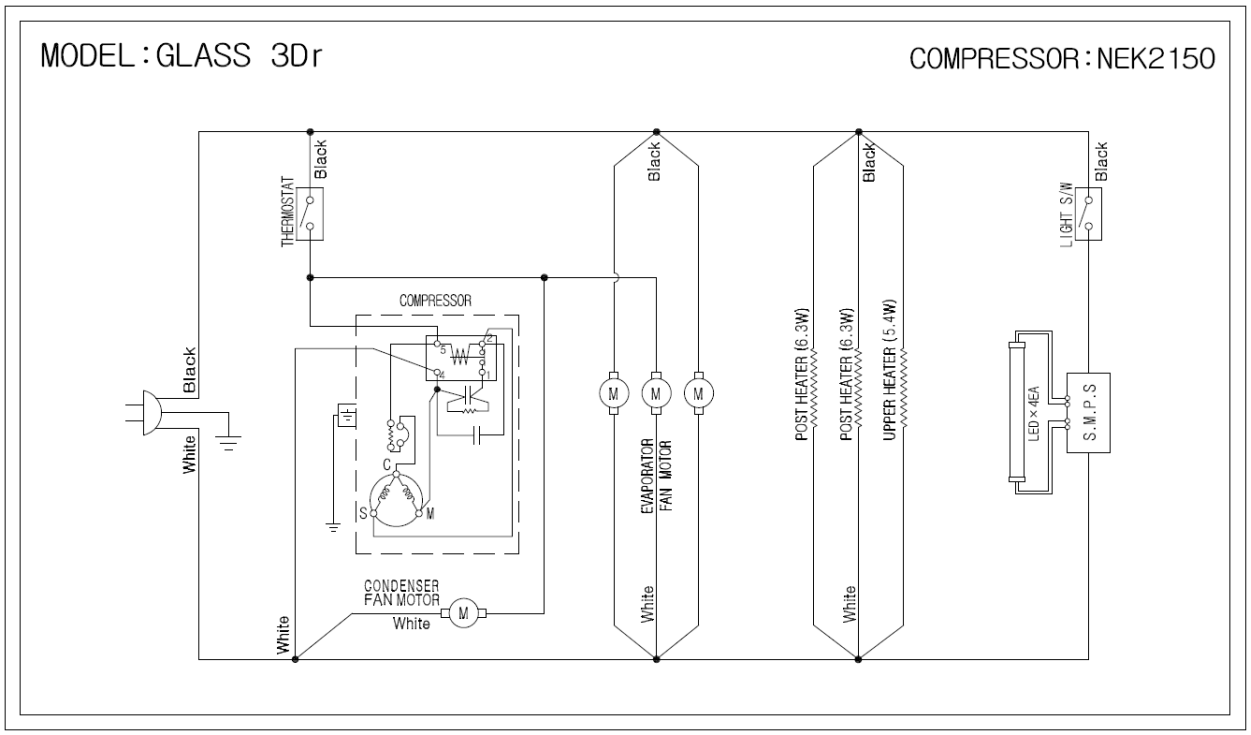

6. REPLACEMENT OF COMPONENTS

1) CONDENSING UNIT

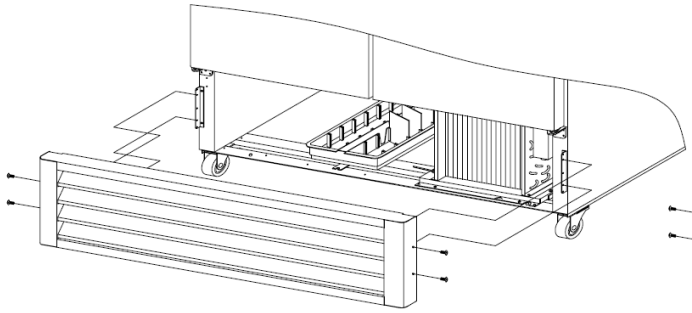

(F49/F72/R49/R72/GR70H)

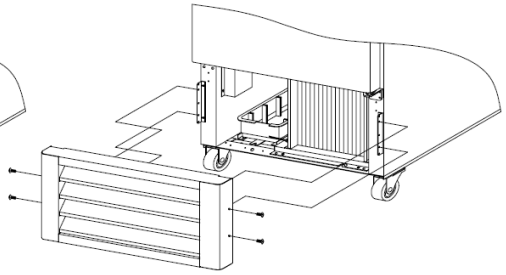

(F23/R23/GR26H)

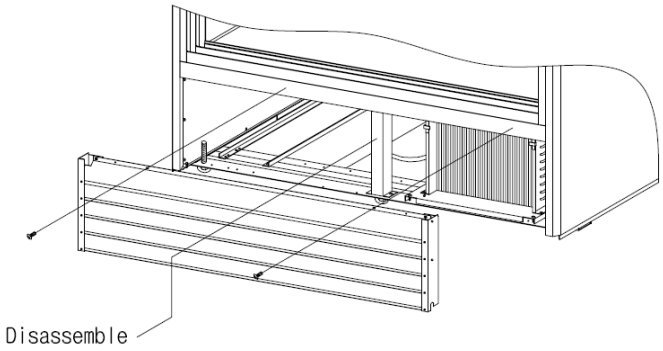

(GR48S)

a) Unplug the power cord before service.
b) Remove screw securing the lower grille.
* Remove screw securing the reinforce angle.(GR48S)

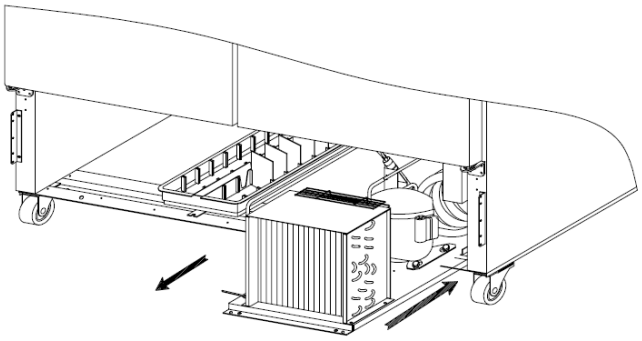

(F49/F72/R49/R72/GR70H)

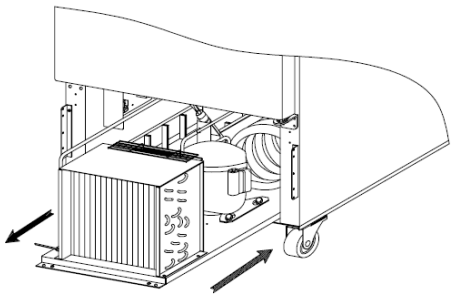

(F23/R23/GR26H)

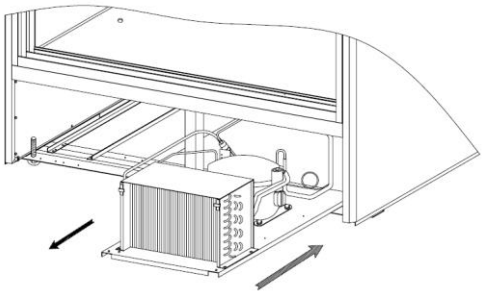

(GR48S)

a) Separate the compressor harness out of the terminal block.
b) Remove screws securing the unit base plate and pull out condensing unit with care.
c) Replace the necessary com-ponent.

※ CAUTION

1. Please pull out or push in the unit base plate carefully to prevent capillary tube, pipes and wires from damaging.
2. It is recommend to arrange wires after you push in the unit base plate.

2-1) LAMP (GR26H)

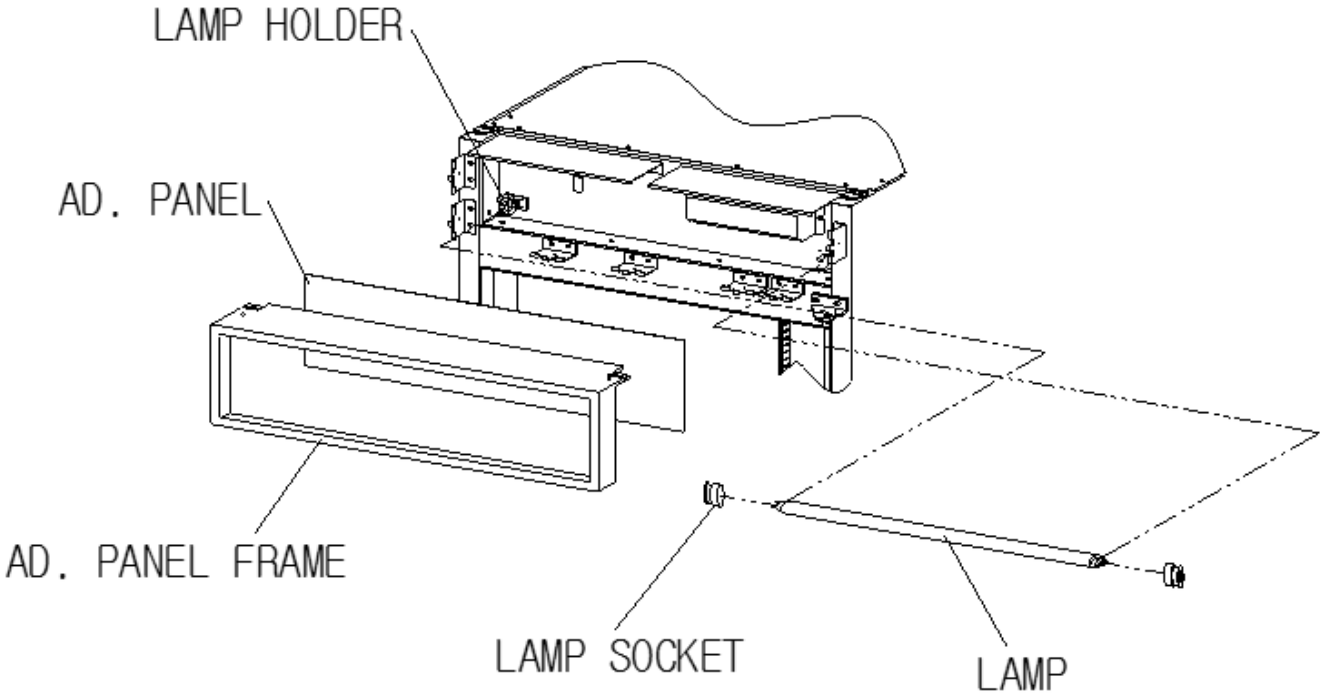

a) Unplug the power cord before service.

b) Remove screw securing the Ad. Panel Frame and pull out the Ad. Panel Frame with care.

c) Separate the Ad. Panel.

d) Separate the Lamp from the Lamp Holder.

e) Separate the Lamp Socket and replace the Lamp with care.

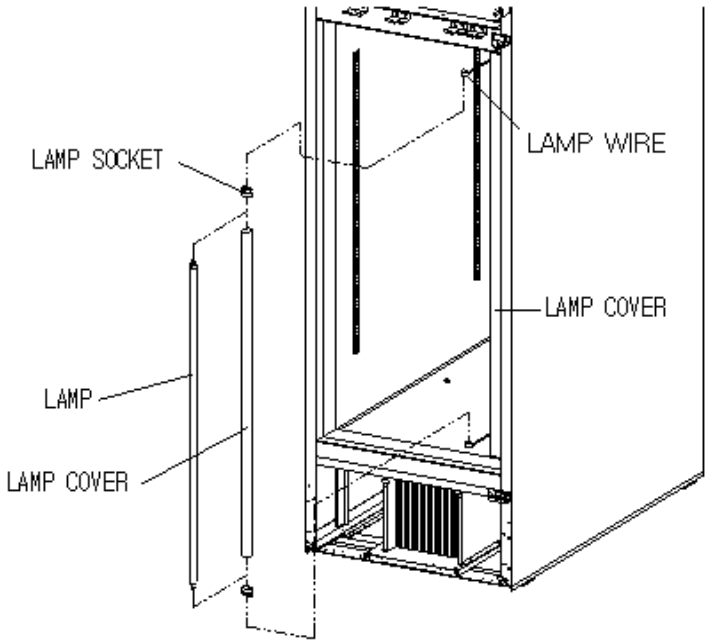

a) Unplug the power cord before service.

b) Separate the Lamp from the Lamp Holder.

c) Separate the Lamp Socket and the Lamp wire.

d) Replace the Lamp with care.

♠ Lamp Description: AC115V, F17T8/TL950

2-2) LAMP (GR48S)

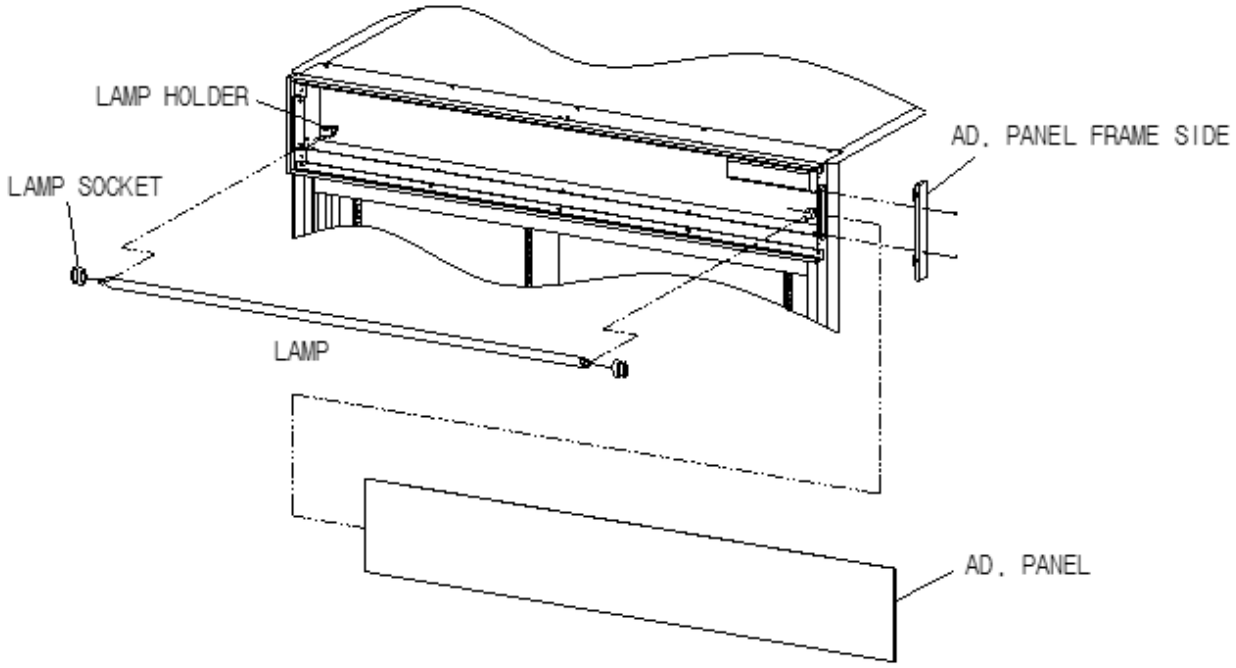

a) Unplug the power cord before service.

b) Remove screw securing the Ad. Panel Side.

c) Separate the Ad. Panel.

d) Separate the Lamp from the Lamp Holder.

e) Separate the Lamp Socket and replace the Lamp with care.

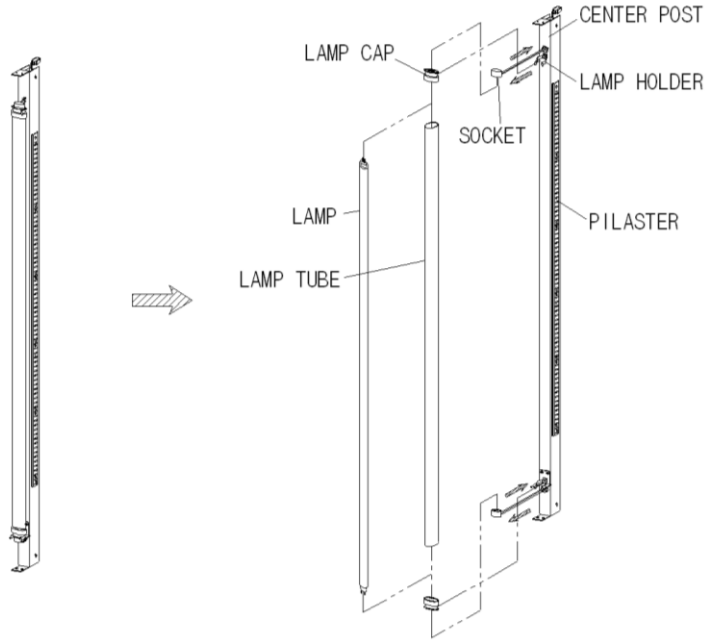

a) Unplug the power cord before service.

b) Separate the Lamp from the Lamp Holder.

c) Separate the Lamp Socket and the Lamp wire.

d) Replace the Lamp with care

.

♠ Lamp Description: AC115V, FHF32SSEX-D-5

B. OPERATION AND ELECTRONIC CONTROLLER FUNCTION

1. OPERATION FOR F23, F49, F72, R23, R49, R72 MODELS - - - - - B2

1) BASIC OPERATION

2) ELECTRONIC CONTROLLER SETTING MODE

3) NORMAL CONTROL PROCESS

4) ERROR CODE

2. OPERATION FOR GR26H, GR48S, GR70H MODELS - - - - - - - - - B12

1) BASIC OPERATION

2) DEFROST

3) CONTROL TEMPERATURE

4) LAMP

3. INSTRUCTION FOR RE-HINGING DOOR - - - - - - - - - - - - - - - - - B13

1. OPERATION FOR F23/F49/F72(FREEZER), R23/R49/R72(REFRIGERATOR)

1) BASIC OPERATION

① Plug in the power cord and turn on the power switch located on the bottom of the top grille right side.
[The unit should be plugged into a **115V±10%, 60Hz** (F23, F49, F72, R23, R49, R72 models)]

② Display panel will be lit for 2 seconds with buzzer then displays cabinet interior temperature (T-sensor) and running conditions.

* Freezer : If cabinet interior temperature is higher than 14˚F (-10℃) compressor will run without delay, and lower than 14˚F (-10℃), compressor will run after 3 minutes.
* Refrigerator : If cabinet interior temperature is higher than 50˚F (10℃) compressor will run without delay, and lower than 50˚F (10℃), compressor will run after 3 minutes.

③ The default OPERATING TEMPERATURE SETTING

* Freezer :Temperature set point (setting mode sign [St]) is –5˚F (-20℃)
  Temperature differential set point (setting mode sign [di]) is 8˚F (4℃)
  Range of adjustable set point: -22˚F~ 8˚F(-30℃ ~ -10℃)
* Refrigerator : Temperature set point (setting mode sign [St]) is 36˚F (4℃) in solid door refrigerator
  Temperature set point (setting mode sign [St]) is 35˚F (4℃) in glass door refrigerator
  Temperature differential set point (setting mode sign [di]) is 8˚F (4℃)
  Range of adjustable set point: 25˚F~ 50˚F (2℃ ~10℃)

④ Defrost frequency

* Freezer : It is controlled by MICOM and the default defrost frequency is 12 hours.
* Refrigerator : It is controlled by MICOM and the default defrost frequency is 12 hours.

⑤ The light inside the cabinet comes on when the door is opened in Solid Door models while light is always on in Glass Door models.
The cabinet interior cooling fan has 3 seconds delay when the door is closed.
When COMP. is OFF, EVA. fan repeats ON and OFF according to setting times
If door is opened , EVA. fan OFF and then closed the door, EVA. fan repeats ON and OFF according to setting times

⑥ If door is opened, door open warning sign (LED) will turn on.

If door is opened more than 30 seconds, the sound alarm beeps 3 times,
if open more than 60 seconds, the sound alarm beeps 5 times and if open more than 5 minutes,
the sound alarm will beep continuously.

⑦ Cabinet interior temperature

* Freezer : If it is higher than 14˚F (-5℃), the panel displays [Hi] and
lower than -50˚F (-40℃), the panel displays [Lo].

* Refrigerator : If it is higher than 68˚F (15℃), the panel displays [Hi] and
lower than 14˚F (-2℃), the panel displays [Lo].

2) ELECTRONIC CONTROLLER SETTING MODE

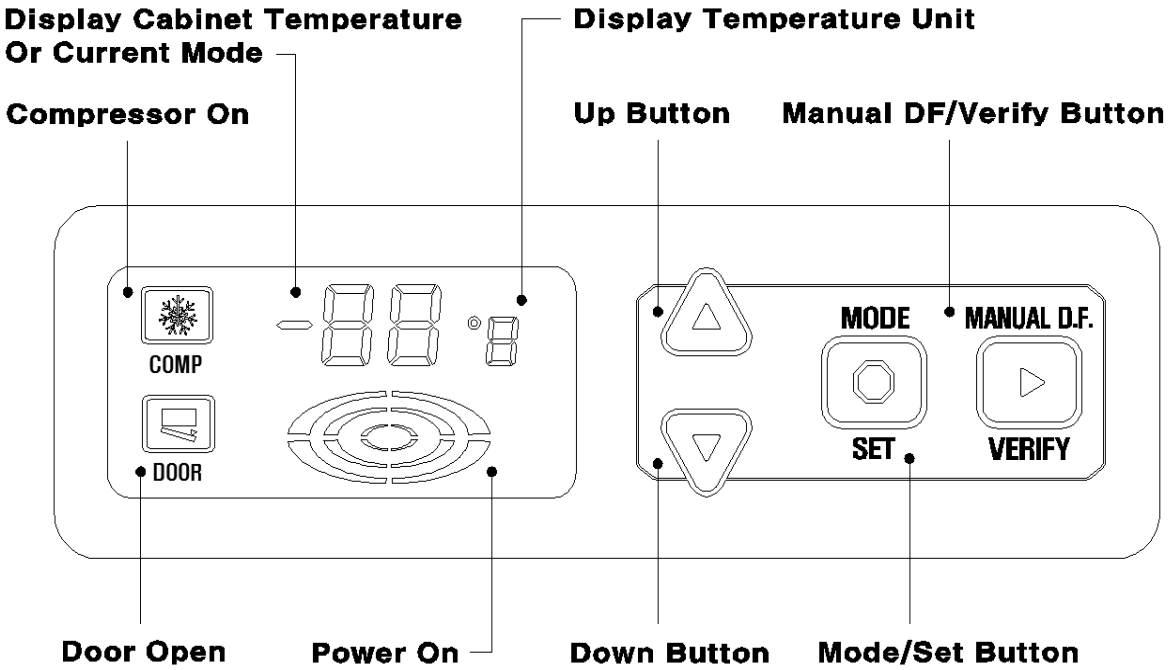

Display	Description
St	Temperature Setting Mode
di	Temperature Differential Setting Mode
th	Cabinet Temperature Verification Mode
dt	Defrost Frequency Setting Mode
tb	Rapid Freeze Mode (Freezer Only)
dF	Forced Defrost Mode
SE	Temperature Unit Converter mode(˚F↔℃)

※ In converting Temperature Unit (˚F↔℃), 1˚F (1℃) deviation can occur.

No	Setting Mode	Mode Sign	How to Setting
1	**Temperature Setting Mode**	**"St"**	1.To enter this mode, press **[MODE/SET]** and **[UP or DOWN]** simultaneously until **[St]** is displayed. 2. Then press **[MODE/SET]** to see current temperature set point. 3. To change the set point, press **[UP or DOWN]** until the desired value is displayed. 4. At the end of the sequence, press **[MODE/SET]** to set the value. 5. To display the cabinet temperature again, press **[UP or DOWN]** until **[th]** is displayed and then press **[VERIFY]**. 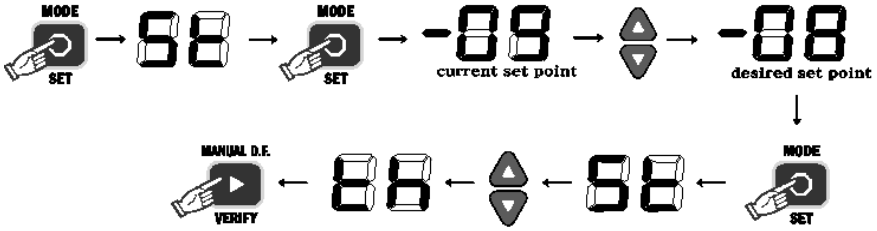 6. Range of adjustable set point : -22˚F~8˚F(-30℃~ -10℃) (Freezer) Range of adjustable set point : 25˚F~50˚F(2℃ ~ 10℃) (Refrigerator)
2	**Temperature Differential Setting Mode**	**"di"**	1. To enter this mode, press **[MODE/SET]** and **[UP or DOWN]** simultaneously until **[di]** is displayed. 2. Then press **[MODE/SET]** to see current temperature differential. 3. To change the set point, press **[UP or DOWN]** until the desired value is displayed. 4. At the end of the sequence, press **[MODE/SET]** to set the value. 5. To display the cabinet temperature again, press **[UP or DOWN]** until **[th]** is displayed and then press **[VERIFY]**. 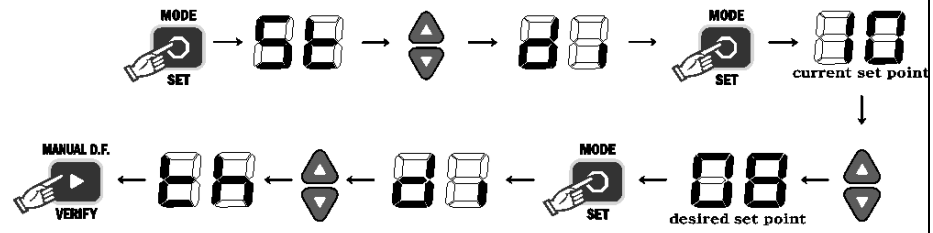 6. Range of adjustable set point : **4˚F~16˚F(2℃~10℃)** (Freezer) Range of adjustable set point : **4˚F~16˚F(2℃~10℃)** (Refrigerator) (The Unit of Setting : 2˚F(2℃))

No	Setting Mode	Mode Sign	How to Setting
3	**Defrost Frequency Setting Mode**	**"dt"**	1. To enter this mode, press **[MODE/SET]** and **[UP or DOWN]** simultaneously until **[dt]** is displayed. 2. Then press **[MODE/SET]** to see current defrost frequency. 3. To change the defrost frequency, press **[UP or DOWN]** until the desired value is displayed. 4. At the end of the sequence, press **[MODE/SET]** to set the value. 5. To display the cabinet temperature again, press **[UP or DOWN]** until **[th]** is displayed and then press **[VERIFY]**. 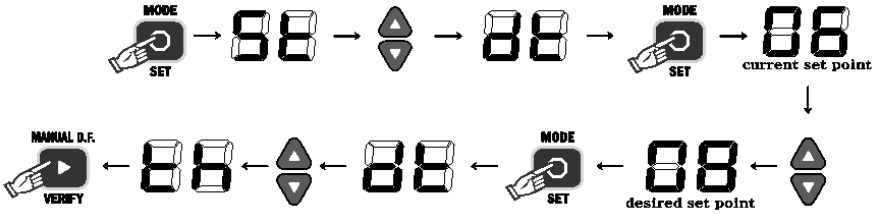 6. Range of adjustable defrost frequency : **4Hr to 12Hr** (The Unit of frequency : 2Hr)
4	**Forced Defrost Mode**	**"dF"**	1. To enter this mode, press **[MODE/SET]** and **[UP or DOWN]** simultaneously until **[dF]** is displayed. 2. Then press **[MANUAL DF]** more than **2 seconds** to start forced defrost. 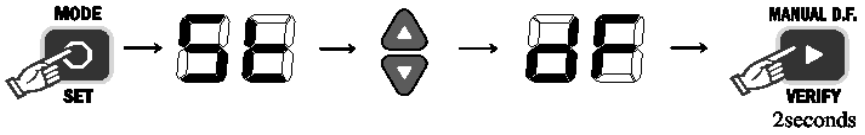 3. During defrosting, **[dF]** is displayed instead of the cabinet temperature.
5	**Cancelation of Forced Defrost Mode**	**Flash "dF"**	1. During forced defrost, press **[MANUAL DF]** more than 2 seconds to stop forced defrost. 2. The [dF] will be flash 5 times and then return to normal display mode. 
6	**Rapid Freeze Mode (Freezer)**	**"tb"**	1. To enter this mode, press **[MODE/SET]** and **[UP or DOWN]** simultaneously until **[tb]** is displayed. 2. Then press **[MODE/SET]** more than **2 seconds** to start rapid freeze mode. 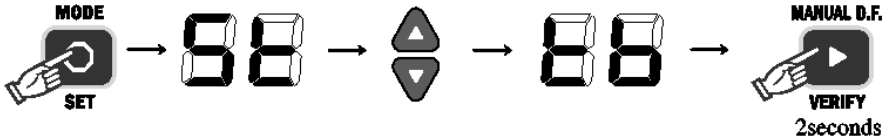 3. During rapid freeze, **[tb]** is displayed instead of the cabinet temperature.

3) NORMAL CONTROL PROCESS

No	FUNCTION	FUNCTION SPEC
1	**Initial Operating**	1. After Power ON, Display panel will be lightened for 2 seconds with buzzer then displays cabinet interior temperature. 2. If cabinet interior temperature is higher than 14˚F(-10℃) Freezer or 50˚F(10℃) Refrigerator, compressor will run without delay, and lower than 14˚F(-10℃) Freezer or 50˚F(10℃) Refrigerator, compressor will run after 3 minutes.
2	**Normal Operating**	1. Compressor and condenser fan motor is controlled by T-sensor and MICOM program. 2. Compressor ON/OFF Temperature Compressor ON : Temperature Setting Value ＋ (Temperature Differential Setting Value/2) Compressor OFF : Temperature Setting Value - (Temperature Differential Setting Value/2) ex) St: -9˚F(-23℃), di: 10˚F(6℃) ⇒ Compressor ON : -9+(10/2) = -4˚F(-20℃), Compressor OFF: -9-(10/2) = -14˚F(-26℃) St: 39˚F(4℃), di: 10˚F(6℃) ⇒ Compressor ON : 39+(10/2) = 44˚F(7℃), Compressor OFF: 39-(10/2) = 34˚F(1℃)

<table>
<tr><th>No</th><th>FUNCTION</th><th>FUNCTION SPEC</th></tr>
<tr><td>3</td><td>Rapid Freeze (Freezer)</td><td>1. Compressor and cabinet interior cooling fan is running continuously for 120 minutes without control by sensor.
2. It is impossible to set the other modes during Rapid Freeze Mode. It is necessary to cancel the Rapid Freeze Mode before setting the other modes.
3. If Defrost Mode become in the Rapid Freeze Mode duration, Defrost Mode will start after the Rapid Freeze Mode finished.
4. Rapid Freeze Mode will be start after Defrost Mode finished not during Defrost Mode. [tb] is displayed from starting the Rapid Freeze Mode.</td></tr>
<tr><td rowspan="2">4</td><td>Defrost (Freezer)</td><td>1. Defrost process is like below
<table>
<tr><th>Process</th><th>Controlled Part</th><th>Description</th></tr>
<tr><td>Pre-Cool</td><td>Compress or On
Evaporator Fan On
Condenser Fan On
Defrost Heater Off</td><td>① It prevent exceed temperature rise during defrosting,
② Cycle is run continuously until current compressor cut-out temperature reach.
③ Maximum time: 30minutes</td></tr>
<tr><td>Defrost</td><td>Compress or Off
Evaporator Fan Off
Condenser Fan Off
Defrost Heater On</td><td>① Preprogrammed frequency interval
② If D-sensor is higher than 50˚F, defrost heater off
③ Maximum time: 40minutes</td></tr>
<tr><td>Pause</td><td>Compress or Off
Evaporator Fan Off
Condenser Fan Off
Defrost Heater Off</td><td>① Time: 5minutes</td></tr>
<tr><td>Evaporator Fan Delay</td><td>Compress or On
Evaporator Fan Off
Condenser Fan On
Defrost Heater Off</td><td>① If D-sensor is lower than -4˚F, fan delay terminated
② Maximum time: 10minutes</td></tr>
</table></td></tr>
<tr><td>Defrost (Refrigerator)</td><td>1. Defrost cycle can be set up by button on control panel from 4h to 12hr. (measurement unit: 2hr / default: 12hr)

2. Defrost control change
1) Defrost start : according to the defrost cycle by set up.
2) Defrost end : Comp OFF (during MAX time), Eva fan ON, dF ON (on display screen)
3) Defrost ends regardless of time when the temp is higher than pre-set defrost end temp.
4) 'dF' is displayed on screen for 3min after defrost end.
- Defrost end time (MAX) : 30min
- Defrost end temp : 41˚F(5℃)</td></tr>
</table>

No	FUNCTION	FUNCTION SPEC
5	**Default Setting (Freezer)**	1. Temperature Setting : **-5°F(-20℃)**, Temp.Differential Setting : **8°F(4℃) in display** 2. Displayed Temperature : **-8°F(-21℃)**(comp. off) **~ 0°F(-17℃)**(comp. on) owing to correction factor 3. T-Sensor Operating Temperature : **-9°F(-22℃)**(comp. off) **~ -1°F(-18℃)**(comp. on) 4. Defrost Frequency Setting : **12Hr**
	Default Setting (Refrigerator)	1. Temperature Setting : **36°F(4℃)**, Temperature Differential Setting : **8°F(4℃)** 2. Operating Temperature : **40°F(6℃)**(comp. on) **~ 32°F(2℃)**(comp. off) 3. Defrost Frequency Setting : **12Hr**
6	**Setting Back UP**	1. In case of unexpected power failure or power off, does not require resetting. 2. The setting is memorized.
7	**Error Display**	1. If cabinet interior temp. is higher than 14°F(-5℃) Freezer or 68°F (15℃) Refrigerator, the panel displays **[Hi]**, and lower than -50°F(-40℃) Freezer or 14°F(-2℃) Refrigerator, the panel displays **[Lo]**. 2. Press [down] button 5 times with pressing and holding [up] button, the Error display mode is activated and it displays errors. 3. When there are more than 2 errors, the errors are displayed alternately. 4. If you press **[MODE/SET]** button, the error display mode will be finished

4) ERROR CODE

4-1) Freezer

Error Code	Condition	Possible Cause	When error occurring, operation
C1	During normal mode (not defrost mode), D-sensor sensing is higher than 23˚F and Compressor does not run for 60min after compressor off	• Ambient Temperature too low (below-5˚F) • T-sensor defective	1) Register “C1” 2) Compressor ON:20Minutes 3) Compressor OFF:5Minutes 4) Operate 2),3) three times 5) Operate Normal Mode
C2	Entering defrost mode, D-sensor sensing is higher than 50˚F and T-sensor sensing is lower than 14˚F	• D-sensor defective	1) Register “C2” 2) Operate Pre-Cool step: 30Minutes 3) Defrost Heater ON: 20Minutes 4) Operate the rest Defrost Mode
C3	After defrost mode elapsed for 40minutes, D-sensor sensing is lower than 23˚F	• D-sensor defective • Defrost heater defective	1) Register “C3” 2) Operate the rest Defrost Mode
C4	T-sensor sensing is more than 18˚F higher than temperature set point for 4hours Additional Possible Cause: Too many hot goods loaded!!	• Refrigerant leak • Control board defective • Door not sealing • Not enough defrosts • Condenser dirty • Sensor defective	1) Register “C4” 2) Compressor ON:20Minutes 3) Compressor OFF:5Minutes 4) Operate 2),3) three times 5) Operate Normal Mode
C-	No error code	• N/A	N/A

4-2) Refrigerator

Error Code	Condition	Possible Cause	When error occurring
C1	During normal mods, T-sensor sensing lasts “Lo" status more than 60 minutes	• T-Sensor defective • Lead defective	1) Register "C1" 2) Compressor ON : 15 Minutes 3) Compressor OFF: 5 Minutes 4) Operate 2), 3) repeatedly until the error is clear 5) Operate Normal Mode 6) Defrost cycle is operated by D-sensor
C2	During normal mode T-sensor sensing lasts "Hi" status more than 60 minutes	• Sensor housing defective (due to other substance) • Sensor internal defective	1) Register “C2” 2) Compressor OFF: 22 Minutes 3) Compressor ON : 15 Minutes 4) Operate 2), 3) repeatedly until the error is clear 5) Operate Normal Mode 6) Defrost cycle is operated by D-sensor
C3	After defrost mode elapsed for 30 minutes. D-sensor sensing is lower than 32°F	• Not enough defrosts	1) Register "C3” 2) Error check 3) Main power reset
C4	T-Sensor sensing is more than 18°F higher than temperature set point for 4 hours and more	• Too many hot goods loaded • Refrigerant leak • Control board defective • Door not sealing • Not enough defrosts • Condenser dirty • Sensor defective	1) Register “C4” 2) Compressor OFF: 15 Minutes 3) Compressor ON : 5 Minutes 4) Operate *2),* 3) repeatedly until the error is clear 5) Operate Normal Mode 6) Defrost cycle is operated by D-sensor
C5	D-Sensor Sensing is over 140°F or under -55.4°F for 1 minute	• D-Sensor defective • Lead defective	1) Register "C5” 2) Defrost end is operated by time (30 Minutes)

2. OPERATION FOR GR26H, GR48S, GR70H MODELS

1) BASIC OPERATION

① Plug in the power cord and turn on the lamp switch located on the left of the temperature controller.
[The unit should be plugged into a **115V±10%, 60Hz**]

② The controller(Thermostat) has been preset "3" position at the factory

2) DEFROST

① This unit uses an off cycle defrost. No needs any programming.

3) CONTROL TEMPERATURE

① The temperature controller is mounted on top of the cabinet interior.

② The controller has been preset "4" position at the factory to maintain the average cabinet temperature of 38˚F (3℃)

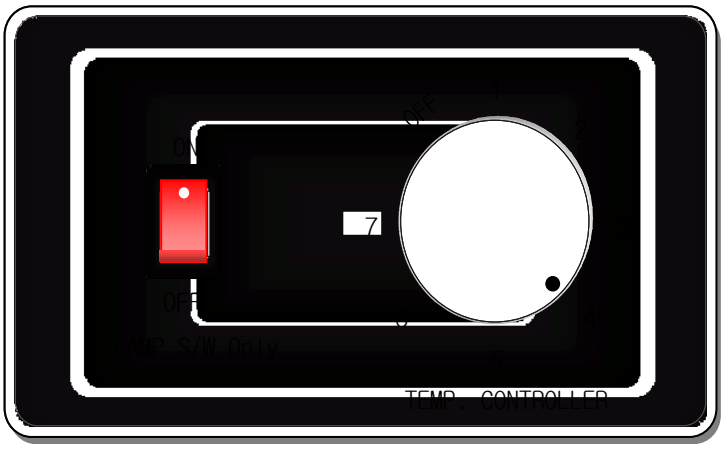

4) LAMP

① The light comes on when the lamp switch is on.

3. INSTRUCTION FOR RE-HINGING DOOR (F23/R23)

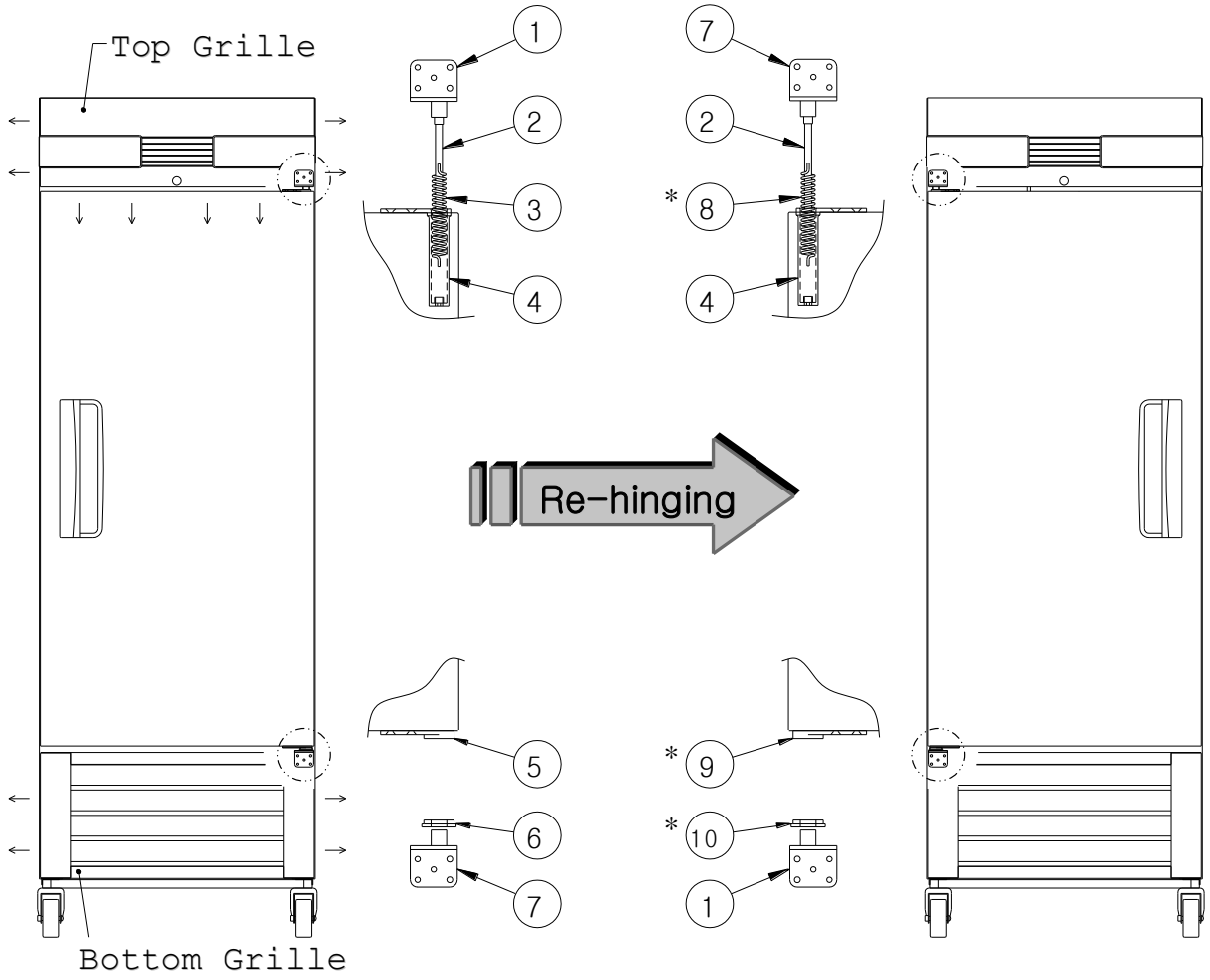

Figure 1. **Figure 2.**

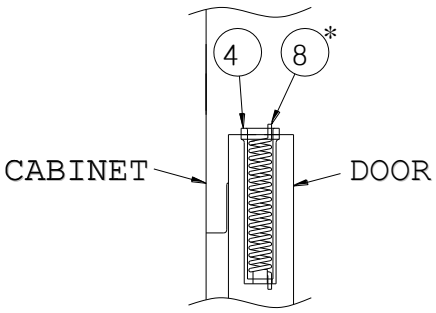

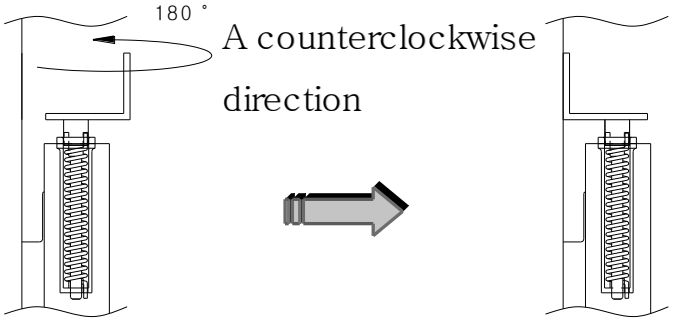

Figure 3. **Figure 4.**

▣ To change the door mounting from right hand to left hand hinges you will need the following;

▣ Medium to large size Phillips Screwdriver

146413 Door Hinge Kit - Lower Left

146442 Door Hinge Kit - Top Left

STEP1. Remove the door (Figure 1)

a) Remove the Top Grille (seven screws)
b) Remove the Lower Grille (four screws)
c) Remove the Top Hinge (#1) (four screws)
d) Lift and remove the Door
e) Remove the Bottom Hinge (#7) (four screws)

STEP2. Convert the Door

a) Replace the Spring Guide (#4) with Bushing (#9)-(SEE 146413 HINGE KIT)
b) Replace the Bushing (#5) with the Spring Guide (#4).

STEP3. Reinstall the Door (figure 2)

a) Install Bottom Left Hinge (#1) with Bushing (#10)-(SEE 146413 HINGE KIT)
b) Set Door in place on Bottom Hinge
c) Insert Spring (#8) (silver) into Spring Guide (#4) as shown in figure 3-(SEE 146442 HINGE KIT)
d) Install the Top Hinge (#7) as shown in figure 4-(SEE 146442 HINGE KIT)
(confirm that spring ends are engaged in the spring guide and hinge)
e) Replace the Top and Lower Grilles

Note:

The silver colored spring (#8) is for left hand hinged door and the yellow color spring (#3) is for right hand hinged doors.

The letter "L" is marked on the left hand bushings (#9 and #10)

C. SERVICE LIST AND EXPLODED VIEW

1. COMMERCIAL FREEZERS AND REFRIGERATORS - - - - - - - - - - C2

1) F23/F49/F72-S, R23/R49/R72-S **SERVICE LIST & EXPLODED VIEW**

2) F23/F49/F72-SH, R23/R49/R72-SH **SERVICE LIST & EXPLODED VIEW**

3) R23/R49/R72-G **SERVICE LIST & EXPLODED VIEW**

2. MERCHANDISERS - C23

1) GR26H, GR48S, GR70H **SERVICE LIST & EXPLODED VIEW**

1. COMMERCIAL FREEZERS AND REFRIGERATORS

1-1. SERVICE LIST (F23/F49/F72-S , R23/R49/R72-S)

No.	PART NAME	PART No.					
		F23-S	F49-S	F72-S	R23-S	R49-S	R72-S
1	Door Hinge Kit - Top Right	146441	146441	146441	146441	146441	146441
2	Door Hinge Kit - Top Left	NA	146442	146442	NA	146442	146442
3	Door Hinge Kit - Lower Right	146412	146412	146412	146412	146412	146412
4	Door Hinge Kit - Lower Left	NA	146413	146413	NA	146413	146413
5	Door Hinge Kit - Lower Center	NA	NA	146414	NA	NA	146414
6	Control PCB Assembly (115V) Used thru 12/2014	146416	146417	146418	150313	150313	150313
	Control PCB Assembly (115V) Universal (°F/℃) PCB	150539	150540	150541	150538	150538	150538
7	Main Transformer (115V)	146420	146420	146420	146420	146420	146420
8	DC Relay	146421	146421	146421	146421	146421	146421
9	Relay Wire Harness	146423	146423	146423	146423	146423	146423
10	Front PCB Wire Harness	146424	146424	146424	146424	146424	146424
11	Temperature Sensor use up to 12/2011				146425	146427	146429
11-1	Sensor Kit (Includes T-sensor and D-sensor)	146426	146428	146430	146426	146428	146430
12	Pilaster	146411	146411	146411	146411	146411	146411
13	Shelf Clip	146489	146489	146489	146489	146489	146489
14	Door Assembly - Right Hand	146436	146437	146439	146436	146437	146439
15	Door Assembly - Left Hand	NA	146438	146440	NA	146438	146440
16	Door Gasket	146444	146444	146445	146444	146444	146445
17	Lamp (115V)	146408	146408	146408	146408	146408	146408
18	Lamp Socket	146409	146409	146409	146409	146409	146409
19	Lamp Cover	146410	146410	146410	146410	146410	146410
20	Top Grille Assembly (115V)	146433	146434	146435	146433	146434	146435
21	Top Grill Cover - Right	146431	146431	146431	146431	146431	146431
22	Front PCB Assembly Used thru 12/2014	146419	146419	146419	146419	146419	146419
	Front PCB Assembly Universal (°F/℃) PCB	150537	150537	150537	150537	150537	150537
23	Control Decal	146432	146432	146432	146432	146432	146432

No.	PART NAME	PART No.					
		F23-S	F49-S	F72-S	R23-S	R49-S	R72-S
24	Light Switch	146449	146449	146449	146449	146449	146449
25	Door Lock& Key	146443	146443	146443	146443	146443	146443
26	Power Switch	146450	146450	146450	146450	146450	146450
27	Condensate Pan w/paper	146386	146387	146387	146386	146387	146387
28	Lower Grille Assembly	146388	146389	146390	146388	146389	146390
29	Caster Kit	100436	100436	100437	100436	100436	100437
30	Power Cord	138533	138533	161576	138533	138533	138533
31	Evaporator Coil	146392	146394	146396	146391	146393	161569
32	Defrost Limit Switch	146404	146404	146404	NA	NA	NA
33	Defrost Heater (115V)	146397	146398	146399	NA	NA	NA
34	Drain Heater (115V)	146403	146403	146403	NA	NA	NA
35	Drain Pan Heater (115V)	146400	146401	146402	NA	NA	NA
36	Evaporator Fan Guard	146405	146405	146405	146405	146405	146405
37	Evaporator Fan Blade	146406	146406	146406	146406	146406	146406
38	Evaporator Fan Motor (115V)	146407	146407	146407	146407	146407	146407
39	Condenser Coil	161567	161570	161570	161562	161562	161567
40	Condenser Fan Blade	146371	146371	146371	146371	146371	146371
41	Condenser Fan Motor (115V)	146370	146370	146370	146370	146370	146370
42	Suction pipe(B) Assembly	161568	161571	161574	161563	161563	161568
43	Dryer	161564	161564	161575	161564	161564	161564
44	Compressor (115V)	150556	161572	161577	161565	161565	150556
45	Compressor Electrical Kit	150557	161573	161578	161566	161566	150557
46	Shelf	146446	146447	146446 146448	146446	146447	146446 146448
47	Shelf Kit(1Shelf + 4 Clips)	146516	146517	146516 146518	146516	146517	146516 146518

* Shelf: F(R) 72 - 146446 (ENDS), 146448 (CENTER)

* Shelf Kit: F(R) 72 - 146516 (ENDS), 146518 (CENTER)

* Cap. Tube: 161592(F23/49, R23/49/72), 161593(F72)

1-2. F23-S EXPLODED VIEW

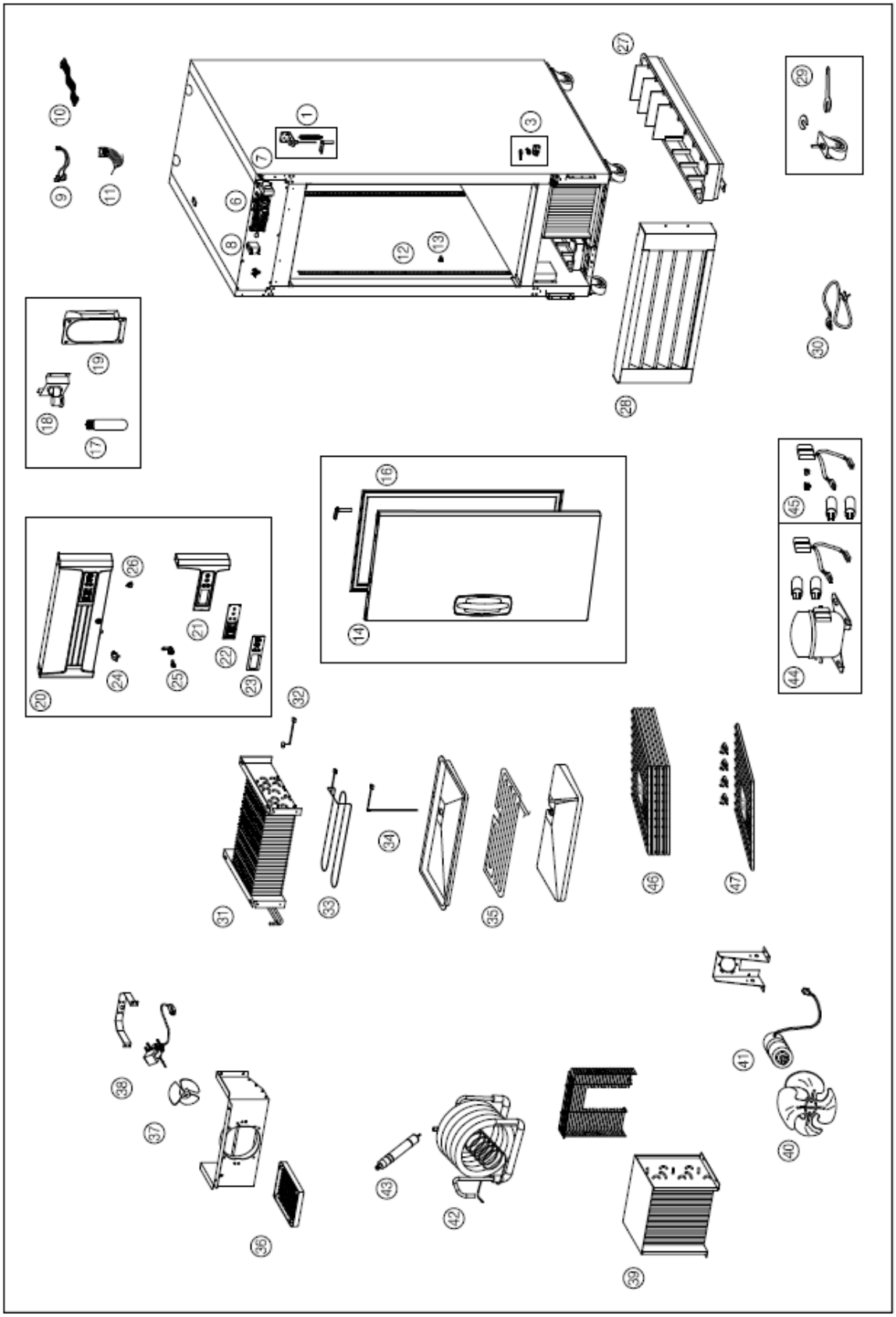

1-3. F49-S EXPLODED VIEW

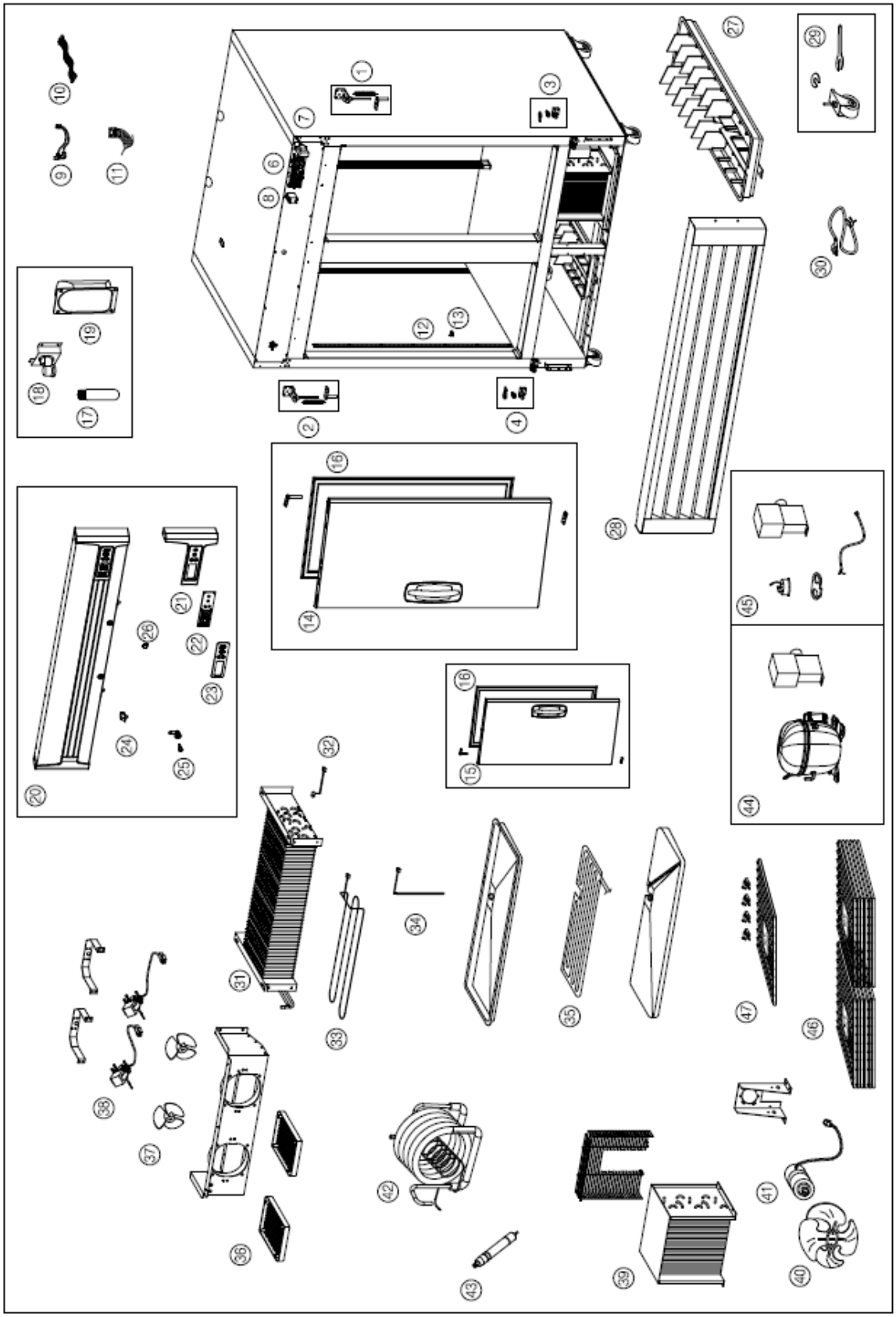

1-4. F72-S EXPLODED VIEW

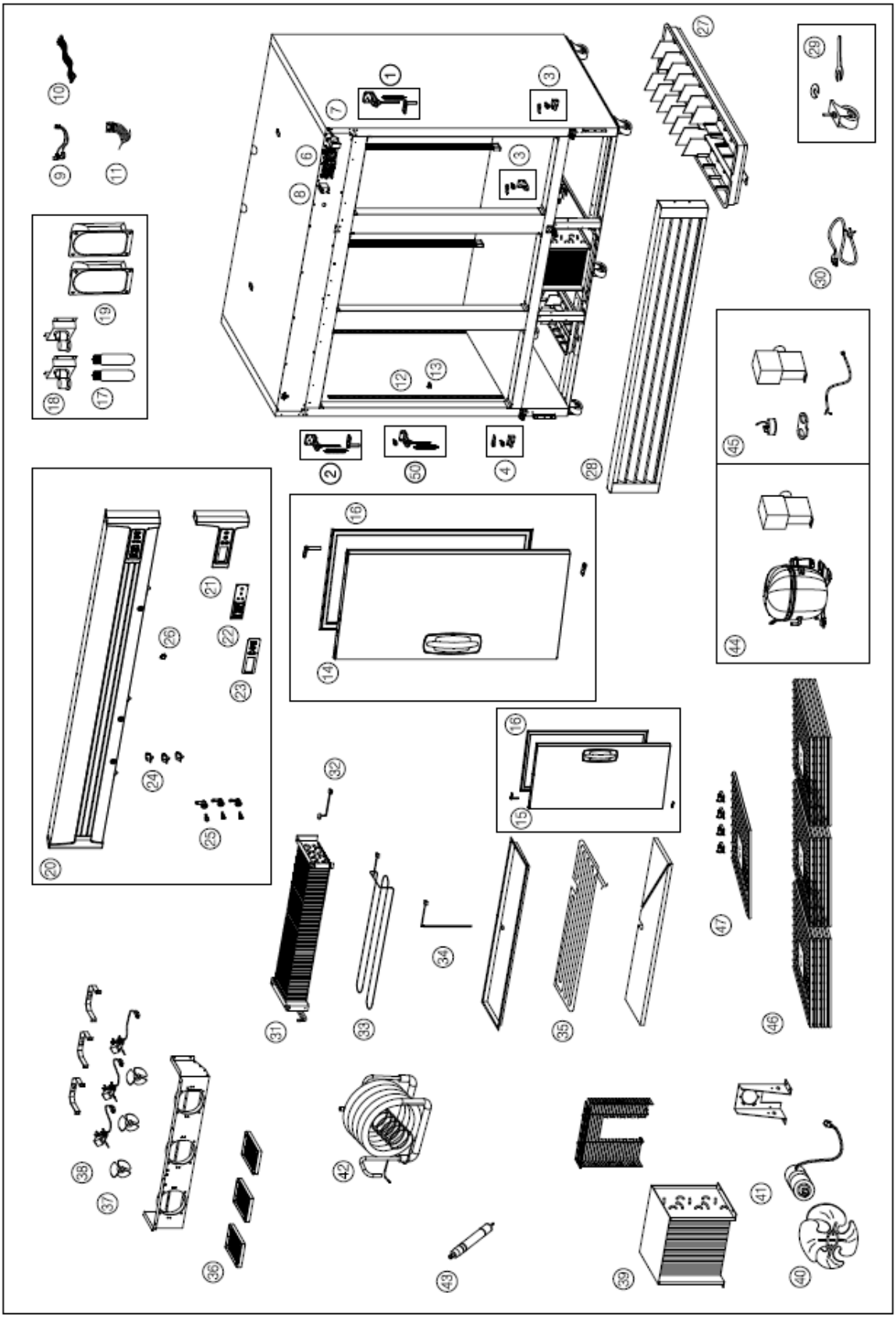

1-5. R23-S EXPLODED VIEW

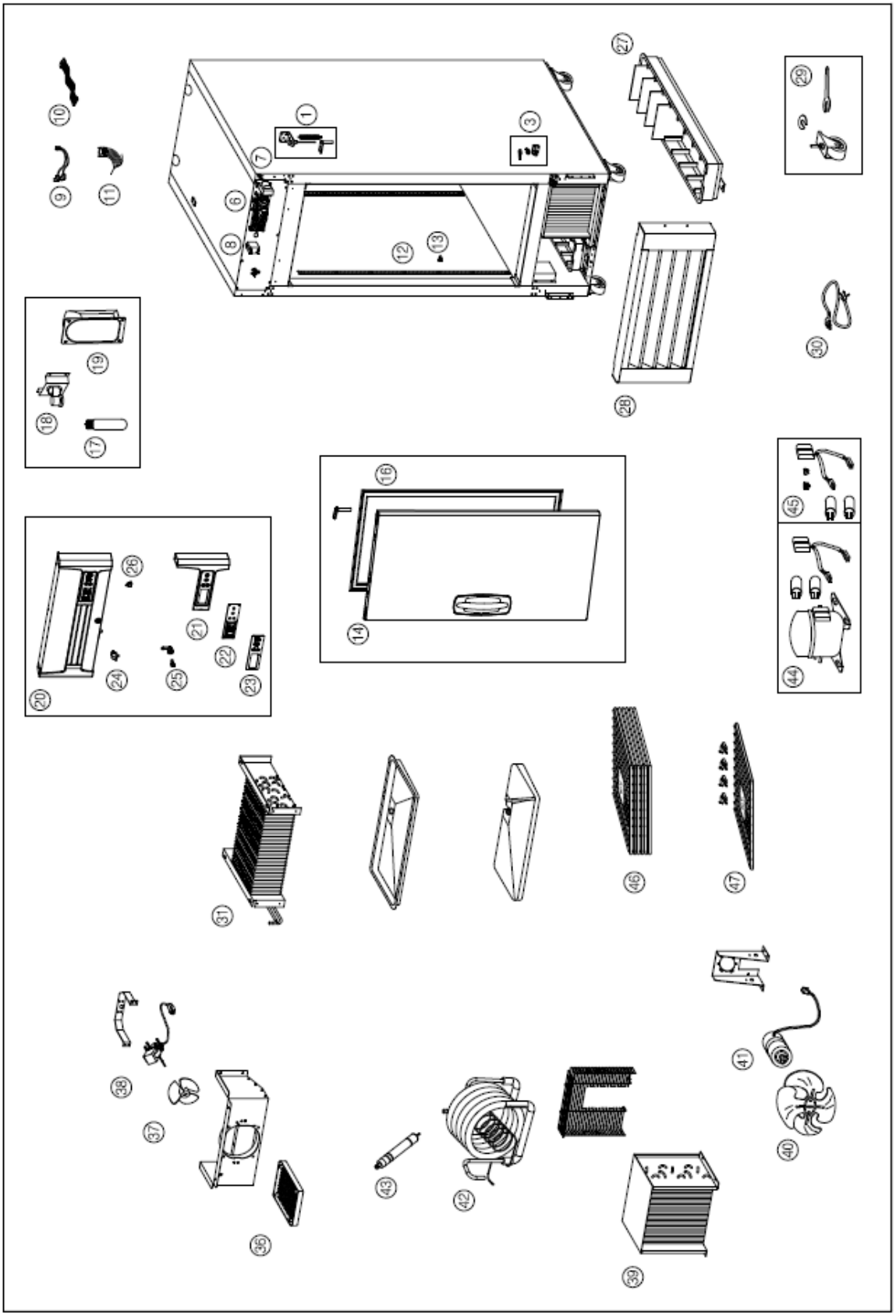

1-6. R49-S EXPLODED VIEW

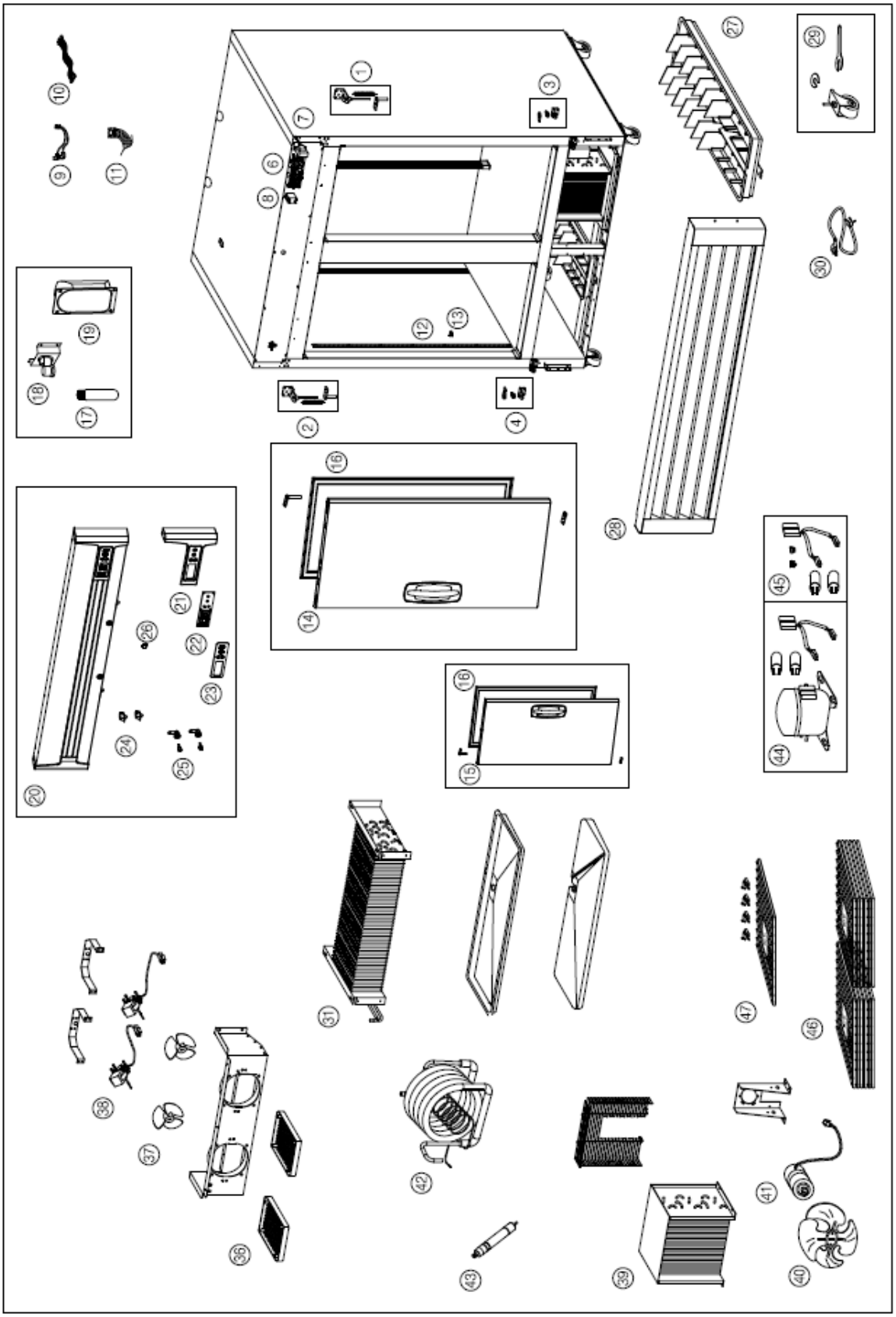

1-7. R72-S EXPLODED VIEW

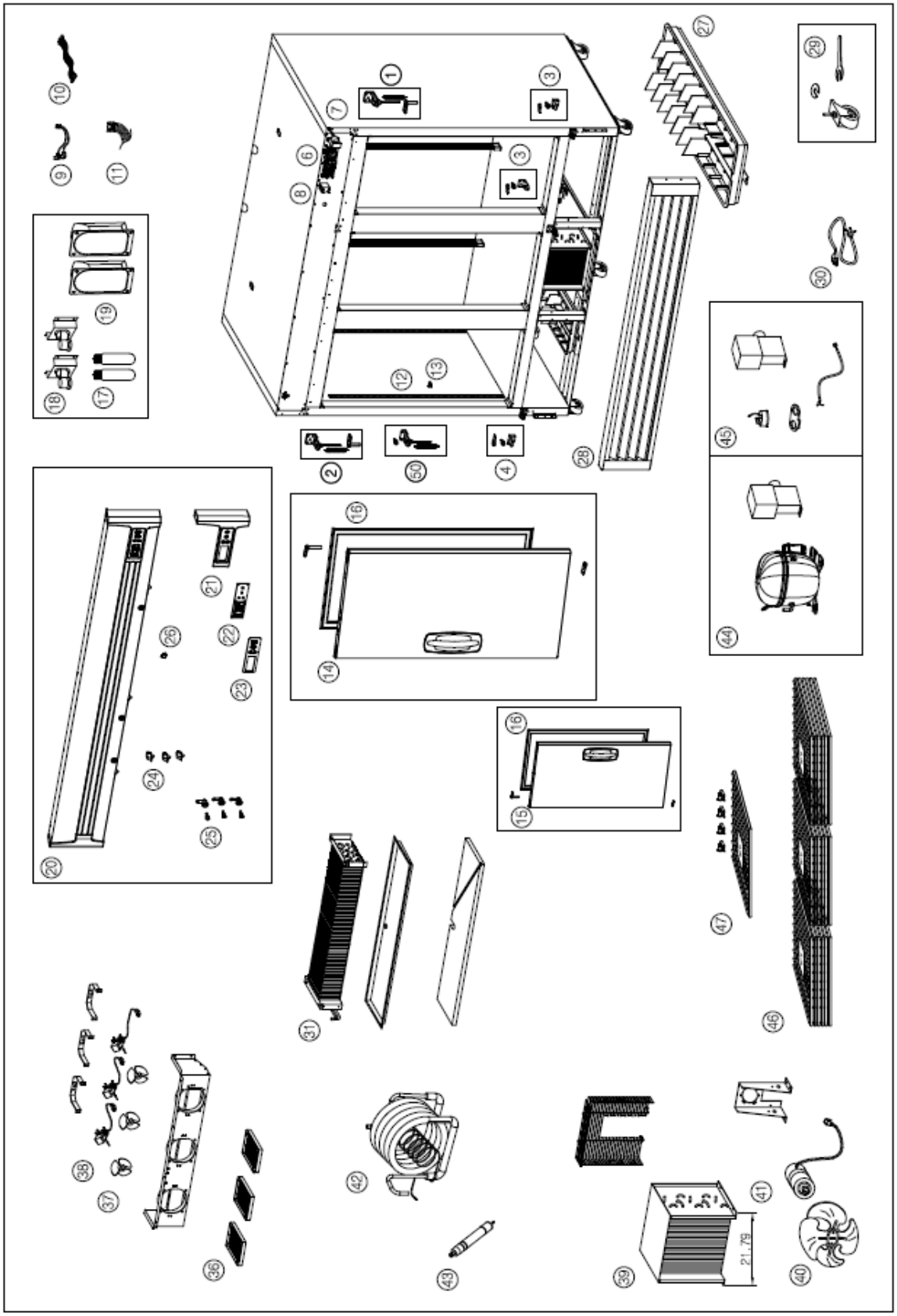

2-1. SERVICE LIST(F23/F49/F72-SH , R23/R49/R72-SH)

No.	PART NAME	PART No.					
		F23-SH	F49-SH	F72-SH	R23-SH	R49-SH	R72-SH
1	Door Hinge Kit - Top Right	146441	146441	146441	146441	146441	146441
2	Door Hinge Kit - Top Left	NA	146442	146442	NA	146442	146442
3	Door Hinge Kit - Lower Right	146412	146412	146412	146412	146412	146412
4	Door Hinge Kit - Lower Left	NA	146413	146413	NA	146413	146413
5	Door Hinge Kit - Lower Center	NA	NA	146414	NA	NA	146414
6	Control PCB Assembly (115V) Used thru 12/2014	146416	146417	146418	150313	150313	150313
	Control PCB Assembly (115V) Universal (°F/℃) PCB	150539	150540	150541	150538	150538	150538
7	Main Transformer (115V)	146420	146420	146420	146420	146420	146420
8	DC Relay	146421	146421	146421	146421	146421	146421
9	Relay Wire Harness	146423	146423	146423	146423	146423	146423
10	Front PCB Wire Harness	146424	146424	146424	146424	146424	146424
11	Temperature Sensor use up to 12/2011	NA	NA	NA	146425	146427	146429
11-1	Sensor Kit (Includes T-sensor and D-sensor)	146426	146428	146430	146426	146428	146430
12	Pilaster	146411	146411	146411	146411	146411	146411
13	Shelf Clip	146489	146489	146489	146489	146489	146489
14	Door Assembly - Upper Right Hand	160501	160505	160510	160501	160505	160510
14-1	Door Assembly - Upper Left Hand	NA	160507	160512	NA	160507	160512
15	Door Assembly – Lower Right Hand	160502	160502	160511	160502	160502	160511
15-1	Door Assembly – Lower Left Hand	NA	160508	160513	NA	160508	160513
16	Door Gasket	160503	160503	160514	160503	160503	160514
17	Lamp (115V)	146408	146408	146408	146408	146408	146408
18	Lamp Socket	146409	146409	146409	146409	146409	146409
19	Lamp Cover	146410	146410	146410	146410	146410	146410
20	Top Grille Assembly (115V)	146433	146434	146435	146433	146434	146435
21	Top Grill Cover - Right	146431	146431	146431	146431	146431	146431
22	Front PCB Assembly Usedthru 12/2014	146419	146419	146419	146419	146419	146419
	Front PCB Assembly Universal (°F/℃) PCB	150537	150537	150537	150537	150537	150537
23	Control Decal	146432	146432	146432	146432	146432	146432

No.	PART NAME	PART No.					
		F23-SH	F49-SH	F72-SH	R23-SH	R49-SH	R72-SH
24	Light Switch	146449	146449	146449	146449	146449	146449
25	Door Lock& Key	146443	146443	146443	146443	146443	146443
26	Power Switch	146450	146450	146450	146450	146450	146450
27	Condensate Pan w/paper	146386	146387	146387	146386	146387	146387
28	Lower Grille Assembly	146388	146389	146390	146388	146389	146390
29	Caster Kit	100436	100436	100437	100436	100436	100437
30	Power Cord	138533	138533	161576	138533	138533	138533
31	Evaporator Coil	146392	146394	146396	146391	146393	161569
32	Defrost Limit Switch	146404	146404	146404	NA	NA	NA
33	Defrost Heater (115V)	146397	146398	146399	NA	NA	NA
34	Drain Heater (115V)	146403	146403	146403	NA	NA	NA
35	Drain Pan Heater (115V)	146400	146401	146402	NA	NA	NA
36	Evaporator Fan Guard	146405	146405	146405	146405	146405	146405
37	Evaporator Fan Blade	146406	146406	146406	146406	146406	146406
38	Evaporator Fan Motor (115V)	146407	146407	146407	146407	146407	146407
39	Condenser Coil	161567	161570	161570	161562	161562	161567
40	Condenser Fan Blade	146371	146371	146371	146371	146371	146371
41	Condenser Fan Motor (115V)	146370	146370	146370	146370	146370	146370
42	Suction pipe(B) Assembly	161568	161571	161574	161563	161563	161568
43	Dryer	161564	161564	161575	161564	161564	161564
44	Compressor (115V)	150556	161572	161577	161565	161565	150556
45	Compressor Electrical Kit	150557	161573	161578	161566	161566	150557
46	Shelf	146446	146447	146446 146448	146446	146447	146446 146448
47	Shelf Kit(1Shelf + 4 Clips)	146516	146517	146516 146518	146516	146517	146516 146518
48	Door Hinge Kit - Center Right	160504	160504	160504	160504	160504	160504
49	Door Hinge Kit - Center Left	NA	160509	160509	NA	160509	160509

* Shelf: F(R) 72 - 146446 (ENDS), 146448 (CENTER)

* Shelf Kit: F(R) 72 - 146516 (ENDS), 146518 (CENTER)

* Cap. Tube: 161592(F23/49-SH, R23/49/72-SH), 161593(F72-SH)

2-2. F23-SH EXPLODED VIEW

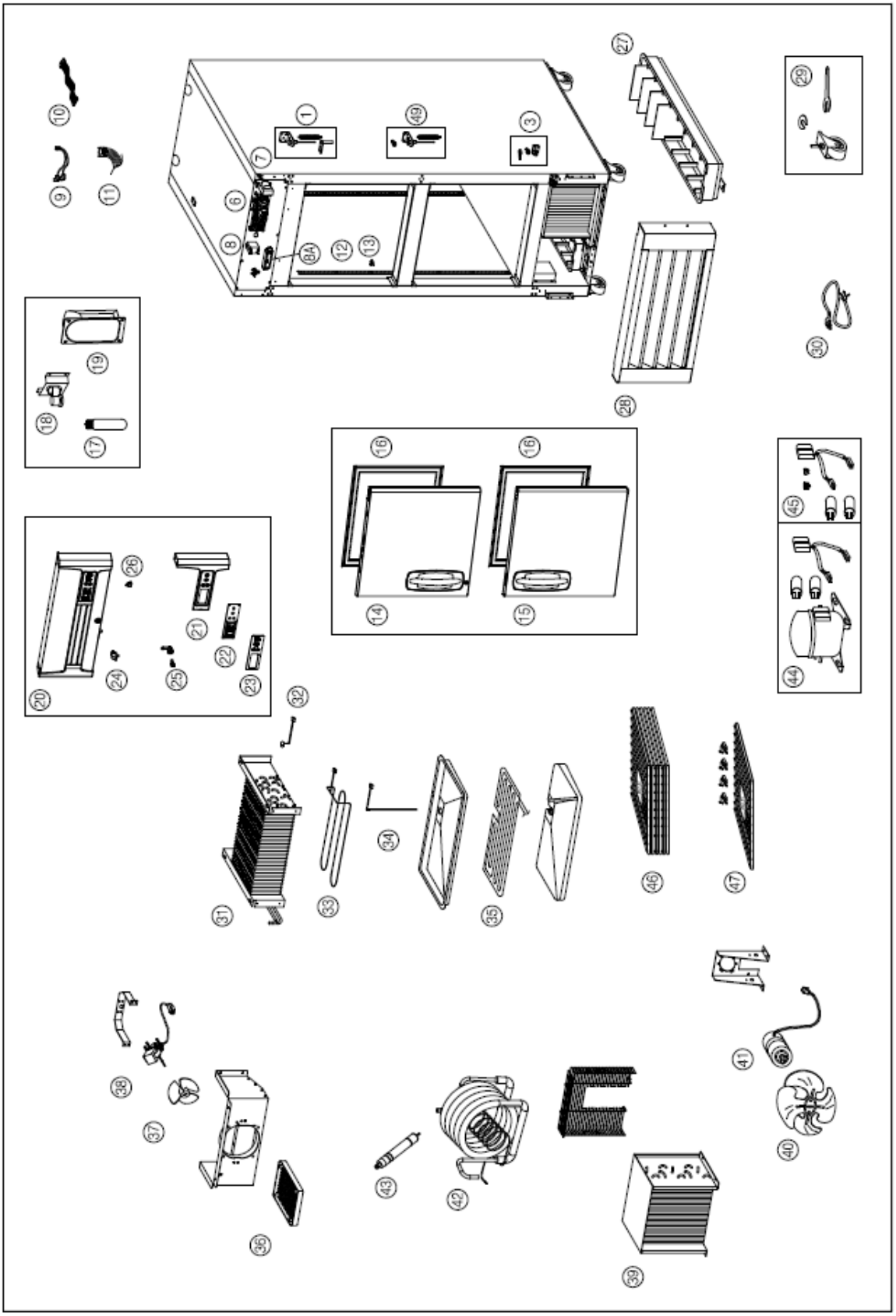

2-3. F49-SH EXPLODED VIEW

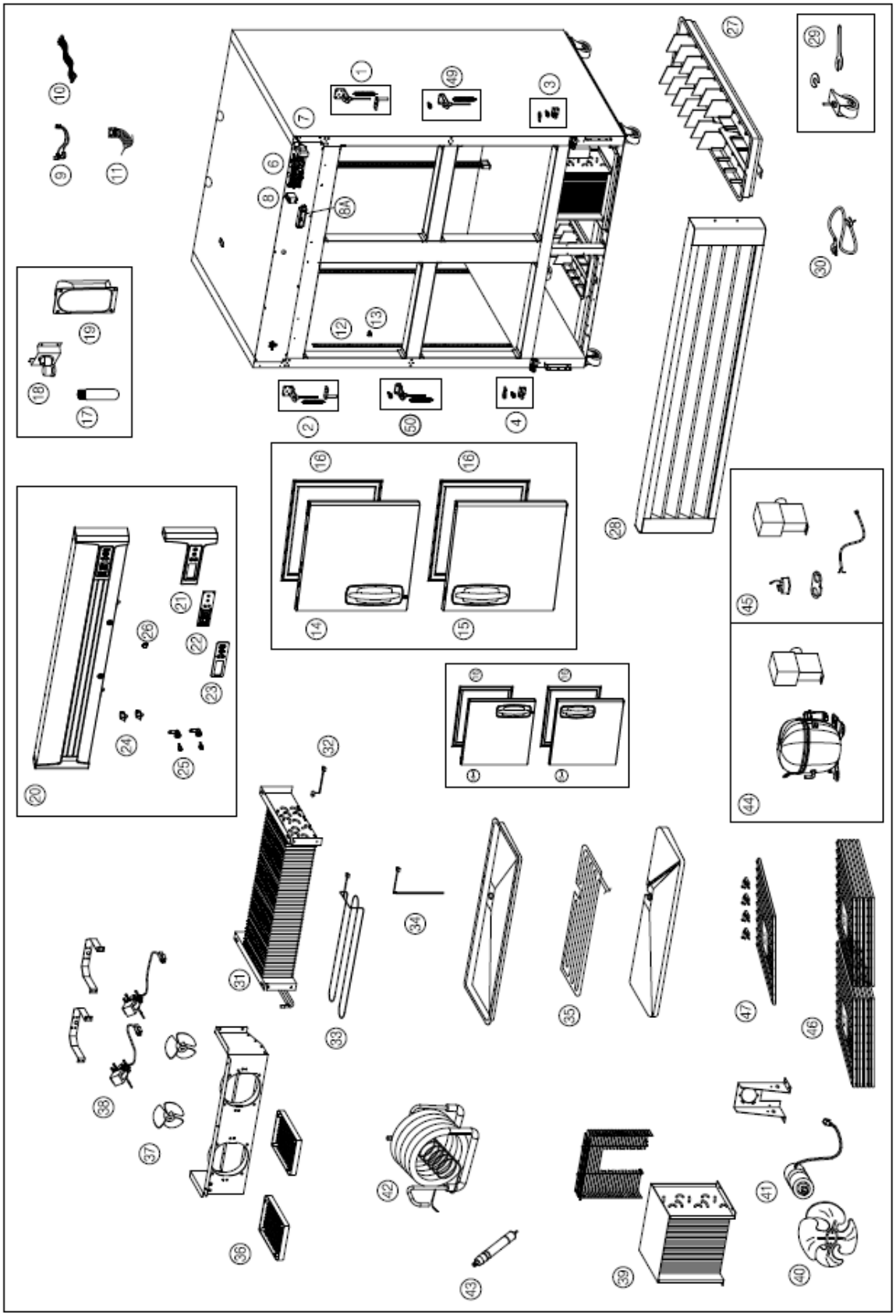

2-4. F72-SH EXPLODED VIEW

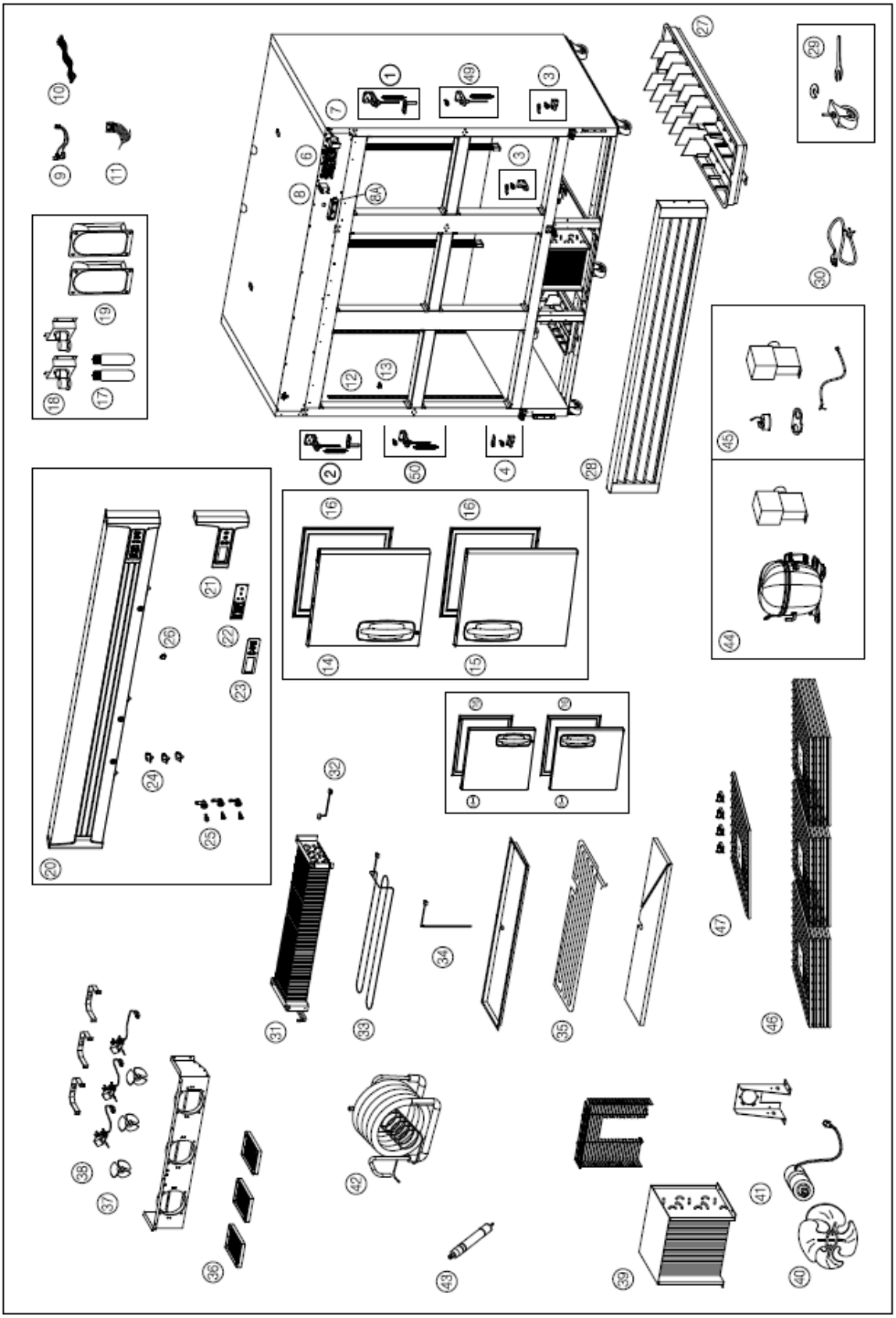

2-5. R23-SH EXPLODED VIEW

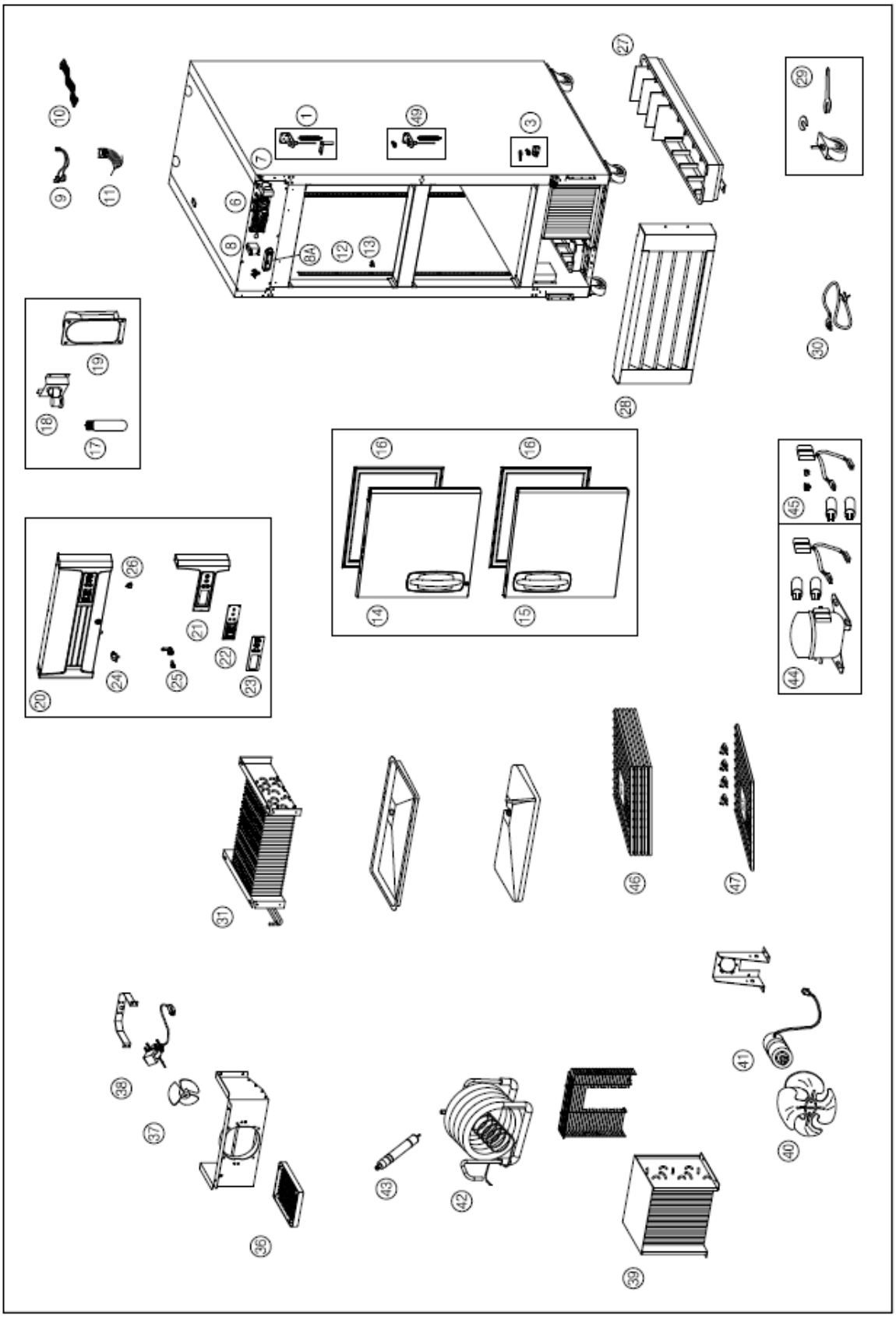

2-6. R49-SH EXPLODED VIEW

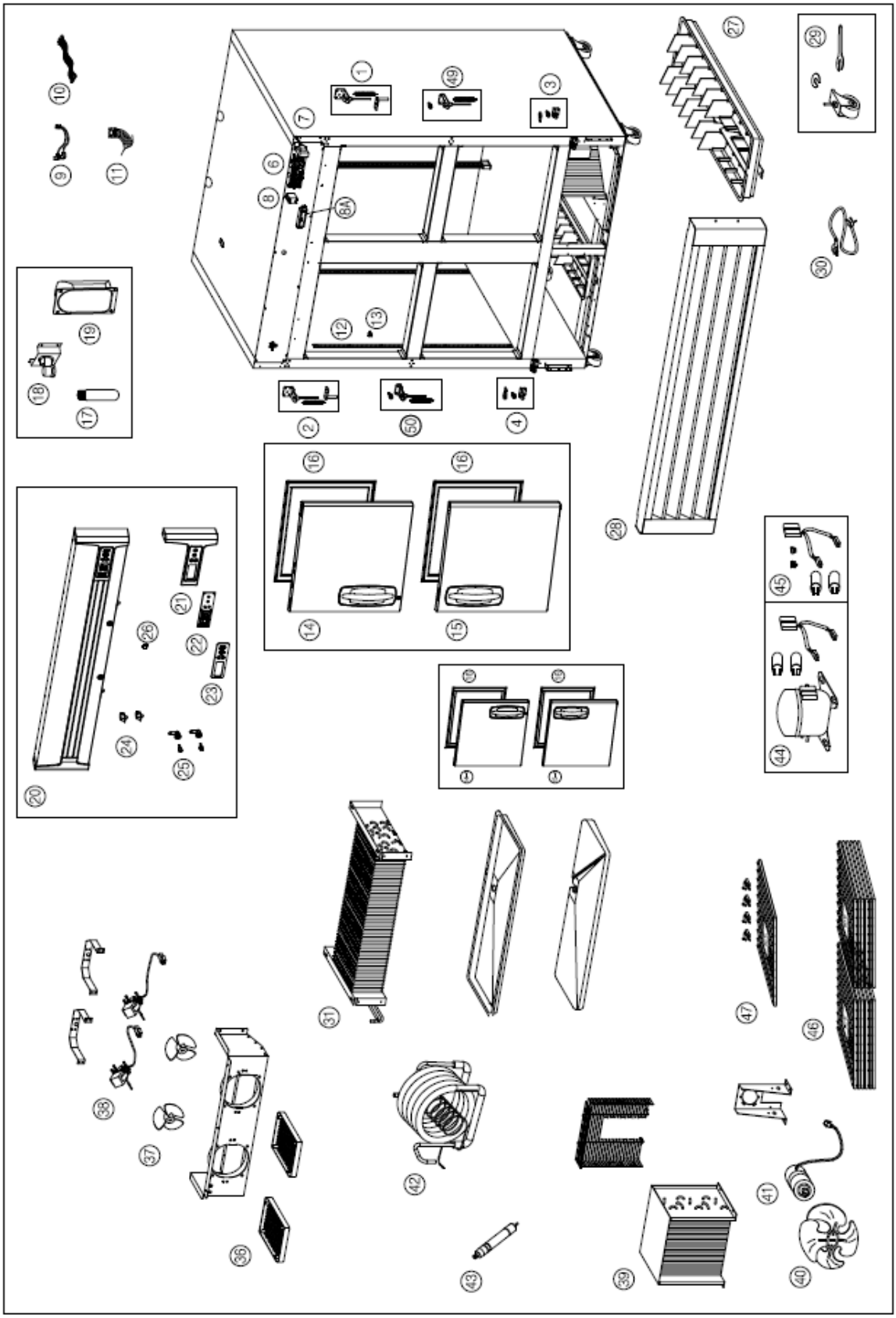

2-7. R72-SH EXPLODED VIEW

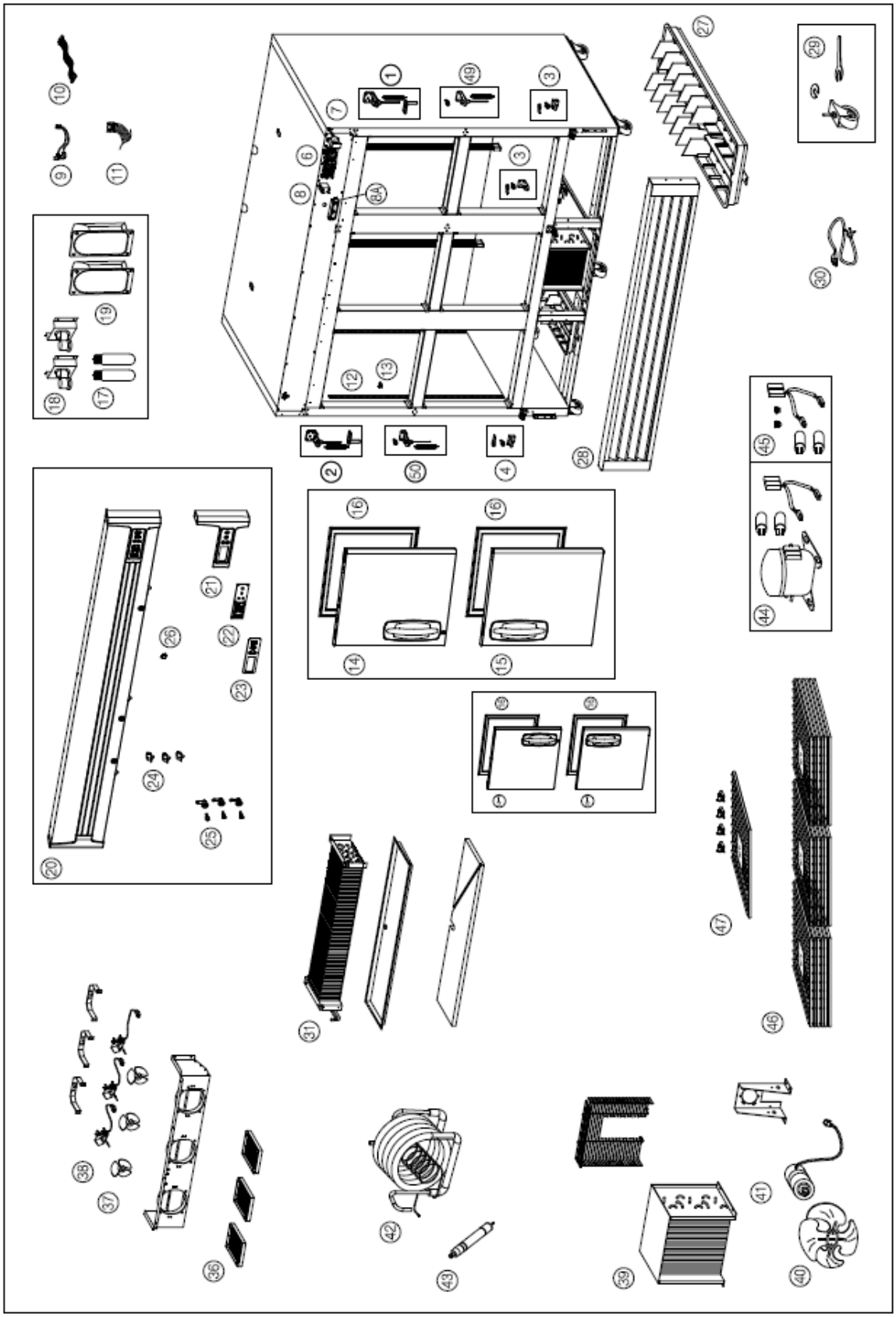

3-1. SERVICE LIST (R23/R49/R72-G)

No.	PART NAME	PART No.		
		R23-G	R49-G	R72-G
1	Door Hinge Kit - Top Right	160515	160515	160515
2	Door Hinge Kit - Top Left	NA	160516	160516
3	Door Hinge Kit - Lower Right	160517	160517	160517
4	Door Hinge Kit - Lower Left	NA	160518	160518
5	Door Hinge Kit - Lower Center	NA	NA	160519
6	Control PCB Assembly (115V) Used thru 12/2014	150313	150313	150313
	Control PCB Assembly (115V) Universal (°F/℃) PCB	150538	150538	150538
7	Main Transformer (115V)	146420	146420	146420
8	DC Relay	146421	146421	146421
8A	LED DRIVER	160530	160530	150571
9	Relay Wire Harness	146423	146423	146423
10	Front PCB Wire Harness	146424	146424	146424
10A	LED Wire Harness	160529	160533	160535
11	Temperature Sensor use up to 12/2011	146425	146427	146429
11-1	Sensor Kit (Includes T-sensor and D-sensor)	146426	146428	146430
12	Pilaster	146411	146411	146411
13	Shelf Clip	146489	146489	146489
14	Door Assembly - Right Hand	160520	160521	160522
15	Door Assembly - Left Hand	NA	160523	160524
16	Door Gasket	160525	160525	146482
17	LED (6W)	160526	160526	160526
18	LED Fixture	160527	160527	160527
19	LED wire cover	160528	160528	160528
20	Top Grille Assembly	160531	160534	160536
21	Top Grill Cover - Right	146431	146431	146431
22	Front PCB Assembly Used thru 12/2014	146419	146419	146419
	Front PCB Assembly Universal (°F/℃) PCB	150537	150537	150537
23	Control Decal	146432	146432	146432

No.	PART NAME	PART No.		
		R23-G	R49-G	R72-G
24	Light S/W → Door Switch (rename)	146449	146449	146449
24A	Light Switch	160532	160532	160532
25	Door Lock& Key	146443	146443	146443
26	Power Switch	146450	146450	146450
27	Condensate Pan w/paper	146386	146387	146387
28	Lower Grille Assembly	146388	146389	146390
29	Caster Kit	100436	100436	100437
30	Power Cord	138533	138533	138533
31	Evaporator Coil	146391	146393	161569
32	Defrost Limit Switch	NA	NA	NA
33	Defrost Heater (115V)	NA	NA	NA
34	Drain Heater (115V)	NA	NA	NA
35	Drain Pan Heater (115V)	NA	NA	NA
36	Evaporator Fan Guard	146405	146405	146405
37	Evaporator Fan Blade	146406	146406	146406
38	Evaporator Fan Motor (115V)	146407	146407	146407
39	Condenser Coil	161562	161562	161567
40	Condenser Fan Blade	146371	146371	146371
41	Condenser Fan Motor (115V)	146370	146370	146370
42	Suction pipe(B) Assembly	161563	161563	161568
43	Dryer	161564	161564	161564
44	Compressor (115V)	161565	161565	150556
45	Compressor Electrical Kit	161566	161566	150557
46	Shelf	146446	146447	146446 / 146448
47	Shelf Kit(1Shelf + 4 Clips)	146516	146517	146516 / 146518

* Shelf: F(R) 72 - 146446 (ENDS), 146448 (CENTER)

* Shelf Kit: F(R) 72 - 146516 (ENDS), 146518 (CENTER)

* Cap. Tube: 161592(R23/49/72-G)

3-2. R23-G EXPLODED VIEW

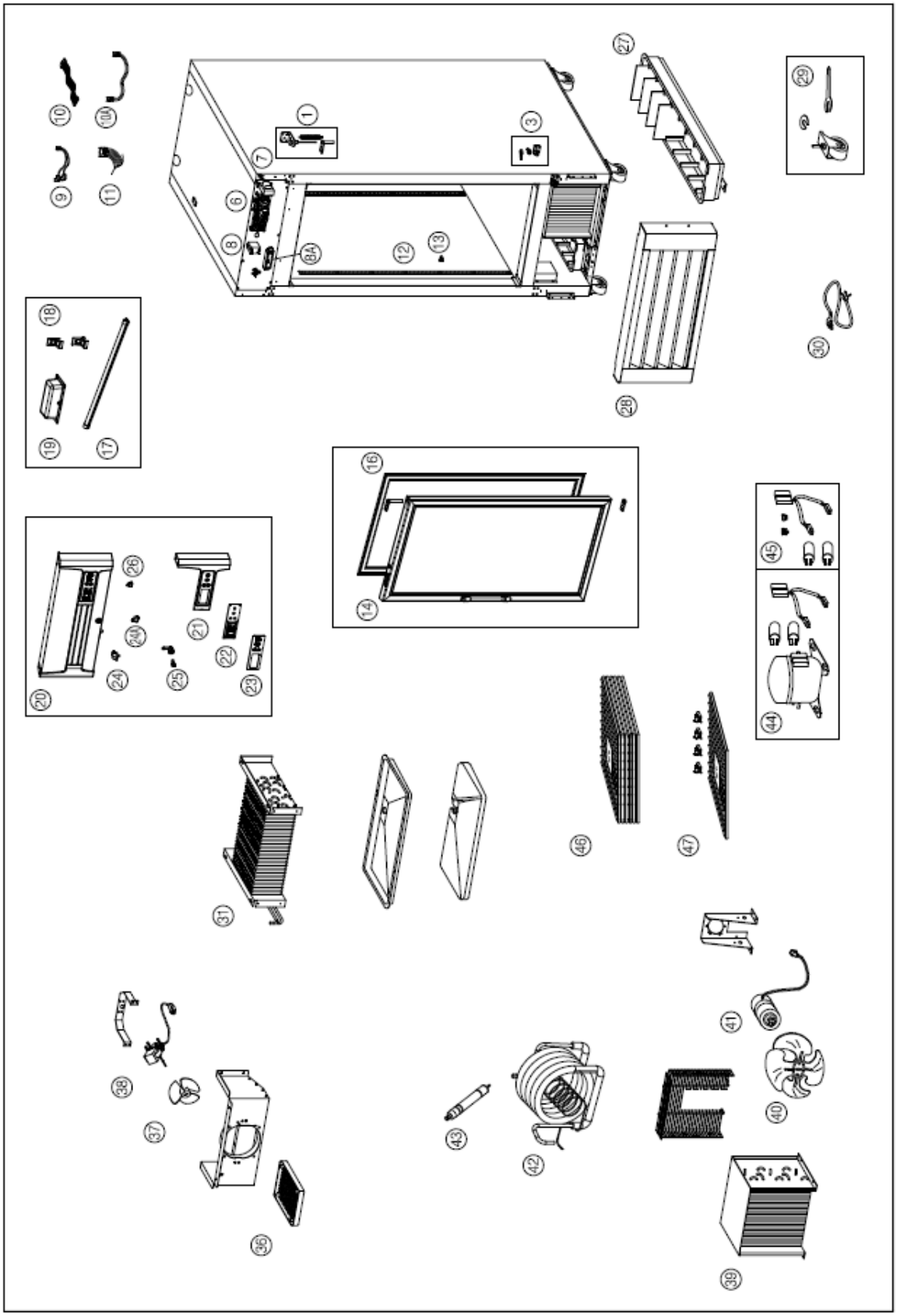

3-3. R49-G EXPLODED VIEW

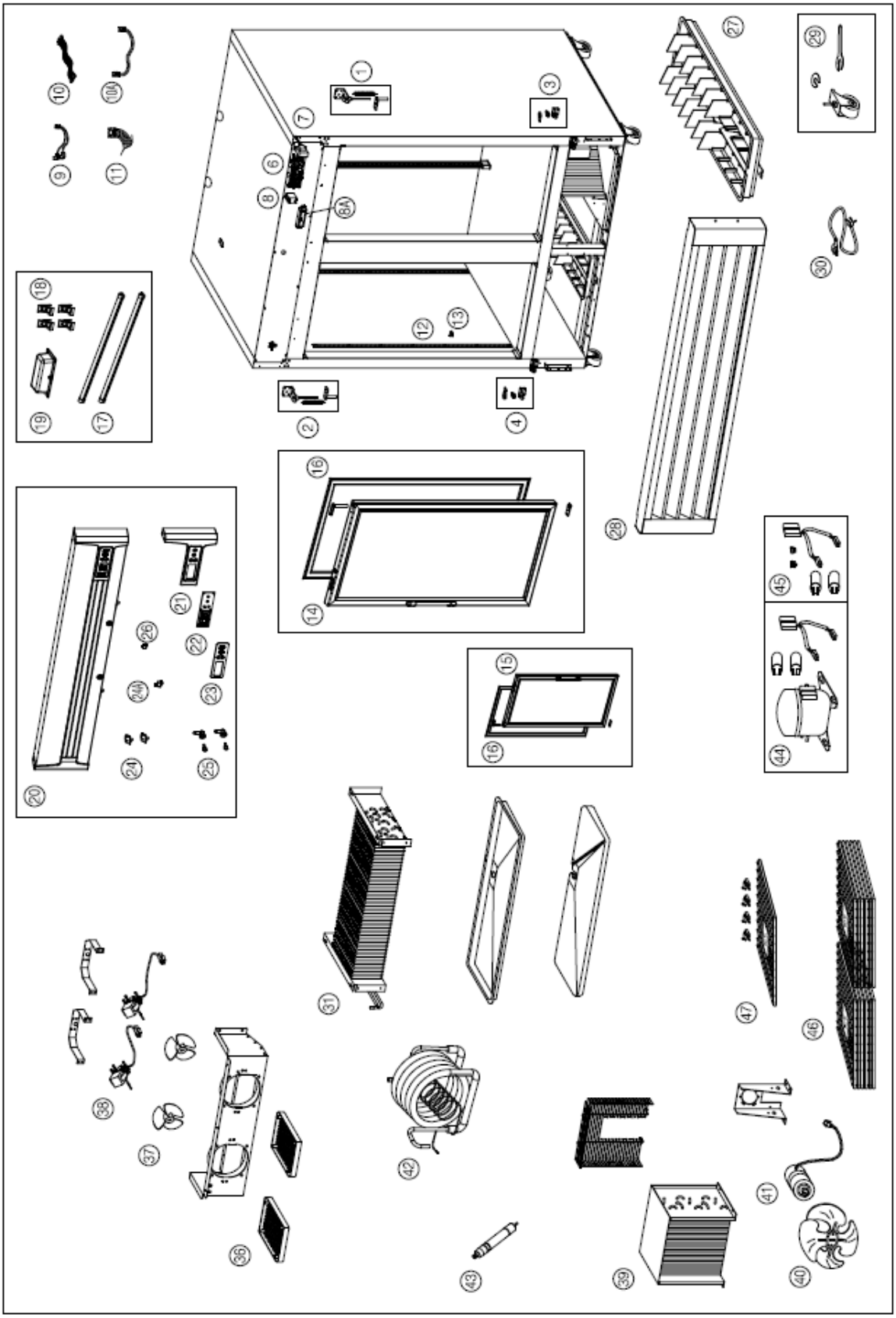

3-4. R72-G EXPLODED VIEW

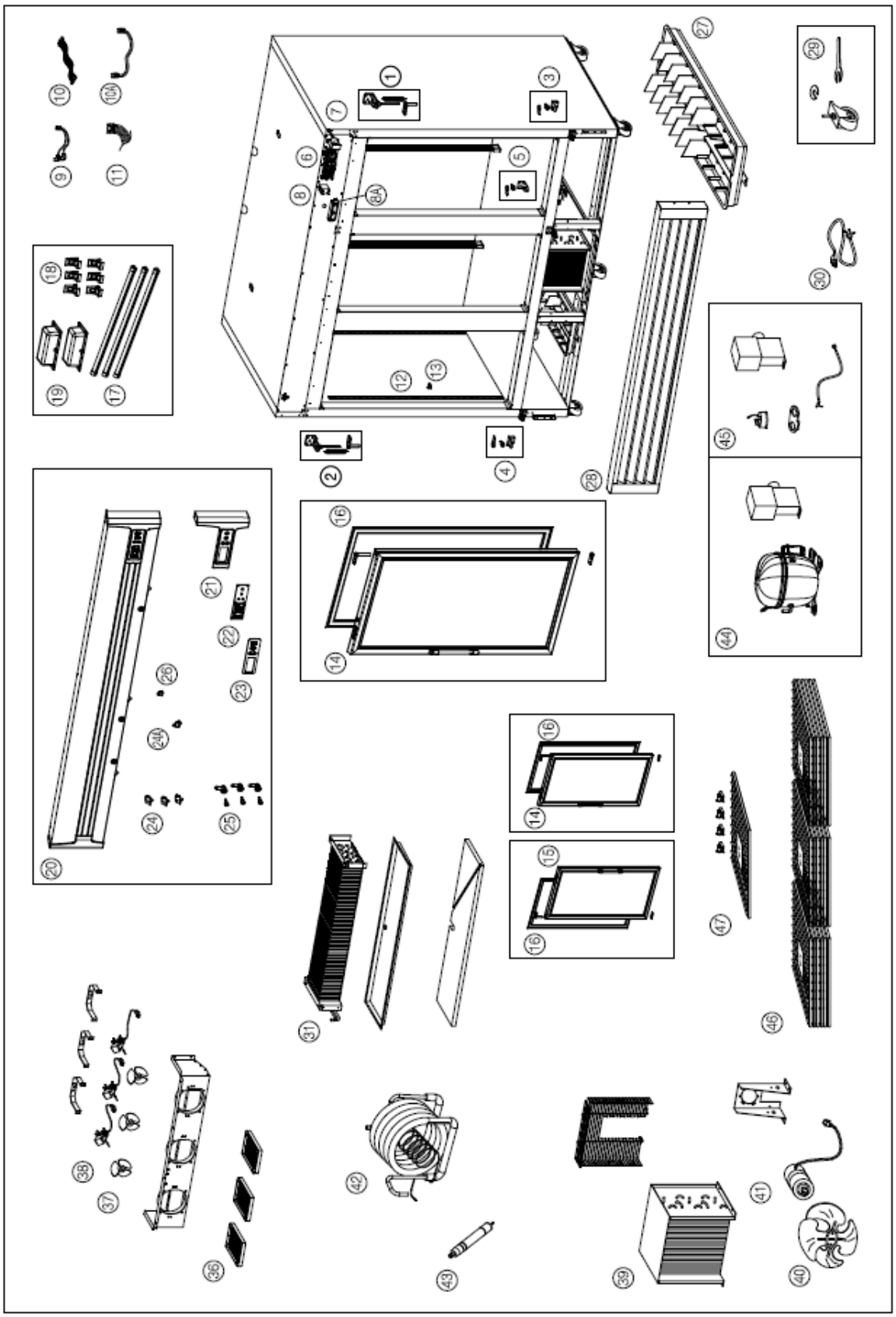

2. MERCHANDISERS

1-1. SERVICE LIST (GR26H, GR48S, GR70H)

No.	PART NAME	PART No.		
		GR26H	GR48S	GR70H
1	Door Hinge Kit - Top Right	146481	NA	160515
2	Door Hinge Kit - Top Left	NA	NA	160516
3	Door Hinge Kit - Lower Right	146471	NA	160517
4	Door Hinge Kit - Lower Left	NA	NA	160518
5	Door Hinge Kit - Lower Center	NA	NA	160519
6	Ballast	146491	146491	NA
7	Pilaster	146470	146470	146411
8	Shelf Clip	146489	146489	146489
9	Door Assembly - Right Hand	146478	146477	161582
10	Door Assembly - Left Hand	NA	146480	161584
11	Door Gasket	146483	NA	146482
12-1	Advertising Panel Wire A	150190	150524	NA
12-2	Advertising Panel Wire B	NA	150525	NA
13-1	Interior Light Wire A	NA	150526	NA
13-2	Interior Light Wire B	NA	150527	NA
14	Lamp (115V)	146466 / 146467	146466	NA
15	Lamp Cover End	146468	146468	NA
16	Lamp Cover	146469	146469	NA
17	Advertising Panel - Blank	146495	146494	146493
18	Advertising Panel Frame	146497	NA	NA
19	Advertising Panel Frame-Left	NA	146505	146500
20	Advertising Panel Frame-Right	NA	146506	146501
21	Advertising Panel Frame-Bottom	NA	146503	146498
22	Advertising Panel Frame-Top	NA	146504	146499
23	Condensate Pan w/paper	146386	146460	146387
24	Lower Grille Assembly	146463	146462	146461
25	Foot Kit	146502	146502	146502

No.	PART NAME	PART No.		
		GR26H	GR48S	GR70H
26	Power Cord	146475	146475	138533
27	Evaporator Coil	146465	146464	161569
28	Evaporator Fan Guard	146405	146405	146405
29	Evaporator Fan Blade	146406	146406	146406
30	Evaporator Fan Motor	146407	146407	146407
31	Temperature Control	146474	146473	146472
32	Light Switch	146450	146450	146450
33	Capillary Tube	146458	NA	NA
34	Suction pipe(B) Assembly	146457	146456	161568
35	Dryer	146384	146384	161564
36	Condenser Coil	146372	146455	161567
37	Condenser Fan Blade	146371	146371	146371
38	Condenser Fan Moto	146370	146370	146370
39	Compressor	146452	146451	150556
40	Compressor Electrical Kit	146454	146453	150557
41	Shelf	146488	146486 / 146487	NA / NA
42	Shelf Kit(1Shelf + 4Clips)	146523	146521 / 146522	161586 / 161588
43	SMPS (60W)	NA	NA	161580
44	LED (20W)	NA	NA	161581
45	LED (6W)	NA	NA	160526
46	LED Fixture	NA	NA	160527
47	LED wire cover	NA	NA	160528

* Shelf: GR48S - 146486 (LEFT), 146487 (RIGHT)

* Shelf Kit: GR48S - 146521 (LEFT), 146522 (RIGHT)

GR70H - 161586 (ENDS), 161588 (CENTER)

* Cap. Tube: 161592(GR70H)

1-2. GR26H EXPLODED VIEW

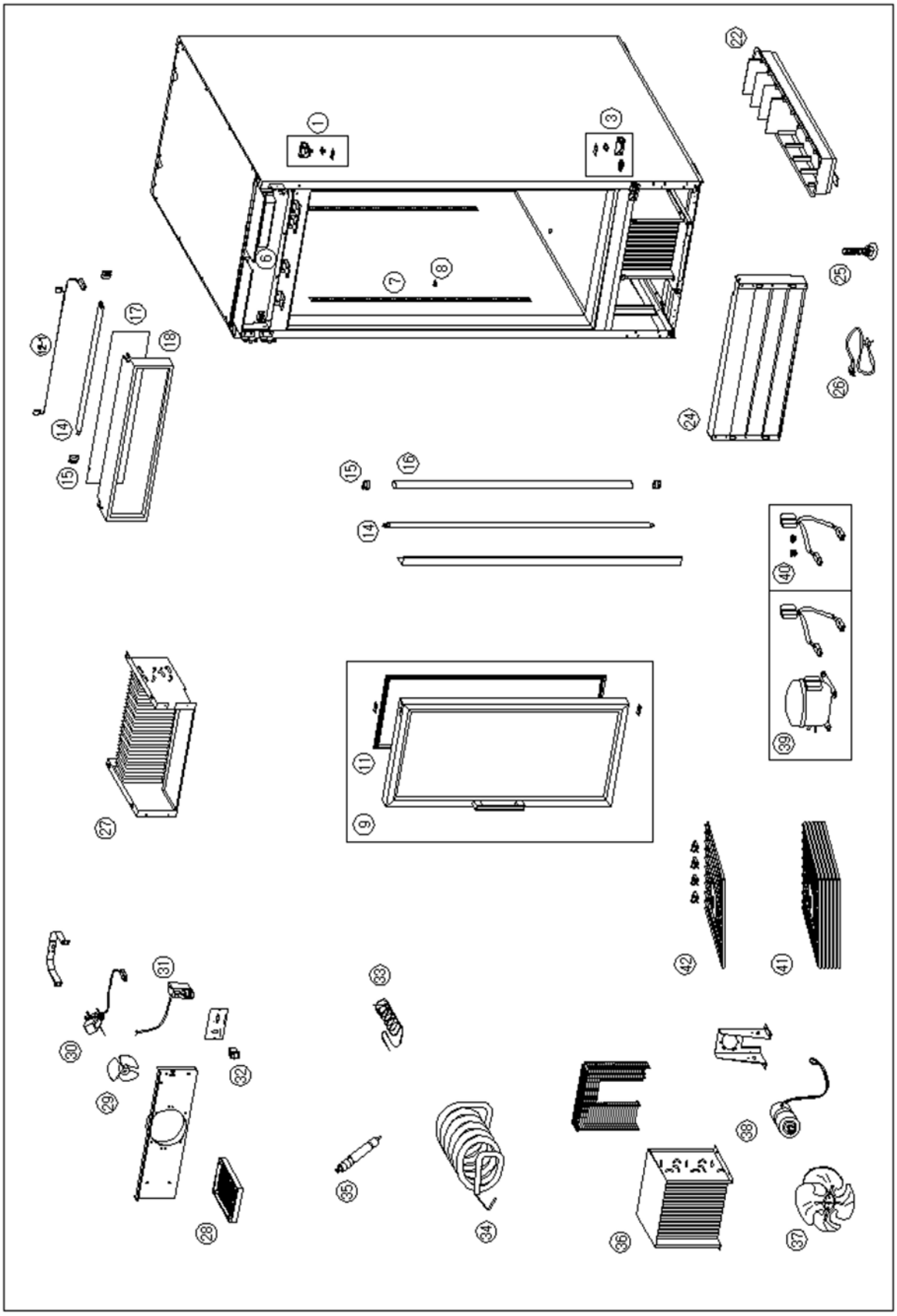

1-3. GR48S EXPLODED VIEW

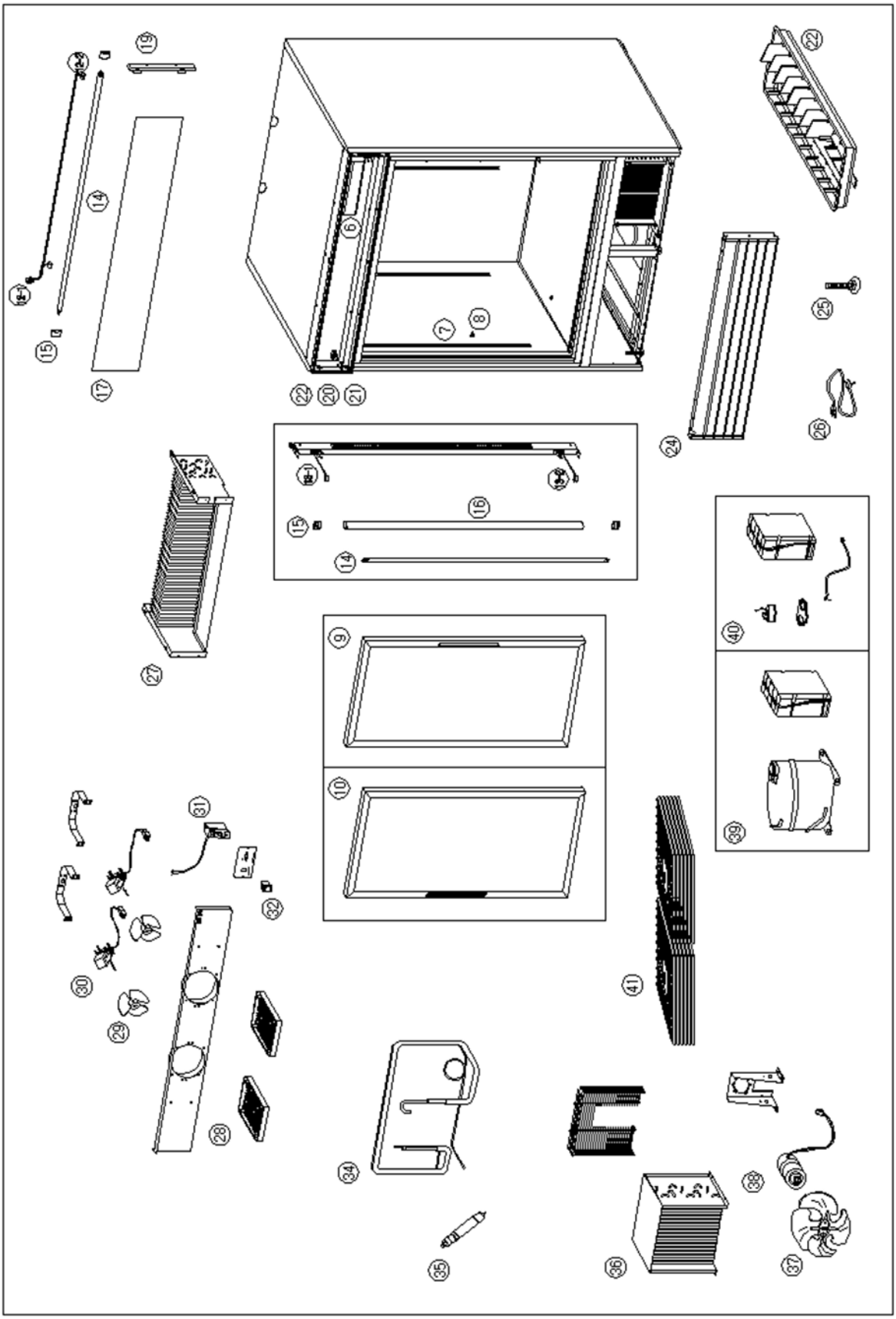

1-4. GR70H EXPLODED VIEW

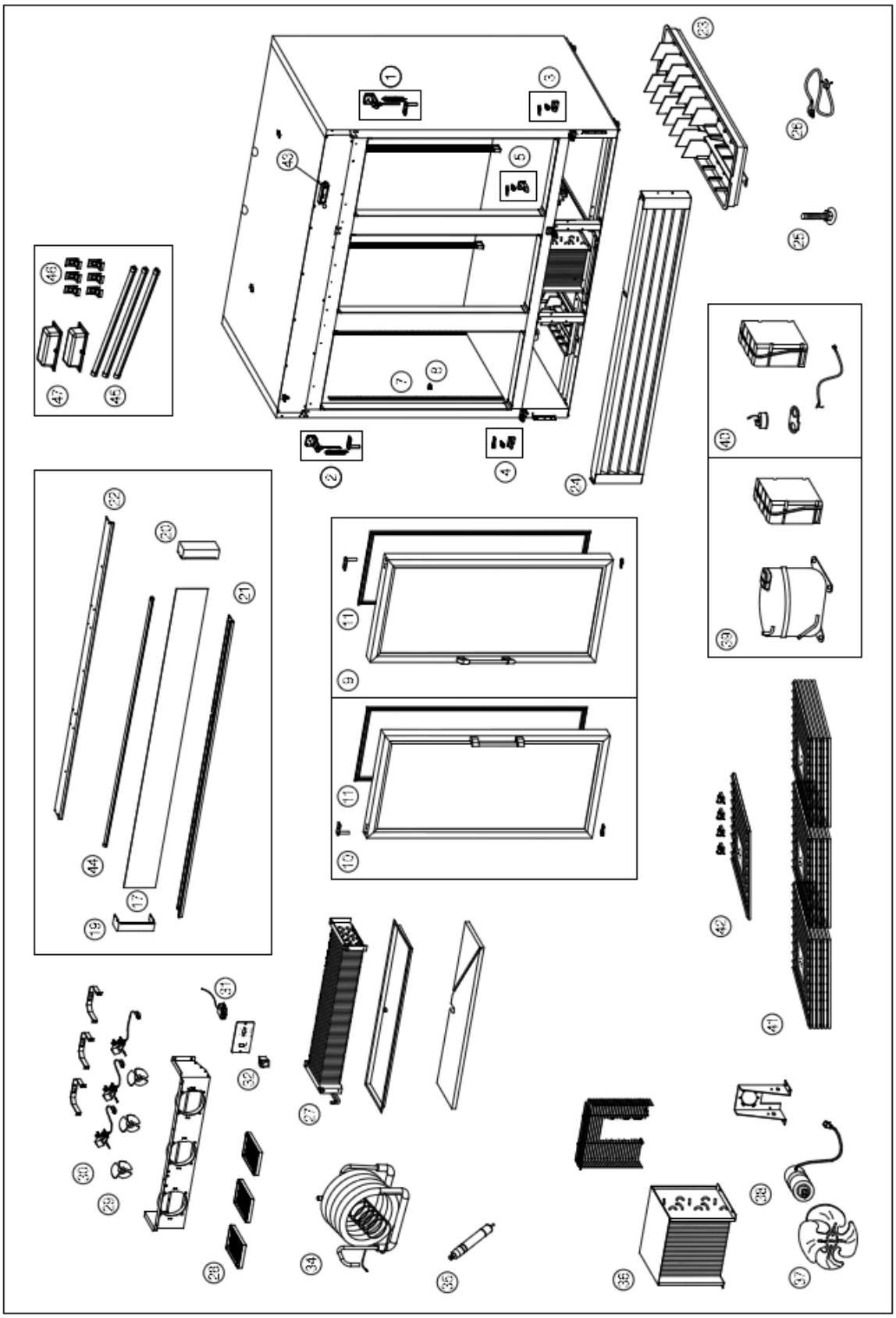

D. COMPRESSOR & ACCESSORIES CHECK LIST

1. F23-S/SH, R72-G, R72-S/SH, GR70H - D2

2. F49-S/SH - D3

3. F72-S/SH - D4

4. R23/R49-S/SH, R23/49-G - D5

5. GR26H - D6

6. GR48S - D7

1. F23-S/SH, , R72-S/SH/G, GR70H

① Compressor Spec. : NEK2150GK (R-404A), 115V/60Hz, CSR Type

② Maker : EMBRACO

③ Cooling Capacity : 628kcal/Hr - LBP

④ Starting Capacitor Spec. : 189~227 ㎌ / 165V

⑤ Running Capacitor Spec. : 25 ㎌ / 400V

⑥ Relay Spec. : RVA9AD3C-121

⑦ O.L.P Spec. : T0873/G9

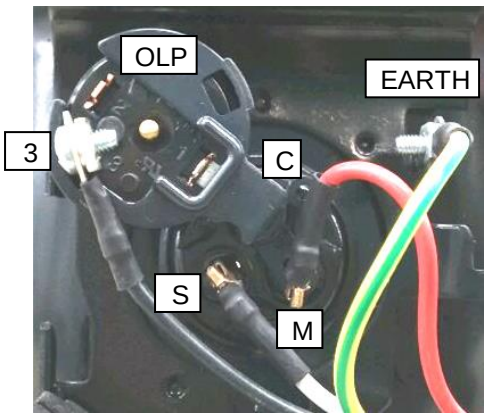

* Comp. Winding Resistance: C - M → 0.77Ω, C - S → 4.5Ω (RT 25℃(77˚F))

* O.L.P Winding Resistance: 3- C → 0 Ω (OK), ∞ Ω (NG)

* Relay Winding Resistance: 1 -2 → 0 Ω (OK), ∞ Ω (NG)

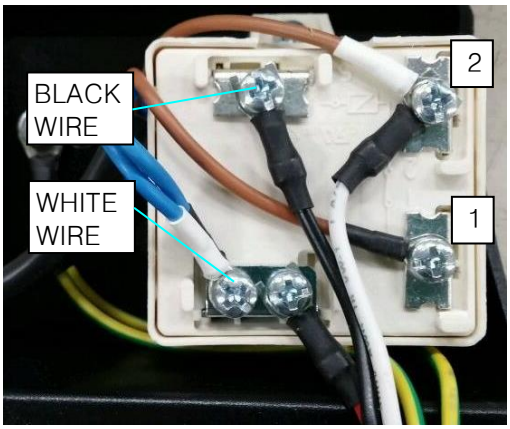

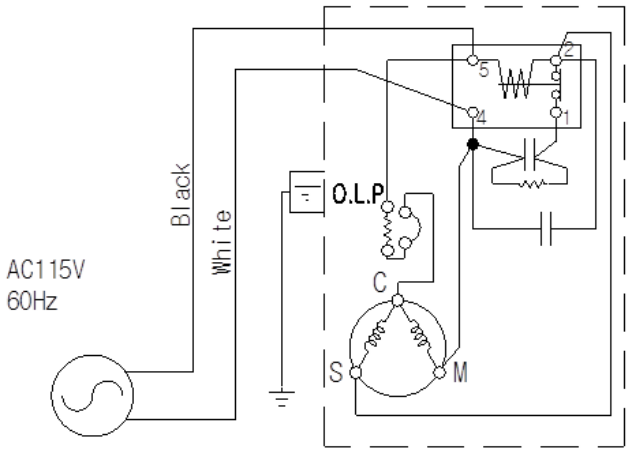

< COMP. Wiring Diagram>

2. F49-S/SH

① Compressor Spec. : NT2178GKV (R-404A), 115V/60Hz, CSR Type

② Maker : EMBRACO

③ Cooling Capacity : 903kcal/Hr - LBP

④ Starting Capacitor Spec. : 243~292 ㎌ / 165V

⑤ Running Capacitor Spec. : 35 ㎌ / 400V

⑥ Relay Spec. : RVA9AD3C-121

⑦ O.L.P Spec. : MST18RN-3041

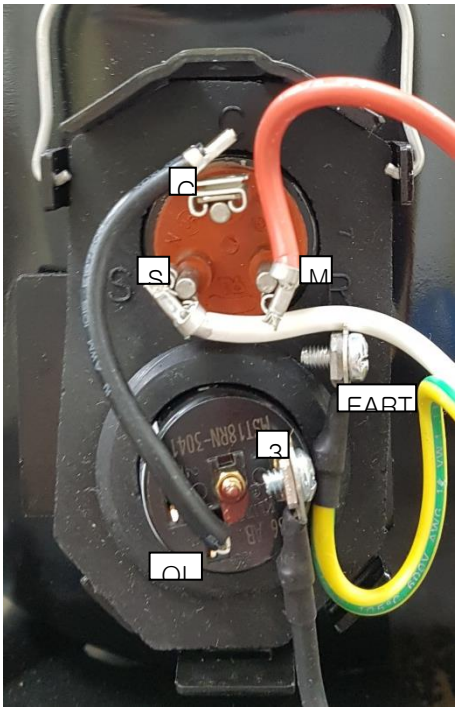

* Comp. Winding Resistance: C - M → 0.40Ω, C - S → 2.60Ω (RT 25℃(77°F))

* O.L.P Winding Resistance: 3 - C → 0 Ω (OK), ∞ Ω (NG)

* Relay Winding Resistance: 1 - 2 → 0 Ω (OK), ∞ Ω (NG)

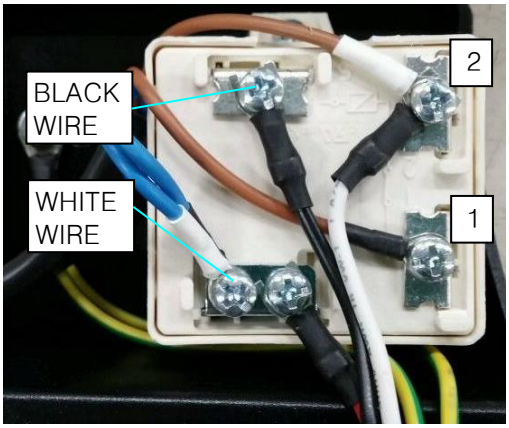

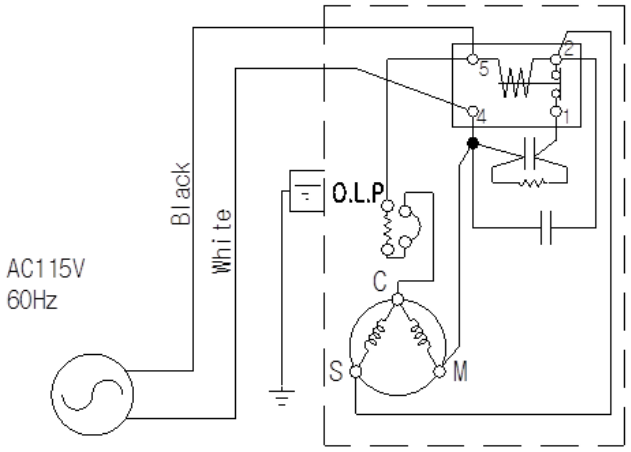

< COMP. Wiring Diagram>

3. F72-S/SH

① Compressor Spec. : NT2192GKV (R-404A), 115V/60Hz, CSR Type

② Maker : EMBRACO

③ Cooling Capacity : 1,051kcal/Hr - LBP

④ Starting Capacitor Spec. : 243~292 ㎌ / 165V

⑤ Running Capacitor Spec. : 35 ㎌ / 400V

⑥ Relay Spec. : RVA2AE3C-105

⑦ O.L.P Spec. : CRA1773-3029 GA3RMU0002

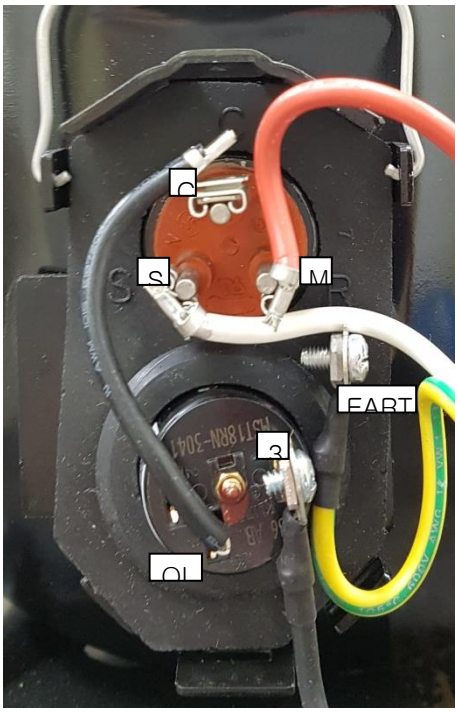

* Comp. Winding Resistance: C - M → 0.34Ω, C - S → 2.59Ω (RT 25℃(77˚F))

* O.L.P Winding Resistance: 3 - C → 0 Ω (OK), ∞ Ω (NG)

* Relay Winding Resistance: 1 - 2 → 0 Ω (OK), ∞ Ω (NG)

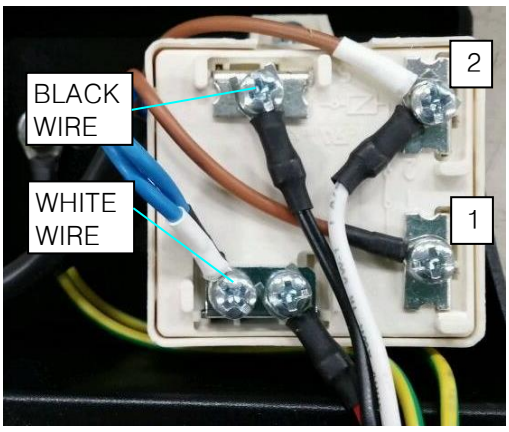

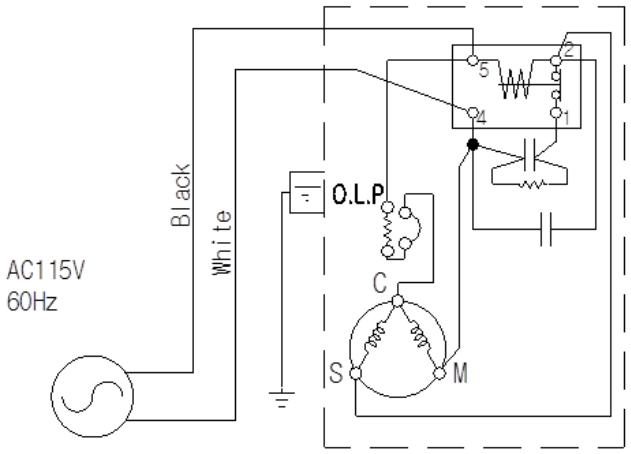

< COMP. Wiring Diagram>

4. R23/R49-S/SH, R23/R49-G

① Compressor Spec. : NW108LHB1 (R-134a), 115V/60Hz, CSR Type

② Maker : DAEWOO-KOREA

③ Cooling Capacity : 325kcal/Hr - LBP

④ Starting Capacitor Spec. : 125 ㎌ / 200V

⑤ Running Capacitor Spec. : 16 ㎌ / 250V

⑥ Relay Spec. : R6R8MD22SS

⑦ O.L.P Spec. : 4TM801SFBZZ-52

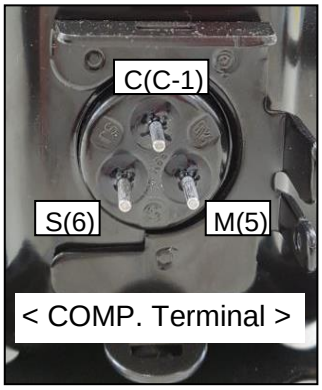

< COMP. Terminal >

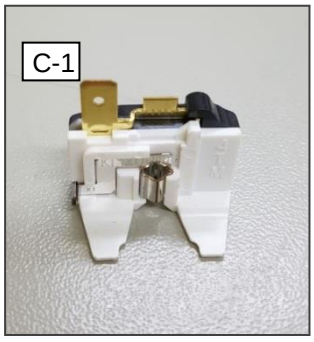

< OLP >



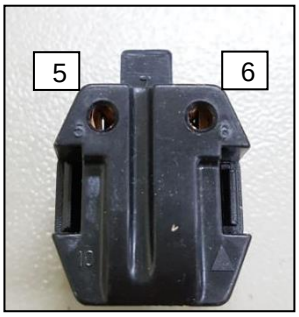

< RELAY >

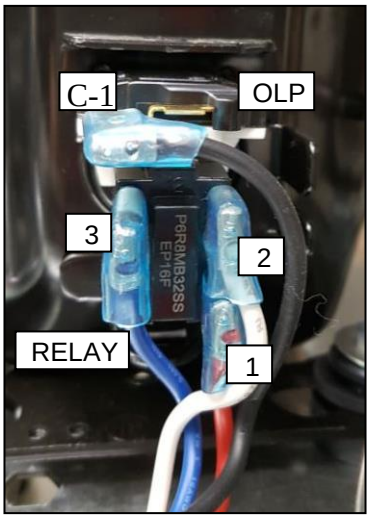

CSR Type

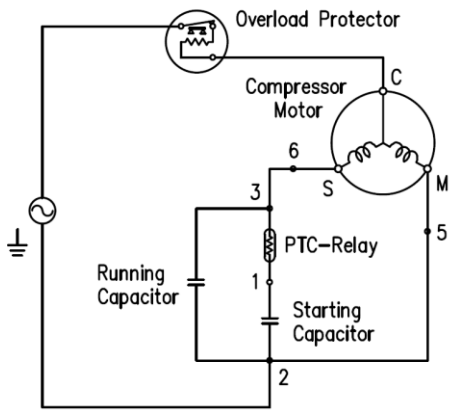

< COMP. Wiring Diagram>

* Comp. Winding Resistance: C - M → 1.20Ω, C - S → 6.18Ω(RT 25℃,77°F)

* O.L.P Winding Resistance: 1 - 1-1 → 0 Ω (OK), ∞ Ω (NG)

On/Off Temperature - O/T: 135 ℃, C/T: 61℃

* Relay Winding Resistance: M (5) – C-1 → 0 Ω (OK), ∞ Ω (NG)

S (6) – C-1 → ∞ Ω (OK)

* PTC: 6.8Ω

6. GR26H

① Compressor Spec. : SK182C-L2U (R-134a), 115V/60Hz, RSCR Type

② Maker : SAMSUNG-KOREA

③ Cooling Capacity : 243kcal/Hr - LBP

④ Relay Spec. : PTHAR-T4R7M180D/J531Q32E4R7M1802

⑤ O.L.P Spec. : 4TM444NHBYY-53

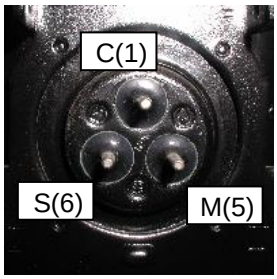

< Comp. Terminal >

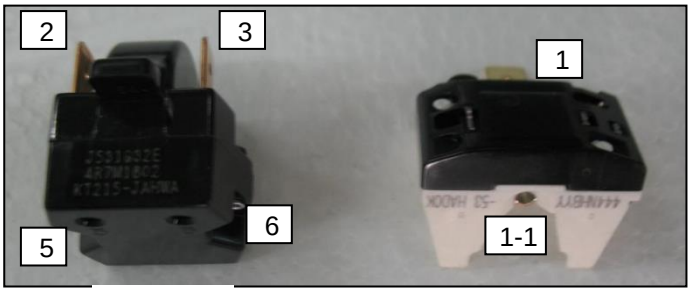

< RELAY < OLP >

* Comp. Winding Resistance: C - M → 2.3Ω, C - S → 3.8Ω (RT 25℃(77˚F))

* O.L.P Winding Resistance: 1 - 1-1 → 0 Ω (OK), ∞ Ω (NG)

* Relay Winding Resistance: 5 - 6 → 0 Ω (OK), ∞ Ω (NG)

2 - 3 → 0 Ω (OK), ∞ Ω (NG)

* Measuring the resistance, the bottom of the relay must be downward (like fig.1)

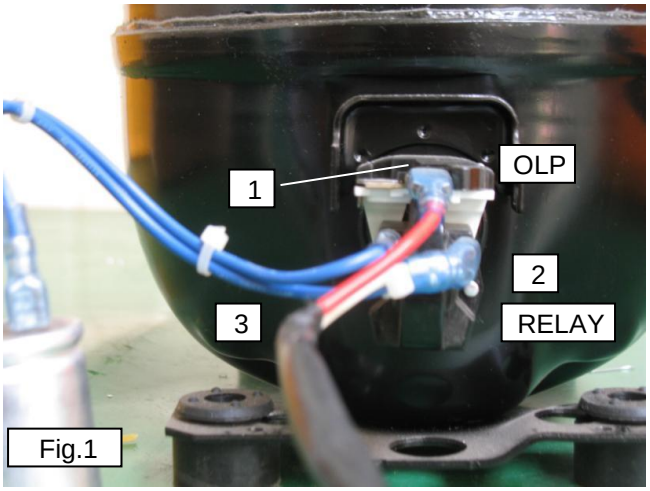

Fig.1

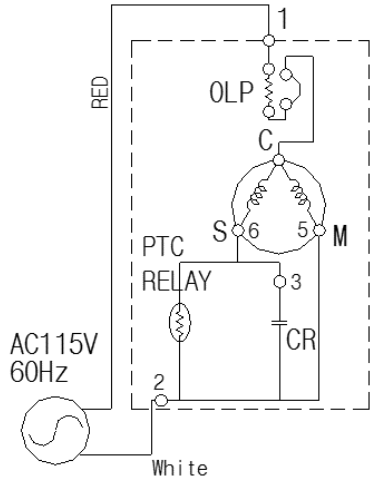

< COMP. Wiring Diagram>

7. GR48S

① Compressor Spec. : CAJ4476Y (A) (R-134a), 115V/60Hz, CSIR Type

② Maker : TECUMSEH-FRANCE

③ Cooling Capacity : 1,946kcal/Hr - HBP

④ Starting Capacitor Spec. : 250 ㎌ / 160V

⑤ Relay Spec. : 3ARR3*2M*

⑥ O.L.P Spec. : CRA38014

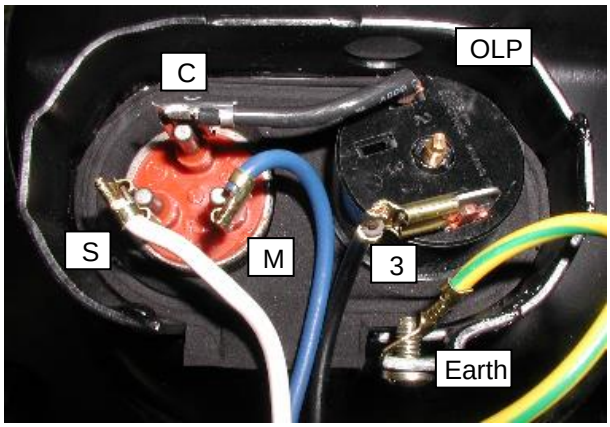

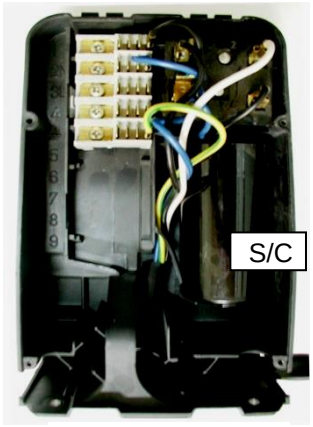

< RELAY BOX >

* Comp. Winding Resistance: C - M → 0.72Ω, C - S → 3.68Ω (RT 20℃(68˚F))

* O.L.P Winding Resistance: 3 - C → 0 Ω (OK), ∞ Ω (NG)

* Relay Winding Resistance: 1 - 2 → 0 Ω (OK), ∞ Ω (NG)

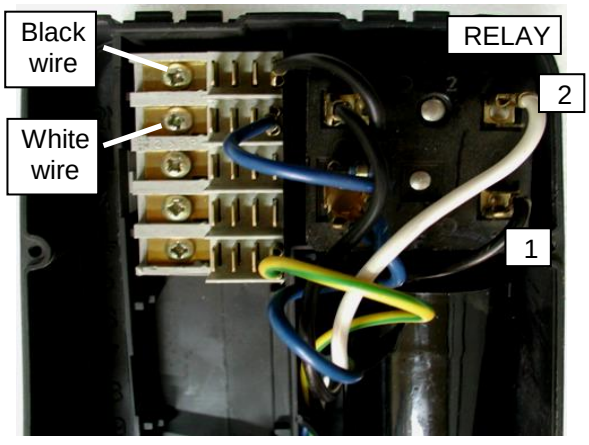

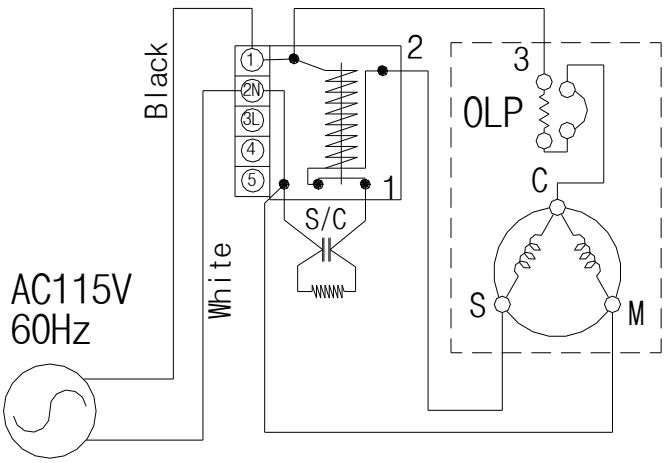

< COMP. Wiring Diagram>