Miele

Operating and Installation Instructions
Fridge-freezer Combination



To prevent accidents and machine damage, read these instructions **before** installation or use.

en-US, CA

M.-Nr. 11 508 680

Contents

IMPORTANT SAFETY INSTRUCTIONS 6

Caring for the environment 16

Installation 17
Installation location 17
Climate class 17
Installation notes 18
Adjoining cabinetry/units 18
Load-bearing capacity of the niche floor 19
Ventilation 19
Door hinge 19
Side-by-side 20
Specifications for the plumbed water connection 21
Installation dimensions 22
Position of the electrical and plumbed water connections 22
Dimensions with appliance door open (opening angle 90°/115°) 25
Building in the appliance 26
Before starting... 26
Tools required 26
Aligning the installation niche 27
Checking the installation niche 27
Before installation 28
Preparing the installation niche 29
Pushing the appliance into the niche 31
Aligning the refrigeration appliance 33
Securing the appliance in the niche 35
Securing the toe-kick board and cover 36
Aligning the appliance doors 37
Limiting the opening angle of the appliance door 40
Water connection 41
Information on the fresh water connection 41
Installing the water hose to the appliance 42
Electrical connection 43

Saving energy 45

Guide to the appliance 47
Main screen 49
Settings mode 50

Accessories 52
Accessories supplied 52
Optional accessories 52

Contents

Before first use 54
Choosing the right Door Assistant (Push2Open/Pull2Open) 54
Inserting the Active AirClean filters 55
Miele@home 55
Operating the refrigeration appliance 56
Starting up for the first time 57

Switching on and off 58
Switching off for longer periods of time 59

Selecting additional settings 60
Switching Keypad Lock on or off 60
Switching Eco Mode on or off 61
Performing a Self Test 62
Switching on the Door Assistant 63
Switching off the Door Assistant 64
Miele@home 65
Switching off Demo Mode 66
Resetting the settings to their default settings 67
Switching Vacation mode on or off 69
Switching Sabbath Mode on or off 70
Switching on, switching off, or resetting the Water Filter Display 71
Switching on, switching off, or resetting the Display Active AirClean Filter ... 73

The correct temperature 75
... in the fridge zone and in the MasterFresh zone 75
Automatic cold air circulation (DynaCool) 75
... in the Freezer Zone 76
Setting the temperature 76
Temperature range 76

Using Automatic SuperCool and SuperFreeze 77

Temperature and door alarm 80

Adjusting the interior fittings 82
Removing or moving the door shelves 82
Removing or moving the shelves 82
Removing the hanging drawer 83
Removing compartments from the Fridge Zone 84
Removing the freezer baskets 84
Removing the dividing panel (depending on the model) 85
Removing the ice cube tray 85

Contents

Storing food in the refrigerator section ... 86
Different storage zones ... 86
Food which is not suitable for storage in the fridge zone ... 87
Notes on buying food ... 88
Storing food correctly ... 88

Storing food in the MasterFresh zone ... 89
MastertFresh zone ... 89
Humidity-controlled compartment with moisture adjustment ... 89
Dry compartment with low temperature ... 91

Freezing and storing food ... 93
Maximum freezing capacity ... 93
What happens when you freeze fresh food? ... 93
Storing frozen food ... 94
Home freezing ... 94
Before placing food in the freezer ... 95
Placing food in the freezer ... 96

Making ice cubes ... 98

Automatic defrosting ... 100

Cleaning and care ... 101
Cleaning agents ... 101
Before cleaning the appliance ... 102
Interior and accessories ... 102
Cleaning the door seal ... 103
Cleaning the ventilation gaps ... 103
Cleaning the water filter (IntensiveClear 2.0 mesh filter) (see “Optional accessories”) ... 104
Replacing the Active AirClean filters ... 105
After cleaning ... 106

Water filter ... 107
Changing the water filter ... 108
Using an external water filter ... 109
Lead-free certificate ... 112

Frequently Asked Questions ... 113

Causes of noises ... 123

Customer Service ... 124
Contact in the event of a fault ... 124

Contents

Appliance warranty and product registration 124

Declaration of conformity 125

Copyrights and licenses 126

IMPORTANT SAFETY INSTRUCTIONS

This refrigeration appliance complies with current safety requirements. Inappropriate use can, however, lead to personal injury and material damage.

Please read the operating and installation instructions carefully before using the refrigeration appliance for the first time. They contain important information on safety, installation, use, and maintenance. This is to protect yourself from injury, and from damaging your refrigeration appliance.

In accordance with standard IEC 60335-1, Miele expressly and strongly advises that you read and follow the instructions in the chapter on installing the refrigeration appliance as well as in the “IMPORTANT SAFETY INSTRUCTIONS”.

Miele cannot be held liable for injury or damage caused by non-compliance with these instructions.

Keep these instructions in a safe place and pass them on to any future owner.

⚠ Risk of injury and damage due to tipping refrigeration appliance.

This refrigeration appliance is very heavy and can tip forwards when the doors are open.

Keep the appliance doors shut until the refrigeration appliance has been built in and secured in its housing in accordance with the Operating and Installation Instructions.

Appropriate use

▶ This appliance is intended for use in domestic households and similar residential environments such as
– staff kitchen areas in shops, offices and other working environments
– farm houses and by clients in hotels, motels and other residential type environments
– bed and breakfast type environments
– catering and similar non-retail applications.
This appliance is not intended for use outdoors, in damp environments or in places exposed to rain.

▶ This appliance is intended for domestic use only for cooling and storing food and drink as well as for storing deep frozen food, freezing fresh food and for making ice.
Any other usage is not supported by the manufacturer and could be dangerous.

▶ This refrigeration appliance is not suitable for storing and keeping cool medicines, blood plasma, laboratory preparations, or other similar substances or products that are subject to the Medical Device Directive. Incorrect use of the refrigeration appliance for such purposes may cause deterioration of the items stored. The refrigeration appliance is also not suitable for use in areas where there is a risk of explosion.
Miele cannot be held liable for damage resulting from incorrect or improper use or operation.

▶ This refrigeration appliance may only be used by people (including children) with reduced physical, sensory, or mental capabilities or lack of experience and knowledge if they are supervised while using it.
The refrigeration appliance may only be used by these people without supervision if they have been shown how to use it in a safe way and recognize and understand the consequences of incorrect operation.

IMPORTANT SAFETY INSTRUCTIONS

Safety with children

▶ To reduce the risk of injury, do not allow children to play in, on or near the appliance.

▶ Risk of death. Please bear in mind that by removing the dividing panel in the large freezer basket, children may be tempted to climb inside.

▶ The door hinges can cause injury. Keep children well away at all times.

▶ Ensure that any packing material is disposed of safely and kept out of the reach of children. DANGER of suffocation!

Technical safety

▶ The coolant circuit has been checked for leaks. The refrigeration appliance complies with statutory and regulatory requirements.



▶ This refrigeration appliance contains the coolant Isobutane (R600a), a natural gas which is environmentally friendly. Although it is combustible, it does not damage the ozone layer and does not contribute to the greenhouse effect.
The use of this coolant has, however, led to a slight increase in the noise level of the appliance. In addition to the noise of the compressor, you might be able to hear the coolant flowing around the cooling circuit. Unfortunately, this cannot be avoided, but it does not affect the performance of the refrigeration appliance.
When transporting and installing the refrigeration appliance, ensure that no parts of the cooling circuit are damaged. Splashes of coolant can damage the eyes.
In the event of damage:

- Avoid open flames or anything which creates a spark.
- Disconnect the refrigeration appliance from the power supply.
- Ventilate the room where the refrigeration appliance is located for several minutes.
- Contact Miele Customer Service.

▶ The more coolant there is in a refrigeration appliance, the larger the room it should be installed in. In the event of a leakage, if the appliance is in a small room, there is the danger of a combustible gas/air mixture building up. For every 11 g of coolant, at least 1 m^3 of room space is required. The amount of coolant in the refrigeration appliance is stated on the data plate inside the appliance.

IMPORTANT SAFETY INSTRUCTIONS

▶ To avoid the risk of damage to the appliance, make sure that the connection data (fuse rating, frequency and voltage) on the data plate corresponds to the household supply.
Check that this is the case before connecting the appliance. Consult a qualified electrician if in any doubt.

▶ The electrical safety of the appliance can only be guaranteed when correctly grounded. It is essential that this standard safety requirement is met. If in any doubt please have the electrical installation tested by a qualified electrician.

▶ Reliable and safe operation of this appliance can only be assured if it has been connected to the electricity supply.

▶ The outlet must not be concealed behind the appliance and must be easily accessible so that the appliance can be quickly disconnected from the electrical supply in case of an emergency.

▶ If the power cord supplied is damaged, it must only be replaced by an original part to prevent a hazard for the user. Miele can only guarantee the safety of the appliance when original Miele parts are used.

▶ The electrical outlet must be properly grounded.

▶ Do not connect the appliance to the electrical supply with a power bar or extension cord. These are a fire hazard and do not guarantee the required safety of the appliance.

▶ If moisture gets into electrical components or into the power cord, it could cause a short circuit. Therefore, do not operate the machine in areas where there may be moisture or splashing water (e.g., garages, laundry rooms).

▶ This appliance must not be installed and operated in mobile installations (e.g. on a ship).

▶ Do not use a damaged appliance. It could be dangerous. Check the appliance for visible signs of damage.

▶ For safety reasons, this appliance may only be used after it has been built in.

▶ The machine must be disconnected from the power supply during installation, maintenance, and repair work, and installation work on the fresh water connection. The machine is only completely isolated from the power supply when:

- the fuses have been switched off, or
- the circuit breaker has been removed completely, or
- the power cord has been unplugged. Pull on the plug and not on the power cord when disconnecting it from the power supply.

▶ Unauthorized installation, maintenance, and repairs, or a faulty fresh water connection can cause considerable danger for the user. Installation, maintenance, and repairs, installation work on the fresh water connection, and all repairs on the ice/water outlet must only ever be carried out by a Miele authorized technician.

▶ Any manufacturer's warranty will be void if the appliance is not repaired by a Miele approved service technician.

▶ Faulty components must only be replaced by genuine Miele replacement parts. Miele can only guarantee the safety standards of the appliance when Miele replacement parts are used.

▶ Miele cannot be held liable for damage caused by a faulty connection to the fresh water supply.

▶ The ice cube maker must only be connected to a cold water line.

▶ DANGER of injury! Never tamper with the movable components on the ice cube maker or the element on the ice cube maker.

IMPORTANT SAFETY INSTRUCTIONS

Correct use

▶ The refrigeration appliance is designed for use within a specific climate class (room temperature range). Do not use in a climate class for which it is not designed. A lower room temperature will cause the compressor to switch off for longer periods, meaning that the refrigeration appliance is unable to maintain the required temperature.

▶ WARNING! DANGER of overheating! Do not cover or block the air vents. This can impair the efficiency of the appliance, increase the power consumption and cause damage to the appliance.

▶ If storing food which contains a lot of fat or oil in the appliance, make sure that it does not come into contact with plastic components as this could cause stress cracks or break the plastic.

▶ Risk of fire and explosion. Do not store any explosive materials or products containing flammable propellants (e.g., spray cans) in the appliance. Electrical components can cause flammable mixes of gases to ignite.

▶ Risk of explosion. Do not operate any electrical equipment (e.g., an electric ice-cream maker) inside the refrigeration appliance. Risk of sparking and explosion.

▶ Risk of injury and damage. Do not store cans or bottles containing carbonated drinks or liquids which could freeze in the freezer zone. Otherwise they could burst.

▶ Risk of injury and damage. When chilling drinks in the freezer zone, make sure that bottles are not left in for more than one hour. Otherwise they could burst.

▶ Risk of injury. Never handle frozen food or the metal parts of the appliance with wet hands. Your hands may freeze to the frozen food or to the metal.

▶ Risk of injury. Do not take ice cubes out with your bare hands and never place ice cubes or ice pops in your mouth straight from the freezer section. The very low temperature of the frozen food can cause frost burn to the lips and tongue.

▶ Do not refreeze partially or fully defrosted food. Consume defrosted food as soon as possible, as it will lose its nutritional value and spoil if left for too long. Defrosted food may only be refrozen after it has been cooked.

▶ When eating stored food, there is a danger of food poisoning. Storage times will depend on several factors, including the freshness and quality of the food, as well as the temperature at which it is stored. Observe the manufacturer's “use-by” dates and storage instructions.

▶ Use only genuine original Miele parts. If parts or accessories from other manufacturers are used, the warranty may become invalid.

Stainless steel machines:

▶ Adhesives will damage the coated stainless steel surface and cause it to lose its dirt-repellent protective coating. Do not use sticky notes, transparent adhesive tape, masking tape, or other types of adhesive on the stainless steel surface.

▶ The surface is easily scratched. Even magnets can cause scratching.

IMPORTANT SAFETY INSTRUCTIONS

Cleaning and maintenance

▶ Do not use any oil or grease on the door seals.
They can cause the seals to deteriorate over time.

▶ Never use a steam cleaner to clean the appliance.
The steam can reach the electrical components and cause a short circuit.

▶ Sharp edged or pointed objects will damage the evaporator, causing irreversible damage to the appliance. Do not use sharp edged or pointed objects to

- remove frost or ice,
- separate frozen foods or remove ice trays.

▶ Never place electric heaters or candles in the appliance to defrost it. These can damage the plastic parts.

▶ Do not use defrosting sprays or de-icers, as they could contain substances which could damage the plastic parts or which might cause the build-up of gases and pose a danger to health.

Transport

▶ To avoid damage to the appliance, always transport it upright and in its packaging.

▶ Risk of injury and damage. The refrigeration appliance is very heavy and must be transported by two people.

Disposal of your old appliance

▶ Children could become trapped in the machine and could suffocate.

- Remove the machine doors.
- Remove the drawers.
- Leave the adjustable shelves in the machine so children cannot climb inside.

▶ DANGER of electric shock!

- Cut the plug off the power cord.
- Cut the power cord off the old appliance.

▶ Dispose of them separately from the appliance.

▶ Ensure that the appliance is not stored in the vicinity of gasoline or inflammable gases and liquids during and after disposal.

▶ Make sure that the coolant pipework is not damaged during disposal to avoid uncontrolled leakage of oil and coolant (see data plate for coolant type).

▶ Splashes of coolant can cause damage to the eyes. Be careful not to damage any part of the pipework while awaiting disposal, e.g. by

- puncturing the coolant channels in the evaporator,
- kinking any pipework,
- scratching the surface coating.

Caring for the environment

Disposal of packaging material

The packaging is designed to protect the appliance from damage during transportation. The packaging materials used are selected from materials which are environmentally friendly for disposal and should be recycled.

Ensure that any plastic wrappings, bags, etc. are disposed of safely and kept out of the reach of children. Return the packaging to your dealer.

Disposing of your old appliance

Electronic and electrical appliances contain many valuable materials. They also contain certain materials, compounds, and components which were essential for their correct functioning and safety. These could be hazardous to your health and to the environment if disposed of with general waste or if handled incorrectly. Please do not, therefore, dispose of your old appliance with general waste.

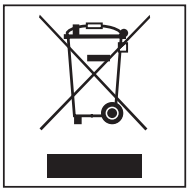

Instead, please make use of officially designated collection and disposal points to dispose of and recycle electrical and electronic appliances. By law, you are solely responsible for deleting any personal data from the appliance prior to disposal.

Take care not to damage your refrigeration appliance's pipework before or during transportation to an authorized collection depot.
This is to ensure that coolant in the cooling circuit and oil in the compressor is contained, and will not leak into the environment.

Please ensure that your old appliance poses no risk to children while being stored for disposal. For additional information, see "IMPORTANT SAFETY INSTRUCTIONS" in these operating and installation instructions.

Installation location

This appliance should be installed in a dry, well-ventilated room.

When deciding where to install your refrigeration appliance, please bear in mind that it will use more energy if installed near to a heater, a range, or another appliance that gives off heat. Direct sunlight should also be avoided. The higher the room temperature, the longer the compressor runs and the higher the energy consumption of the refrigeration appliance.

When installing the refrigeration appliance, please note the following:

- The electrical socket must be easily accessible in an emergency and not concealed behind the appliance.
- The plug and power cord must not touch the rear of the refrigeration appliance as they could be damaged by vibrations from the appliance.
- Do not plug in other appliances behind the refrigeration appliance.

If installation near a heat source is unavoidable, observe the following minimum distances between the appliance and the heat source:

- At least 1 1/4" (3 cm) to electric or gas stoves
- At least 11 3/4" (30 cm) to oil or coal-based stoves

If it is not possible to observe these minimum distances, an isolation plate must be installed between the refrigeration appliance and the heat source.

Climate class

The refrigeration appliance is designed for use within the climate class (room temperature range) SN-T. Do not use in a climate class for which it is not designed.

Climate class	Room temperature
SN	50°F to 90°F / 10°C to 32°C
N	60°F to 90°F / +16°C to +32°C
ST	60°F to 100°F / +16 to +38°C
T	60°F to 109°F / +16 to +43°C

A lower room temperature will cause the compressor to switch off for longer periods. This can cause the internal temperature in the refrigeration appliance to rise with the risk of food deteriorating and going off.

⚠ Risk of damage due to high humidity.

In environments with high humidity, condensation can build up on external refrigeration appliance panels, which can cause corrosion.

Install the refrigeration appliance in a dry and/or air-conditioned room with sufficient ventilation.

After installation, make sure that the appliance doors close properly, the ventilation gaps are not covered, and the refrigeration appliance has been installed in accordance with these operating and installation instructions.

Installation notes

⚠ Risk of damage and injury due to the refrigeration appliance tipping over.

This refrigeration appliance is very heavy and can tip forwards when the appliance door(s) is (are) open.

Keep the appliance door(s) shut until the refrigeration appliance has been built in and secured in its housing in accordance with these operating and installation instructions.

Due to its weight and size, the refrigeration appliance must be installed by two people.

Adjoining cabinetry/units

The appliance is screwed to the adjoining cabinetry/units to the side and above. For this reason, it is essential that all cabinets/units are fixed to the ground and/or wall.

Load-bearing capacity of the niche floor

To ensure the safe installation of the refrigeration appliance and to guarantee its correct functioning, the floor of the niche where the appliance is to be installed must be smooth and even.

It must be made from strong, rigid material.

Because the refrigeration appliance is extremely heavy when fully loaded, it is essential that the floor it stands on is able to bear its weight. If necessary, seek the advice of an architect or construction expert.

When fully loaded, the weight of the refrigeration appliance is approx.:

KF 2802 SF, KF 2812 SF	906 lbs (411 kg)
KF 2902 SF, KF 2912 SF	1069 lbs (485 kg)

Ventilation

⚠ Risk of fire and damage due to insufficient ventilation.

If the refrigeration appliance is not ventilated sufficiently, the compressor will run more frequently and for longer periods.
This causes increased energy consumption and an increased compressor operating temperature, which can result in damage to the compressor.

Please ensure that there is adequate ventilation around the refrigeration appliance.

Do not block the ventilation gaps. The ventilation gaps must never be obstructed.

Door hinge

⚠ Risk of damage and injury when changing the door hinges.

Changing the door hinges single-handedly can cause damage to the appliance and injury.

The refrigeration appliance is supplied with a fixed hinge. On no account should you attempt to change the door hinge yourself.

If you need to change the door hinge to the other side, please contact the Miele Service department.

Side-by-side

This appliance can be installed side-by-side with another refrigeration appliance. The following overview will show you which side-by-side options you have with your appliance:

A side-by-side merging kit and a top frame (KTF) are required for this. Both are available from your Miele dealer or Miele Service.

Instructions for installing appliances side-by-side can be found in the side-by-side merging kit instruction manual.

. . . with partition wall

The wall **a** between the side-by-side appliances must be **at least 5/8" (16 mm)** thick.

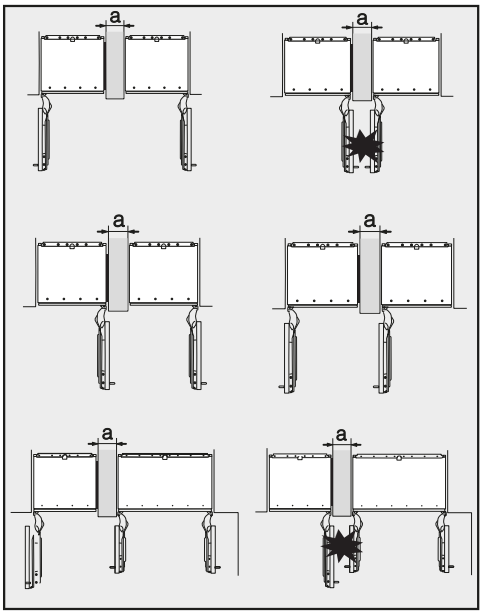

If the door hinges of the refrigeration appliances are next to each other, you must take into account the thickness of the cabinet fronts and door handles so that the appliance doors do not collide and become damaged if they are opened at the same time.

The refrigeration appliances are secured individually in their installation niche using the supplied installation material.

If the partition wall **a** is **narrower than 6 5/16" (160 mm)**, you will need the side panel heater from the side-by-side installation kit to prevent condensation from forming and any resulting damage.

When planning installation niches, please note that the niche into which the refrigeration appliance with the side panel heater is installed must be **3/16" (4 mm)** wider (see “Installation – Building-in dimensions”).

If the partition wall **a** is **thicker than 6 5/16" (160 mm)**, you do not need the side-by-side installation kit, nor the side panel heater.

. . . without partition wall

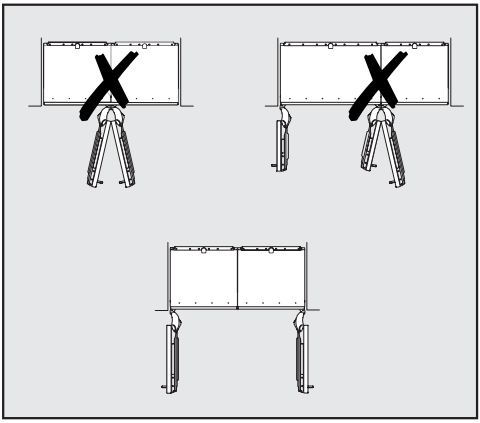

If the appliances are to be installed next to each other without a partition wall between them, they will need to be joined together with the side-by-side installation kit. In addition, you must install the side panel heater to prevent condensation from forming and any resulting damage.

Specifications for the plumbed water connection

- Connection to the water supply must comply with the applicable regulations in the country where the appliance is being installed.
  All appliances and systems used to supply water to the refrigeration appliance must also comply with the applicable regulations in the respective country.
- The appliance may only be connected to the plumbed water connection by qualified technicians.
- The quality of the incoming water must conform to the requirements for drinking water in the country where the refrigeration appliance is being used.
- Connect the water hose to the fresh water supply and avoid connection to a water supply in which the water might stagnate.
- The appliance is only suitable for connection to a cold water line.
- The water pressure must be between 29 psi and 116 psi (2 and 8 bar).
- A faucet must be provided between the water hose and the plumbed water connection to ensure that the water supply can be cut off if necessary.
- Make sure that the faucet is still accessible after the appliance has been installed.

Installation dimensions

Position of the electrical and plumbed water connections

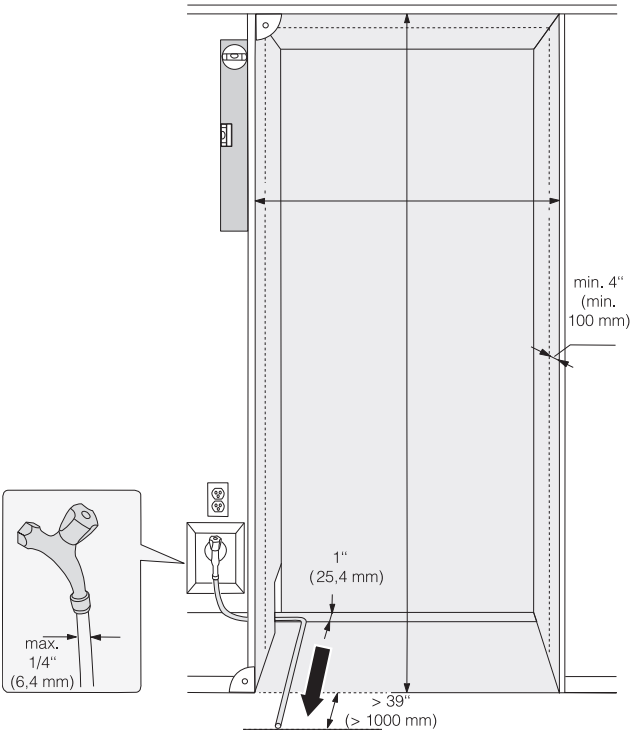

- The electrical connection must not be positioned higher than 9" (228 mm) above the floor.
- The 1/4" (6 mm) plumbed water connection should not be positioned higher than 2" (50 mm) above the floor.

The electrical socket must not be concealed behind the appliance and must be easily accessible in an emergency.

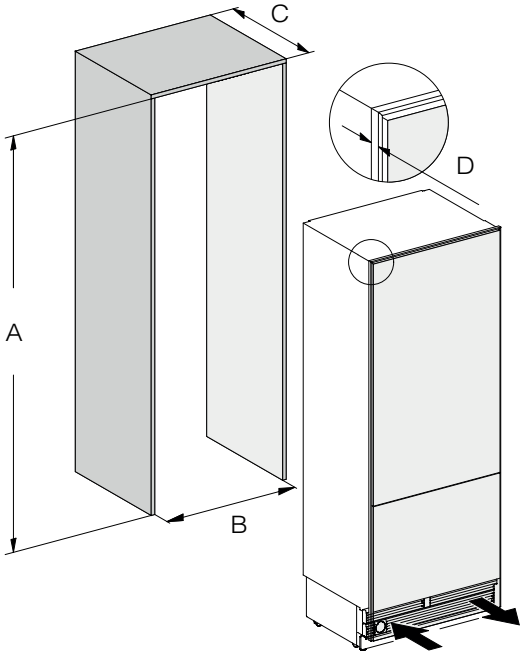

	A	B	C	D
KF 2802 SF, KF 2812 SF	84"–85 3/16" (2134–2164 mm)	30" (762 mm)	24" (610 mm)	3/4" (19 mm)
KF 2902 SF, KF 2912 SF	84"–85 3/16" (2134–2164 mm)	36" (915 mm)	24" (610 mm)	3/4" (19 mm)

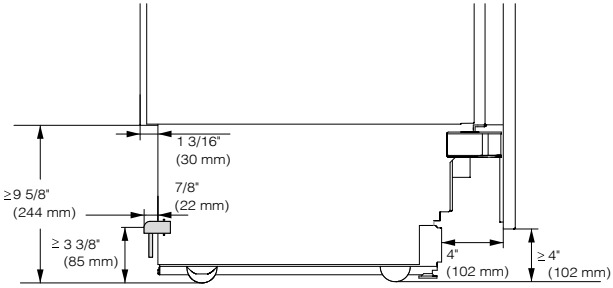

Side view

Dimensions with appliance door open (opening angle 90°/115°)

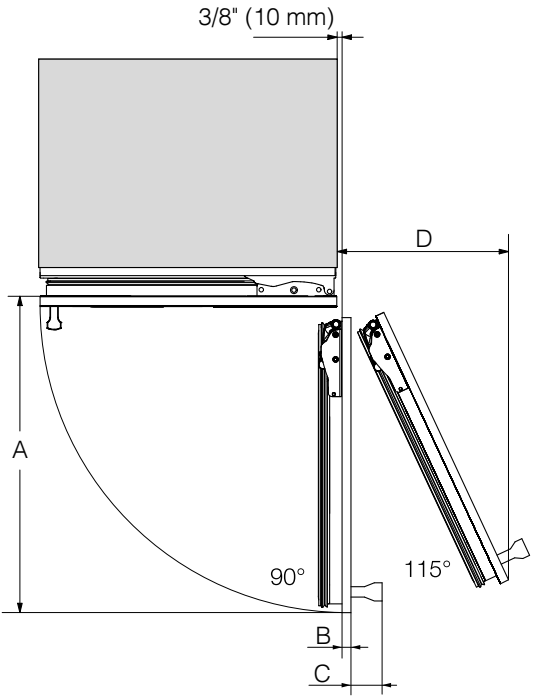

	A	B	C	D
KF 2802 SF, KF 2812 SF	32 5/8" (829 mm)	Cabinet front	Door handle	14 5/16" (363 mm)
KF 2902 SF, KF 2912 SF	38 11/16" (982 mm)	Cabinet front	Door handle	16 7/8" (428 mm)

Building in the appliance

Before starting...

It is essential to read these installation instructions carefully before starting to install the appliance.
The appliance should be installed by a suitably qualified tradesman in accordance with these installation instructions. Safe operation of the appliance is only assured if it has been installed and connected in accordance with the installation instructions.

⚠ Risk of damage and injury!
This appliance is very heavy and can tip forwards when the door is open.
Keep the appliance door shut until the appliance has been built in and secured in its housing in accordance with the operating and installation instructions.
The appliance is both large and heavy. Installation must be carried out by two people.

The appliance must be installed in accordance with local regulations. If local regulations are not available, the following regulations must be observed:

- in the USA: the National Electric Code, ANSI/NFPA 70 - latest edition/ State and Municipal codes and/or local codes.
- in Canada: the Canadian Electric code C22.1 - latest edition/Provincial and Municipal codes and/or local codes.

Tools required

- Cordless drill
- TX 20 screwdriver
- Hammer drill
- Drill bits in various sizes, depending on materials
- Hammer
- Open-ended wrench
- Ratchet wrench, attachment: socket, 5/16" (8 mm)
- Adhesive tape
- Utility knife
- Pipe wrench
- Level
- Tape measure
- Pencil

Other

- Step ladder
- Hand truck

Aligning the installation niche

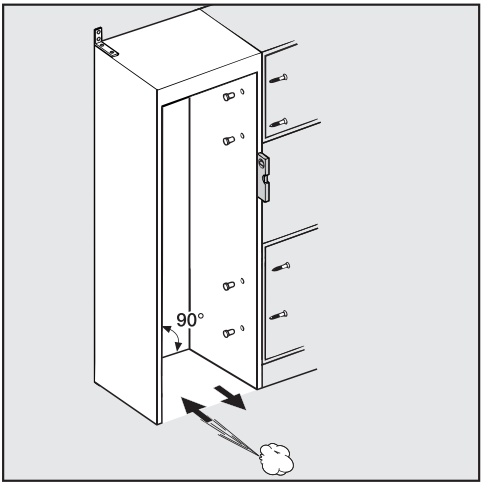

The building-in niche must be carefully aligned using a spirit level before the refrigeration appliance is installed. The niche corners must be at 90° angles to each other, otherwise the cabinet front will not sit straight on all 4 corners of the building-in niche.

Checking the installation niche

- Check the installation dimensions (see “Installation – Installation dimensions”).
- Check the position of the electrical connection. The length of the power cord is 9' 10" (3 m).

The electrical socket must not be concealed behind the appliance and must be easily accessible in an emergency.

- Check the position of the plumbed water connection.

The faucet must not be concealed behind the appliance and must be easily accessible in an emergency.

- Check the surroundings for possible collisions (see “Installation – Dimensions with appliance door open”).
- Only install the refrigeration appliance in stable, solid installation niches, positioned on an even and level floor.
- Also check the installation niche for the following criteria:

- The side panels of the installation niche must be even.
- The surrounding walls of the installation niche must be at least 5/8" (16 mm) thick.
- The surrounding walls must be securely fixed to the floor or wall.
- Shortened side walls must be at least 4" (100 mm) deep.

Before installation

- Before installation, remove any accessories from the back of the appliance.
- Check the refrigeration appliance for damage during transportation.

Do not install a damaged appliance.

- Check that all parts at the back of the appliance are unhindered.
- To protect the floor during installation, secure an off-cut of flooring or similar material to the floor in front of the installation area.

⚠ Risk of damage and injury due to the refrigeration appliance tipping over.
As soon as you unscrew the brackets that fix the refrigeration appliance to the pallet, the appliance is no longer secured.
Due to its weight and size, the refrigeration appliance **must be installed by two people**.

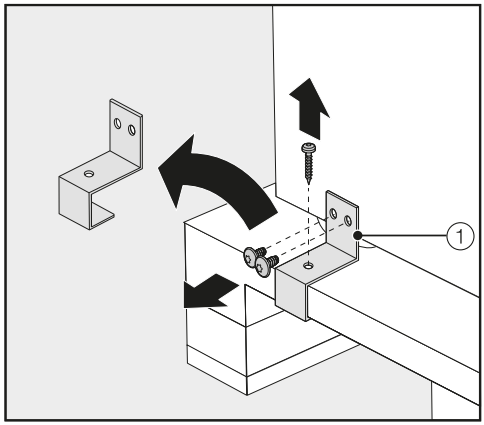

- Unscrew the fixing brackets ①.
- With the help of several people as required, carefully lift the refrigeration appliance from the pallet, starting with the back of the appliance.

⚠ Risk of damaging the floor from the load.
Moving the refrigeration appliance can cause damage to the floor.
Move the refrigeration appliance carefully on floors that are sensitive to scratching.

As soon as you have set the appliance upright, you can move it using the rollers on the bottom.

Preparing the installation niche

⚠ Risk of damage and injury due to the refrigeration appliance tipping over.

This refrigeration appliance is very heavy and can tip forwards when the doors are open.

The installation niche must be secured to the wall behind it and/or above it with several screws. Only this will prevent the refrigeration appliance from tipping over after being installed.

In addition, use the provided anti-tip brackets to secure the installation niche.

The parts required for installation are supplied with the refrigeration appliance. The plastic bags supplied are marked with letters for easy identification.

- When performing the individual assembly steps, observe the letters specified and use the matching plastic bag with the required installation equipment.

The anti-tip brackets prevent the refrigeration appliance from tipping.

The anti-tip brackets are also used to fix the installation niche securely to the surrounding walls.

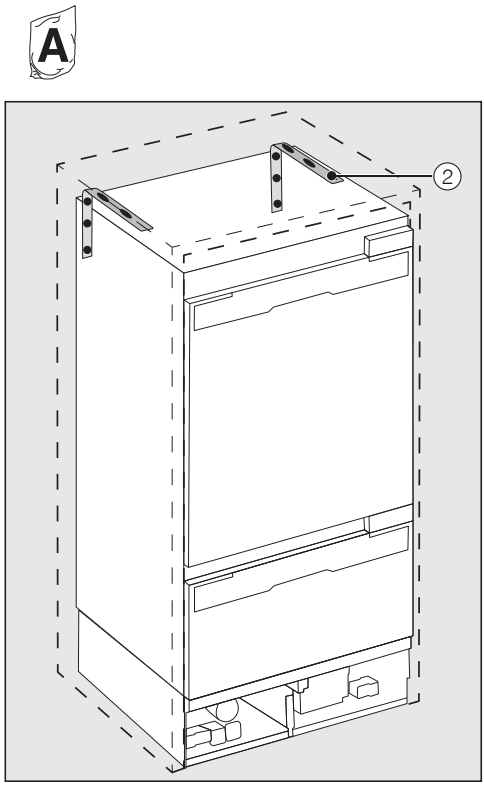

- Use 2 anti-tip brackets ② for each individual appliance or 4 anti-tip brackets for each (side-by-side) combination of 2 appliances.
- Position the anti-tip brackets ② on the left and right of the niche.

Depending on the subsequent adjustment of the feet, the anti-tip brackets are positioned 84"-85 3/16" (2,134–2,164 mm) from the floor of the niche.

⚠ Risk of damage and injury due to the refrigeration appliance tipping over.

If the anti-tip brackets are fixed too high up, they cannot be used to secure the refrigeration appliance.

The distance between the anti-tip brackets and the refrigeration appliance must not exceed 5/16" (8 mm).

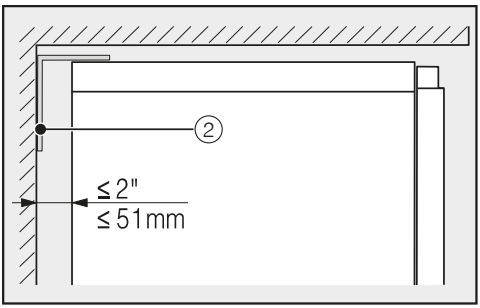

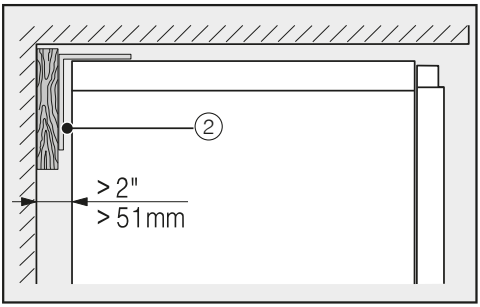

- Make sure that the gap between the refrigeration appliance's rear wall and the installation niche does not exceed 2" (51 mm).
- Place a wooden wedge behind the anti-tip brackets ② if necessary.
- While holding the anti-tip brackets in place, mark the necessary drill holes on the rear wall of the installation niche.

B

Retaining screws for different uses and types of material are supplied in the accompanying pack.

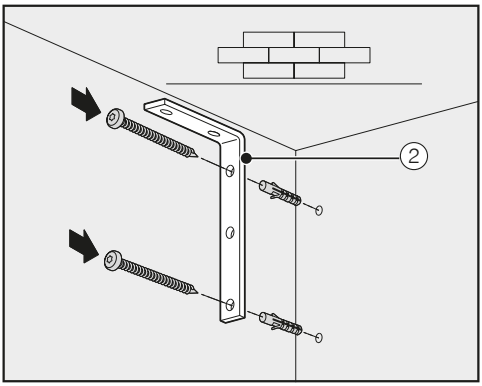

Securing to a concrete wall

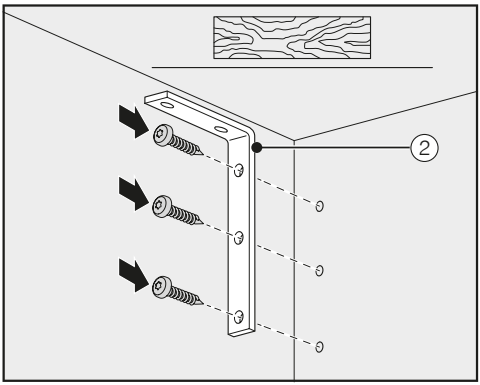

Securing to a wooden wall

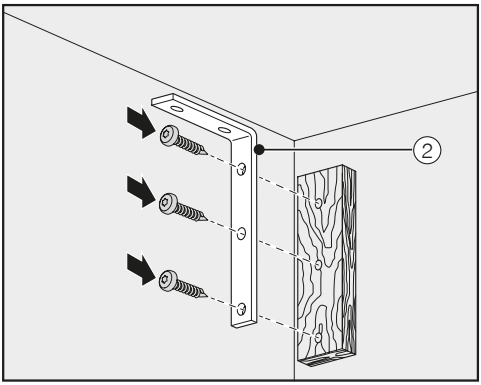

Securing with a wooden wedge

- Secure the installation niche to the wall behind it and/or above it as required using the anti-tip brackets ②.
- Now prepare the plumbed water connection for the refrigeration appliance (see “Plumbed water connection”).

Pushing the appliance into the niche

Push the appliance into the niche, taking care not to damage the power cord and plumbed water connections.

If you are installing several refrigeration appliances side by side, now secure the appliances to one another (see the installation instructions for the side-by-side installation kit).

- To ensure that the refrigeration appliance can then be aligned correctly, the toe-kick ventilation grille must be removed from the appliance toe kick:

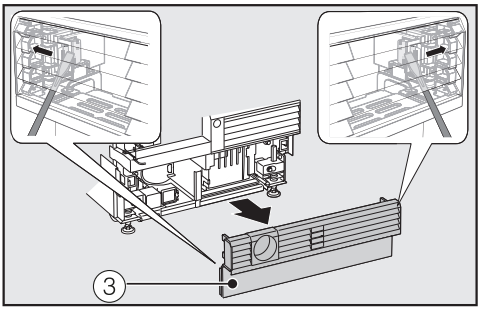

- Carefully guide a flat-head screwdriver through the toe-kick ventilation grille ③ on both sides and use it to push the internal plastic latches outwards to release the toe-kick ventilation grille.
- Place the toe-kick ventilation grille to one side.

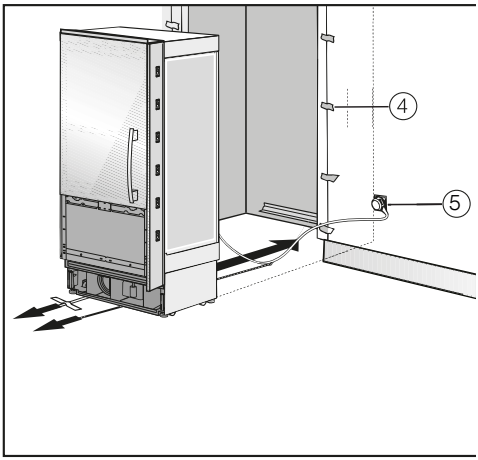

- Affix edge protection ④ to the adjacent cabinet fronts.
- Insert the plug connector at the back of the refrigeration appliance (see “Installation – Electrical connection”).
- Insert the plug ⑤ into the electrical socket.

The electrical socket must be close to the refrigeration appliance and easily accessible.

⚠ Risk of damage due to electrical overload.

If the refrigeration appliance is electrically overloaded, this can cause a short circuit and thus damage your refrigeration appliance.

When you install appliances side by side, each refrigeration appliance must have its own separate electrical socket.

Tip: Secure the power cord to prevent it becoming caught: tie a piece of string to the middle of the power cord and as the refrigeration appliance is being pushed into the niche, pull the cord forward underneath the appliance.

- Carefully push the refrigeration appliance into the niche.
- If the refrigeration appliance cannot be pushed into the niche (because the floor is uneven, for example), unscrew the rear feet slightly (see “Installation – Aligning the refrigeration appliance”) and slide the refrigeration appliance into the installation niche.
- Remove the edge protection ④ from the adjacent cabinet fronts.

Aligning the refrigeration appliance

- Align the appliance with neighboring cabinet fronts as described below.

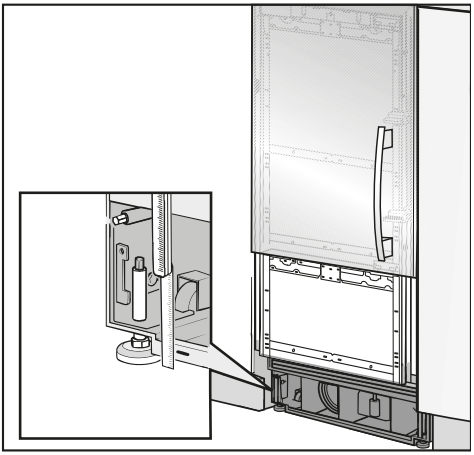

The adjustable feet at the front and back of the appliance can all be adjusted from the front of the appliance.

⚠ Risk of damage due to incorrect feet adjustment.
You may damage the adjustable feet if you use a cordless screwdriver.
Always adjust the front and rear feet by hand.



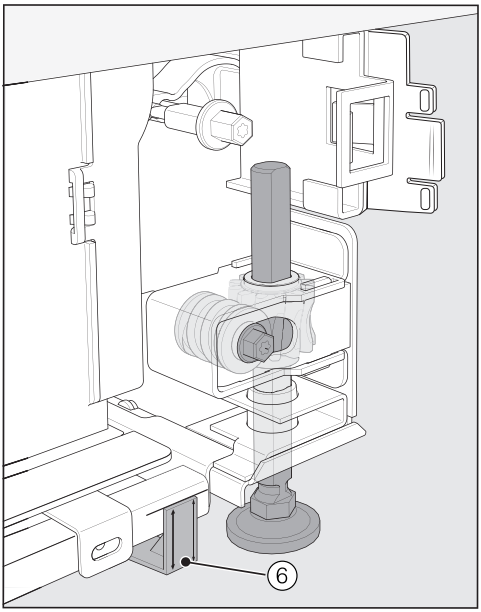

- Position the supplied spacers ⑥ on both sides on the markings next to the adjustable feet at the front of the appliance.

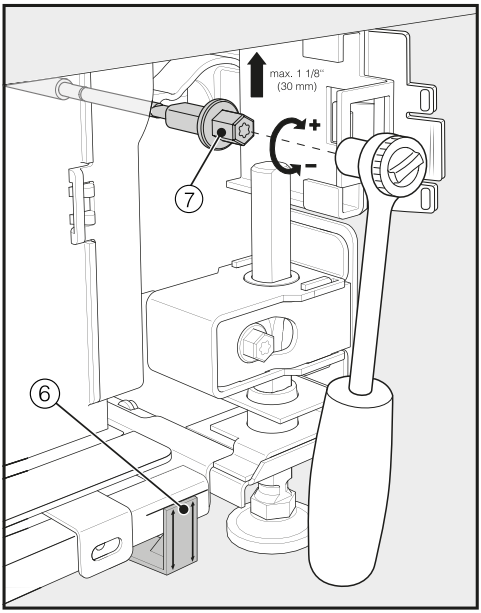

■ Adjust the rear feet with a ratchet (attachment: socket, 8 mm) or a TX 20 screwdriver ⑦.

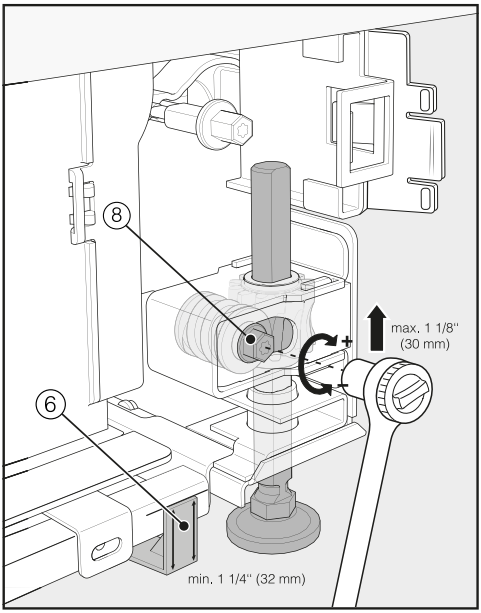

■ Adjust the front feet with a ratchet (attachment: socket, 8 mm) or a TX 20 screwdriver ⑧.

Tip: Proceed carefully when adjusting the feet, alternating between the left and right feet.

■ Unscrew the adjustable feet ⑦ and ⑧ on both sides at least until the marking on the toe-kick is aligned with the required 1 1/4" (32 mm) on the spacer ⑥. The standard dimension of 1 1/4" (32 mm) relates to a niche height of 84" (2,134 mm).

It is important to adjust the feet to a height of at least 1 1/4" (32 mm) so that the ventilation of the refrigeration appliance via the toe-kick functions correctly.

⚠ Risk of damage if the feet are adjusted too much.

The rear adjustable feet can be damaged.

Unscrew the feet **only until** the marking on the toe-kick is aligned to a maximum of 2 7/16" (62 mm) (max. niche height of 85 3/16" (2,164 mm)).

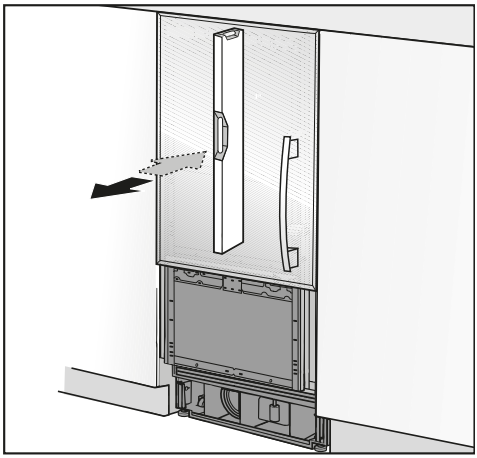

■ Use a level to check the alignment of the appliance.

Securing the appliance in the niche

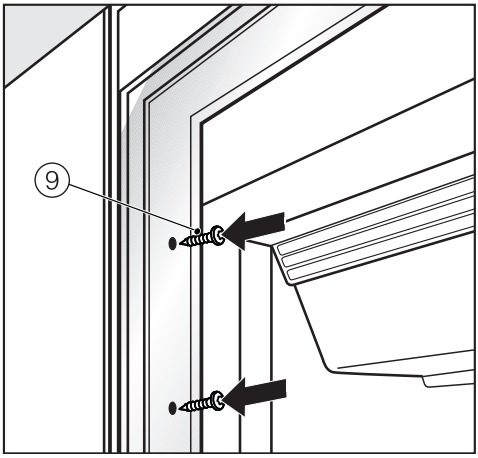

■ Use the screws supplied ⑨ to secure the refrigeration appliance on both sides.

In a side-by-side combination, only the external panels of the two appliances can be secured to the cabinet wall.

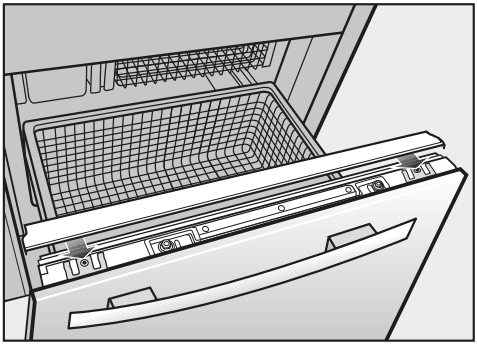

■ Slide the cover onto the lower appliance door from the inside.

Securing the toe-kick board and cover

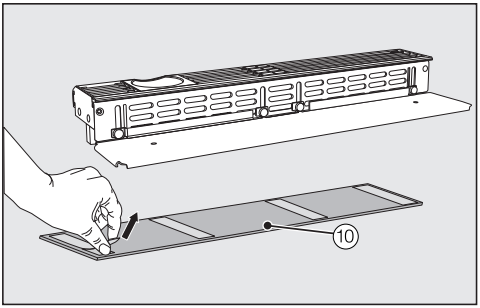

■ Remove the film from the adhesive strips on the toe-kick cover provided ⑩.

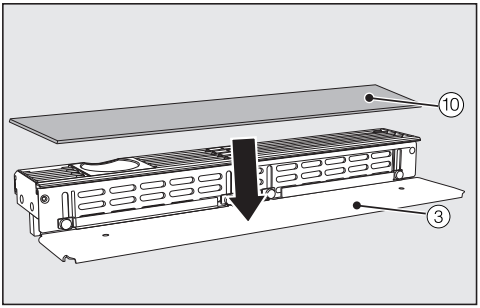

■ Secure the toe-kick cover ⑩ to the toe-kick board ③.

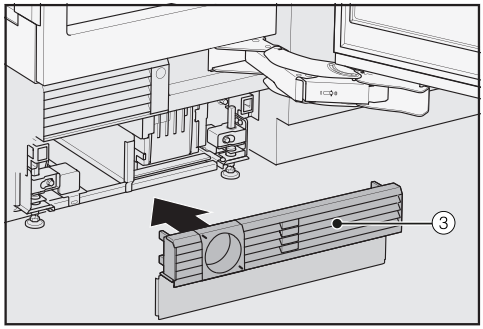

■ Click the toe-kick board ③ onto the bottom of the appliance toe-kick.

Aligning the appliance doors

After installation, align the appliance doors with adjacent cabinet fronts.

To do this, check the gaps to the adjacent cabinet fronts.

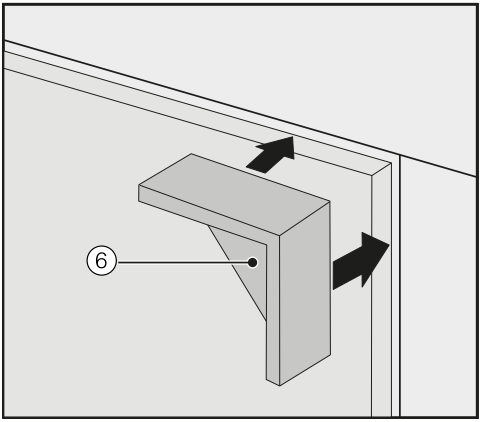

■ If necessary, use the spacers provided ⑥ and place them at the top of the appliance doors on both sides.

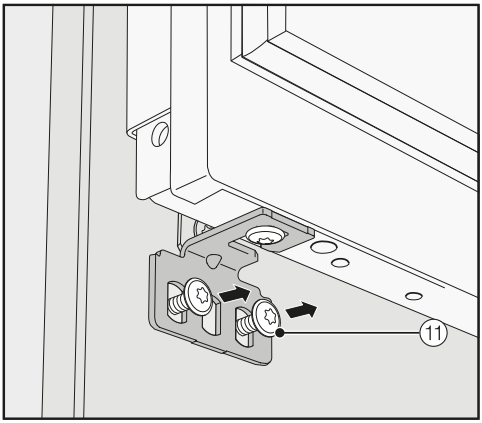

■ Loosen the screws ⑪ on the fixing brackets slightly.

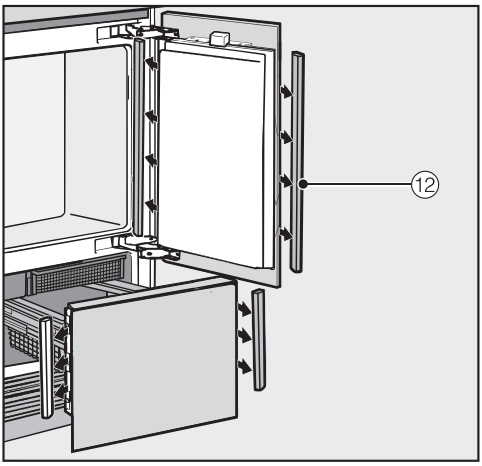

■ Remove the covers ⑫ from both sides of the top and bottom appliance door.

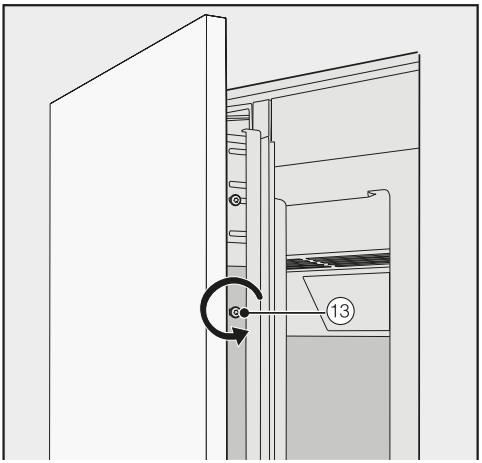

■ Slightly loosen the screws ⑬ in the angle trims on both sides of the top and bottom appliance door.

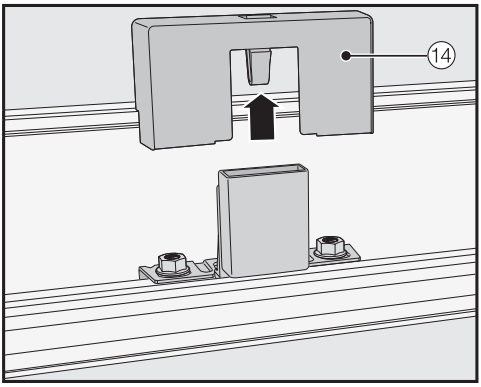

■ Remove the cover ⑭ from the light contact switch of the top appliance door.

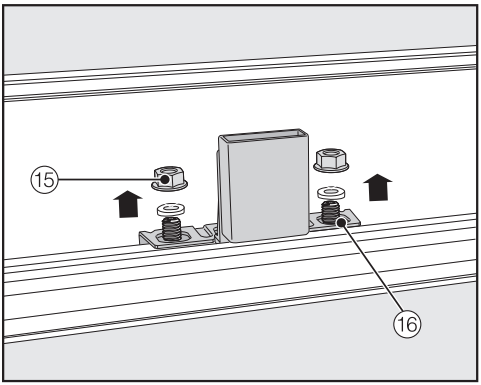

■ Remove the nuts ⑮ and washers from the threaded bolts ⑯ of the top and bottom appliance door.

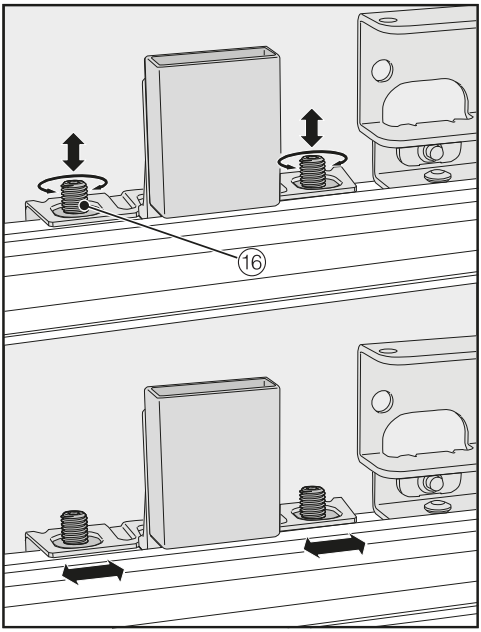

■ Align the height and sides of the appliance doors using the threaded bolts ⑯.

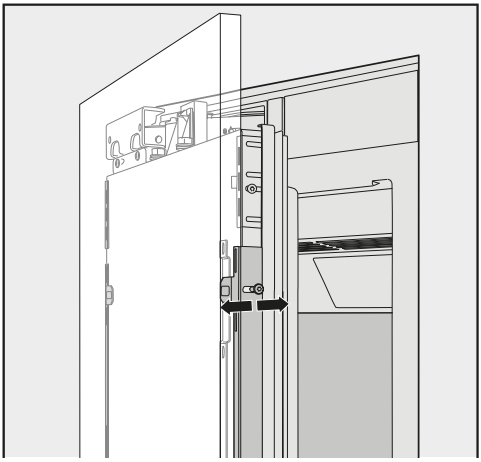

■ If necessary, also align the depth of the appliance doors via the gaps in the angle trims.

- Close the appliance doors and check the distance between the door and adjacent cabinetry fronts again.
- Then re-tighten all screws ⑪ and ⑬.

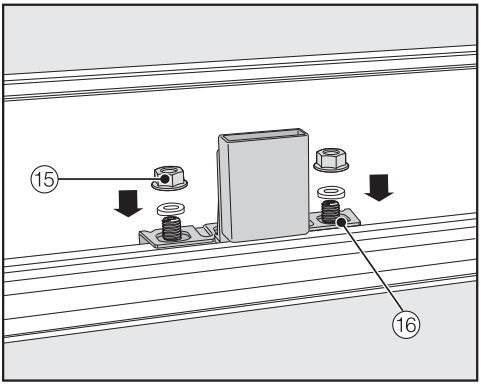

- Place the washers and nuts ⑮ back on the threaded bolts ⑯ and tighten the nuts. The appliance doors are now secured.
- Reattach covers ⑫ and ⑭.

E

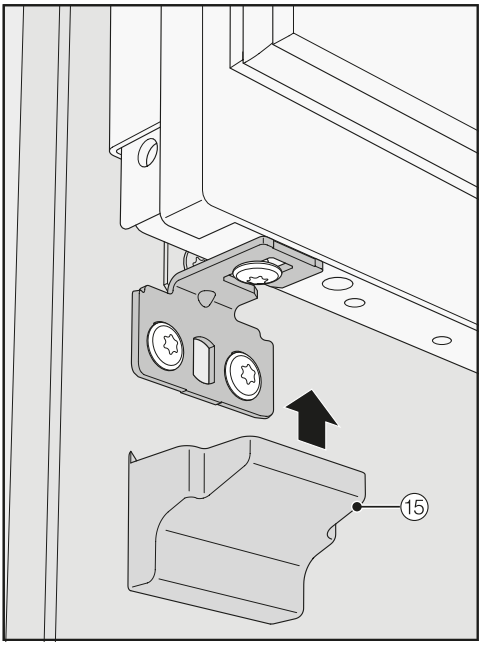

- Place the covers provided ⑮ on the fixing brackets.
- Remove the spacers ⑥ from the appliance door.

Limiting the opening angle of the appliance door



The door hinges are set ex works to enable the appliance door to be opened wide.

If, for example, the appliance door hits an adjacent wall when it is opened, you should limit the opening angle of the appliance door to 90°:

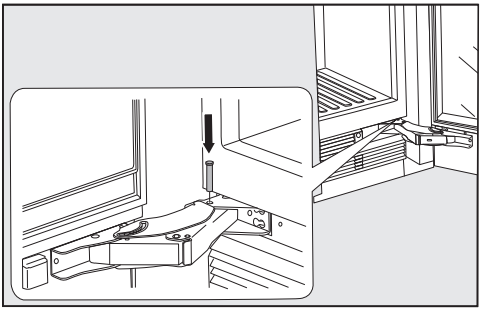

- Open the appliance door.
- Insert the pin into the lower hinge from above.

This will limit the opening angle of the appliance door to 90°.

Water connection

Information on the fresh water connection

⚠ Risk of injury and appliance damage if appliance is not connected properly.
Failing to connect the appliance properly can result in personal injury and/or material damage.
The appliance may only be connected to the fresh water connection by qualified technicians.

⚠ Disconnect the refrigeration appliance from the power supply before connecting it to the water supply.
Close the faucet before connecting the refrigeration appliance to the water supply.

⚠ Risk to health and risk of damage due to contaminated water.
The quality of the incoming water must conform to the requirements for drinking water in the country where the refrigeration appliance is being used.
Connect the refrigeration appliance to the drinking water supply.

Connection to the water supply must comply with the applicable regulations in the country where the appliance is being installed. All appliances and systems used to supply water to the refrigeration appliance must also comply with the applicable regulations in the respective country.

The appliance is only suitable for connection to a cold water line, which

- is directly connected to the water supply in order to ensure that water is circulated in the cold water line.

Avoid connection to a water supply in which the water might stagnate. This can affect the taste of water and ice cubes.

- withstands the operating pressure.
- fulfills the hygiene regulations.

The water pressure must be between 29 and 116 psi (2 and 8 bar).

A shut-off valve must be provided between the water line and the water supply of the building to ensure that the water supply can be cut off if necessary.

Make sure that the shut-off valve is still accessible after the appliance has been installed.

⚠ Risk of damage!
If the water intake is blocked while the Ice Maker is still in use, the water intake pipe can freeze up.
Turn the Ice Maker off if the water intake is interrupted (e.g., while on vacation).

Unduly high water pressure in the system can result in damage to the appliance.
Install a pressure reducing valve if the water pressure in the system exceeds 116 psi (8 bar).
Do not install the system if the water pressure exceeds 120 psi (8.3 bar).
Contact your plumbing specialist if you are unsure of your water pressure.

Installing the water hose to the appliance

A faucet must be provided between the water hose and the plumbed water connection to ensure that the water supply can be cut off if necessary.

Make sure that the faucet is still accessible after the appliance has been installed.

By this time, the installation niche should already have been prepared so that the appliance needs only to be pushed into it.

When installing the water hose, make sure that it is neither kinked nor damaged.

- Position the appliance slightly in front of the installation niche so that the faucet can still be accessed.

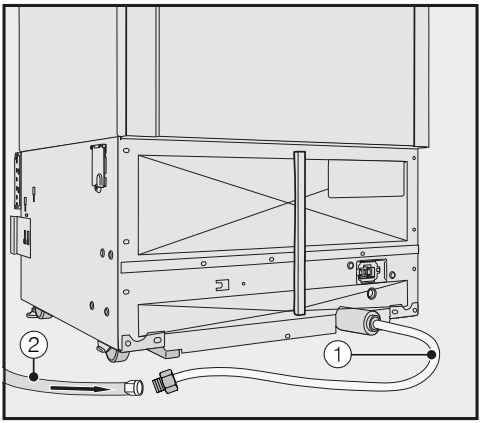

The water connection of the refrigeration appliance ① is ready for connection at the rear of the appliance.

- Install the water hose ② onto the water connection ① at the rear of the appliance. Ensure that it is screwed into position correctly and watertight.

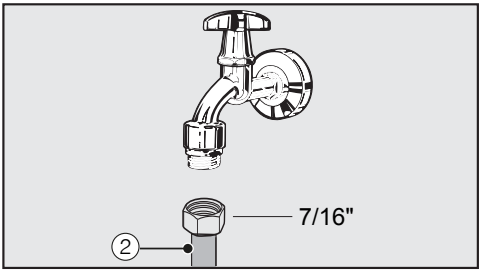

- Connect the water hose ② to the faucet.
- Ensure that it is properly screwed into position.
- Slowly open the faucet in the water supply line and check the whole water system for leaks.
- The appliance can now be installed in the niche (see “Installing the appliance”).

Electrical connection

⚠ Risk of electric shock!
The appliance must only be switched on when it has been installed in accordance with the installation instructions.
Ground the appliance.
The appliance must not be grounded via a gas pipe.
If in doubt, have a suitably qualified and experienced electrician check that the installation complies with relevant regulations.
Do not install a fuse into neutral current or grounding electrical circuit.
Do not use extension cords or ungrounded (two prong) adapters.
Do not use a frayed or damaged power cord.

⚠ Risk of electric shock!
For protection against electric shock, this appliance is equipped with a pole-free plug which is protected against reverse polarity. The electrical outlet must be properly grounded.
Do not remove the round grounding connector pin from the plug.
Use only a grounded plug adapter.

Wait for 1 hour after installation before plugging the appliance into the power supply. This allows coolant and refrigerator oil to settle in accordance with regulations.

Ensure that the voltage of the power supply corresponds with the connection voltage of the appliance. A power supply of 110–120 V, 60 Hz and 10–16 Amp, which is protected by a power switch or a fuse, is required to operate the appliance.

The manufacturer recommends operating the appliance on a dedicated circuit to avoid overloading the electrical circuit.

All relevant legal electrical, fire, and building regulations must be observed when installing the electrical outlet and/or the appliance.

In certain countries, appliances are required to be connected to the electrical supply via a wall-mounted ON/OFF switch.

To avoid the risk of fire, electric shock, or other injuries, the appliance must be installed and connected by a suitably qualified electrician in accordance with all relevant local and national regulations and standards, including fire prevention.

The socket must not be concealed behind the appliance and must be easily accessible so that the appliance can be quickly disconnected from the electrical supply in case of an emergency.

If the outlet is no longer accessible after installation, an additional means of disconnection must be provided for all poles. Suitable means of disconnection include switches with an all-pole disconnect device with a contact opening of at least 1/8" (3 mm). These can be circuit breakers, fuses, and relays.

The plug and power cord must not come into contact with the back of the appliance as vibrations can cause damage to these components. This could result in a short circuit.

Do not plug other appliances into electrical outlet behind this appliance.

Do not connect the appliance to a stand-alone inverter such as those used with an autonomous energy source e.g., **solar power**.
When the appliance is turned on, power surges could result in a safety switch-off. This can damage the electronics. The appliance must not be used with so-called **energy saving devices** either. These reduce the amount of energy supplied to the appliance, causing it to overheat.

If the power cord needs to be replaced, this must be performed by a qualified technician.

Connecting the appliance

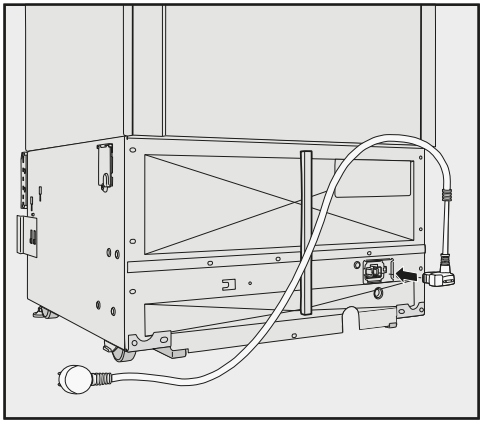

- Insert the plug into the back of the appliance.

Make sure that the plug has clicked into position correctly.

- Insert the plug into the electrical outlet and switch on.

The appliance is now connected to the electricity supply.

	Normal energy consumption	Increased energy consumption
Installation / Maintenance	In a well-ventilated room.	In an enclosed, poorly ventilated room.
	Protected from direct sunlight.	In direct sunlight.
	Away from heat sources (radiator, range/oven).	Near a heat source (radiator, oven).
	Where the ideal room temperature is approx. 68°F (20°C).	Where the ambient room temperature is above 77°F (25°C).
	Air vents uncovered and dusted regularly.	Where the ventilation openings are blocked and full of dust.
Temperature setting	39°F to 41°F (4°C to 5°C) in the refrigerator section	The lower the temperature in the appliance, the higher the energy consumption.
	Dry compartment in the MasterFresh zone approx. 32°F (0°C).	
	0°F (-18°C) in the freezer section	

Saving energy

	Normal energy consumption	Increased energy consumption
Use	The drawers, and shelves are arranged as they were when the appliance was delivered.	
	Only open the door when necessary and for as short a time as possible. Store food in an organized way.	Frequent opening of the door for long periods will cause a loss of coldness. The appliance will try to cool down and the compressor will run for longer periods.
	When shopping, use a cooler bag and place the food in the appliance as soon as possible. Replace any food removed as quickly as possible, before it warms up too much. Allow hot food and drinks to cool down before placing them in the appliance.	Hot food or food at room temperature raises the temperature inside the refrigeration appliance. The appliance will try to cool down and the compressor will run for longer periods.
	Store food well packaged or covered.	The evaporation or condensation of liquids in the refrigerator section will cause a loss of coldness.
	Place frozen food in the refrigerator section to defrost.	
	Do not overfill the appliance in order to allow the air to circulate.	Poor air circulation will cause a loss of coldness.

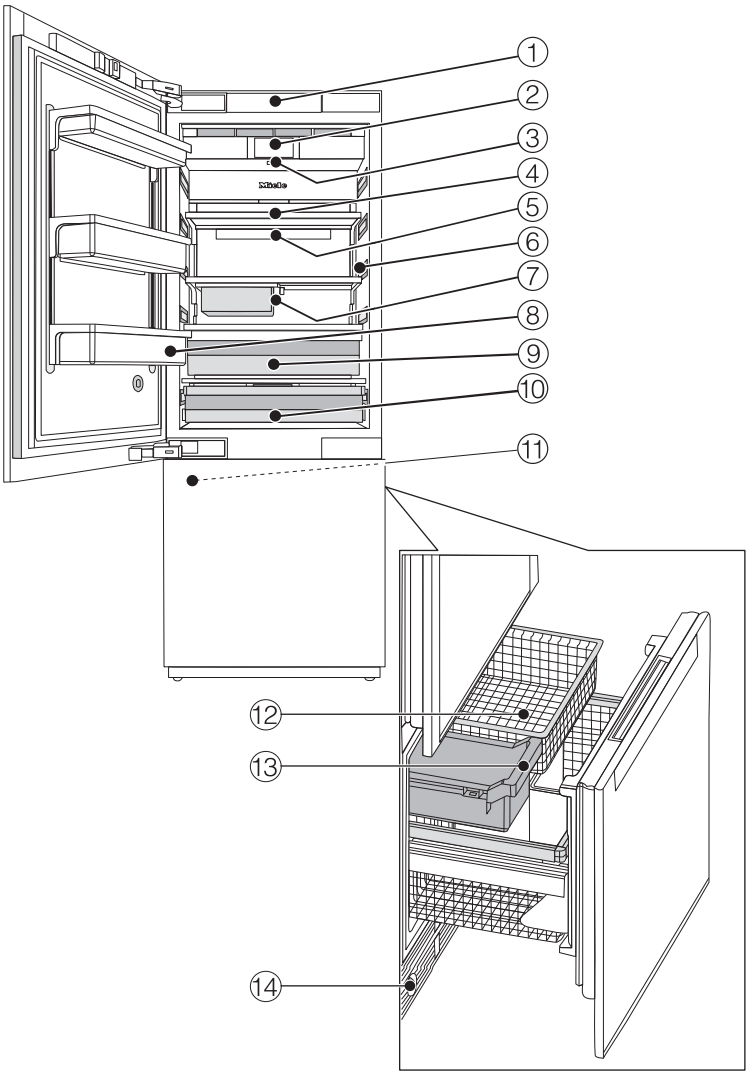

① Automatic door opening (Push2open/Pull2open)

② Display

③ On/Off switch

④ Shelves

⑤ Holder for the Active AirClean filter

⑥ Interior lighting

⑦ Hanging drawer for storing small food items

⑧ Door shelves in the appliance door

⑨ Humidity-controlled compartment with moisture regulator for fruit and vegetables

⑩ Dry compartment with low temperature for food which goes off quickly

⑪ Ice maker

⑫ Freezer baskets

⑬ Ice-cube container

⑭ Water filter

The dry compartment in the MasterFresh zone fulfills the requirements of a cold storage compartment according to EN ISO 15502.

Main screen

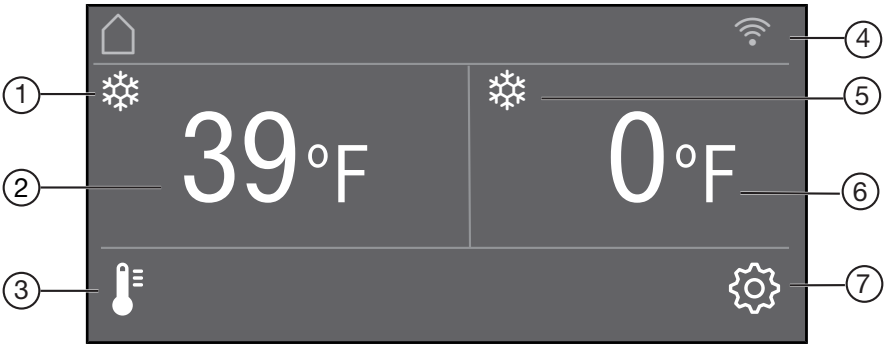

① Automatic SuperCool display
(only visible when the Automatic SuperCool function has been switched on)

② Temperature display (target temperature) for the refrigerator section

③ Sensor control
for setting the temperature

④ Display for Miele@home connection status
(only visible when the Miele@home function has been set up)

⑤ SuperFrost display
(only visible when the SuperFrost function has been switched on)

⑥ Temperature display (target temperature) for the freezer section

⑦ Settings mode sensor control
for adjusting various settings in Settings mode

Settings mode

In Settings mode, you can select the following appliance functions and alter their settings to some extent:

Symbol		Function
	Language	Set
	Display Brightness	Adjust (darker to brighter)
	Color Scheme	Set (dark or bright)
/	Buzzer Tones	Adjust the volume or switch off the Buzzer Tones completely (e.g., for the door alarm)
/	Keypad Tone	Adjust the volume or switch off the Keypad Tone completely
°F / ° C	Temperature Unit	Set (°Fahrenheit or °Celsius)
/	Keypad Lock	Switch on or off (see “Selecting additional settings”)
	Eco Mode	Switch on or off (see “Selecting additional settings”)
	Self Test	The system restarts and is checked for faults or malfunctions (see “Selecting additional settings”)
	Door Assistant	Switch on (Push2Open or Pull2Open) or switch off (see “Selecting additional settings”)
	Miele@home	Set up, deactivate, or query WiFi connection status (see “Selecting additional settings”)
*	Demo Mode	Switch off * (only visible when Demo Mode, is switched on see “Selecting additional settings”)
	Factory Default	Reset to default settings (see “Selecting additional settings”)

	Vacation	Switch on or off (see “Selecting additional settings”)
	Dispenser Unit	Switching the ice maker on and off (see “Making ice cubes”)
	Sabbath Mode	Switch on or off (see “Selecting additional settings”)
	Water Filter Display	Switch on or off or reset (see “Selecting additional settings”)
	Display Active Air-Clean Filter	Switch on or off or reset (see “Selecting additional settings”)

Symbols in settings mode

</>	Scroll in settings mode or select a setting
−/+	Change a setting (e.g., display brightness)
OK	Confirm a setting
	Exit the menu level

Accessories

Accessories supplied

Appliance plug

Active AirClean filters

The Active AirClean filters neutralize unpleasant odors in the refrigerator section and stop odors from being transferred to the food.

Insert the supplied Active AirClean filters as described under “Cleaning and care – Replacing the Active AirClean filters”.

We recommend replacing the Active AirClean filters every 6 months.

Water filter (IntensiveClear 2.0 charcoal filter)

The IntensiveClear 2.0 charcoal filter, which is already installed in the refrigeration appliance, improves the taste and smell of the ice cubes by removing chlorine and other substances from supply water.

However, to ensure the highest quality of the ice cubes, it is essential to change the water filter (IntensiveClear 2.0 charcoal filter) regularly.

Toe-kick cover in stainless steel look

The toe-kick cover in stainless steel look ensures a uniform stainless steel appearance.

Optional accessories

A range of useful Miele accessories and care products are available for your appliance.

Active AirClean filters

See “Accessories supplied” for a description.

Water filter (IntensiveClear 2.0 mesh filter)

The IntensiveClear 2.0 mesh filter filters supply water for making ice cubes.

If an external water filter is attached to your household water supply, you can use an IntensiveClear 2.0 mesh filter in place of an IntensiveClear 2.0 charcoal filter.

Unlike the IntensiveClear 2.0 charcoal filter, the IntensiveClear 2.0 mesh filter does not need to be replaced, just cleaned.

Water filter (IntensiveClear 2.0 charcoal filter)

See “Accessories supplied” for a description.

Side-by-side installation kit and Top Frame

To install two or more refrigeration appliances next to one another, you will need the side-by-side installation kit (see “Installation – Side-by-side”).

You also need a cover (Top Frame KTF) to connect the appliances and to cover the gap above the tops of the appliances.

Accessories are available to order via the Miele Webstore, from Miele directly (see back cover for contact details) or from your Miele dealer.

Before first use

Allow the appliance to stand for approx. 1 hour prior to connecting it to the power supply.
This will help prevent any malfunctions.

Packaging material

- Remove all packaging material from the inside of the appliance.

Leftover tape residue.
Always remove all packaging material, including adhesive tape, **before** switching on the appliance.

Cleaning

Please refer to the relevant instructions in “Cleaning and care”.

- Clean the inside of the appliance and the accessories.

Choosing the right Door Assistant (Push2Open/Pull2Open)

The Door Assistant helps you to open the appliance door.

You can choose between the two Door Assistants Push2Open and Pull2Open (see “Selecting additional settings – Switching on the Door Assistant ”). The default Door Assistant is Push2Open.

- Select the Pull2Open Door Assistant if your appliance has a cabinet front with a handle.
- Select the Push2Open Door Assistant if your appliance has a handle-free cabinet front.

Inserting the Active AirClean filters

Your refrigeration appliance is equipped with 2 Active AirClean filters which neutralize unpleasant odors in the refrigerator section.

- Insert the Active AirClean filters supplied as described under “Cleaning and care – Replacing the Active AirClean filters”.

Miele@home

Your refrigeration appliance is equipped with an integrated WiFi module.

Networking is deactivated at the factory.

To use this feature, you will need:

- a WiFi network
- the Miele app
- a Miele user account You can create a user account via the Miele app.

The Miele app will guide you as you connect your refrigeration appliance to your home WiFi network.

Once the refrigeration appliance is connected to your WiFi network, you can use the app to carry out the following activities, for example:

- Call up information on the operating status of your refrigeration appliance.
- Change the settings on your refrigeration appliance.

Connecting your refrigeration appliance to your WiFi network will increase energy consumption, even when the appliance is switched off.

Make sure that the signal of your WiFi network is sufficiently strong in the place where you want to set up your refrigeration appliance.

Availability of the WiFi connection

The WiFi connection shares a frequency range with other appliances (including microwave ovens and remote control toys). This can cause sporadic or even complete connection failures. Therefore, the availability of featured functions cannot be guaranteed.

Miele@home availability

The ability to use the Miele app depends on the availability of the Miele@home service in your country.

The Miele@home service is not available in every country.

For information about availability, please visit www.miele.com.

Miele App

The Miele App is available to download free of charge from the Apple App Store® or from the Google Play Store™.

Download on the App Store

ANDROID APP ON Google Play

Operating the refrigeration appliance

The touch display can be scratched by pointed or sharp objects, e.g., pens.

Only touch the display with your fingers.

If your fingers are cold, the touch display may not react.

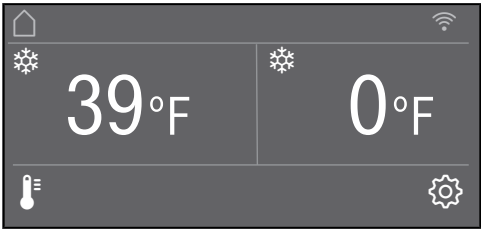

The sensor controls underneath the temperature display can be **selected** directly by touch; the symbols and text in or above the temperature display can only be **displayed**.

Settings mode ⚙

In Settings mode ⚙, you can select different refrigeration appliance functions and alter their settings to some extent (see “Selecting additional settings”).

- Touch the ⚙ sensor control to open Settings mode.
- Use the < and > sensor controls to select the function for which you wish to adjust the settings.
- Confirm your selection with *OK*.
- Adjust the settings using either the < and > sensor controls or the + and − sensor controls.
- Confirm your selection with *OK*.

The setting with the **colored** background is always the **selected** setting; it can be confirmed directly with *OK*.

- Touch the ⮌ sensor control if you wish to switch to the previous menu level or terminate the process.

Every touch of the display is confirmed with an audible keypad tone. You can switch off this keypad tone in Settings mode ⚙.

Starting up for the first time

■ Open the appliance door.

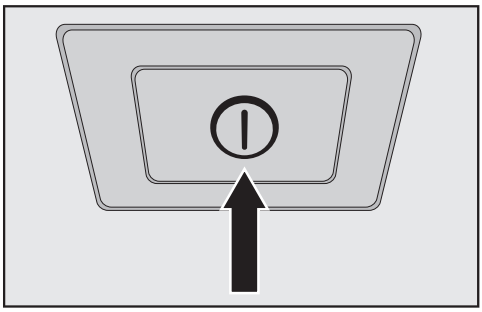

■ Turn the refrigeration appliance on by pressing the On/Off switch.

The On/Off switch is located below the display.

The refrigeration appliance will start to cool and the interior lighting will come on when the appliance door is opened.

Miele will appear in the refrigeration appliance display.

■ When you turn the appliance on for the first time, you will be asked to configure the following settings:

- Set the Language (if you accidentally select the wrong Language, return to Settings mode ⚙ and use the ⚑ symbol to change the language)
- Set the Temperature Unit: °C (degrees Celsius) or °F (degrees Fahrenheit)
- Set up Miele@home:

■ Select Continue if you would like to set up Miele@home now. You will then be guided by the display and the Miele app.

As soon as your refrigeration appliance has been integrated into your WiFi network, the message Connection successful will appear on your refrigeration appliance's display.

■ Confirm the process with *OK* again.

If the WiFi connection is active, ᯤ will appear in the display.

■ Select Skip if you would prefer to set up Miele@home later.

■ Touch the ⮌ sensor control if you want to return to the previous menu level.

Set-up Successful will appear in the display.

■ Confirm the initial start-up with *OK*.

The main screen will appear on the display (see "Appliance description – Main screen").

You cannot terminate the initial start-up process. The only way to terminate the process is to switch off the refrigeration appliance, though the process will continue when the appliance is switched back on.

Switching on the appliance

- Open the appliance door.
- Turn the refrigeration appliance on by pressing the On/Off switch.

The refrigeration appliance will start to cool and the interior lighting will come on when the appliance door is opened.

Miele will appear, followed by the main screen on the refrigeration appliance display:

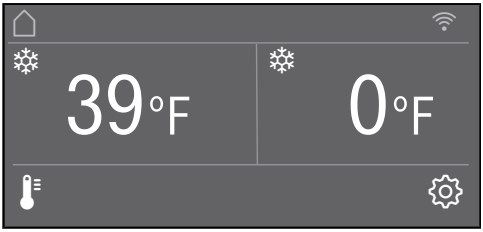

The message Freezer temperature too high. Max. temperature °C will appear on the display when the appliance is switched on for the first time or until the selected temperature has been reached in the freezer section.

An alarm tone sounds.

- Confirm the message with *OK*.

The message disappears from the display and the alarm tone stops.

However, the message may reappear on the display after a brief delay.

As soon as the selected temperature has been reached in the freezer section, the message will disappear completely from the display and the alarm tone will stop.

To enable the temperature to get sufficiently cold inside the refrigeration appliance, allow the appliance to run for a few hours before placing food in it. Do not place food in the freezer section until it has reached the required coldness (at least 0°F/-18°C).

⚠ Risk of damage due to high humidity.

In environments with high humidity, condensation can build up on external refrigeration appliance panels. This condensation can cause corrosion and lead to damage on external appliance panels.

Install the refrigeration appliance in a dry and/or air-conditioned room with sufficient ventilation.

Do not switch the refrigeration appliance on if you are going to be away for a long period of time.

Do not leave the refrigeration appliance unattended for a long period of time while it is switched on.

Switching off the appliance

- Turn the refrigeration appliance off by pressing the On/Off switch.

The cooling and interior lighting are switched off.

Please note: the refrigeration appliance is not disconnected from the power supply when it is switched off with the On/Off switch.

Switching off for longer periods of time

If the appliance is not going to be used for a longer period of time:

- Turn the appliance off.
- Unplug the appliance or switch off the breaker.

⚠ Risk of damage due to frozen water intake pipe.
If the water intake is blocked while the ice maker is still in use, the water intake pipe can freeze up.
Turn the ice maker off if the water supply is interrupted (e.g., while on vacation).

- Close the faucet in the water supply line (approx. 3 hours before switching off the appliance to avoid the build-up of bacteria caused by stagnant water).
- Empty the ice cube container.
- Clean the refrigeration appliance.
- Replace the water filter (IntensiveClear 2.0 charcoal filter) or clean the water filter (IntensiveClear 2.0 mesh filter).
- Leave the door ajar to air the refrigeration appliance and avoid odors building up inside the appliance.

If, during a long absence, the refrigeration appliance is switched off but not cleaned and the door(s) left shut, there is a danger of bacteria building up inside the appliance.
It is essential to clean the refrigeration appliance.

Selecting additional settings

In settings mode ⚙, certain settings can be adjusted and functions selected, allowing you to adjust the machine to suit your requirements.

The following section only describe the functions in settings mode ⚙ that require further explanation.

The door alarm and other warnings are automatically disabled when the appliance is in settings mode ⚙.

Switching Keypad Lock 🔒/🔓 on or off

Switch Keypad Lock on if you wish to protect your refrigeration appliance from unwanted temperature changes or other unintentional adjustments in Settings mode ⚙.

- In Settings mode ⚙, use the < and > sensor controls to select Keypad Lock and select *OK* to confirm your selection.
- Use the < and > sensor controls to switch the sensor lock On or Off and select *OK* to confirm your selection.
- The keypad lock will not be activated until you close the appliance door.

Nothing will appear on the display to indicate that the keypad lock is switched on.

The message Press OK for 6 seconds to unlock will appear on the display if you select a sensor control while the sensor lock is switched on.

- Follow the instructions on the display.

The display is unlocked briefly so you can adjust the setting as required. Closing the appliance door will reactivate the sensor lock.

Switching Eco Mode on or off

Eco Mode is useful when you are going on vacation, for example, and you do not wish to switch off the appliance completely or do not need a high degree of cooling. Energy consumption in Eco Mode is lower than in normal operation.

The fridge zone is regulated to a temperature of 43°F (6°C); the dry compartment in the SmartFresh zone is regulated to approx. 37°F (3°C).

The freezer zone is regulated to a temperature of 3°F (-16°C).

If the Automatic SuperCool or SuperFrost function is switched on, these will be automatically switched off when Eco Mode is selected.

- In Settings mode, use the < and > sensor controls to select the Eco Mode and select *OK* to confirm your selection.
- Use the < and > sensor controls to switch Eco Mode On or Off and select *OK* to confirm your selection.

Only the changed temperatures in the display indicate that Eco Mode is switched on.

Tip: You can also switch off the Eco Mode function by directly adjusting the temperature (see “The correct temperature – Setting the temperature”).

⚠ Health risk caused by decomposing food.

Storing food at a temperature higher than 0°F (-18°C) in the freezer zone for an extended period of time may impair the storage life and quality of the food.

Only ever switch on the Eco Mode function for a limited period.

When switching to the Eco Mode function, check that the food in the freezer zone is already properly frozen.

Do not freeze any new food while the Eco Mode function is switched on.

⚠ Health risk caused by decomposing food.

The usability and quality of food in the fridge zone may deteriorate if the temperature remains above 37°F (4°C) for an extended period.

Only ever switch on the Eco Mode mode for a limited period.

Do not store any temperature-sensitive food which spoils easily, such as fruit, vegetables, fish, meat, and dairy products, during this time.

Performing a Self Test ☑

Perform a Self Test if you are concerned that your refrigeration appliance is not working properly and want to check if it is suffering from any problems.

- In Settings mode ⚙, use the < and > sensor controls to select Self Test and select *OK* to confirm your selection.
- Touch the ⮌ sensor control if you wish to terminate the process.

The Self Test starts and the appliance is checked for any faults or malfunctions.

- The message System restart will appear on the display if the Self Test does not discover any faults or malfunctions.
- If the Self Test does discover any faults or malfunctions, they are indicated as error messages on the display.

An alarm will also sound.

- If you find the alarm disruptive, you can switch it off in advance by touching the 🔕 sensor control.
- Make a note of the error message(s) displayed.
- Contact Miele Service and inform them of the error message(s) on the display.
- Confirm the message with *OK*.

System restart will appear on the display.

The refrigeration appliance briefly switches off and then back on automatically.

Self test completed will appear on the display.

- Confirm the message with *OK*.

The main screen appears on the display again.

Switching on the Door Assistant

You can choose between the two Door Assistants Push2Open and Pull2Open. The default Door Assistant is Push2Open.

The Push2Open Door Assistant is suitable for cabinet fronts without handles. The door will then open automatically when you gently press against it.

The Pull2Open Door Assistant is suitable for cabinet fronts with handles. The appliance door can be opened easily with little force.

⚠ Risk of damage if the appliance door is closed prematurely.
When the Door Assistant is switched on, repeatedly closing the appliance door early can lead to damage or malfunctions.
Refrain from holding onto or closing the appliance door while automatic door opening is still extended. If you have indeed closed the appliance door, leave it closed for 5 minutes. Automatic door opening resets itself.

If necessary, you can also switch on the Door Assistant for only the fridge zone or the freezer zone. Use the < and > sensor controls to select the required zone and confirm your selection with *OK*.

Please note that the Door Assistant can only be used to control the refrigerator section door.

Switching on Push2Open

- In Settings mode ⚙, use the < and > sensor controls to select Door Assistant and select *OK* to confirm your selection.
- Use the < and > sensor controls to select Mode and select *OK* to confirm your selection.
- Use the < and > sensor controls to select Push2Open and select *OK* to confirm your selection.
- Touch the ⮌ sensor control to return to the previous menu level.

– Adjusting the intensity

You can also adjust the intensity of the Push2Open function. The lower the set intensity, the less force required when you push against the appliance door.

- In Settings mode ⚙, use the < and > sensor controls to select Door Assistant and select *OK* to confirm your selection.
- In Settings mode ⚙, use the < and > sensor controls to select Intensity and select *OK* to confirm your selection.
- Use the < and > sensor controls to select the right intensity (Low, Medium, High) and select *OK* to confirm your selection.

– Adjusting the duration of the Auto-Close function

You can also adjust the duration for how long the appliance door will remain open until it closes automatically.

- In Settings mode ⚙, use the < and > sensor controls to select Door Assistant and select *OK* to confirm your selection.
- In Settings mode ⚙, use the < and > sensor controls to select AutoClose and select *OK* to confirm your selection.
- Use the + and − sensor controls to select the duration (5 to 30 seconds) and touch *OK* to confirm your selection.

To protect against inadvertent opening: if you do not pull the appliance door open, it will close again by itself after a duration defined by you.

Switching on Pull2Open

- In Settings mode ⚙, use the < and > sensor controls to select Door Assistant and select *OK* to confirm your selection.
- Use the < and > sensor controls to select Mode and select *OK* to confirm your selection.
- Use the < and > sensor controls to select Pull2Open and select *OK* to confirm your selection.
- Touch the ⮌ sensor control to return to the previous menu level.

– Adjusting the intensity

You can also adjust the intensity of the Pull2Open function. The lower the set intensity, the less force required when you pull the appliance door.

- In Settings mode ⚙, use the < and > sensor controls to select Door Assistant and select *OK* to confirm your selection.
- In Settings mode ⚙, use the < and > sensor controls to select Intensity and select *OK* to confirm your selection.
- Use the < and > sensor controls to select the right intensity (Low, Medium, High) and select *OK* to confirm your selection.

Switching off the Door Assistant

- In Settings mode ⚙, use the < and > sensor controls to select Door Assistant and select *OK* to confirm your selection.
- Use the < and > sensor controls to select Mode and select *OK* to confirm your selection.
- Use the < and > sensor controls to select Off and select *OK* to confirm your selection.
- Touch the ⮌ sensor control to return to the previous menu level.

Miele@home

Setting up Miele@home

The message Set up Miele@home only appears if the refrigeration appliance has not yet been connected to a WiFi network.

- Connect your refrigeration appliance as described in “Before using for the first time”.

Deactivating Miele@home

- In Settings mode ⚙, use the < and > sensor controls to select Miele@home and select *OK* to confirm your selection.
- Use the < and > sensor controls to select Deactivate and select *OK* to confirm your selection.

Deactivation successful will appear on the display.

- Confirm the message with *OK*.

Your refrigeration appliance is now disconnected from your WLAN network.

The ᯤ symbol will go out on the display.

Activating Miele@home

If you have already activated Miele@home and then disconnected the connection, you will need to reactivate the connection.

- In Settings mode ⚙, use the < and > sensor controls to select Miele@home and select *OK* to confirm your selection.
- Use the < and > sensor controls to select Activate and select *OK* to confirm your selection.

Activation successful will appear on the display.

- Confirm the message with *OK*.

If the WLAN connection is active, ᯤ will appear on the display.

Checking the WLAN connection status

- In Settings mode ⚙, use the < and > sensor controls to select Miele@home and select *OK* to confirm your selection.
- Use the < and > sensor controls to select Connection status and select *OK* to confirm your selection.

Information about the WLAN connection status will then appear on the display:

- ᯤ connected: there is a strong connection
- ᯤ connected: there is an average connection
- ᯤ connected: there is a weak connection
- ᯤ disconnected

Setting up Miele@home again

If you have changed your WiFi network, you can set up Miele@home again for your appliance.

- In Settings mode ⚙, use the < and > sensor controls to select Miele@home and select *OK* to confirm your selection.
- Use the < and > sensor controls to select Set up again and select *OK* to confirm your selection.

Reset configuration? will appear on the display.

- Use the < and > sensor controls to select Yes or No and select *OK* to confirm your selection.

Resetting the network configuration

Reset the refrigeration appliance's settings to the default settings when disposing of your refrigeration appliance, selling it, or putting a used refrigeration appliance into operation. This will reset the network configuration so that all personal data is deleted from the refrigeration appliance. This will also ensure that a previous owner is no longer able to access the refrigeration appliance.

- Reset the settings of the refrigeration appliance as described under "Resetting the settings to their default settings".

Switching off Demo Mode

Demo mode allows the appliance to be presented in the showroom **without the cooling system being switched on**. Do not activate this setting for domestic use.

If Demo mode has been switched on as a default setting, will show on the display.

- In Settings mode ⚙, use the < and > sensor controls to select Demo Mode and select *OK* to confirm your selection.

Press OK for 4 seconds to deactivate will appear on the display.

- Follow the instructions on the display.

The countdown Demo Mode will deactivate in seconds. appears on the display.

Demo Mode deactivated. The appliance will cool down. will appear on the display.

- Confirm the message with *OK*.

The main screen appears on the display again.

Resetting the settings to their default settings

You can reset the refrigeration appliance‘s settings to their default settings.

Reset the refrigeration appliance’s settings to the default settings when disposing of your refrigeration appliance, selling it, or putting a used refrigeration appliance into operation. This will reset the network configuration so that all personal data is deleted from the refrigeration appliance. This will also ensure that a previous owner is no longer able to access the refrigeration appliance.

- In Settings mode, use the < and > sensor controls to select Factory Default and select *OK* to confirm your selection.
- Use the < and > sensor controls to select Reset and select *OK* to confirm your selection.

After a brief delay, Settings reset appears on the display.

- Confirm the message with *OK*.

The initial commissioning process restarts (see “Before first use – Starting up for the first time”).

Selecting additional settings

The refrigeration appliance‘s settings will be reset to the following values:

Function		Default settings
	Language	English
	Display Brightness	Average value (4 of 7 segments)
	Color Scheme	Dark
/	Buzzer Tones	Average value (4 of 7 segments)
/	Keypad Tone	Average value (4 of 7 segments)
°F / ° C	Temperature Unit	°Fahrenheit
/	Keypad Lock	Switched off
	Eco Mode	Switched off
	Door Assistant	Push2open
	Miele@home	Switched off
	Vacation	Switched off
	Dispenser Unit	Switched on
	Sabbath Mode	Switched off
	Water Filter Display	Switched on
	Display Active AirClean Filter	Switched on
	Temperature in the fridge zone	39°F (4°C)
	Temperature in the dry compartment	32°F (0°C)
	Temperature in the freezer zone	0°F (-18°C)

Switching Vacation mode on or off

Vacation is useful when going on vacation, for example, if you do not wish to switch off the fridge zone completely or do not need a high degree of cooling.

Food which does not spoil quickly can be stored in the appliance for some time at this moderate fridge-zone temperature and energy consumption is lower than in normal operation.
This also prevents the build-up of odors and bacteria which can occur if the fridge zone is switched off and the appliance door is closed.

The fridge zone is regulated to a temperature of 57°F (14°C), remaining in operation while also saving energy.

If the Automatic SuperCool function is turned on, this will be turned off when Vacation mode is selected.

Please note that the temperature in the dry compartment in the MasterFresh zone also increases accordingly when Vacation mode is switched on.

The freezer zone remains switched on at the previously set temperature, and the SuperFrost function can still be selected.

Ice cube production is deactivated for as long as Vacation mode is switched on.

⚠ Health risk caused by decomposing food.

The usability and quality of food in the fridge zone may deteriorate if the temperature remains above 37°F (4°C) for an extended period.

Only ever switch on the Vacation mode for a limited period.

Do not store any temperature-sensitive food which spoils easily such as fruit, vegetables, fish, meat, and dairy products during this time.

Switching Vacation mode on

- In Settings mode, use the < and > sensor controls to select the Vacation and select *OK* to confirm your selection.
- Use the < and > sensor controls to select On and select *OK* to confirm your selection.

14°C (57°F) is now displayed on the temperature display for the fridge zone and the interior lighting in the fridge will go out.

The symbol will appear on the temperature display for the fridge zone.

Switching Vacation mode off

- In Settings mode, use the < and > sensor controls to select the Vacation and select *OK* to confirm your selection.
- Use the < and > sensor controls to select Off and select *OK* to confirm your selection.

The temperature you had set previously is now displayed on the temperature display for the fridge zone and the interior lighting in the fridge zone will go on again.

The symbol will disappear from the temperature display for the fridge zone.

Switching Sabbath Mode on or off

The refrigeration appliance has a Sabbath Mode to support the observance of religious customs.

When Sabbath Mode is switched on, you cannot make any settings on your refrigeration appliance.

Ensure that the appliance door is properly closed, as visual and audible alarms are switched off in Sabbath Mode.

- In Settings mode, use the < and > sensor controls to select Sabbath Mode and select *OK* to confirm your selection.
- Use the < and > sensor controls to select On or Off and select *OK* to confirm your selection.

When Sabbath Mode is switched on, will appear on the display and the display brightness will be reduced (the display does not change when the appliance door is closed).

When Sabbath Mode is switched on, the following functions are switched off:

- Door Assistant
  (for cabinet fronts without handles, the appliance door will have to be pulled from the bottom or side)
- Lighting
- All audible and visual signals,
- Temperature display
- The Automatic SuperCool function (if previously switched on)

- SuperFrost function
  (if previously switched on)
- Ice Maker
  (if previously switched on)

You can still select:

- the sensor control for Settings mode ⚙ so that Sabbath Mode can be switched off

The Sabbath Mode function will switch itself off automatically after approx. 125 hours.

⚠ Health risk caused by decomposing food.
As any power failure during Sabbath Mode is not shown on the display, the frozen food may thaw or defrost. This will reduce the storage life of the food.
Check the quality of the food.
Check whether the frozen food has started to defrost. If it has, use the food as soon as possible or cook it before freezing it again.

Switching on, switching off, or resetting the Water Filter Display

Depending on the quantity of ice cubes produced, the Water Filter Display will remind you approx. every 6 months that the IntensiveClear 2.0 charcoal filter needs to be changed. Replace the water filter will appear on the display.

See “Water filter – Replacing the water filter” for instructions on how to replace the IntensiveClear 2.0 charcoal filter.

The first time the IntensiveClear 2.0 charcoal filter needs to be changed, the display will remind you automatically; the reminder does not need to be switched on separately.

Tip: If you have replaced the IntensiveClear 2.0 charcoal filter with an IntensiveClear 2.0 mesh filter, you can use the Water Filter Display as a reminder to clean the IntensiveClear 2.0 mesh filter.

See “Cleaning and care – Cleaning the water filter (IntensiveClear 2.0 mesh filter)” for instructions on how to clean the IntensiveClear 2.0 mesh filter.

Switching on the Water Filter Display

If the Water Filter Display has been switched off once, it must be switched on again if required.

- In Settings mode ⚙, use the < and > sensor controls to select the Water Filter Display and select *OK* to confirm your selection.
- Use the < and > sensor controls to select On and select *OK* to confirm your selection.

The Water Filter Display has been switched on.

Switching off the Water Filter Display

⚠ Risk to health due to contaminated water.
If the IntensiveClear 2.0 charcoal filter is not replaced on a regular basis, it may become contaminated.
Only switch off the Water Filter Display if an external water filter has been attached to your household water supply in place of the IntensiveClear 2.0 charcoal filter. In this case, you should also use an IntensiveClear 2.0 mesh filter in place of the IntensiveClear 2.0 charcoal filter (see “Accessories – Optional accessories”).

- In Settings mode ⚙, use the < and > sensor controls to select the Water Filter Display and select *OK* to confirm your selection.
- Use the < and > sensor controls to select Off and select *OK* to confirm your selection.

The Water Filter Display has been switched off.

Resetting the Water Filter Display

After you have replaced or cleaned the water filter, you must reset the Water Filter Display so that it can be displayed again after 6 months.

If you do not reset the display, it appears again and again.

- In Settings mode ⚙, use the < and > sensor controls to select the Water Filter Display and select *OK* to confirm your selection.
- Use the < and > sensor controls to select Reset and select *OK* to confirm your selection.

The Replace the water filter message disappears from the display.

The Water Filter Display has been activated for the next time the water filter requires cleaning or replacing.

Switching on, switching off, or resetting the Display Active AirClean Filter

The Display Active AirClean Filter will remind you approx. every 6 months that the Active AirClean filters have to be replaced. Change Active AirClean Filter will appear on the display.

See “Cleaning and care – Replacing the Active AirClean filters” for instructions on how to replace the Active AirClean filters.

The first time the Active AirClean filters need to be replaced, the display will remind you automatically; the reminder does not need to be switched on separately.

Switching on the Display Active AirClean Filter

If the Display Active AirClean Filter has been switched off once, it must be switched on again if required.

- In Settings mode, use the < and > sensor controls to select the Display Active AirClean Filter and select *OK* to confirm your selection.
- Use the < and > sensor controls to select On and select *OK* to confirm your selection.

The Display Active AirClean Filter has been switched on.

Switching off the Display Active AirClean Filter

If you do not require the Display Active AirClean Filter, you can switch it off.

- In Settings mode, use the < and > sensor controls to select the Display Active AirClean Filter and select *OK* to confirm your selection.
- Use the < and > sensor controls to select Off and select *OK* to confirm your selection.

The Display Active AirClean Filter has been switched off.

Resetting the Display Active AirClean Filter

After you have replaced the Active AirClean filters, you must reset the Display Active AirClean Filter so that it can be displayed again after 6 months.

If you do not reset the display, it appears again and again.

- In Settings mode, use the < and > sensor controls to select the Display Active AirClean Filter and select *OK* to confirm your selection.
- Use the < and > sensor controls to select Reset and select *OK* to confirm your selection.

The Change Active AirClean Filter message disappears from the display.

The Display Active AirClean Filter to replace the Active AirClean filters has been activated.

It is very important to set the correct temperature for storing food in the appliance. Bacteria will cause food which is not stored at the correct temperature to deteriorate rapidly. Temperature influences the growth rate of these bacteria. Reducing the temperature reduces their growth rate.

The temperature in the appliance will rise:

- the more often the appliance door is opened and the longer it is kept open
- the more food that is stored in it
- the warmer the food is that is being put into it
- the higher the ambient temperature surrounding the refrigeration appliance is. The appliance is designed for use within specific ambient temperatures (climate range). Do not use in ambient temperatures for which it is not designed

... in the fridge zone and in the MasterFresh zone

We recommend a temperature of 39°F (4°C) in the fridge zone.

The temperature in the dry compartment of the MasterFresh zone is regulated automatically and is maintained just above 0°C (32°F) at a fridge-zone temperature of 4°C (37°F).

Please note that if the temperature in the fridge zone is any warmer, the temperature in the dry compartment of the MasterFresh zone will rise as well.

This is also the case if you switch on the Eco Mode and Vacation functions, for example.

Automatic cold air circulation (DynaCool)

The fan automatically turns on when the cooling system for the refrigerator section turns on. It distributes the temperature in the refrigerator section to all areas evenly so that all the food inside will be chilled to about the same degree.

... in the Freezer Zone

To freeze fresh food and to store frozen food for a long time, a temperature of **0°F (-18°C)** is required. At this temperature the growth of bacteria is generally halted. As soon as the temperature rises above 14°F (-10°C), the bacteria become active in the food again so it cannot be kept as long. For this reason, partially defrosted or defrosted food must not be re-frozen. Food may be re-frozen once it has been cooked (boiled or roasted), as the high temperatures achieved when cooking destroy most bacteria.

Setting the temperature

- Touch the symbol for setting the temperature.

The previously set temperatures of the Fridge and Freezer Zones are displayed.

- Use the < and > arrow buttons to select the temperature zone for which you want to adjust the temperature and touch *OK* to confirm your selection.
- Set the temperature you want with the + and − sensor controls. Keeping your finger on the sensor control changes the temperature continuously.
- Confirm the temperature setting with *OK* or wait approx. 8 seconds after the last touch of the sensor. This temperature will be automatically adopted.

Tip: The newly set temperature can also be confirmed and adopted by closing the appliance door.

The temperature display always shows the **required** temperature.

If you have adjusted the temperature, **wait for approximately 6 hours if the appliance is not very full and for approximately 24 hours if the appliance is full** before checking the temperature display. It will take this long for an accurate reading to be given.

- If, after this time, the temperature is still too high or too low, adjust it again.

Temperature range

The temperature can be adjusted:

- From 36°F (2°C) to 46°F (8°C) in the Fridge Zone
- From 7°F (-14°C) to -11°F (-24°C) in the Freezer Zone

The ambient temperature in the room and the installation location can affect the time it takes for the appliance to reach the lowest temperature.
If the ambient temperature is too high, the appliance may not reach the lowest temperature.

Automatic SuperCool function ❄

The Automatic SuperCool function can be used to rapidly reduce the temperature in the refrigerator section to its lowest setting (depending on the room temperature).

Automatic SuperCool is particularly recommended for the rapid chilling of large amounts of fresh food or drink.

Switching on Automatic SuperCool

- Touch the 🌡 sensor control to set the temperature.
- Use the < and > sensor controls to select the temperature display of the fridge zone and select *OK* to confirm your selection.
- Touch the ❄ sensor control to switch the Automatic SuperCool function on.

The ❄ symbol is highlighted in color and the newly set temperature value of 35°F (2°C) appears on the display.

- Confirm the setting with *OK* or wait approx. 8 seconds after the last press of the button. The setting will be automatically adopted.

The symbol ❄ will light up on the temperature display for the fridge zone.

The appliance will now run at maximum power.

Switching off Automatic SuperCool

- Touch the 🌡 sensor control to set the temperature.
- Use the < and > sensor controls to select the temperature display of the fridge zone and select *OK* to confirm your selection.

The ❄ symbol is highlighted in color and the temperature value of 35°F (2°C) is shown on the display.

- Touch the ❄ sensor control to switch the Automatic SuperCool function off.

The ❄ symbol is no longer highlighted in color and the previous temperature setting appears again on the display.

- Confirm the setting with *OK* or wait approx. 8 seconds after the last press of the button. The setting will be automatically adopted.

The ❄ symbol will disappear from the temperature display for the fridge zone.

The refrigeration appliance will continue running at normal power.

If you do not turn off the Automatic SuperCool function, it will turn itself off automatically after approx. 6 hours. The appliance will then run at normal power again.

Tip: To save energy, the Automatic SuperCool function should be switched off once food and drinks are sufficiently chilled.

SuperFrost function ❄

For best results, turn on the SuperFrost function before putting fresh food into the freezer.

Fresh food will be frozen quickly, so that the nutritional value, vitamin content, appearance, and taste are maintained.

Exceptions:

- Placing food in the freezer that is already frozen.
- When freezing up to 4.4 lb (2 kg) kg fresh food daily.

Turning on SuperFrost

SuperFrost should be turned on **4–6 hours before placing food in the freezer**. When freezing the **maximum amount of food**, the SuperFrost function should be switched on **24 hours beforehand**.

- Touch the 🌡 sensor control to set the temperature.
- Use the < and > sensor controls to select the temperature display of the freezer zone and select *OK* to confirm your selection.
- Touch the ❄ sensor control to switch the SuperFrost function on.

The ❄ symbol is highlighted in color and the newly set temperature value of -22°F (-30°C) appears in the display.

- Confirm the setting with *OK* or wait approx. 8 seconds after the last press of the button. The setting will be automatically adopted.

The symbol ❄ will appear on the temperature display for the freezer zone.

The appliance will now run at maximum power.

Turning off SuperFrost

- Touch the 🌡 sensor control to set the temperature.
- Use the < and > sensor controls to select the temperature display of the freezer zone and select *OK* to confirm your selection.

The ❄ symbol is highlighted in colour and the temperature value of -22°F (-30°C) is shown in the display.

- Touch the ❄ sensor control to switch the SuperFrost function off.

The ❄ symbol is no longer highlighted in color and the previous temperature setting appears again on the display.

- Confirm the setting with *OK* or wait approx. 8 seconds after the last press of the button. The setting will be automatically adopted.

The ❄ symbol will disappear from the temperature display for the freezer zone.

The refrigeration appliance will continue running at normal power.

If you do not turn off the SuperFrost function, it will turn itself off automatically after approx. 54 hours. The quantity of fresh food placed in the freezer will determine the duration before the SuperFrost function turns off.
The appliance will then run at normal power again.

Tip: To save energy, you should manually switch off the SuperFrost function once the freezer reaches a **constant** temperature of 0°F (-18°C) or colder. Monitor the temperature in the freezer zone.

Temperature and door alarm

Your appliance is equipped with a warning system to ensure that temperature increases in the freezer section do not go unnoticed and also prevents energy from being wasted when a door is left open.

Temperature alarm

The Freezer temperature too high. Max. temperature °C message appears in the display if the temperature in the freezer zone becomes too warm.
An alarm will also sound.

The temperature display will show the highest temperature that was reached during the time the temperature rose.

The audible and visual signals are triggered, for example:

- When the appliance is switched on and the temperature in the appliance differs greatly from the set temperature.
- If a lot of warm room air enters the freezer when frozen food is being loaded, rearranged, or taken out.
- When large amounts of food are frozen at once.
- When freezing fresh food which is still warm.
- After an extended power failure.

The alarm will be silenced and the message on the display will go out as soon as the reason for the alarm has been resolved.

⚠ Health risk caused by decomposing food.

If the temperature in the freezer remains above 0°F (-18°C) for a long time, the frozen food may start to defrost. This will reduce the storage life of the food.

Check whether the frozen food has started to defrost. If it has, use the food as soon as possible or cook it before freezing it again.

Turning the temperature alarm off early

Before you switch the temperature alarm off, you must determine the cause and rectify it.

If the alarm disturbs you, it can be turned off early.

■ Touch the *OK* sensor.

The alarm stops and the message disappears from the display.

Door alarm

The alarm will sound if an appliance door is left open for more than 2 minutes.
The Close the door message also appears on the display.

As soon as the corresponding door is closed, the alarm will stop and the message on the display will go out.

Turning the door alarm off early

If the alarm disturbs you, it can be turned off early.

- Touch the *OK* sensor control in the display.

The alarm stops and the message disappears from the display.

After a certain time, the alarm will sound again and the message will reappear in the display until the appliance doors have been closed.

Removing or moving the door shelves

Only move or remove the door shelves when they are empty.

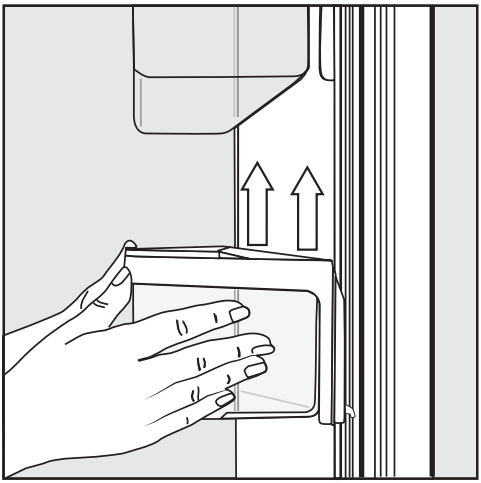

- Hold the shelf on the frame with both hands and lift it slightly so that it can be lifted with the catches on both sides over the guide.
- Remove the shelf or place it in the required position with the catches in the guides at the same height again.
- Make sure that the shelf is straight.

Tip: For the purposes of loading and unloading or cleaning, the clip-in containers in the shelves can be removed from their holders completely.

Removing or moving the shelves

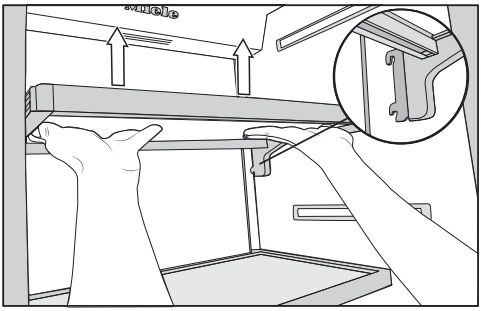

- Hold the shelf on both sides and raise it slightly so that it can be lifted with the catches over the guide at the back.
- Pull the shelf forward.
- Remove the shelf or place it in the required position, with the catches engaged at the back.
- Make sure that the shelf is straight.

Removing the hanging drawer

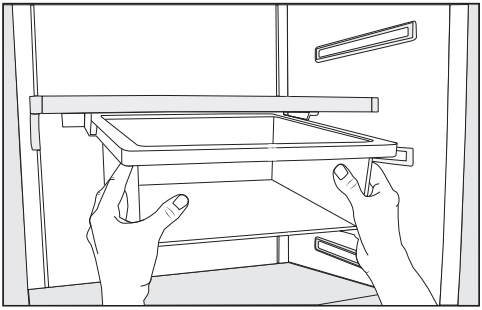

- Pull the hanging drawer straight out to lift it over the pull-out stops on both sides.
- To reinsert the hanging drawer, push it straight into the guide.

The hanging drawer can be moved to the left or right if required.

Moving the hanging drawer

The hanging drawer can be fixed under any shelf in the refrigerator section.

- Pull the hanging drawer out.
- To remove the holder for the hanging drawer, press against the retainers on both sides of the holder from the rear and pull the holder downwards diagonally from the frame.
- To replace the holder, press against the retainers on both sides of the holder from the rear and clamp it into the gap on the frame from below.
- Put the hanging drawer back in.

Tip: Alternatively, you can move the shelf together with the hanging drawer.

Removing compartments from the Fridge Zone

- Pull the compartment out a little bit.

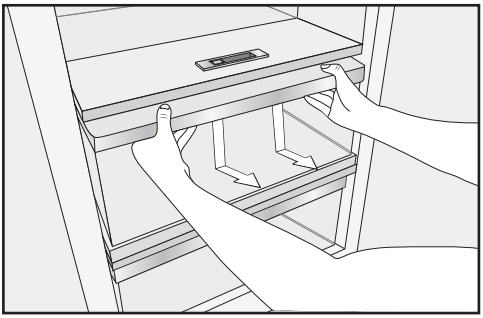

- Using both hands, grasp the compartment frame from below and push the compartment downwards so that the rear end disengages and lifts upwards.
- Pull the compartment forwards to remove it.

Push the runners back in again to avoid damaging them!

Be careful not to wash away the special lubricant in the telescopic runners during cleaning.
Wipe the telescopic runners with a damp cloth to clean them.

- To reinsert the compartment, position it on the telescopic runners so that it clicks into place.

Removing the freezer baskets

The freezer baskets can also be removed if necessary (e.g., for cleaning).

- Open the lower appliance door as wide as possible.
- Pull the freezer basket out as far as it will go.

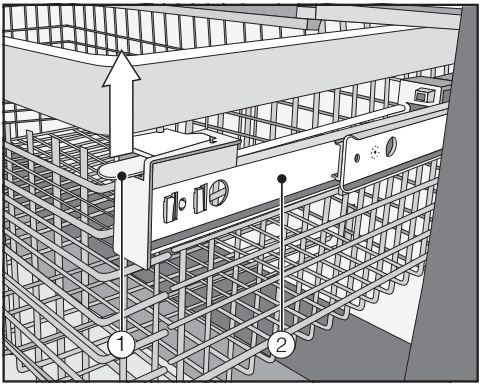

- Raise the snap fastening ① on both sides, unclip, and carefully lift the basket out.
- To replace it, pull the telescopic runners ② out as far as they will go.
- Place the freezer basket back in again.
- Slide the basket all the way back in again until it engages in the snap fastening.

Removing the dividing panel (depending on the model)

The dividing panel in the freezer basket can be removed for cleaning:

The dividing panel is secured to the freezer basket with brackets.

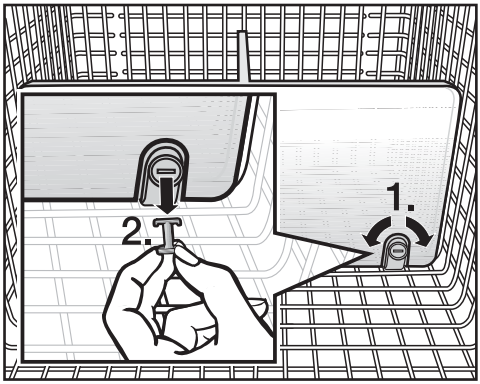

- Pull the freezer basket out as far as it will go.
- To release the brackets, use a suitable object to turn the slots in the pegs to a horizontal position (1.).
- Remove the pegs from the brackets (2.).
- Pull the dividing panel upwards to remove it.
- To reinsert the partition wall, place the brackets in an upright position, and position the dividing panel into the brackets so that you hear it click into place.
- Insert the pegs into the brackets, and use a suitable object to turn the slots in the pegs into a vertical position.
- Push the freezer basket all the way back in.

Removing the ice cube tray

The ice cube tray can be removed for cleaning:

- Open the lower appliance door as wide as possible.
- Tilt the ice cube tray forwards and pull it up and out to remove it.

Ice cube production does not stop when the ice cube tray has been removed. Ice cubes can fall into the freezer basket underneath.

Only remove the ice cube tray for the shortest time possible or switch off the Ice Maker beforehand (see “Switching off the Ice Maker” in “Making ice cubes”).

Storing food in the refrigerator section

Always observe USDA food safety guidelines.

⚠ Risk of fire from electrical appliances.

Operating electrical devices in the appliance can cause sparks to form.

Do not operate any electrical devices inside the appliance.

⚠ Risk of explosion due to flammable mixes of gases.

Electrical components can cause flammable mixes of gases to ignite.

Do not store any explosive materials or products containing flammable propellants (e.g., spray cans) in the appliance. The spray cans in question can be identified by the contents printed on the can or by a flame symbol. Electrical components can cause escaping gases to ignite.

⚠ Risk of damage due to greasy or oily foods.

If storing food which contains a lot of fat or oil in the appliance or the door, make sure that it does not come into contact with plastic components as this could cause stress cracks or break the plastic.

Make sure that no fat or oil leaks onto the plastic parts of the appliance.

Different storage zones

Due to natural air circulation, there are different temperature zones in the refrigerator section.

Cold, heavy air sinks to the lowest section of the refrigeration section. Make use of the different zones when placing food in the appliance.

Tip: To allow air to circulate efficiently, do not pack food too closely together in the refrigerator.

If there is insufficient air circulation, the cooling performance will decrease and energy consumption will increase.

Do not cover the fan in the rear wall of the appliance.

Tip: Do not store food in such a way that it touches the rear wall of the refrigerator section as it may freeze to the rear wall.

This appliance has DynamicCooling, which helps to keep an even temperature when the fan is running. When DynamicCooling is turned on, the difference between the various zones is less pronounced.

Warmest area

The warmest area in the refrigerator section is in the top section of the door. Use this for storing butter so that it remains spreadable and cheese so that it retains its flavor.

Coldest area

The coldest area in the fridge zone is directly above the MasterFresh zone and at the back of the appliance. The temperature in the dry compartment of the MasterFresh zone is even colder.

Use this area in the fridge zone and in the dry compartment of the MasterFresh zone for all delicate and highly perishable food, e.g.:

- fish, meat, poultry
- cold cuts, ready-made meals
- dishes or baked goods containing eggs or cream
- fresh dough, cake mixtures, pizza dough, or pie dough
- raw milk cheese and other raw milk products
- pre-packed vegetables and other fresh food with a best-before date that requires storage at a temperature of at least 39°F (4°C)

Tip: This compartment is ideal for all home-cooked meals as any micro-organisms that may still be present cannot multiply.

Food which is not suitable for storage in the fridge zone

Not all food is suitable for refrigeration at temperatures below 40°F (5°C) because it is sensitive to cold.

Foods which are sensitive to cold include:

- pineapples, avocados, bananas, pomegranates, mangoes, melons, papayas, passion fruit, citrus fruits such as lemons, oranges, mandarins, grapefruits
- fruit (which is not yet ripe)
- eggplant, cucumbers, potatoes, peppers, tomatoes, zucchini
- hard cheeses (e.g., Parmesan)

Storing food in the refrigerator section

Notes on buying food

The freshness of the food when it is first placed in the appliance is the most important factor for how long it stays fresh.
Take into account the use-by date and the correct storage temperature.
Time out of the fridge, e.g., transporting food in a warm car, should be kept to a minimum.

Storing food correctly

Ensure that food stored in the fridge zone is in packaging or covered properly (some exceptions apply in the MasterFresh zone). This will prevent food smells from affecting other food, food from drying out, and also any cross-contamination of bacteria. This is particularly important when storing meat products. Make sure that foods such as raw meat and fish in particular do not come into contact with other food.
By ensuring that the temperature settings are correct and by taking appropriate hygiene measures you can prolong the storage life of your food considerably and avoid food waste.

MastertFresh zone

The MastertFresh zone provides ideal storage conditions for fruit, vegetables, fish, meat, and dairy products. Food stays fresh considerably longer while retaining both flavor and vitamins.

The MasterFresh zone comprises a humidity-controlled and a dry compartment.

- Depending on the moisture-regulator setting, the **humidity-controlled compartment** is particularly suitable for **storing fruit and vegetables**.
- The **dry compartment** is suitable for **storing perishable foods** such as fish, meat, and dairy products.
  Any type of food can in fact be stored in this compartment, as long as it is packaged.

	Max. load of the humidity-controlled compartment	**Max. load of the dry compartment**
KF 28x2 Vi /SF	23 lb (10.5 kg)	31 lb (14 kg)
KF 29x2 Vi /SF	30 lb (13.5 kg)	40 lb (18 kg)

Humidity-controlled compartment with moisture adjustment



The moisture released by food in storage is kept within the humidity-controlled compartment drawer. The closer the air humidity in the humidity-controlled compartment is to the humidity content of the food, the crisper and fresher the food remains over a longer period, as the water content of the food is largely retained.

The moisture level greatly depends on the type and quantity of food being stored, if stored unwrapped.

The temperature in the humidity-controlled compartment is approximately equivalent to the temperature in the conventional fridge zone.

Remember that the fresher the food when it is placed in the appliance, the longer it will stay fresh.

The moisture regulator is used to regulate the amount of moisture in the humidity-controlled compartment with settings ◊ to ◊◊◊.

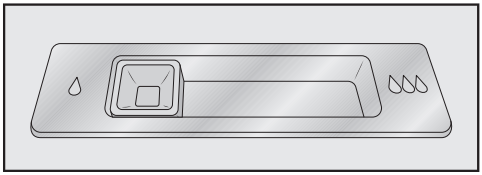

Position of the moisture regulator ◊ = slightly increased humidity

Select this setting ◊ if you store **very large quantities** of fruits and vegetables in the humidity-controlled compartment. The moisture regulator partially closes the vents in the compartment so that some of the moisture present is retained.

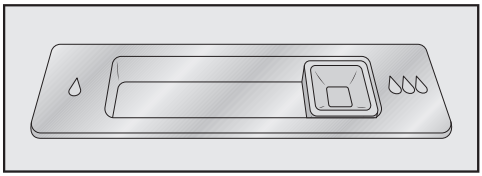

Position of the moisture regulator ◊◊◊ = increased humidity

Select this setting ◊◊◊ if you store **small to large quantities** of fruits and vegetables in the humidity-controlled compartment. The moisture regulator closes the vents in the compartment completely so that all of the moisture present is retained.

Tip: If the humidity level is too high and a lot of moisture has collected in the compartment, select the ◊ setting.
If the quantity of food being stored in this compartment is small, the moisture level may be too low. If you are only storing a small amount of food, wrap it in airtight packaging.

Increased moisture in the humidity-controlled compartment can, in some circumstances, cause a build-up of condensate.

Wipe off any condensate with a cloth.

Regulating the humidity level in the humidity-controlled compartment

- Slide the moisture regulator to the left ◊ or right ◊◊◊ depending on the setting required.

Dry compartment with low temperature

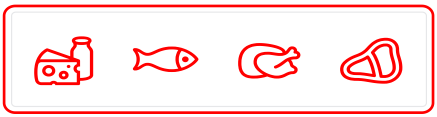

The temperature in the dry compartment is maintained at 30 to 37°F (-1 to 3°C). While lower than the temperature in a standard fridge zone, this is the optimum temperature range for storing fresh food which is not sensitive to cold.

The deterioration process is decelerated at this temperature range so food can be stored without loss of freshness for considerably longer than in a standard fridge and you do not need to shop as often.

The humidity level is similar to that in the conventional fridge zone.

Tip: This compartment is ideal for all home-cooked meals as any micro-organisms that may still be present cannot multiply.

The dry compartment is ideal for storing perishable foods such as:

- dairy products such as yogurt, cheese, cream, etc.
- deli salads
- meat, poultry, and sausage
- fresh fish and shellfish
- Any type of food can in fact be stored in this compartment, as long as it is packaged.

Please note that foods rich in protein deteriorate faster than others. Shellfish, for example, deteriorates faster than fish, and fish deteriorates faster than meat.

For hygiene reasons, always keep these foods **covered or wrapped** in this compartment.

In addition, the food will be protected against drying out.

Take food out of the dry compartment approximately 30 to 60 minutes before using it. The aroma and taste do not fully develop until the food has reached room temperature.

At high room temperatures, delicate food should preferably be kept in the fridge zone for a period of time.

Storing food in the MasterFresh zone

The following tips may help if you find that food you have stored does not keep well (for example, the food wilts or becomes withered after only a short storage time):

- Only place fresh food in the appliance as the initial condition of the food is crucial to maintaining freshness.
- Clean the MasterFresh zone before storing food in it.
- Very wet food should be dried off before storing it in the humidity-controlled compartment.
- Do not store food which is sensitive to cold in the dry compartment (see “Food which is not suitable for storing in the Fridge Zone”).
- Allocate the appropriate settings to food you wish to store (e.g., humid or dry storage).
- Store food loose in the humidity-controlled compartment.
  A high humidity level in the humidity-controlled compartment is achieved by the moisture present in the food being stored.
  If the humidity level is not high enough (e.g., too little food is being stored), it can be increased by placing a damp sponge in the drawer.
- If you think that the temperature in the dry compartment is too high or too low, adjust the temperature in the Fridge Zone (see “Setting the temperature” in “The correct temperature”). If ice crystals start to form on the floor of the dry compartment, increase the temperature as otherwise the cold temperature will damage the food.
- If too much water collects at the bottom of the humidity-controlled compartment, dry it with a cloth. If necessary, dry food before placing it in the appliance or place a rack at the bottom of the humidity-controlled compartment to allow water to drain off.

Always observe USDA food safety guidelines.

⚠ Risk of fire from electrical appliances.
Operating electrical devices in the appliance can cause sparks to form.
Do not operate any electrical devices inside the appliance.

Maximum freezing capacity

To ensure that fresh food placed in the freezer freezes through to the core as quickly as possible, the maximum freezing capacity must not be exceeded. The maximum freezing capacity for freezing within a 24-hour period is given on the data plate: “Freezing capacity ... lbs/24 hrs”.

What happens when you freeze fresh food?

Fresh food should be frozen as quickly as possible so that the nutritional value of the food, its vitamin content, appearance and flavor are maintained.

Food which takes a long time to freeze will lose more water from its cells, which then shrink. During the defrosting process, only some of this water is reabsorbed by the cells. What this means in practice is that the food loses more moisture. You can see this in the large amount of water that collects around the food when it defrosts.

If food is frozen quickly, the cells have less time to lose moisture, so they shrink less. As there is not so much moisture loss, it is easier for the food to reabsorb it during the defrosting process, and very little water collects around the defrosted food.

Storing frozen food

Never re-freeze partially or fully defrosted food. Defrosted food must only be re-frozen after it has been cooked.

When buying frozen food to store in your freezer, make sure to check:

- that the packaging is not damaged
- the expiration date
- the temperature at which the frozen food is being stored in the store

  The length of time food can be kept is reduced if it has been stored at a temperature warmer than 0°F (-18°C).

■ Buy frozen food at the very end of your shopping trip.

■ Store it in the freezer compartment as soon as possible.

Home freezing

Only freeze food that is fresh and in good condition.

Tips for home freezing

- The following types of food are **suitable for home freezing**:
  fresh meat, poultry, game, fish, vegetables, herbs, fresh fruit, dairy products, baked goods, leftovers, egg yolks, egg whites, and a range of precooked meals.
- The following types of food **are not suitable for freezing**:
  lettuce, radishes, sour cream, mayonnaise, whole eggs in their shells, onions, whole raw apples and pears.
- To retain color, taste, aroma, and vitamin C, vegetables should be blanched before they are frozen. To do so, place them portion by portion into boiling water for 2–3 minutes. Then, remove and plunge the vegetables into ice-cold water to cool quickly. Leave the vegetables to drain.
- Lean meat freezes better than fatty meat and can be stored for considerably longer.
- Separate chops, steaks, cutlets, etc. with a sheet of plastic freezer film. to prevent them from freezing together in a block.
- Do not season raw food or blanched vegetables with herbs or salt before freezing. Cooked food should only be lightly seasoned. The flavor of some herbs intensifies when frozen.

- Placing hot food or drink in the freezer causes food that is already frozen to partially thaw and increases energy consumption. Allow hot food and drink to cool down before placing it in the freezer.

Packaging food for freezing

■ Freeze food in portions.

– Suitable packaging

- Plastic films
- Freezer bags
- Aluminum foil
- Freezer containers

– Unsuitable packaging

- Packing paper
- Parchment paper
- Cellophane
- Garbage bags
- Plastic shopping bags

■ Remove as much air as possible from the packaging before sealing.

■ Close the packaging tightly with

- rubber bands,
- bag clips,
- string or bag ties, or
- freezer tape.

Tip: Freezer bags and poly tubing may also be sealed using home heat sealing kits.

■ Label the packaging with the contents and the date of freezing.

Before placing food in the freezer

■ When freezing more than 4.4 lb (2 kg) of fresh food, switch on the SuperFrost function for 24 hours before placing the food in the freezer (see “Using Automatic SuperCool and SuperFrost”).

This helps frozen food which is already stored in the freezer to stay frozen.

Placing food in the freezer

Food to be frozen can be placed anywhere in the freezer zone.
Place large quantities of food in the large freezer basket.

- Place the frozen food flat in the bottom of the basket so that it freezes through to the core as quickly as possible.
- Fill the top freezer basket first as the food will freeze quickest here.
- Ensure that the packaging and containers are dry to prevent them from freezing together or to the walls.
- Please follow the guidelines in the table below regarding recommended weights for the baskets:

	Upper freezer basket	**Lower freezer basket**
KF 28x2 Vi/ SF	26.5 lb (12 kg)	62 lb (28 kg)
KF 29x2 Vi/ SF	40 lb (18 kg)	79 lb (36 kg)

Unfrozen food should not touch frozen food as this will cause the frozen food to begin to thaw.

Storage time for frozen food

The storage life of food is very variable, even at a constant temperature of 0°F (-18°C). Decomposition processes also take place in frozen food, albeit at a very reduced speed. Fat can become rancid from contact with oxygen in the air, for example. This is why lean meat can be stored approx. twice as long as fatty meat.

The storage times quoted are guide values for the storage life of different food groups in the Freezer Zone.

Food group	**Storage time (Months)**
Ice cream	2 to 6
Bread, baked goods	2 to 6
Cheese	2 to 4
Fish, oily	1 to 2
Fish, lean	1 to 5
Sausage, ham	1 to 3
Game, pork	1 to 12
Poultry, beef	2 to 10
Vegetables, fruit	6 to 18
Herbs	6 to 10

Where the storage time given on the packaging differs, follow the advice on the packaging.

Defrosting frozen goods

Never re-freeze partially or fully defrosted food. Defrosted food may only be re-frozen after it has been cooked.

Frozen food can be defrosted in different ways:

- In a microwave
- In an oven using “Convection” or the “Defrost” setting
- At room temperature
- In the Fridge Zone (the cold given off by the frozen food helps to keep the other food cold)
- In a steam oven

Flat pieces of partially thawed meat or fish can be placed directly into a hot skillet.

Meat and poultry (e.g., hamburgers, chicken, fish) should not come into contact with other foods while defrosting. Catch the defrosting liquid and dispose of it carefully.

Fruit can be thawed at room temperature, either in the packaging or in a covered bowl.

Most vegetables can be cooked while still frozen. Just put straight into boiling water or hot grease. The cooking time is slightly less than that of fresh vegetables due to changes in the cell structure.

Cooling drinks quickly

When chilling drinks in the freezer, make sure that bottles are not left in for **more than one hour**. Otherwise they could burst.

Making ice cubes

For the automatic ice cube maker to operate, it must be connected to a water supply (see “Installation – Water supply”).

⚠ Risk to health due to contaminated water.

Consuming polluted water can lead to illnesses.

The first 3 batches of ice cubes made after the ice cube maker is started up must not be consumed, as the water will have been used for the initial rinsing of the water supply line.

This applies to the initial commissioning as well as when using the appliance again after it has been turned off for a long while.

Turning on the ice maker

- Make sure that the ice cube container is correctly located underneath the ice maker.
- In Settings mode ⚙, use the < and > sensor controls to select the Dispenser Unit and select *OK* to confirm your selection.
- Use the < and > sensor controls to select On and select *OK* to confirm your selection.

Once the freezer zone has cooled down to its set temperature, the ice maker will fill with water.

As soon as the water is frozen, the ice cubes drop out of the ice maker into the ice cube container.

Ice cube production is halted automatically as soon as the ice cube container is full.

The ice maker can make up to approx. 3 lb (1.3 kg) of ice cubes in 24 hours.

The amount of ice cubes made by the appliance depends on the temperature in the freezer zone. **The lower the temperature, the more ice cubes are produced.**

After the setting up the appliance for the first time, it can take up to 10 hours for the first ice cubes to drop out of the ice maker and collect in the ice cube container.

⚠ Risk of damage due to blocking of the ice maker.

The ice maker could become blocked and, as a result, be damaged.

Do not place any bottles or food into the ice cube container to chill them quickly.

Empty the ice cube container at regular intervals, or at least if you have not produced any ice for more than a week. This will ensure that you always have fresh ice and the ice cubes will not form a clump.

Ice cube production does not stop when the ice cube container has been removed. Ice cubes can fall into the freezer basket underneath.

Only remove the ice cube container **for the shortest possible time** or switch off the ice maker before removing it.

Turning off the ice maker

The ice maker can be turned off independently of the freezer zone if you do not want to make any ice cubes.

- Close the faucet in the water supply line (approx. 3 hours before switching off the appliance to avoid the build-up of bacteria caused by stagnant water).
- In Settings mode ⚙, use the < and > sensor controls to select the Dispenser Unit and select *OK* to confirm your selection.
- Use the < and > sensor controls to select Off and select *OK* to confirm your selection.

⚠ WARNING! DANGER of injury and damage!

Do not use any mechanical or other types of aids which are not recommended by the manufacturer to accelerate the defrosting process.

Refrigerator section and MasterFresh drawer

The refrigerator section and the MasterFresh drawer defrost automatically.

Condensate and frost can build up on the back wall of the refrigerator section and the MasterFresh drawer while in use. You do not need to remove this, as it will defrost and evaporate automatically with the warmth generated by the appliance.

Freezer Zone

The appliance is equipped with a “NoFrost” system. The freezer defrosts automatically.

The moisture generated in the appliance collects on the condenser and is automatically defrosted and evaporates periodically.

This automatic defrosting system enables the freezer to remain permanently ice-free. However, the food stored in the freezer will not defrost.

⚠ WARNING! DANGER of electric shock!
Unplug the appliance or trip the circuit breaker.

⚠ WARNING! Fire hazard!
Do not damage the coolant pipework.

Do not let water get into the electronic or the lighting.

⚠ Risk of damage due to moisture penetration.
The steam from a steam cleaner can damage plastic and electrical components.
Do not use a steam cleaner to clean the refrigeration appliance.

The data plate located inside the interior cabinet of the refrigeration appliance must not be removed. It contains information which is required in the event of a service call.

Cleaning agents

To avoid damaging the surfaces of your appliance, **do not** use:

- cleaning agents containing soda, ammonia, acids, or chloride
- cleaning agents containing lime scale remover
- abrasive cleaning agents, such as scouring powder, scouring liquid, or pumice stones
- cleaning agents containing solvents
- stainless steel cleaning agents
- dishwasher cleaner
- oven sprays
- glass cleaner
- hard, abrasive sponges and brushes, such as pot scrubbers
- eraser sponges
- sharp metal scrapers

Cleaning and conditioning agents used in the interior cabinet of the refrigeration appliance must be food safe.

We recommend using lukewarm water and a little liquid dish soap for cleaning.

Before cleaning the appliance

- Turn the appliance off completely by pressing the On/Off switch.
- Take any food out of the appliance and store it in a cool place.
- Take out all other removable parts for cleaning (see “Adjusting the interior fittings”).

Interior and accessories

Clean the appliance regularly, or at least once a month.

Clean up any spills, stains, or food immediately. Do not allow them to dry and stick to the appliance.

- Clean the appliance with a solution of lukewarm water and liquid dish soap. Rinse all parts by hand. Do not wash in a dishwasher.
- After cleaning, wipe with clean water and dry with a soft cloth.
- Leave the door open to air the appliance sufficiently for a short while and to prevent odor buildup.

Aluminum frames

The frames to the shelves inside the appliance and the door shelves are partially made from aluminum.

Aluminum is a dynamic material. The reflection and appearance of aluminum changes in different lights and environments and depending on the angle you observe it from. It is also susceptible to scratching.

The aluminum frames may become discolored or damaged if soiling is left on for too long. Remove any soiling immediately.

Appliance front

The appliance front has a special high-quality finish (Clean Touch Steel). This is resistant to soiling and is very easy to clean.

⚠ **Do not use stainless steel cleaning agent** on these surfaces, as it will damage the finish.

Do not use Miele stainless steel conditioning agent on these surfaces, as it will cause noticeable smearing.

If soiling is allowed to sit for any length of time, it may become impossible to remove.

Surfaces may become discolored or damaged.

It is therefore best to remove soiling from the appliance front immediately.

All surfaces are easily scratched. Contact with unsuitable cleaning agents can alter or discolor the surfaces.

See the information on “Cleaning agents” at the beginning of this section.

- Clean the surfaces with a clean sponge and a solution of warm water and liquid dish soap. A clean, damp microfiber cloth without cleaning agent can also be used for cleaning.
- After cleaning, wipe with clean water and dry with a soft cloth.

Cleaning the door seal

⚠ Risk of damage as a result of incorrect cleaning.

If you treat the door seal with oil or grease, it can become porous.

Do not use oil or grease on the door seal.

- The door seals should be cleaned regularly with clean water, and then wiped dry with a soft cloth.

Cleaning the ventilation gaps

A build-up of dust will increase the energy consumption of the appliance.

- The ventilation gaps should be cleaned on a regular basis with a brush or vacuum cleaner (you could use a Miele Vacuum Cleaner dust brush, for example).

Cleaning the water filter (IntensiveClear 2.0 mesh filter) (see “Optional accessories”)

Depending on the quantity of ice cubes produced, the IntensiveClear 2.0 mesh filter must be cleaned approx. every 6 months.

You can use the Replace the water filter display on the display as a reminder to clean the water filter.

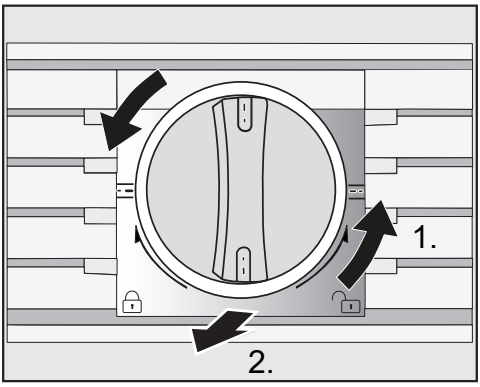

- Turn the cap of the filter cartridge counterclockwise until it is in the vertical position 1. and slide it out of the filter opening 2.

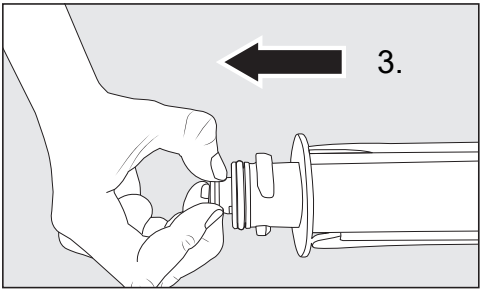

- Pull the mesh out of the back of the filter cartridge 3.

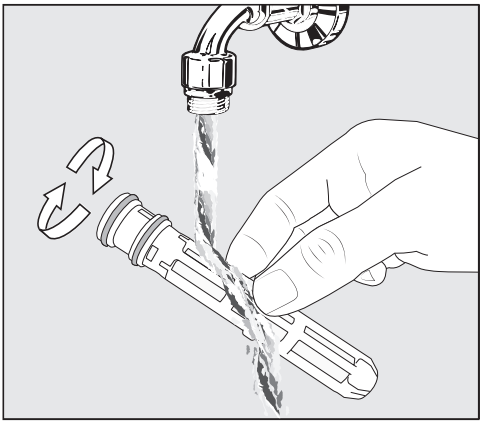

- Rinse the mesh under running lukewarm water. Turn the mesh over under the running water to clean it on all sides.

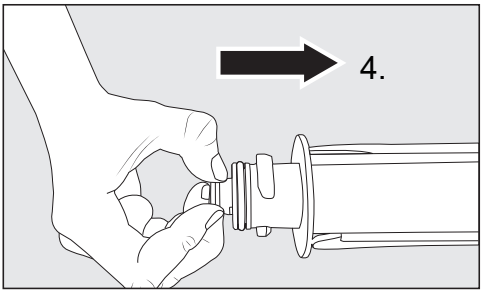

- Reinsert the mesh into the back of the filter cartridge 4.

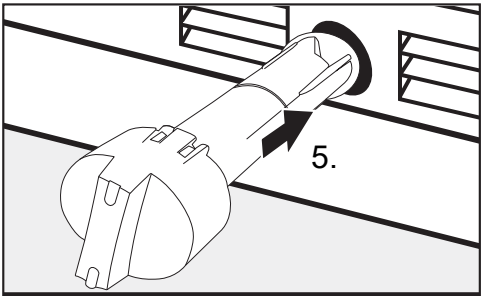

- Slide the filter cartridge as far as it will go into the filter opening 5., making sure the cap is vertical.

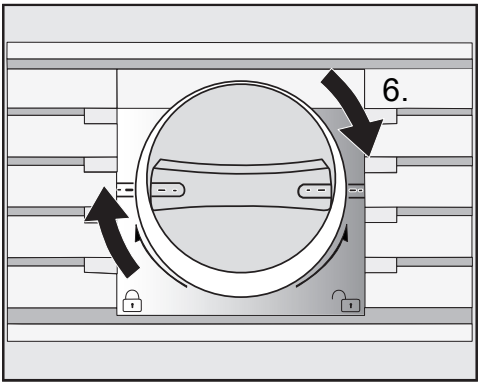

■ Turn the cap of the filter cartridge clockwise until it is in the horizontal position 6.

⚠ Risk of damage caused by water rushing out.
If the filter cartridge is not inserted correctly, there is a risk of water leaking out of the appliance.
When inserting the filter cartridge, be sure to turn it as far as the marker.

Once the IntensiveClear 2.0 mesh filter has been cleaned, the Water Filter Display must be reset using Settings mode on the display (see “Selecting additional settings – Resetting the Water Filter Display ”).

Replacing the Active AirClean filters

The Active AirClean filters in the refrigerator section need to be replaced approx. every 6 months.

Change Active AirClean Filter will appear on the display.

■ Confirm the message with *OK*.

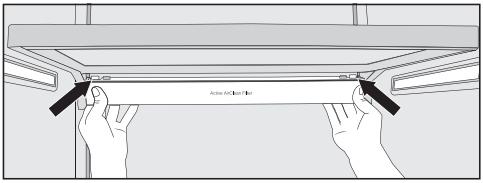

■ To remove the holder for the Active AirClean filters, press against the retainers on both sides of the holder from the rear and pull the holder downwards diagonally from the frame.

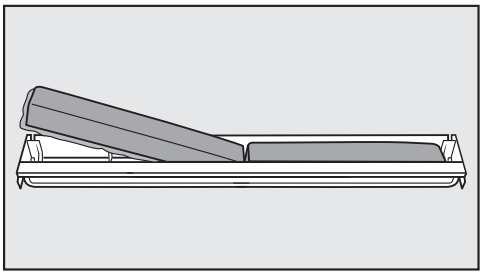

■ Remove the used Active AirClean filters and place the new Active AirClean filters with the surrounding edge pointing downwards in the holder.

■ To replace the holder, press against the retainers on both sides of the holder from the rear and clamp it into the gap on the frame from below.

The holder can be fixed under any shelf in the refrigerator section.

Once the Active AirClean filters have been replaced, the Active AirClean filter display must be reset using Settings mode on the display (see “Selecting additional settings – Resetting the Display Active AirClean Filter”).

New Active AirClean filters (both with and without a holder) can be obtained from Miele Service, your local dealer, or via the Miele website.

After cleaning

- Replace all shelves and accessories in the fridge zone.
- Switch the refrigeration appliance back on.
- Place food in the fridge zone and close the appliance doors.
- Switch on the SuperFrost function for a while so that the freezer zone can cool down quickly.
- Once the freezer zone has reached the required temperature, place the freezer baskets containing the frozen food back in the freezer zone.
- Switch off the SuperFrost function as soon as the temperature in the freezer zone is a constant 0°F (-18°C) or colder.

The appliance is supplied with a water filter (IntensiveClear 2.0 charcoal filter) that filters supply water for making ice cubes.

The IntensiveClear 2.0 charcoal filter improves the taste and smell of the ice cubes by removing chlorine and other substances from supply water.

However, to ensure the highest quality of the ice cubes, it is essential to change the IntensiveClear 2.0 charcoal filter regularly.

Please note:

- If an external water filter is attached to your household water supply, use an IntensiveClear 2.0 mesh filter in place of an IntensiveClear 2.0 charcoal filter (see Accessories – Optional accessories").
- After inserting a new water filter (IntensiveClear 2.0 mesh filter and IntensiveClear 2.0 charcoal filter), dispose of all ice cubes produced in the next 24 hours following the change.
- If you have not used the appliance or the ice maker much in the last few weeks or months, or if the ice cubes smell unpleasant, replace the IntensiveClear 2.0 charcoal filter or clean the IntensiveClear 2.0 mesh filter.

New water filters (IntensiveClear 2.0 mesh filters and IntensiveClear 2.0 charcoal filters) are available from Miele Customer Service, from your dealer, or via the internet.

Depending on the quantity of ice cubes produced, the IntensiveClear 2.0 charcoal filter must be changed approx. every 6 months.

Replace the water filter will appear on the display.

An audible signal also sounds.

■ Confirm the message with *OK*.

Changing the water filter

Air in the system can cause water to gush out and the filter cartridge to spring out when it is removed. Take great care when changing the water filter.

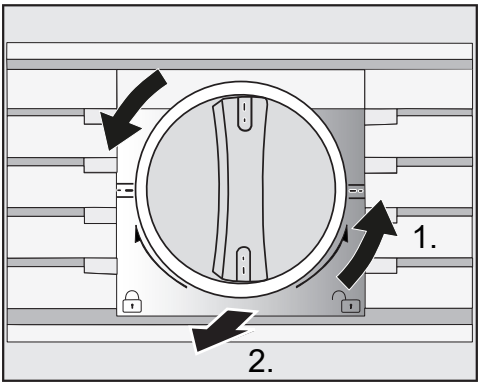

- Turn the cap of the filter cartridge counterclockwise until it is in the vertical position 1. and slide it out of the filter opening 2.
- Remove the safety cap from the new filter cartridge.

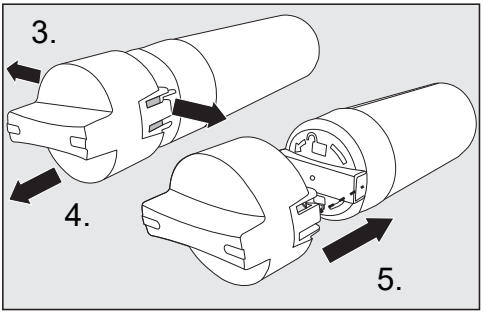

- Loosen the cap from the sides of the old filter cartridge 3. and remove the cap 4.
- Clip the cap onto the new filter cartridge 5.
- Empty the old filter cartridge.

Tip: The old filter cartridge can be disposed of with household trash.

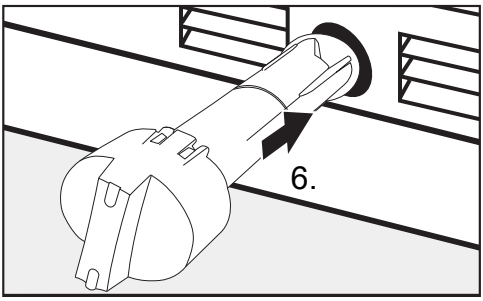

- Slide the filter cartridge as far as it will go into the filter opening 6., making sure the cap is vertical.

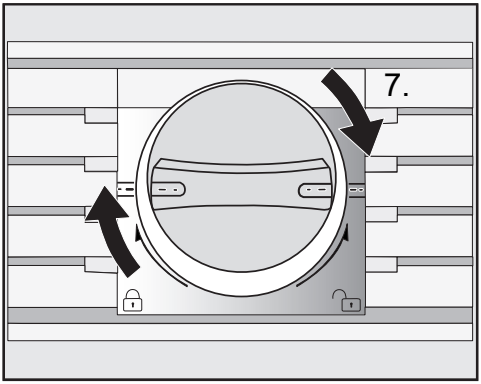

- Turn the cap of the filter cartridge clockwise until it is in the horizontal position 7.

⚠ Risk of damage caused by water rushing out.
If the filter cartridge is not inserted correctly, there is a risk of water leaking out of the appliance.
When inserting the new filter cartridge, be sure to turn it as far as the marker.

Once the IntensiveClear 2.0 charcoal filter has been replaced, the water filter display must be reset using Settings mode on the display (see “Selecting additional settings – Resetting the Water Filter Display ”).

After inserting a new water filter, dispose of all ice cubes produced in the next 24 hours following the change.

Using an external water filter

If an external water filter is attached to your household water supply, use an IntensiveClear 2.0 mesh filter in place of an IntensiveClear 2.0 charcoal filter.

Performance Data Sheet
Model: Miele 07134220
Use Replacement Cartridge 07134220

NSF System Trade name: WFS200MF & WFS210MF
NSF Replacement Cartridge No: WFC100MF (for WFS200MF) & WFC110MF (for WFS210MF)

System tested and certified by NSF International against NSF/ANSI Standard 42, 53, 401 for the reduction of the claims listed below.

This system has been tested according to NSF/ANSI 42, 53, 401 for reduction of the substances listed below. The concentration of the indicated substances in water entering the system was reduced to a concentration less than or equal to the permissible limit for water leaving the system, as specified in NSF/ANSI 42, 53, 401.

Substance	Influent challenge concentration	Average reduction	Reduction requirement	Max. permissible product water concentration
Chlorine taste and odor	2.0 mg/L ± 10%	97.2%	≥ 50%	N/A
Chloramine	3.0 mg/L ± 10%	97.2%	N/A	0.5 mg/L
Particulate, Class I particles ≥0.5 to <1 µm	at least 10,000 particles/mL	>99.9%	≥ 85%	N/A
Atrazine	0.009 mg/L ± 10%	>94.4%	N/A	0.003 mg/L
Benzene	0.015 mg/L ± 10%	>96.8%	N/A	0.005 mg/L
Carbofuran	0.08 mg/L ± 10%	>98.8%	N/A	0.04 mg/L
p-Dichlorobenzene	0.225 mg/L ± 10%	>99.8%	N/A	0.075 mg/L
Lead pH = 6.5	0.15 mg/L ± 10%	98.8%	N/A	0.010 mg/L
Lead pH = 8.5	0.15 mg/L ± 10%	97.9%	N/A	0.010 mg/L
Mercury pH = 6.5	0.006 mg/L ± 10%	>96.5%	N/A	0.002 mg/L
Mercury pH = 8.5	0.006 mg/L ± 10%	>96.6%	N/A	0.002 mg/L
Turbidity	11 ± 1 NTU	99.1%	N/A	0.5 NTU
Ethylbenzene	2.1 mg/L ± 10%	>99.9%	N/A	0.7 mg/L
Toxaphene	0.015 mg/L ± 10%	>93.3%	N/A	0.003 mg/L
Asbestos	10^7 to 10^8 fibers/L; fibers greater than 10 µm in length	>99%	99%	N/A
Cyst	minimum 50,000/L	99.99%	99.95%	N/A
Meprobamate	400 ng/L ± 20%	>95.2%	N/A	60 ng/L
Atenolol	200 ng/L ± 20%	>95.6%	N/A	30 ng/L
Carbamazepine	1,400 ng/L ± 20%	>98.6%	N/A	200 ng/L

Substance	Influent challenge concentration	Average reduction	Reduction requirement	Max. permissible product water concentration
DEET	1,400 ng/L ± 20%	>98.7%	N/A	200 ng/L
Phenytoin	200 ng/L ± 20%	>94.4%	N/A	30 ng/L
Metolachlor	1,400 ng/L ± 20%	>98.7%	N/A	200 ng/L
Ibuprofen	400 ng/L ± 20%	>95.3%	N/A	60 ng/L
Trimethoprim	140 ng/L ± 20%	>96.7%	N/A	20 ng/L
Linuron	140 ng/L ± 20%	>96.6%	N/A	20 ng/L
Naproxen	140 ng/L ±20%	>96.2%	N/A	20 ng/L
Estrone	140 ng/L ±20%	>96.3%	N/A	20 ng/L
Bisphenol A	2,000 ng/L ±20%	>99.0%	N/A	300 ng/L
Nonyl phenol	1,400 ng/L ±20%	>96.3%	N/A	200 ng/L

Tested using a flow rate of 0.55 gpm (2.0 L/min), pH of 7.5 ± 0.5, pressure of 60 psig, and temperature of 68 ± 5 °F.
NOTE : The testing was performed under standard laboratory conditions, actual performance may vary.

Operation conditions

Service flow rate	0.55 gpm (2 L/m)
Water pressure	30 psi – 125 psi (206 kPa – 861 kPa)
Water temperature	35 °F – 100 °F (2 °C – 38 °C)
Function	chemical/mechanical
Capacity	WFS200MF 250 gallons (946 L), WFS210MF 150 gallons (567 L)

Warning : Do not use with water that is microbiologically unsafe or of unknown quality without adequate disinfection before or after the system. Systems certified for cyst reduction may be used on disinfected water that may contain filterable cyst.

Notice :
- Adsorption media will not be regenerated and used.
- Systems must be installed and operated in accordance with manufacturer's recommended procedures and guidelines. The system and installation shall comply with applicable state and local regulations. Install on cold water line only.
- Flush 3 gallons through filter before use (flush approximately 5 minutes).
- To maintain proper filtration, replace the filter at least every 6 months.

Manufacturer :
Microfilter Co., Ltd., 162-1,Sansu, Deoksan, Jinchun, Chungbuk, Korea
Tel. No.: +82-43-531-7022

Water filter

Lead-free certificate



This product is tested and certified by WQA against NSF/ANSI 372 for “lead free” compliance.

Miele & Cie. KG
Carl-Miele-Strasse 29
D-33332 Gütersloh

With the help of the following guide minor faults in the performance of the machine, some of which may result from incorrect operation, can be remedied without contacting the Service Department.

This guide may help you to find the reason for the fault, and how to correct it.

To prevent cold from escaping, open the appliance doors as little as possible until the fault has been corrected.

Problem	Possible cause and solution
If you are concerned that your appliance is not working properly, you can perform a Self Test**. Your appliance will be checked for any faults or malfunctions.**	Any errors identified during the Self Test are shown on the display. ■ Perform a Self Test (see “Additional settings”, section “Performing a Self Test ☑”). ■ Contact Miele Service and inform them of the error message(s) on the display.
The appliance is not getting cold and the interior lighting does not come on when the appliance door is opened.	The appliance has not been turned on. ■ Turn the appliance on. The temperature appears in the display.
	The plug is not properly plugged into the electrical outlet. ■ Insert the plug into the outlet.
	The fuse has tripped. There could be a fault with the appliance, the household electrical wiring, or another appliance. ■ Contact a technician or the Miele Service department.

Problem	Possible cause and solution
The compressor is switching on more frequently and for longer periods of time, so the temperature in the appliance is dropping.	The ventilation slits in the cabinetry have been covered or become too dusty. ■ Do not block the ventilation slits. ■ Clean the ventilation slits on a regular basis.
	The doors have been opened too frequently, or a large amount of fresh food has been put in at once for storage or freezing. ■ Only open the doors when necessary and for as short a time as possible. After a while the temperature will return to normal by itself.
	The doors are not properly closed. A thick layer of ice may have formed in the freezer. ■ Close the appliance doors. After a while the temperature will return to normal by itself. If a thick layer of ice has formed, it will decrease the cooling capacity and increase the energy consumption. ■ Defrost the appliance and clean it.
	The room is too warm. The higher the room temperature, the longer the compressor has to run. ■ See “Installation location”.
	The appliance was not properly installed in the niche. ■ See “Installation - Building in the appliance”.
The compressor is switching on more frequently and for longer periods of time, so the temperature in the appliance is dropping.	The temperature setting is too low. ■ Correct the temperature setting.
	A large amount of food is being frozen at once. ■ See “Freezing and storing food”.
	The SuperCool function is still switched on. ■ To save energy, you can turn SuperCool off yourself.
	The SuperFreeze function is still switched on. ■ You can turn off the Automatic SuperCool function earlier to save energy.

Problem	Possible cause and solution
The compressor comes on less and less often and for shorter periods of time. The temperature in the appliance rises.	This is not a fault. The temperature setting is too high. ■ Correct the temperature setting. ■ Check the temperature again after 24 hours.
	The food begins to thaw. The ambient temperature is too low for this appliance. If the ambient temperature is too low, the compressor will run less frequently. This may cause the freezer to become too warm. ■ See the information in the section on “Installation – Installation location”. ■ Increase the ambient temperature.
The compressor runs continuously.	Not a fault. To save energy, the compressor runs at a lower speed when less cooling is required. This increases the compressor run time.
Food has frozen together or to the wall.	The food packaging was not dry when loaded in the freezer. ■ Use a blunt instrument (such as a spoon handle) to carefully pry them apart.
An alarm sounds.	The appliance doors have been open for longer than approx. 2 minutes. ■ Close the appliance doors.
No alarm sounds despite the appliance door being open.	You have switched off the audible signal. ■ Switch the audible signal back on using Settings mode ⚙.
	The Sabbath Mode function is switched on: the temperature display is dark and the symbol is shown on the display. ■ You can switch off Sabbath mode at any time (see “Selecting additional settings – Switching Sabbath Mode on or off”).
The appliance door cannot be opened.	The Pull2Open Door Assistant is switched on but the appliance has a handle-free cabinet front. ■ For handle-free cabinet fronts, switch on the Push2Open Door Assistant (see “Switching on the Door Assistant” in “Selecting additional settings”).

Frequently Asked Questions

Problem	Possible cause and solution
The lower appliance door cannot be opened.	The Door Assistant Push2Open is switched on; the lower appliance door cannot be opened. This is not a fault. With this refrigeration appliance, only the upper appliance door can be controlled via the Door Assistant.
The appliance door cannot be opened when Sabbath Mode is switched on.	The Push2Open Door Assistant is switched on at the same time as Sabbath Mode. ■ When Sabbath Mode is switched on, the Door Assistant is deactivated. ■ Pull the appliance door open from below or from the side.
The storage life of the food stored in the dry compartment of the MasterFresh zone is reduced.	The temperature in the dry compartment of the MasterFresh zone is possibly too high. The temperature in the dry compartment is controlled by the set temperature in the fridge zone. ■ Lower the temperature in the fridge zone (see “The correct temperature – Setting the temperature”).

Messages in the display

Message	Possible cause and solution
The warning sounds and the message Freezer temperature too high. Max. temperature °C **appears on the display.**	The temperature in the appliance has risen significantly. This could be due to, for example: – the appliance door being opened too often, or being left open – a large amount of food being frozen at once – an extended power failure ■ If you find the alarm disruptive, you can switch it off in advance by touching the *OK* sensor control. The alarm will stop. ■ Rectify the cause of the alarm. The message will disappear from the display and the alarm will stop. The temperature display will show the highest temperature that was reached during the time in which the temperature in the freezer zone rose. ■ Depending on the temperature displayed, you should check whether food in the freezer has started to thaw or has defrosted. If it has, cook it before freezing it again. ■ In the event of a power failure, check whether there are any ice cubes in the ice cube container and dispose of these. Otherwise, the ice cubes will freeze together and can damage the ice cube container when they expand.
The warning sounds and the message Close the door **appears on the display.**	The appliance door is open. ■ Close the appliance door. ■ If you wish to turn the alarm off early, touch the sensor control *OK* on the display. The alarm will stop.
The temperature display is dark and the symbol is shown on the display.	The Sabbath Mode function is switched on. The interior lighting is switched off and the refrigeration appliance is cooling down. ■ You can switch off Sabbath mode at any time (see “Selecting additional settings – Switching Sabbath Mode on or off”).

Message	Possible cause and solution
“F Please contact Miele Technical Service.**” appears in the display and an alarm sounds.**	There is a fault. ■ Make a note of the fault message if necessary. ■ Contact Miele Service. ■ To turn the alarm off, touch the 🔇 symbol. The error message does not disappear from the display until the error has been rectified.
	The voltage level is too high/low. ■ Observe the connection data under “Electrical connections”. ■ Contact Miele Service if necessary. ■ To turn the alarm off, touch the 🔇 symbol. The error message does not disappear from the display until the error has been rectified.
|▮ is shown in the display. The machine does not get cold, but the machine controls are working.	Demo Mode |▮ is switched on. Demo mode allows the appliance to be presented in the showroom without the cooling system being turned on. Do not activate this setting for domestic use. ■ Switch off Demo mode |▮ (see “Selecting additional settings”, section “Switching off Demo Mode |▮”).

Problems with the ice cube maker

Problem	Possible cause and solution
The ice maker is not producing any ice cubes.	The refrigeration appliance and the ice maker are not switched on. ■ Switch the refrigeration appliance and the ice maker on. ■ Check whether the water filter is inserted correctly.
	The plumbed water connection was not installed. ■ Make sure that the plumbed water connection was installed correctly.
	The water intake is not open or has not been vented. ■ Open the water intake. ■ Check that the water supply has been vented.
	There is a kink in the water hose. ■ Check the water hose and replace it if necessary.
	The temperature in the freezer zone is too high. ■ Select a lower temperature.
	The appliance door has been opened too frequently, causing the compressor to turn on more often and the ice maker has iced up. ■ Only open the appliance door when necessary and for as short a time as possible.
	The water connection pressure is too low. ■ Check that the water connection is between 29 psi and 116 psi (2 bar and 8 bar). ■ Check if an incorrect valve has been installed, making the pressure too low. **Remember that it can take up to 10 hours for the production of ice cubes to commence.**

Frequently Asked Questions

Problem	Possible cause and solution
The ice maker is only producing small ice cubes.	Several household appliances connected to the plumbed water connection are in operation, which has reduced the amount of water being taken in. ■ Avoid using the dishwasher, washing machine, etc. at the same time.
	The water filter is clogged. ■ Check whether the water filter needs to be replaced or cleaned.
	The water pressure is too low. ■ Check whether the water pressure is between 29 psi and 116 psi (2 bar and 8 bar). ■ Check if an incorrect valve has been installed.
The ice maker is producing only a few or deformed ice cubes.	The water filter is clogged. ■ Check whether the water filter needs to be replaced or cleaned.
	The water pressure is too low. ■ Check whether the water pressure is between 29 psi and 116 psi (2 bar and 8 bar).
	The temperature in the freezer zone is too high. ■ Select a lower temperature.
The ice cubes have an unpleasant odor or flavor.	The ice cube container is in constant use and needs to be cleaned regularly. ■ Check if the ice cube container is dirty and clean it if necessary.
	The ice maker is seldom used. If you do not use it very often, ice cubes that are stored for a long period can absorb the taste and smell of other items. ■ Empty and clean the ice cube container if you are not going to use it for a long time.
	There are unsealed food packages in the freezer zone. Ice can absorb the taste and smell of unsealed food. ■ Store only sealed food in the freezer zone.
	The water filter is dirty. ■ Check whether the water filter needs to be replaced or cleaned.

Problem	Possible cause and solution
Water is flowing out of the appliance.	The water intake is faulty. ■ Close the faucet immediately. ■ Check the water line for damage. ■ Contact Miele Customer Service. ■ Check whether the water connection pressure is too high.
	If the water connection pressure is too high, this can cause leaks (see “Installation – Plumbed water connection”). ■ Check that the water connection is between 29 psi and 116 psi (2 bar and 8 bar). ■ Check if an incorrect valve has been installed.

The interior lighting is not working.

Problem	Possible cause and solution
The interior lighting is not working.	The refrigeration appliance has not been turned on. ■ Turn the refrigeration appliance on.
	The Sabbath Mode function is switched on: the temperature display is dark and the symbol is shown on the display. ■ You can switch off Sabbath Mode at any time via the Settings mode.
	There is a fault. ⚠ Risk of electric shock due to exposed, live electrical components. When removing the lighting cover, there is a risk of coming into contact with live electrical components. Do not remove the lighting cover. The LED lighting may only be repaired or replaced by Miele Service. ⚠ Risk of injury from LED lighting. This lighting corresponds to risk group RG 2. If the cover is defective, there is a risk of eye injury. If the lighting cover is defective, do not look from a close range directly into the lighting with optical instruments (e.g., magnifying glass or similar). ■ Contact Miele Service.

Normal noises	Cause
Brrrrr...	A humming noise is made by the motor (compressor). This noise can get louder for brief periods when the motor switches on.
Blub, blub...	A gurgling noise can be heard when the coolant circulates through the pipes.
Click...	Clicking sounds occur whenever the thermostat switches the motor on or off.
Sssrrrrr...	You can sometimes just hear the sound of the fan inside the appliance.
Crack...	A cracking sound can be heard when materials expand inside the appliance.
Please bear in mind that a certain amount of noise is unavoidable (from the compressor and the coolant circulating through the system).	

Noises	Cause and solution
Rattling, clinking	The appliance is uneven. Realign the appliance using a level by raising or lowering the adjustable feet underneath the refrigeration appliance.
	The appliance is touching another machine or piece of cabinetry. Move it away.
	Drawers, baskets, or shelves are jiggling or are stuck. Check all removable parts and reinsert them correctly if required.
	Bottles or containers are touching each other. Separate them a little.

Contact in the event of a fault

In the event of a fault which you cannot remedy yourself, please contact your Miele dealer or Miele Customer Service.

You can book a Miele Service Call online at www.miele.com/service.

Contact information for Miele Customer Service can be found at the end of this document.

Please quote the model identifier and serial number of your appliance (SN) when contacting Miele Customer Service. Both pieces of information can be found on the data plate.

You will find the data plate inside your appliance.

Appliance warranty and product registration

You can register your product and/or view the manufacturer´s warranty terms and conditions for Miele appliances and vacuum cleaners at www.mieleusa.com.

Frequency range	2.412 GHz – 2.462 GHz
Maximum transmitting power	< 100 mW

Copyrights and licenses

Miele uses their own and third party software which is not subject to any so-called open source license for the operation and control of the device/appliance. This software/these software components are protected by copyright. The copyright powers of Miele and third parties have to be respected.

Furthermore, this device/appliance contains software components which are distributed under open source license conditions. Please refer to the document “Open Source Information and Licenses” for the Open Source components contained therein, together with the corresponding copyright notices, copies of the licensing conditions valid at the time, and any further information. The liability and warranty provisions of the open source licensing conditions as stated therein apply only in relation to the respective rights holders.

In particular, the device/appliance contains software components licensed by the copyright holders under the GNU General Public License, Version 2, or the GNU Lesser General Public License, Version 2.1. For a period of at least 3 years from the date of purchase or delivery of the device/appliance respectively, Miele offers to provide you or third parties with a machine-readable copy of the source code of the Open Source components contained in the device/appliance and licensed under the terms of the GNU General Public License, Version 2, or the GNU Lesser General Public License, Version 2.1, on a data carrier (CD-ROM, DVD or USB stick). Please contact us via e-mail (info@miele.com) or the below postal address and state the product name, the serial number and the date of purchase to obtain this source code.

Miele & Cie. KG
Open Source
GTZ/TIM
Carl-Miele-Straße 29
33332 Gütersloh

Please note the limited warranty in favor of the rights holders under the terms of the GNU General Public License, Version 2, and the GNU Lesser General Public License, Version 2.1:

This program is distributed in the hope that it will be useful, but WITHOUT ANY WARRANTY, without even the implied warranty of MERCHANTABILITY of FITNESS FOR A PARTICULAR PURPOSE. See the GNU General Public License and GNU Lesser General Public License for more details.

Please have the model and serial number of your appliance available when contacting Customer Service.

U.S.A.

Miele, Inc.

National Headquarters
9 Independence Way
Princeton, NJ 08540

Customer Service & Support
Phone: 888-99-MIELE(64353)
info@mieleusa.com
www.mieleusa.com

International Headquarters
Miele & Cie. KG
Carl-Miele-Straße 29
33332 Gütersloh
Germany

Canada

Importer
Miele Limited

Headquarters and Miele Centre
161 Four Valley Drive
Vaughan, ON L4K 4V8
www.miele.ca

Customer Care Centre
Phone: 800-565-6435
905-532-2272
customercare@miele.ca

Miele

KF 2802 SF, KF 2812 SF, KF 2902 SF, KF 2912 SF

en-US, CA

M.-Nr. 11 508 680 / 03