NEFF
cook. create. inspire.

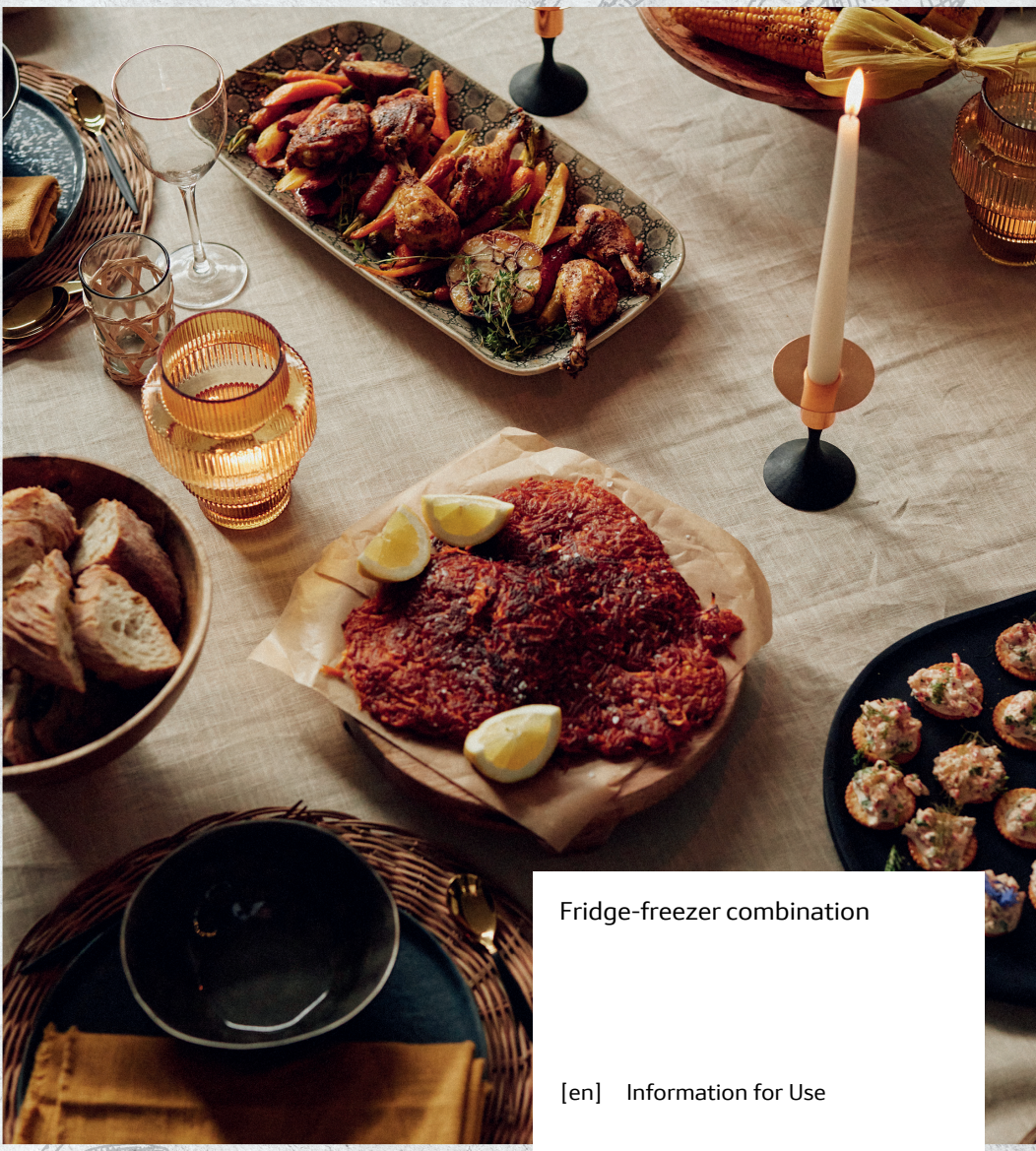

Fridge-freezer combination

[en] Information for Use

KI282..

You can find additional information and explanations online. Scan the QR code on the title page.



Table of contents

1 Safety 3
1.1 Definition of the signal words 3
1.2 General information 3
1.3 Intended use 4
1.4 Restriction on user group 4
1.5 Safe transport 4
1.6 Safe installation 4
1.7 Safe use 5
1.8 Damaged appliance 7

2 Preventing material damage 8

3 Environmental protection and saving energy 8
3.1 Disposing of packaging 8
3.2 Saving energy 8

4 Installation and connection 9
4.1 Scope of delivery 9
4.2 Criteria for the installation location 9
4.3 Installing the appliance 10
4.4 Preparing the appliance for the first time 10
4.5 Connecting the appliance to the electricity supply 10

5 Familiarising yourself with your appliance 11
5.1 Appliance 11
5.2 Control panel 12

6 Features 12
6.1 Shelf 13
6.2 Bottle shelf 13
6.3 Storage container 13
6.4 Fruit and vegetable container with humidity control 13
6.5 Butter and cheese compartment 14
6.6 Door tray 14
6.7 Variable door tray 14
6.8 Accessories 14

7 Basic operation 14
7.1 Switching on the appliance 14
7.2 Operating tips 14
7.3 Switching off the appliance 15
7.4 Setting the temperature 15

8 Additional functions 15
8.1 Super function 15
8.2 Rest mode 15

9 Alarm 16
9.1 Door alarm 16

10 Refrigerator compartment 16
10.1 Tips for storing food in the refrigerator compartment 16
10.2 Chill zones in the refrigerator compartment 16
10.3 "OK" sticker 16

11 Freezer compartment 17
11.1 Freezer compartment door ... 17
11.2 Freezing capacity 17
11.3 Tips for storing food in the freezer compartment 17
11.4 Tips for freezing fresh food ... 17
11.5 Shelf life of frozen food at –18 °C 18
11.6 Defrosting methods for frozen food 18

12 Defrosting 18
12.1 Defrosting in the refrigerator compartment 18
12.2 Defrosting in the freezer compartment 18

13 Cleaning and servicing 19
13.1 Preparing the appliance for cleaning 19

13.2 Cleaning the appliance 19
13.3 Cleaning the condensation channel and drainage hole ... 20
13.4 Removing the fittings 20
13.5 Removing appliance components 21
14 Troubleshooting 22
14.1 Power failure 24
14.2 Conducting an appliance self-test 25
15 Storage and disposal 25
15.1 Taking the appliance out of operation 25
15.2 Disposing of old appliance ... 25
16 Customer Service 26
16.1 Product number (E-Nr.) and production number (FD) 26
17 Technical data 26

⚠ 1 Safety

Observe the following safety instructions.

1.1 Definition of the signal words

This is where you can find explanations for the safety signal words used in this manual.

⚠ WARNING
This indicates that death or serious injuries may occur as a result of non-observance of this warning.

⚠ CAUTION
This indicates that minor or moderate injuries may occur as a result of non-observance of this warning.

ATTENTION
This indicates that damage to the appliance or other material damage may occur as a result of non-compliance with this warning.

Note: This alerts you to important information.

1.2 General information

- Read this instruction manual carefully.
- Keep the instruction manual and the product information safe for future reference or for the next owner.
- Do not connect the appliance if it has been damaged in transit.

1.3 Intended use

This appliance is only intended to be fully fitted in a kitchen.

Only use this appliance:

- for chilling and freezing food and for making ice cubes.
- in private households and in enclosed spaces in a domestic environment.
- Up to an altitude of 2000 m above sea level.

1.4 Restriction on user group

This appliance may be used by children aged 8 or over and by people who have reduced physical, sensory or mental abilities or inadequate experience and/or knowledge, provided that they are supervised or have been instructed on how to use the appliance safely and have understood the resulting dangers.

Do not let children play with the appliance.

Cleaning and user maintenance must not be performed by children unless they are being supervised.

Children above the age of three years old and younger than eight years old may load and unload the refrigerating appliance.

1.5 Safe transport

⚠ WARNING – Risk of injury!

The heavy weight of the appliance may result in injury when lifted.

- ▸ Do not lift the appliance on your own.

1.6 Safe installation

⚠ WARNING – Risk of electric shock!

Incorrect installation is dangerous.

- ▸ Connect and operate the appliance only in accordance with the specifications on the rating plate.
- ▸ Connect the appliance to a power supply with alternating current only via a properly installed socket with earthing.
- ▸ The protective conductor system of the domestic electrical installation must be properly installed.
- ▸ Never equip the appliance with an external switching device, e.g. a timer or remote control.

- When the appliance is installed, the mains plug of the power cord must be freely accessible. If free access is not possible, an isolating switch must be integrated into the permanent electrical installation according to the installation regulations.
- When installing the appliance, check that the power cable is not trapped or damaged.

If the insulation of the power cord is damaged, this is dangerous.

- Never let the power cord come into contact with heat sources.

⚠ WARNING – Risk of explosion!

If the appliance's ventilation openings are closed off, a leak in the refrigeration circuit may result in a flammable mixture of gas and air.

- Keep ventilation openings in the appliance casing or in the integrated casing clear of obstruction.

⚠ WARNING – Risk of fire!

It is dangerous to use an extended power cord and non-approved adapters.

- Do not use extension cables or multiple socket strips.
- Only use adapters and power cords approved by the manufacturer.
- If the power cord is too short and a longer one is not available, please contact an electrician to have the domestic installation adapted.

Portable multiple socket strips or portable power supply units may overheat and cause a fire.

- Do not place portable multiple socket strips or power supply units on the back of the appliance.

1.7 Safe use

⚠ WARNING – Risk of electric shock!

An ingress of moisture can cause an electric shock.

- Only use the appliance in enclosed spaces.
- Never expose the appliance to intense heat or humidity.
- Do not use steam- or high-pressure cleaners to clean the appliance.

⚠ WARNING – Risk of suffocation!

Children may put packaging material over their heads or wrap themselves up in it and suffocate.

- ▸ Keep packaging material away from children.
- ▸ Do not allow children to play with packaging material.

Children may breathe in or swallow small parts, causing them to suffocate.

- ▸ Keep small parts away from children.
- ▸ Do not let children play with small parts.

⚠ WARNING – Risk of explosion!

If the cooling circuit is damaged, flammable refrigerant may escape and explode.

- ▸ To accelerate the defrosting process, do not use any other mechanical devices or means other than those recommended by the manufacturer.
- ▸ If food is stuck to the freezer compartment, loosen it with a blunt object such as the handle of a wooden spoon.

Products which contain flammable propellants and explosive substances may explode, e.g. spray cans.

- ▸ Do not store products which contain flammable propellants (e.g. spray cans) or explosive substances in the appliance.

⚠ WARNING – Risk of fire!

Electrical devices within the appliance may cause a fire, e.g. heaters or electric ice makers.

- ▸ Do not operate electrical devices within the appliance.

⚠ WARNING – Risk of injury!

Containers that contain carbonated drinks may burst.

- ▸ Do not store containers that contain carbonated drinks in the freezer compartment.

Injury to the eyes caused by escaping flammable refrigerant and hazardous gases.

- ▸ Do not damage the tubes of the refrigerant circuit or the insulation.

⚠ WARNING – Risk of cold burns!
Contact with frozen food and cold surfaces may cause burns by refrigeration.
- ▸ Never put frozen food straight from the freezer compartment into your mouth.
- ▸ Avoid prolonged contact of the skin with frozen food, ice and surfaces in the freezer compartment.

⚠ CAUTION – Risk of harm to health!
To prevent food from being contaminated, you must observe the following instructions.
- ▸ If the door is open for an extended period of time, this may lead to a considerable temperature increase in the compartments of the appliance.
- ▸ Regularly clean the surfaces that may come into contact with food and accessible drain systems.
- ▸ Store raw meat and fish in suitable containers in the refrigerating appliance so that they do not touch or drip on other food.
- ▸ If the fridge/freezer is empty for an extended period of time, switch off the appliance, defrost it, clean it and leave the door open to prevent the formation of mould.

Metal or metal-style parts in the appliance may contain aluminium. If acidic food comes into contact with aluminium in the appliance, aluminium foil ions may pass into the food.
- ▸ Do not consume soiled food.

1.8 Damaged appliance

⚠ WARNING – Risk of electric shock!
If the appliance or the power cord is damaged, this is dangerous.
- ▸ Never operate a damaged appliance.
- ▸ Never pull on the power cord to unplug the appliance. Always unplug the appliance at the mains.
- ▸ If the appliance or the power cord is damaged, immediately unplug the power cord or switch off the fuse in the fuse box.
- ▸ Call customer service. →*Page 26*

Improper repairs are dangerous.
- ▸ Repairs to the appliance should only be carried out by trained specialist staff.
- ▸ Only use genuine spare parts when repairing the appliance.

- If the power cord or the appliance power cable of this appliance is damaged, it must be replaced with a special power cord or special appliance power cable, which is available from the manufacturer or its Customer Service.

⚠ WARNING – Risk of fire!



If the tubes are damaged, flammable refrigerant and harmful gases may escape and ignite.

- Keep naked flames and ignition sources away from the appliance.
- Ventilate the room.
- Switch off the appliance. →*Page 15*
- Unplug the mains plug from the mains or switch off the circuit breaker in the fuse box.
- Call customer service. →*Page 26*

2 Preventing material damage

ATTENTION

Using the base, runners or appliance doors as a seat surface or climbing surface may damage the appliance.

- Do not stand or support yourself on the base, runners or doors.

Contamination with oil or fat may cause plastic parts and door seals to become porous.

- Keep plastic parts and door seals free of oil and grease.

Metal or metal-style parts in the appliance may contain aluminium. When aluminium comes into contact with acidic foods, it corrodes and discolours.

- Only store packaged food in the appliance.

If you clean fittings and accessories in the dishwasher, this may cause them to become deformed or discolour.

- Never clean fittings and accessory in the dishwasher.

3 Environmental protection and saving energy

3.1 Disposing of packaging

The packaging materials are environmentally compatible and can be recycled.

- Sort the individual components by type and dispose of them separately.

3.2 Saving energy

If you follow these instructions, your appliance will use less power.

Selecting the installation location

- Keep the appliance out of direct sunlight.

- Install the appliance as far away as possible from heating elements, cookers and other heat sources:
  - Maintain a 30 mm clearance to electric or gas cookers.
  - Maintain a 300 mm clearance to oil or solid-fuel cookers.
- Never cover or block the external ventilation openings.

Saving energy during use

Note: The arrangement of the fittings does not affect the energy consumption of the appliance.

- Open the appliance only briefly and then close it carefully.
- Never cover or block the interior ventilation openings or the exterior ventilation openings.
- Transport purchased food in a cool bag and place in the appliance quickly.
- Allow warm food and drinks to cool down before storing them.
- Thaw frozen food in the refrigerator compartment to utilise the low temperature of the food.
- Always leave some space between the food and to the back panel.
- Defrost the freezer compartment regularly.
- Open the freezer compartment door only briefly and then close it properly.

4 Installation and connection

4.1 Scope of delivery

After unpacking all parts, check for any transport damage and for completeness of delivery.
If you have any complaints, contact your dealer or our after-sales service →*Page 26*.

The delivery consists of the following:

- Built-in appliance
- Equipment and accessories [1]
- Installation material
- Installation instructions
- User manual
- Customer service directory
- Warranty enclosure [2]
- Energy label
- Information on energy consumption and noises

4.2 Criteria for the installation location

⚠ WARNING
Risk of explosion!
If the appliance is in a space that is too small, a leak in the refrigeration circuit may result in a flammable mixture of gas and air.

- ▸ Only install the appliance in a space with a volume of at least 1 m^3 per 8 g refrigerant. The volume of refrigerant is indicated on the rating plate.
  → *"Appliance", Fig.* **1** / 6 *Page 12*

The weight of the appliance ex works may be up to 65 kg depending on the model.

[1] Depending on the appliance specifications
[2] Not in all countries

The subfloor must be sufficiently stable to bear the weight of the appliance.
This refrigerator is intended for use at ambient temperatures of 10 °C to 38 °C.
The appliance is fully functional within the permitted room temperature.
If the appliance is operated at colder room temperatures, the appliance will not be damaged up to a room temperature of 5 °C.

Niche dimensions

Observe the niche dimensions if you install your appliance in the niche. If this is not the case, problems may occur when installing the appliance.

Niche depth

Install the appliance in the recommended niche depth of 560 mm.
If the niche depth is smaller, the energy consumption increases slightly.
The niche depth must be a minimum 550 mm.

Niche width

An inside niche width of at least 560 mm is required for the appliance.

Over-and-under and side-by-side installation

If you want to install 2 refrigerating appliances one over the other or side by side, you must maintain a clearance of at least 150 mm between the appliances. Selected appliances can be installed without a minimum clearance. Ask your dealer or kitchen planner about this.

4.3 Installing the appliance

- ▸ Install the appliance in accordance with the enclosed installation instructions.

4.4 Preparing the appliance for the first time

1. Remove the informative material.
2. Remove the protective foil and transit bolts, e.g. remove the adhesive strips and carton.
3. Clean the appliance for the first time. →*Page 19*

4.5 Connecting the appliance to the electricity supply

1. Insert the appliance plug of the power cord into the appliance.
2. Insert the mains plug of the appliance's power cable in a socket nearby.
   The connection data of the appliance can be found on the rating plate.
   → *"Appliance", Fig.* **1**/6 *Page 12*
3. Check the mains plug is inserted properly.

✔ The appliance is now ready for use.

5 Familiarising yourself with your appliance

5.1 Appliance

You can find an overview of the parts of your appliance here.

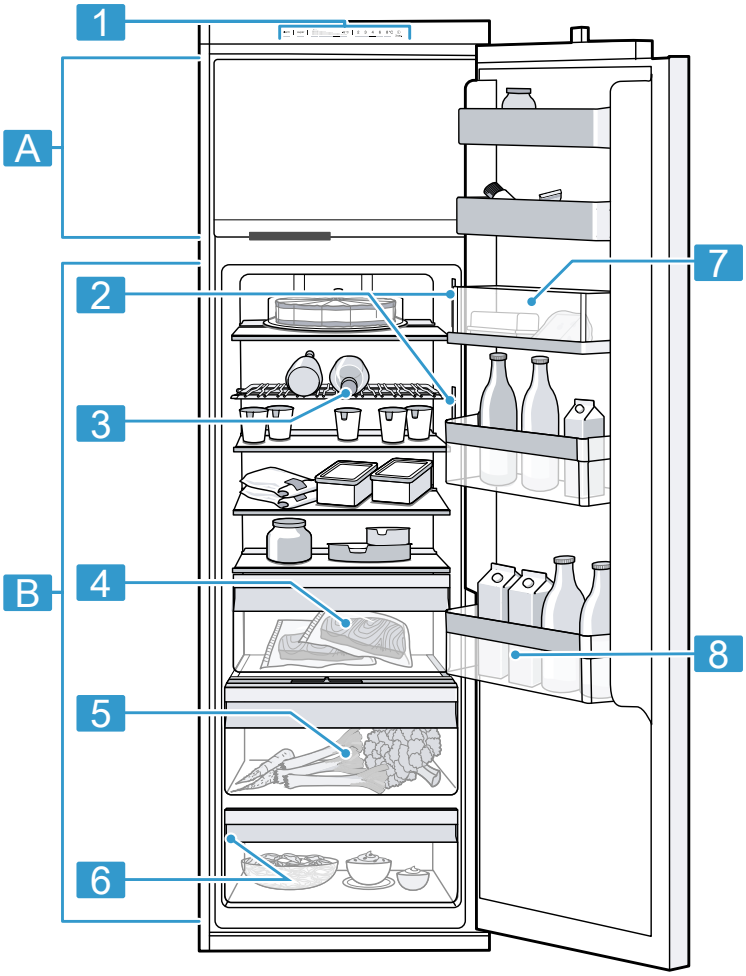

1

Deviations between your appliance and the diagrams may differ with regard to their features and size.

A	Freezer compartment →*Page 17*
B	Refrigerator compartment →*Page 16*

1	Control panel →*Page 12*
2	Lighting

3	Bottle shelf →*Page 13*[1]
4	Storage container →*Page 13*
5	Fruit and vegetable container with humidity control →*Page 13*
6	Rating plate →*Page 26*
7	Butter and cheese compartment →*Page 14*[1]
8	Door tray for large bottles →*Page 14*

5.2 Control panel

You can use the control panel to configure all functions of your appliance and to obtain information about the operating status.

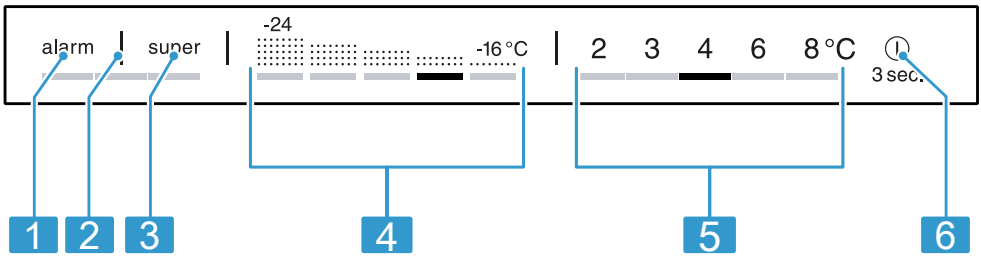

2

1	alarm switches the warning signal off.
2	l opens the menu for setting the rest mode. Is only visible if the function has been switched on in the appliance's menu.
3	super switches the Super function on or off.
4	Displays the set temperature for the freezer compartment in °C.
5	Displays the set temperature for the refrigerator compartment in °C.
6	⏻ 3 sec. switches the appliance on or off.

6 Features

The features of your appliance depend on the model.

[1] Depending on the appliance specifications

6.1 Shelf

To vary the shelf as required, you can remove the shelf and re-insert it elsewhere.
→ *"Removing the shelf", Page 20*

6.2 Bottle shelf

Store bottles securely on the bottle shelf.
To vary the bottle shelf as required, you can remove the bottle shelf and re-insert it elsewhere.
→ *"Removing the shelf", Page 20*

6.3 Storage container

The temperatures in the storage container are lower than in the refrigerator compartment. Temperatures below 0 °C may occur occasionally.
In order to reach temperatures close to 0 °C in the storage container, set the refrigerator compartment temperature to 2 °C. →*Page 15*
Use the lower temperatures in the storage container to store highly perishable food, e.g. fish, meat and sausages.

6.4 Fruit and vegetable container with humidity control

Store fresh fruit and vegetables loose in the fruit and vegetable container. Cover any chopped fruit and vegetables, or store in air-tight packaging.
You can adjust the humidity in the fruit and vegetable container using the humidity controller. This allows fresh fruit and vegetables to be stored for longer than with conventional storage.

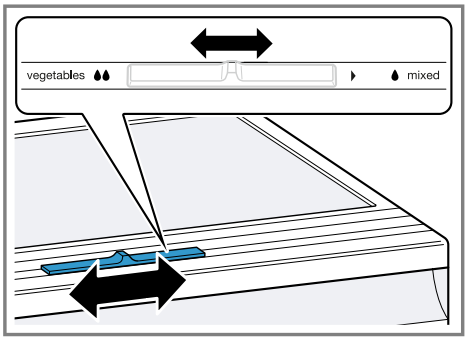

The air humidity in the fruit and vegetable container can be set according to the type and amount of food to be stored by moving the humidity controller:

- Move to the right for low humidity when primarily storing fruit or mixed items, or if the appliance is very full.
- Move to the left for high humidity when primarily storing vegetables or when the appliance is not very full.

Condensation may form in the fruit and vegetable container depending on the food and quantity stored. Remove the condensation with a dry cloth and adjust the air humidity to a lower setting using the humidity controller.
To ensure that the quality and aroma are retained, store fruit and vegetables that are sensitive to cold outside of the appliance at temperatures of approx. 8 °C to 12 °C, e.g. pineapple, bananas, citrus fruits, cucumbers, courgettes, peppers, tomatoes and potatoes.

6.5 Butter and cheese compartment

Store butter and hard cheese in the butter and cheese compartment.
To open the butter and cheese compartment, press down lightly on the centre of the flap.

Note: The compartment opens downwards. The flap slides under the compartment.

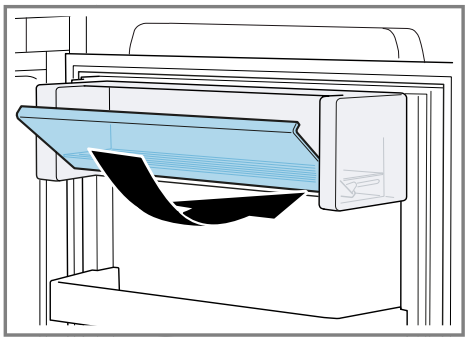

6.6 Door tray

To adjust the door tray as required, you can remove the door tray and re-insert elsewhere.
→ *"Removing door tray", Page 21*

6.7 Variable door tray

To adjust the variable door tray as required, you can move or remove the variable door tray, and re-insert it elsewhere.

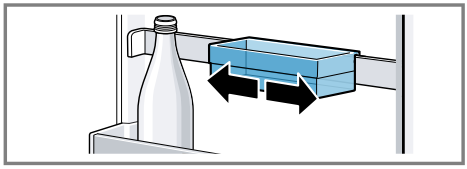

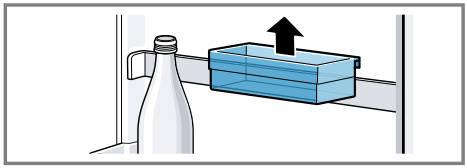

You can remove the door tray rail and re-insert it elsewhere.
→ *"Removing the door tray rail", Page 21*

6.8 Accessories

Use original accessories. These have been made especially for your appliance.
The accessories for your appliance depend on the model.

Egg tray

Store eggs safely on the egg tray.

7 Basic operation

7.1 Switching on the appliance

1. Electrically connect the appliance.
   → *Page 10*
   Note: If the appliance has been previously switched off using the control panel, press and hold ⏻ **3 sec.** for three seconds.
✔ The appliance is now ready for use.
✔ The appliance begins to cool.
2. Set the required temperature.
   → *Page 15*

7.2 Operating tips

- Once you have switched on the appliance, the set temperature is only reached after several hours. Do not put any food in the appliance until the set temperature has been reached.
- When closing the door, make sure that the door is not blocked by stored items.
- When you close the door, a vacuum may be created. The door is then difficult to open again. Wait a moment until the vacuum is offset.

- The temperature in the appliance varies due to the following conditions:
  - How often the appliance is opened
  - Load capacity
  - Temperature of newly stored food
  - Ambient temperature
  - Direct sunlight

7.3 Switching off the appliance

▸ Press and hold ⏻ **3 sec.** for 3 seconds.

7.4 Setting the temperature

Setting the refrigerator compartment temperature

▸ Press the required temperature. The recommended temperature in the refrigerator compartment is 4 °C.
→ *""OK" sticker", Page 16*

Setting the freezer compartment temperature

▸ Press the required temperature. **Note:** As the freezer compartment temperature depends on the refrigerator compartment temperature and the ambient temperature, the freezer compartment temperature may fluctuate from the set value. The recommended temperature in the freezer compartment is −18 °C.

8 Additional functions

Find out which additional functions can be used for your appliance.

8.1 Super function

With the Super function, the refrigerator compartment and the freezer compartment cool more intensively. Switch on the Super function 4 to 6 hours before placing food weighing 2 kg or more.
In order to utilise the freezing capacity, use the Super function.
→ *"Freezing capacity", Page 17*

Note: When the Super function is switched on, increased noise may occur.

Switching on Super function

▸ Press **super**.
✔ **super** lights up.

Note: After approx. 50 hours, the appliance switches to normal operation.

Switching off Super function

▸ Press **super**.

8.2 Rest mode

The rest mode switches off all non-essential functions.

During rest mode, the following functions are switched off:
- Alarm
- Interior lighting
- Signal tones
- Messages on the control panel

Note: The control panel lighting is switched off during rest mode. I lights up at a reduced brightness level.

Switching on rest mode

▸ Press and hold I between **alarm** and **super** for 15 seconds until an audible signal sounds.
✔ I lights up.

Note: After approx. 80 hours, the appliance switches to normal mode.

Switching off rest mode

- ▸ Press and hold | between **alarm** and **super** for 15 seconds until an audible signal sounds.

9 Alarm

9.1 Door alarm

If the appliance door is open for a while, the door alarm switches on. A warning tone sounds and **alarm** lights up.

Switching off the door alarm

- ▸ Close the appliance door or press **alarm**.
- ✔ The warning tone is switched off.

10 Refrigerator compartment

You can keep meat, sausage, fish, dairy products, eggs, prepared meals and pastries in the refrigerator compartment.
The temperature can be set from 2 °C to 8 °C.
The refrigerator compartment can also be used to store highly perishable foods in the short to medium term. The lower the selected temperature, the longer the food remains fresh.

10.1 Tips for storing food in the refrigerator compartment

- Only store food when fresh and undamaged.
- Store food covered or in air-tight packaging.
- To avoid impeding the circulation of air and to prevent food from freezing, do not place food so that it has direct contact with the back wall.
- Allow hot food and drinks to cool down first before placing in the appliance.
- Observe the best-before date or use-by date specified by the manufacturer.

10.2 Chill zones in the refrigerator compartment

The air circulation in the refrigerator compartment creates different chill zones.

Coldest zone

The coldest zone is between the arrow stamped on the side and the shelf underneath.

Tip: Store highly perishable food such as fish, sausages and meat in the coldest zone.

Warmest zone

The warmest zone is at the very top of the door.

Tip: Store food that does not spoil easily in the warmest zone, e.g. hard cheese and butter. Cheese can then continue to release its aroma and the butter will still be easy to spread.

10.3 "OK" sticker

The "OK" sticker lets you check whether the refrigerator compartment reaches the safe temperature ranges of +4 °C or colder recommended for food.
The "OK" sticker is not included with all models.
If the sticker does not indicate "OK", gradually reduce the temperature.
→ *"Setting the refrigerator compartment temperature", Page 15*

Once the appliance is switched on, it may take up to 12 hours until the set temperature is reached.

OK

Correct setting

11 Freezer compartment

You can store frozen food, freeze food and make ice cubes in the freezer compartment.
The temperature can be set from −16 °C to −24 °C.
Long-term storage of food should be at −18 °C or lower.
The freezer compartment can be used to store perishable food long-term. The low temperatures slow down or stop the spoilage.

11.1 Freezer compartment door

To ensure that the frozen food that is stored does not thaw and the freezer compartment is not covered in too much ice, always close the freezer compartment door.

Note: When you close the freezer compartment door, a vacuum may be created. The freezer compartment door is difficult to open again. Wait a moment until the vacuum is offset.

11.2 Freezing capacity

The freezing capacity indicates the quantity of food that can be frozen right through to the centre within a specific period of time.
Information on freezing capacity can be found on the rating plate.
→ *"Appliance", Fig. 1/6 Page 12*

Note: Approx. 24 hours before storing fresh food in the appliance, switch on Super function.
→ *"Switching on Super function", Page 15*

11.3 Tips for storing food in the freezer compartment

- Store food in air-tight packaging.
- Do not bring food which is to be frozen into contact with frozen food.
- Spread out the food over a wide area in the freezer compartment.

11.4 Tips for freezing fresh food

- Freeze fresh and undamaged food only.
- Freeze food in portions.
- Cooked food is more suitable than food that can be eaten raw.
- Vegetables: Wash, chop up and blanch before freezing.
- Fruit: Wash, pit and perhaps peel, possibly add sugar or ascorbic acid solution.
- Food that is suitable for freezing includes baked items, fish and seafood, meat, game, poultry, eggs without shells, cheese, butter and quark, ready meals and leftovers.
- Food that is unsuitable for freezing includes lettuce, radishes, eggs in shells, grapes, raw apples and pears, yoghurt, sour cream, crème fraîche and mayonnaise.

Packing frozen food

If you select suitable packaging material and the correct type of packaging, you can determine the product quality and prevent freezer burn.

1. Place the food in the packaging.
2. Squeeze out the air.

3. Pack food airtight to prevent it from losing flavour and drying out.
4. Label the packaging with the contents and the date of freezing.

11.5 Shelf life of frozen food at −18 °C

Food	Storage time
Fish, sausages, prepared meals and baked goods	up to 6 months
Poultry, meat	up to 8 months
Vegetables, fruit	up to 12 months

11.6 Defrosting methods for frozen food

⚠ CAUTION
Risk of harm to health!
During the thawing process, bacteria may multiply and spoil the frozen food.

- ▸ Do not refreeze food after it has been defrosted or started to defrost.
- ▸ Refreeze food only after cooking.
- ▸ These items should no longer be stored for the maximum storage period.

- Defrost animal-based food, such as fish, meat, cheese, quark, in the refrigerator compartment.
- Defrost bread at room temperature.
- Prepare food for immediate consumption in the microwave, in the oven, or on the hob.

12 Defrosting

12.1 Defrosting in the refrigerator compartment

When the appliance is operating, condensation droplets or frost form on the rear panel of the refrigerator compartment due to functional reasons. The back panel in the refrigerator compartment defrosts automatically.

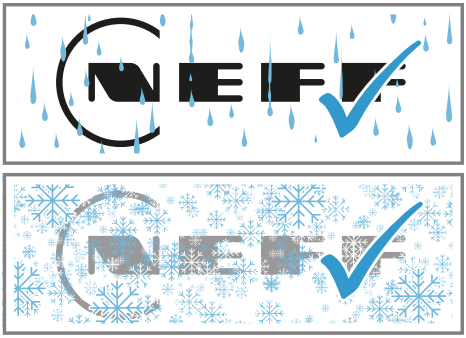

Condensation runs through the condensation channel into the drainage hole to the evaporation pan and does not have to be wiped away.
To ensure that the condensation can drain and odours do not form, observe the following information: Cleaning the condensation channel and drainage hole →*Page 20*.

12.2 Defrosting in the freezer compartment

The freezer compartment does not defrost automatically. A layer of hoarfrost in the freezer compartment impairs refrigeration of the frozen food and increases power consumption.

Defrosting the freezer compartment

Regularly defrost the freezer compartment.

1. Switch on the Super function approx. four hours before defrosting.
   → *"Switching on Super function", Page 15*
   This means that the food reaches very low temperatures and it can be stored for longer at room temperature.
2. Remove the frozen food and temporarily place it in a cool location. Wrap the frozen food with ice packs, if available, in coverings or newspaper.
3. Switch off the appliance.
   →*Page 15*
4. Disconnect the appliance from the power supply.
   Unplug the appliance from the mains or switch off the circuit breaker in the fuse box.
5. ⚠ **WARNING – Risk of burns!**
   Hot water, splashes of water and steam can lead to burns.
   ▸ Always fill the pan for the defrosting process with hot, but not boiling, water.

   To accelerate the defrosting process, place a pan of hot, but not boiling, water on a trivet in the freezer compartment.
6. Wipe up the condensation water with a soft cloth or sponge.
7. Rub the freezer compartment dry with a soft, dry cloth.
8. Electrically connect the appliance.
   →*Page 10*
9. Put the frozen food in the appliance. →*Page 17*

13 Cleaning and servicing

Customer Service must clean inaccessible points. Cleaning by customer service can give rise to costs.

13.1 Preparing the appliance for cleaning

1. Switch off the appliance.
   →*Page 15*
2. Disconnect the appliance from the power supply.
   Unplug the appliance from the mains or switch off the circuit breaker in the fuse box.
3. Take out all of the food and store it in a cool place.
   Place ice packs (if available) onto the food.
4. If there is a layer of hoarfrost, allow this to defrost.
5. Remove all fittings and accessories from the appliance.
   →*Page 20*
6. Remove the door tray rail.
   →*Page 21*

13.2 Cleaning the appliance

⚠ **WARNING**
Risk of electric shock!
An ingress of moisture can cause an electric shock.
▸ Do not use steam- or high-pressure cleaners to clean the appliance.
▸ Do not use the appliance with damp hands.

Liquid in the lighting or in the controls can be dangerous.
▸ The rinsing water must not drip into the lighting or controls.

ATTENTION
Unsuitable cleaning products may damage the surfaces of the appliance.
▸ Do not use hard scouring pads or cleaning sponges.
▸ Do not use harsh or abrasive detergents.
▸ Do not use cleaning products with a high alcohol content.

If liquid gets into the drainage hole, the evaporation pan may overflow.

- The rinsing water must not get into the drainage hole.

If you clean fittings and accessories in the dishwasher, this may cause them to become deformed or discolour.

- Never clean fittings and accessory in the dishwasher.

1. Prepare the appliance for cleaning. →*Page 19*
2. Clean the appliance, the fittings, the accessories and the door seals with a dish cloth, lukewarm water and a little pH-neutral washing-up liquid.
3. Dry thoroughly with a soft, dry cloth.
4. Insert the fittings and install the removable appliance parts.
5. Electrically connect the appliance. →*Page 10*
6. Putting the food into the appliance.

13.3 Cleaning the condensation channel and drainage hole

Regularly clean the condensation channel and drainage hole to ensure that the condensation can drain.

1. Remove the storage container. →*Page 21*
2. Remove the shelf above the fruit and vegetable container. →*Page 22*
3. Carefully clean the condensation channel and the drainage hole, e.g. using a cotton bud.

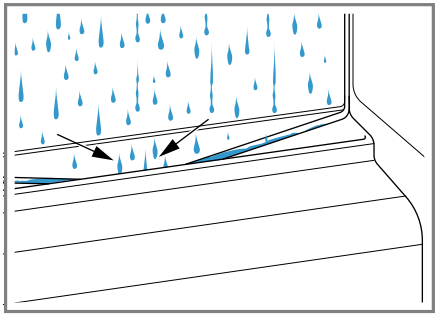

13.4 Removing the fittings

If you want to clean the fittings thoroughly, remove these from your appliance.

Removing the shelf

- Lift the shelf at the front ①, pull it out and remove it ②.

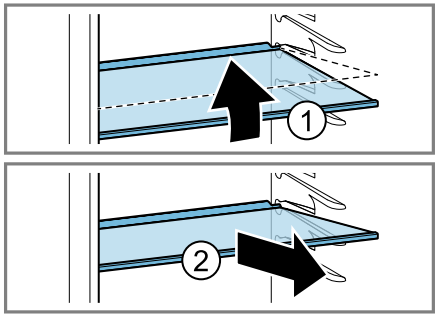

Removing the freezer compartment shelf

▸ Pull out the freezer compartment shelf and remove it.

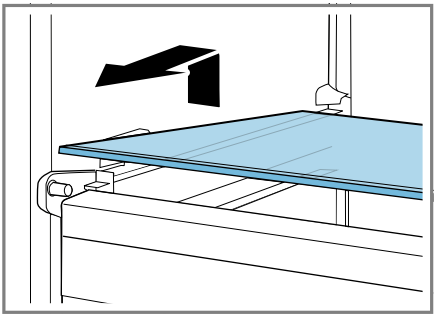

Removing door tray

▸ Lift the door tray and remove it.

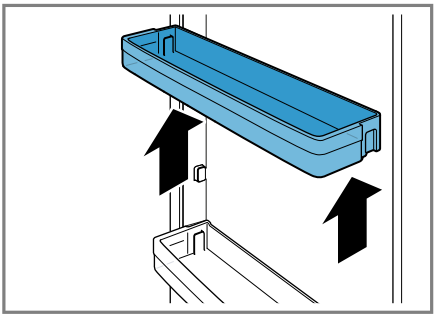

Removing the storage container

1. Pull out the storage container as far as it will go.
2. Lift the storage container at the front ① and remove it ②.

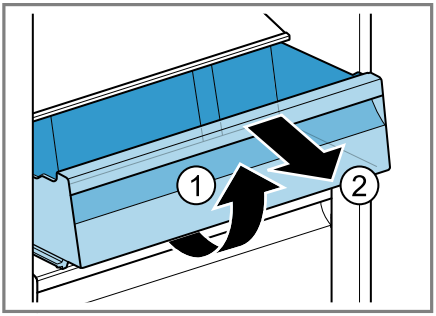

Removing the fruit and vegetable container

Removing the front of the container

You can remove the front of the fruit and vegetable container and frozen food container to facilitate cleaning.

▸ Press in the snap-in hooks on the side of the container ① and remove the front from the container in a turning motion ②.

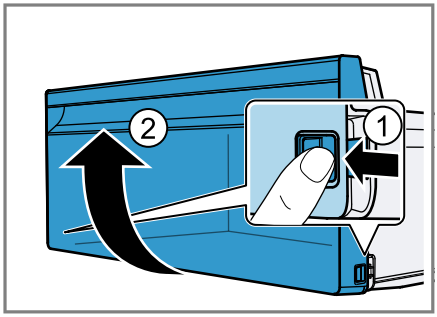

13.5 Removing appliance components

If you want to clean your appliance thoroughly, you can remove certain components from your appliance.

Removing the door tray rail

▸ Lift the door tray rail and remove it.

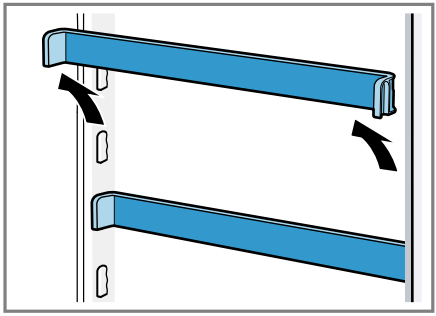

Shelf above the fruit and vegetable container

You can remove the cover of the fruit and vegetable container in order to clean it thoroughly.

Removing the shelf above the fruit and vegetable container

1. Remove the storage container. →*Page 21*
2. Remove the fruit and vegetable container. →*Page 21*

Fitting the shelf above the fruit and vegetable container

1. Ensure that the spoiler on the shelf above the fruit and vegetable container is positioned correctly.

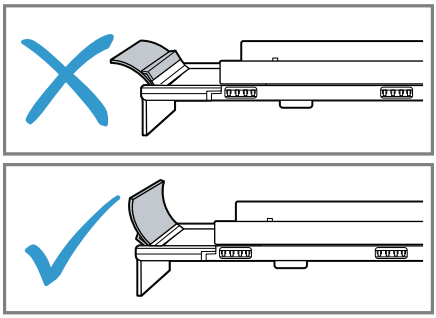

2. Insert the shelf above the fruit and vegetable container.

14 Troubleshooting

You can rectify minor faults on your appliance yourself. Read the troubleshooting information before contacting after-sales service. This will avoid unnecessary costs.

⚠ **WARNING**
Risk of electric shock!
Improper repairs are dangerous.
- Repairs to the appliance should only be carried out by trained specialist staff.
- Only use genuine spare parts when repairing the appliance.
- If the power cord or the appliance power cable of this appliance is damaged, it must be replaced with a special power cord or special appliance power cable, which is available from the manufacturer or its Customer Service.

Fault	Cause and troubleshooting
The appliance is not cooling, the displays and lighting are lit.	Showroom mode is switched on. 1. Switch off the appliance. →*Page 15* 2. Wait 2 minutes. 3. Switch the appliance back on. →*Page 14* 4. Wait 1 minute and then press and hold **°C** until 4 audible signals have sounded. 5. After a short time, check whether your appliance is cooling.

Fault	Cause and troubleshooting
The LED lighting does not work.	Different causes are possible. ▸ Call customer service. The customer service number can be found in the enclosed customer service directory.
The refrigeration unit is switching on more frequently and for longer.	The appliance has been opened frequently. ▸ Do not open appliance door unnecessarily.
	External ventilation openings are covered up. ▸ Remove any obstructions from in front of the external ventilation openings.
	Not a fault. Modern refrigeration machines switch on more frequently and have different power levels to cool more efficiently.  ▸ Remove any obstructions from in front of the external ventilation openings. ▸ Install the appliance as far away as possible from heating elements, cookers and other heat sources. Avoid prolonged exposure of the appliance to direct sunlight. ▸ Regularly defrost the freezer compartment. →*Page 18* ▸ Only open the appliance door as briefly as necessary. ▸ Allow hot food and drinks to cool down first before storing in the appliance.
A layer of frost forms on the back wall of the refrigerator compartment.	Not a fault. Modern refrigeration machines ensure a more even temperature in the refrigerator compartment. The back wall of the refrigerator compartment is defrosted automatically at regular intervals.  ▸ Only open the appliance door as briefly as necessary. ▸ Pack the food airtight or cover it. ▸ Allow hot food and drinks to cool down first before storing in the appliance. ▸ Always leave some space between the food and the interior walls.

Fault	Cause and troubleshooting
A warning signal sounds and **alarm** lights up.	Different causes are possible. ▸ Press **alarm**. ✔ The alarm is switched off.
	The appliance door is open. ▸ Close the appliance door.
The temperature differs greatly from the setting.	Different causes are possible. **1.** Switch off the appliance. →*Page 15* **2.** Switch the appliance back on after five minutes. →*Page 14* ▸ If the temperature is too warm, check the temperature again after a couple of hours. ▸ If the temperature is too cold, check the temperature again on the following day.
The base of the refrigerator compartment is wet.	The condensation channel or drainage hole are blocked. ▸ Clean the condensation channel and the drainage hole. →*Page 20*
The appliance hums, bubbles, buzzes, gargles or clicks.	Not a fault. A motor is running, e.g. refrigerating unit, fan. Refrigerant flows through the pipes. The motor, switches or solenoid valves are switching on or off. No action required.
The appliance makes noises.	Fittings wobble or stick. ▸ Check the removable fittings and, if required, replace these.
	Bottles or containers are touching. ▸ Move the bottles or containers away from each other.
	Super function is switched on. No action required.

14.1 Power failure

During a power failure, the temperature in the appliance rises; this reduces the storage time and the quality of the frozen food.
On the website for your appliance, the technical data provides you with the storage times for frozen food in the event of a fault.

Notes

- Open the appliance as little as possible during a power failure and do not place any other food in the appliance.
- Check the quality of the food immediately after a power failure.

– Dispose of any frozen food that has defrosted and is hotter than 5 °C.
– Cook or fry slightly thawed frozen food, and then either consume it or freeze it again.

14.2 Conducting an appliance self-test

Your appliance has an appliance self-test which displays faults that can be eliminated by your customer service.

1. Switch off the appliance. →*Page 15*
2. Disconnect the appliance from the power supply.
   Unplug the appliance from the mains or switch off the circuit breaker in the fuse box.
3. Electrically reconnect the appliance after 5 minutes. →*Page 10*
4. One minute after switching on, press and hold **super** for 3 to 5 seconds until an audible signal sounds.

✔ The appliance self-test starts when the temperature displays light up in succession.
✔ If, at the end of the appliance self-test, 2 audible signals sound and the temperature display indicates the set temperature, the temperature sensors on your appliance are OK. The appliance switches to normal operation.
✔ If, at the end of the appliance self-test, 5 audible signals sound and the temperature display LEDs light up with a different brightness, inform customer service. The LEDs provide customer service with information about this fault.

5. Press so that the appliance skips to normal operation.

✔ Super cooling is switched on and **super** lights up.

6. Switch off Super cooling.
7. Set the temperature. →*Page 15*

15 Storage and disposal

15.1 Taking the appliance out of operation

1. Switch off the appliance. →*Page 15*
2. Disconnect the appliance from the power supply.
   Unplug the appliance from the mains or switch off the circuit breaker in the fuse box.
3. Remove all of the food.
4. Defrost the appliance. →*Page 18*
5. Clean the appliance. →*Page 19*
6. To guarantee the ventilation inside the appliance, leave the appliance open.

15.2 Disposing of old appliance

Valuable raw materials can be reused by recycling.

⚠ WARNING
Risk of harm to health!
Children can lock themselves in the appliance, thereby putting their lives at risk.
▸ Leave shelves and containers inside the appliance to prevent children from climbing in.
▸ Keep children away from the redundant appliance.

⚠ WARNING
Risk of fire!
If the tubes are damaged, flammable refrigerant and harmful gases may escape and ignite.
▸ Do not damage the tubes of the refrigerant circuit or the insulation.

1. Unplug the appliance from the mains.
2. Cut through the power cord.
3. Dispose of the appliance in an environmentally friendly manner. Information about current disposal methods are available from your specialist dealer or local authority.



This appliance is labelled in accordance with European Directive 2012/19/EU concerning used electrical and electronic appliances (waste electrical and electronic equipment - WEEE). The guideline determines the framework for the return and recycling of used appliances as applicable throughout the EU.

16 Customer Service

Function-relevant genuine spare parts according to the corresponding Ecodesign Directive can be obtained from Customer Service for a period of at least 10 years from the date on which your appliance was placed on the market within the European Economic Area.
Furthermore, our Customer Service will continue to provide you with other function-relevant and storable genuine spare parts for up to 15 years from the date on which your appliance was placed on the market. For more information, please contact our Customer Service team.

Note: Under the terms of the manufacturer's warranty applicable to the location, the use of Customer Service is free of charge. The minimum duration of the warranty (manufacturer's warranty for private consumers) in the European Economic Area is 2 years according to the terms of warranty applicable to the location. The terms of warranty do not affect other rights or claims held by yourself under local legislation.

Detailed information about the warranty period and the warranty conditions in your country is available via the QR code on the enclosed document on service contacts and warranty conditions, from our customer service or on our website.
You can find the contact details for our customer service via the QR code on the enclosed document on service contacts and warranty conditions or on our website.

16.1 Product number (E-Nr.) and production number (FD)

If you contact Customer Service, you will require the product number (E-Nr.) and the production number (FD), which you can find on the appliance's rating plate.
→ *"Appliance", Fig.* **1** / 6 *Page 12*
Make a note of your appliance's details and the Customer Service telephone number to find them again quickly.

17 Technical data

Refrigerant, cubic capacity and further technical specifications can be found on the rating plate.
→ *"Appliance", Fig.* **1** / 6 *Page 12*
You can find more information about your model online at *https://*

eprel.ec.europa.eu/[1]. This web address is linked to the official EU EPREL product database. Please then follow the instructions on searching for the model. The model identifier is made up of the characters before the slash in the product number (E-Nr.) on the rating plate. Alternatively, you can also find the model identifier in the first line of the EU energy label.
The number of light sources included depends on the model.
This product contains a light source from energy efficiency class E.
The light sources are available as a spare part and must only be replaced by trained specialist staff.

[1] Only applies to countries in the European Economic Area

Valid within Great Britain:
Imported to Great Britain by
BSH Home Appliances Ltd.
Grand Union House
Old Wolverton Road
Wolverton, Milton Keynes
MK12 5PT
United Kingdom

BSH Hausgeräte GmbH
Carl-Wery-Straße 34
81739 München, GERMANY

Register your product online
neff-home.com

9001756437 (060428)
en