Use & Care Guide

English / Español

Kenmore

Bottom Freezer Refrigerator

Models: 111.7304*

* color number, número de color

P/No.: 60139-0021700-00

Sears Brands Management Corporation
Hoffman Estates, IL 60179 U.S.A.

www.kenmore.com
www.sears.com

Kenmore®

Code : F706-4

TABLE OF CONTENTS

Warranty 3

Protection Agreements 4

Important Safety Instructions 5-8

Parts and Features 9

Refrigerator Installation 10-18

- Unpacking Your Refrigerator 10
- Prior to Use 11
- Installation 11
- Removing/Replacing Your Refrigerator and Freezer Handles, Doors and Drawers 12-17
- Refrigerator Leveling & Door Adjustment 18

Using Your Refrigerator 19-26

- Setting the Controls 19
- Control Panel 20
- Icemaker 21
- Refrigerator Section 24

Connecting the Water Line 27

Water Filter 28

Care and Cleaning 29-30

Troubleshooting Guide 31-38

Service ..... Back Cover

REFRIGERATOR WARRANTY

KENMORE LIMITED WARRANTY

FOR ONE YEAR from the date of sale this appliance is warranted against defects in material or workmanship when it is correctly installed, operated and maintained according to all supplied instructions.
WITH PROOF OF SALE, a defective appliance will receive free repair or replacement at option of seller.
For warranty coverage details to obtain free repair or replacement, visit the web page: www.kenmore.com/warranty
This warranty applies for only 90 DAYS if this appliance is ever used for other than private household purposes.

This warranty covers ONLY defects in material and workmanship, and will NOT pay for:

1. Expendable items that can wear out from normal use, including but not limited to filters, belts, bags or screw-in base light bulbs.
2. A service technician to clean or maintain this appliance, or to instruct the user in correct appliance installation, operation and maintenance.
3. Service calls to correct appliance installation not performed by Sears authorized service agents, or to repair problems with house fuses, circuit breakers, house wiring, and plumbing or gas supply systems resulting from such installation.
4. Damage to or failure of this appliance resulting from installation not performed by Sears authorized service agents, including installation that was not in accord with electrical, gas or plumbing codes.
5. Damage to or failure of this appliance, including discoloration or surface rust, if it is not correctly operated and maintained according to all supplied instructions.
6. Damage to or failure of this appliance, including discoloration or surface rust, resulting from accident, alteration, abuse, misuse or use for other than its intended purpose.
7. Damage to or failure of this appliance, including discoloration or surface rust, caused by the use of detergents, cleaners, chemicals or utensils other than those recommended in all instructions supplied with the product.
8. Damage to or failure of parts or systems resulting from unauthorized modifications made to this appliance.
9. Service to an appliance if the model and serial plate is missing, altered, or cannot easily be determined to have the appropriate certification logo.

Disclaimer of implied warranties; limitation of remedies
Customer's sole and exclusive remedy under this limited warranty shall be product repair or replacement as provided herein. Implied warranties, including warranties of merchantability or fitness for a particular purpose, are limited to one year or the shortest period allowed by law. Seller shall not be liable for incidental or consequential damages. Some states do not allow the exclusion or limitation of incidental or consequential damages, or limitation on the duration of implied warranties of merchantability or fitness, so these exclusions or limitations may not apply to you.

This warranty applies only while this appliance is used in the United States.

This warranty gives you specific legal rights, and you may also have other rights which vary from state to state.

Sears Brands Management Corporation, Hoffman Estates, IL 60179

PROTECTION AGREEMENTS

Master Protection Agreements

Congratulations on making a smart purchase. Your new Kenmore® product is designed and manufactured for years of dependable operation. But like all products, it may require preventive maintenance or repair from time to time. That's when having a Master Protection Agreement can save you money and aggravation.
The Master Protection Agreement also helps extend the life of your new product. Here's what the Agreement* includes:'

- **Parts and labor** not just for repairing defects, but to help keep products operating properly **under normal use**. Our coverage goes **well beyond the product warranty**. No deductibles, no functional failure excluded from coverage— **real protection**.
- **Expert service** by experienced service technicians trusted in millions of homes every year..
- **Unlimited service calls and nationwide service,** as often as you want us, whenever you want us.
- **"No-lemon" guarantee** – replacement of your covered product after three separate product failures occur within twelve months and a fourth repair is required. Includes free delivery and installation, if necessary, of replacement product.
- **Product replacement** if your covered product can't be fixed
- **Annual Preventive Maintenance Check** at your request – no extra charge.
- **Fast help by phone** – phone support from a service agent on all products to help troubleshoot problems. Think of us as a "talking owner's manual."
- **Power surge protection** against electrical damage due to power fluctuations.
- **$300 Food Loss Protection** for any food spoilage that is the result of mechanical failure of any covered refrigerator or freezer.
- **Service Promise: $50** if first attempt repair of your covered product can't be accomplished and product is not usable while awaiting further repair service.
- **25% discount** off the regular price of any non-covered repair service and related installed parts.

Once you purchase the Agreement, a simple phone call is all that it takes for you to schedule service. You can call anytime day or night.
The Master Protection Agreement is a risk free purchase. If you cancel for any reason during the product warranty period, we will provide a full refund. Or, a prorated refund anytime after the product warranty period expires. Purchase your Master Protection Agreement today!

Some limitations and exclusions apply. For prices and additional information in the U.S.A. call 1-800-827-6655.

*** Coverage in Canada varies on some items. For full details call Sears Canada at 1-800-361-6665.**

Sears Installation Service
For Sears professional installation of home appliances, garage door openers, water heaters, and other major home items, in the **U.S.A. call 1-844-553-6667, and in Canada call 1-800-469-4663.**

PRODUCT RECORD

In the space below, record the date of purchase, model and serial number of your product. You will find the model and serial number printed on an identification label located on the interior liner of the refrigerator compartment. Have these items of information available whenever you contact Sears concerning your product.

Model No._____ Date of Purchase _____

Serial No._____

Save these instructions and attach your sales receipt for future reference.

IMPORTANT SAFETY INSTRUCTIONS

BASIC SAFETY PRECAUTIONS

This guide contains many important safety messages. Always **read and obey** all safety messages.



This is the safety alert symbol. It alerts you to safety messages that inform you of hazards that can kill or hurt you or others, or cause damage to the product.

All safety messages will be preceded by the safety alert symbol and the hazard signal word DANGER, WARNING or CAUTION. These words mean:

⚠ DANGER You **will** be killed or seriously injured if you do not follow instructions.

⚠ WARNING You **can** be killed or seriously injured if you do not follow instructions.

⚠ CAUTION Indicates an imminently hazardous situation which, if not avoided, **may** result in minor or moderate injury, or product damage.

All safety messages will identify the hazard, tell you how to reduce the chance of injury, and tell you what can happen if the instructions are not followed.

⚠ WARNING

To reduce the risk of fire, electric shock, or personal injury when using your product, basic safety precautions should be followed, including the following.

Read all instructions before using this appliance.

- NEVER unplug your refrigerator by pulling on the power cord. Always grip the plug firmly and pull it straight out from the outlet.
- If the supply cord is damaged, it must be replaced by the manufacturer or its service agent or a similarly qualified person in order to avoid a hazard. Do not use a cord that shows cracks or abrasion damage along its length or at either the plug or connector end.
- Do not modify or extend the power cord length. It could cause electric shock or fire.
- When moving your refrigerator away from the wall, be careful not to roll over or damage the power cord.
- DO NOT store or use gasoline or other flammable vapors and liquids in the vicinity of this or any other appliance.
- DO NOT allow children to climb, stand, or hang on the refrigerator doors or shelves in the refrigerator. They could damage the refrigerator and seriously injure themselves.
- Keep fingers out of pinch point areas; clearances between the doors and cabinets are necessarily small. Be careful closing doors when children are in the area.
- Unplug your refrigerator before cleaning or making any repairs.

NOTE: It is strongly recommended that any service be performed by a qualified technician.

SAVE THESE INSTRUCTIONS

⚠ WARNING

- Before replacing a burned-out or broken light bulb, unplug the refrigerator or turn off power at the circuit breaker or fuse box in order to avoid contact with a live wire filament. (A burned-out light bulb may break when being replaced exposing the wire filament.)

  NOTE: Some models have LED interior lighting and service should be performed by a qualified technician.

  WARNING: Setting either or both controls to the OFF position does not remove power to the light circuit.
- When you are finished, reconnect the refrigerator to the electrical source and reset the controls (Thermostat, Refrigerator Control, and or Freezer Control, depending on the model) to the desired setting.
- This refrigerator must be properly installed in accordance with the Attention Installer Instructions.
- After your refrigerator is in operation, do not touch the cold surfaces in the freezer compartment when hands are damp or wet. Skin may adhere to the extremely cold surfaces.
- Do not plug several appliances into the same wall outlet. - It can be a cause of overheating and/or fire. Use an exclusive grounding receptacle for the refrigerator.
- Never hold the power cord or plug with wet hands. - There is a risk of electric shock
- Never use a damaged power cord or plug, or loose main socket. - There is a risk of fire, electric shock or serious injury.
- Be sure to ground. Check if your wall outlet is grounded (earthed). - There is a risk of electric shock hazards.
- Do not install the refrigerator on a wet floor or in a place with excessive humidity and moisture. - Electric insulation gets weakened, resulting in a risk of electric shock hazards.
- Never let the power cord touch or pass over heating appliances. - Power cord can be damaged, resulting in a risk of electric shock hazards.
- Make sure plug is fully inserted into socket to prevent the risk of electrical shock.
- Do Not store or use gasoline or other flammable vapors and liquids in the vicinity of this or any other appliance.
- Never pour or spray water into the refrigerator (both interior and exterior). - Electric insulation gets weakened, resulting in a risk of electric shock hazards.
- Do not place containers with water or liquid on top of refrigerator. - Water can spill into the refrigerator and can cause electric shock hazards or damage.
- Do not move or remove compartment shelves/pockets while foods and containers are on them. - Hard containers (of glass, metal etc.) can fall to hurt you and can break glass shelf and interior parts.
- Never repair, disassemble or alter the refrigerator on your own. - There is a risk of personal injury or damage to the refrigerator. It is recommended that any service be carried out by a qualified person.
- If a gas leak is found near the refrigerator or in the kitchen, ventilate it immediately without touching the power plug or refrigerator.
- Do not store medicine, academic research samples which require strict temperature control in the refrigerator.
- Never insert fingers or hands into the bottom of the refrigerator, especially into the bottom back. - You can be hurt by sharp metal edges or can receive an electric shock.
- When you find the power cord damaged or cut, call the service agent immediately.
- When you get rid of your old refrigerator, be sure to remove the door packings first. - Children can be entrapped and suffocated in an abandoned refrigerator.
- It is recommended to unplug the refrigerator when it is not going to be used for a long period of time.
- Never touch foods and containers especially of metal with wet hands in the freezer compartment. - You can be hurt by chilblains or cold burns.
- Never eat any decayed or deteriorated food at all. - Foods stored too long in the refrigerator can deteriorate and become decayed.
- Never place bottles and containers of glass in the freezer compartment. - Glass containers and bottles can break and hurt you.
- When moving the refrigerator (horizontally or tilted), more than 2 persons are required to hold it.(One to hold top back handles, the other to hold the bottom holder). If other parts are held instead, it is very dangerous and likely to slip.

SAVE THESE INSTRUCTIONS

⚠ WARNING

- Be sure to turn up the wheel first before moving the refrigerator - Be sure to turn up the wheel first before moving the refrigerator, Otherwise, the parts can collide and break each other.
- DO NOT touch the automatic ice making mechanism while the refrigerator is plugged in.
- DO NOT refreeze frozen foods which have thawed completely. The United States Department of Agriculture in Home and Garden Bulletin No. 69 says:

…You may safely refreeze frozen foods that have thawed if they still contain ice crystals or if they are still cold—below 39°F (4°C).

…Thawed ground meats, poultry or fish that have any off-odor or off-color should not be refrozen and should not be eaten. Thawed ice cream should be discarded. If the odor or color of any food is poor or questionable, dispose of it. The food may be dangerous to eat.

Even partial thawing and refreezing reduces the eating quality of foods, particularly fruits, vegetables and prepared foods. The eating quality of red meats is affected less than that of many other foods. Use refrozen foods as soon as possible to save as much of their quality as you can.

⚠ WARNING: This product contains chemicals known to the State of California to cause cancer and birth defects or other reproductive harm. ***Wash hands after handling.***

SAVE THESE INSTRUCTIONS

⚠ DANGER: RISK OF CHILD ENTRAPMENT

Junked or abandoned refrigerators are dangerous, even if they are sitting for only a few days. If you are getting rid of your old refrigerator, please follow the instructions below to help prevent accidents (child entrapment and suffocation).

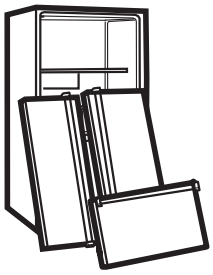

BEFORE YOU THROW AWAY YOUR OLD REFRIGERATOR OR FREEZER:

- Take off the doors.
- Leave the shelves in place so that children may not easily climb inside.

CFC/HCFC DISPOSAL

Your old refrigerator may have a cooling system that used CFCs or HCFCs (chlorofluorocarbons or hydrochlorofluorocarbons). CFCs and HCFCs are believed to harm stratospheric ozone if released to the atmosphere. Other refrigerants may also cause harm to the environment if released to the atmosphere

If you are throwing away your old refrigerator, make sure the refrigerant is removed for proper disposal by a qualified technician. If you intentionally release refrigerant, you may be subject to fines and imprisonment under provisions of environmental legislation.

ELECTRICAL & GROUNDING REQUIREMENTS

IMPORTANT: Please read carefully.

TO CONNECT ELECTRICITY

⚠ WARNING

Electrical Shock Hazard

FOR PERSONAL SAFETY, this appliance must be properly grounded. Have the wall outlet and the circuit checked by a qualified electrician to make sure the outlet is properly grounded.

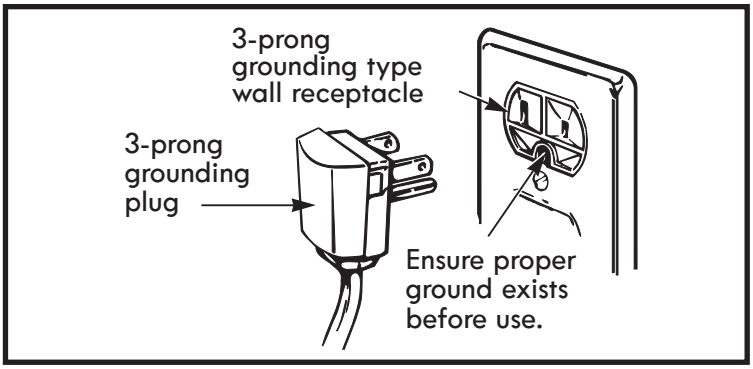

RECOMMENDED GROUNDING METHOD

The refrigerator should always be plugged into its own individual properly grounded electrical outlet rated for 115 Volts, 60 Hz, AC only, and fused at 15 or 20 amperes. This provides the best performance and also prevents overloading house wiring circuits which could cause a fire hazard from overheated wires. It is recommended that a separate circuit serving only this appliance be provided.

Use a receptacle that cannot be turned off with a switch or pull chain. Do not use an extension cord.

Where a standard two-prong wall outlet is encountered, it is your personal responsibility and obligation to have it replaced with a properly grounded three-prong wall outlet.

USE OF EXTENSION CORDS

Because of potential safety hazards under certain conditions, the use of an extension cord is not recommended. However, if you still elect to use an extension cord, it is absolutely necessary that it be a UL-listed (USA), 3-wire grounding type appliance extension cord having a grounding type plug and outlet, and that the electrical rating of the cord be 15 amperes (minimum) and 120 volts.

Use of an extension cord will increase the clearance needed for the back of the refrigerator.

PARTS AND FEATURES

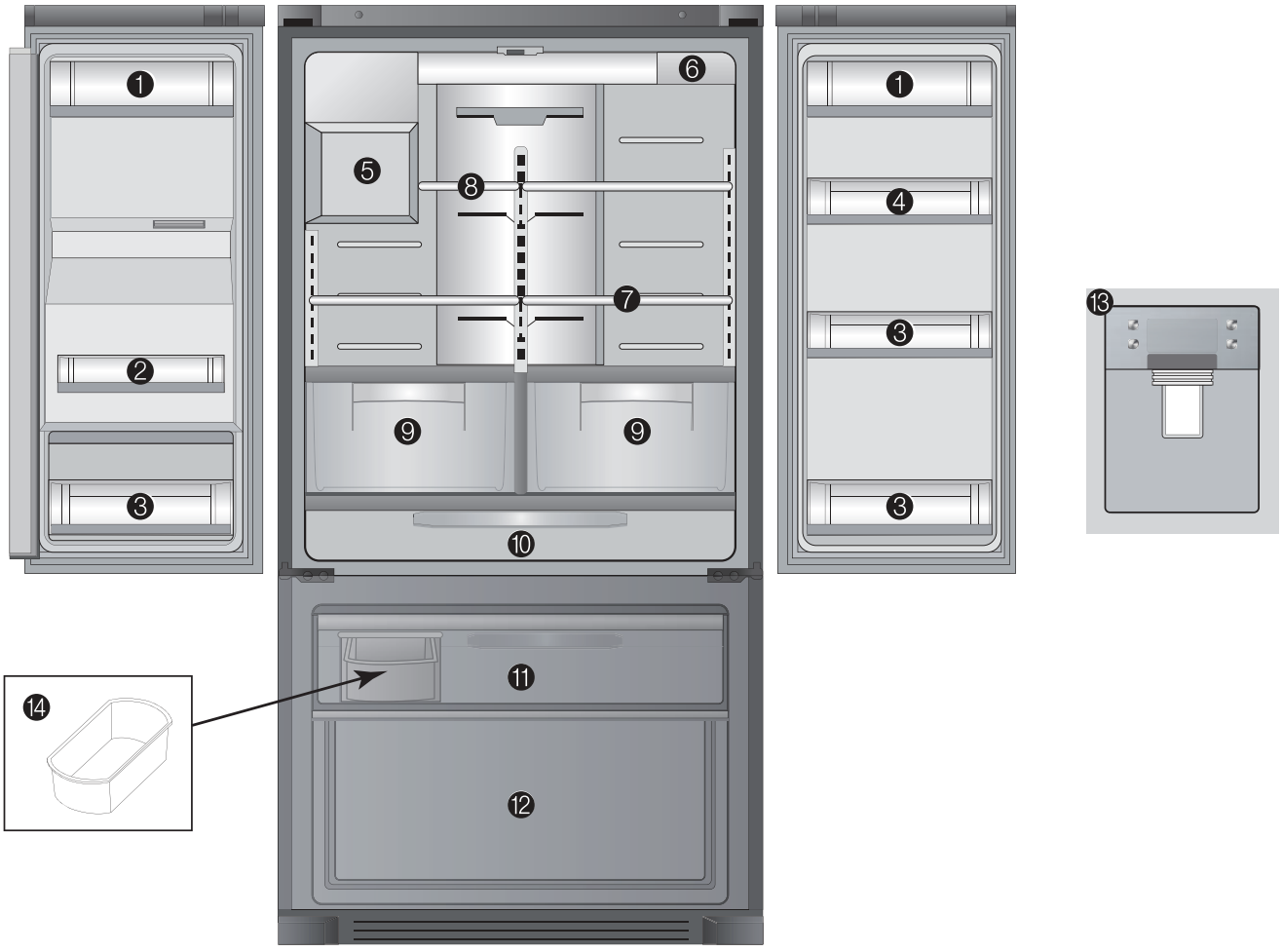

* This instruction manual refers to several models. Features may vary according to model.

1. Covered Dairy Bin or Covered Storage Bin
   for storing butter and cheese.
2. Narrow Door storage bin
   for small items storage
3. Gallon door storage bin
   for items of medium to large size.
4. Low profile door storage bin
   for items of medium to large size.
5. Icemaker/Ice cube bin
   for making and holding ice.
6. Water filter
7. Adjustable glass shelf
   for items of medium to large size.
8. Small glass shelf
   for items of small to medium size.
9. Humidity controlled crisper Bin
   for storage of fruits and vegetables
10. Full width pantry drawer
    for storage of miscellaneous small items
11. Pull out freezer drawer
12. Lower freezer basket
    for general freezer storage
13. Control and display panel
14. Ice storage bin

REFRIGERATOR INSTALLATION

⚠ WARNING

Excessive Weight Hazard:

Use two or more people to move and install the refrigerator. Failure to do so can result in back or other injury.

UNPACKING YOUR REFRIGERATOR

Remove tape and any temporary labels from your refrigerator before using. Do not remove any warning- type labels, the model and serial number label, or the Tech Sheet that is located under the front of the refrigerator.

To remove any remaining tape or glue, rub the area briskly with your thumb. Tape or glue residue can also be easily removed by rubbing a small amount of liquid dish soap over the adhesive with your fingers. Wipe with warm water and dry.

Do not use sharp instruments, rubbing alcohol, flammable fluids, or abrasive cleaners to remove tape or glue. These products can damage the surface of your refrigerator.

Refrigerator shelves are installed in the shipping position. Please reinstall shelves according to your individual storage needs.

⚠ WARNING

Excessive Weight Hazard:

Your refrigerator is heavy. When moving the refrigerator for cleaning or service, be sure to protect the floor. Always pull the refrigerator straight out when moving it. Do not wiggle or walk the refrigerator when trying to move it, as floor damage could occur.

⚠ WARNING

Explosion Hazard:

Keep flammable materials and vapors, such as gasoline, away from the refrigerator. Failure to do so can result in fire, explosion, or death.

REFRIGERATOR INSTALLATION

PRIOR TO USE

1. Clean your refrigerator thoroughly and wipe off all dust that accumulated during shipping.

2. Install accessories such as ice cube bin, drawers, shelves, etc., in their proper places. They are packed together to prevent possible damage during shipment.

3. Allow your refrigerator to run for at least two to three hours before putting food in it. Check the flow of cold air in the freezer compartment to ensure proper cooling. Your refrigerator is now ready for use.

INSTALLATION

The refrigerator should always be plugged into its own individual properly grounded electrical outlet rated for 115 Volts, 60 Hz, AC only, and fused at 15 or 20 amperes. This provides the best performance and also prevents overloading house wiring circuits which could cause a fire hazard from overheated wires. It is recommended that a separate circuit serving only this appliance be provided.

⚠ WARNING

Shock Hazard:

To reduce the risk of electric shock, do not install the refrigerator in a wet or damp area.

INSTALLATION (continued)

1. To avoid noise and vibration, the unit must be leveled and installed on a solidly constructed floor. If required, adjust the leveling legs to compensate for unevenness of the floor. The front should be slightly higher than the rear to aid in door closing. Leveling legs can be turned easily by tipping the cabinet slightly. Turn the leveling legs to the left to raise the unit or to the right to lower it. (See Leveling and door Allgnment.)

   NOTE: Installing on carpeting, soft tile surfaces, a platform or weakly supported structure is not recommended.

2. Install this appliance in an area where the temperature is between 55°F (13°C) and 110°F (43°C). If the temperature around the appliance is too low or high, cooling ability may be adversely affected.

3. Select a place where a water supply can be easily connected for the automatic icemaker.

   NOTE: The water pressure must be from 30 to 125 psi or 207-862 kPa or 2.1-8.8 kgf/cm². If the refrigerator is installed in an area with low water pressure below 30 psi, you can install a booster pump to compensate for the low pressure.

4. Too small of a distance from adjacent items may result in lowered freezing capability and increased electricity consumption charges. Allow at least 2 inch (5 cm) between the back of the refrigerator and the wall.

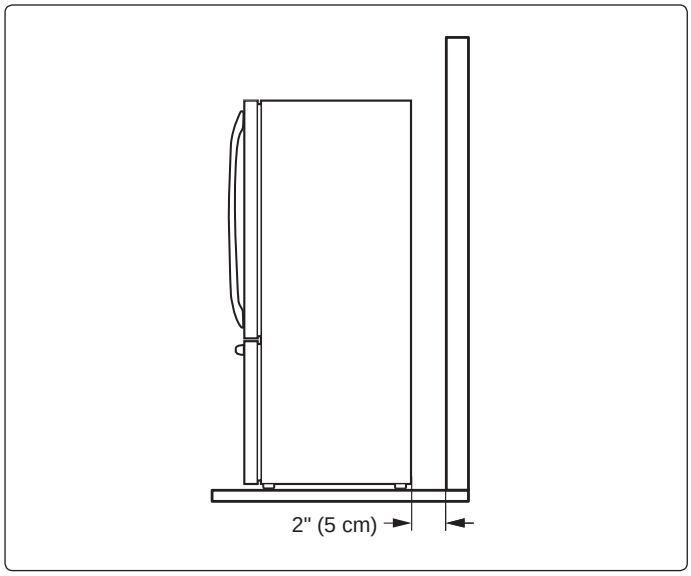

NOTE: Removing the doors is always recommended when it is necessary to move the refrigerator through a narrow opening. If it is necessary to remove the handles, follow the directions below.

HOW TO REMOVE REFRIGERATOR DOOR HANDLE

NOTE: Handle appearance may vary from the illustrations on this page.

Removing Refrigerator Handle

Loosen the set screws with the 2.5mm hex key provided and remove the handle.

HOW TO REPLACE REFRIGERATOR DOOR HANDLE

NOTE: Handle appearance may vary from the illustrations on this page.

Removing Refrigerator Handle

Place the handle on the door by fitting the handle footprints over the mounting fasteners and tightening the set screws with a hex key.

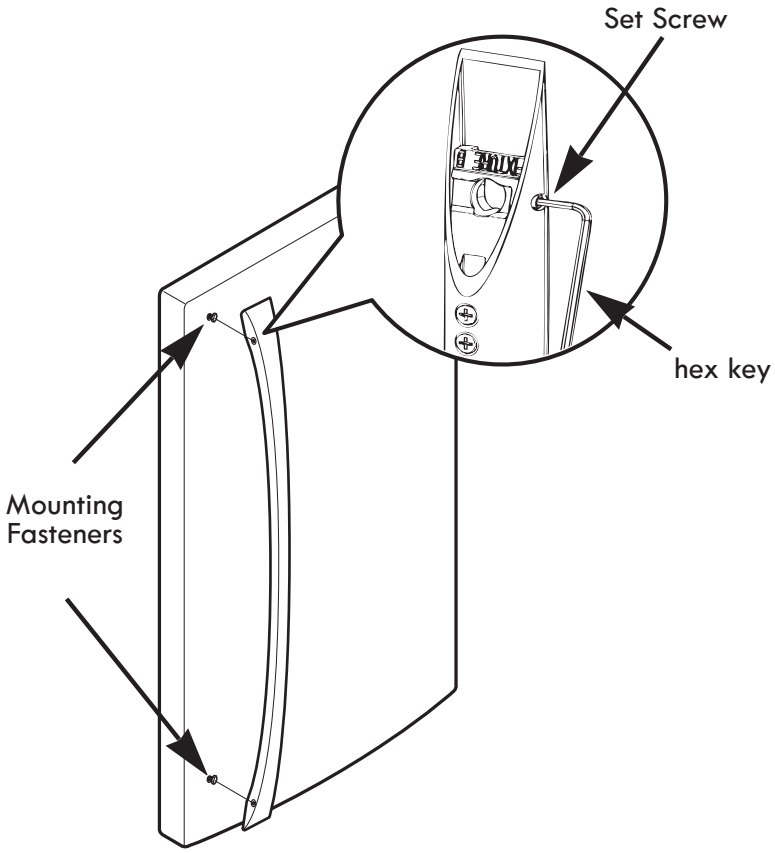

REFRIGERATOR INSTALLATION

NOTE: Removing the doors is always recommended when it is necessary to move the refrigerator through a narrow opening. If it is necessary to remove the handles, follow the directions below.

HOW TO REMOVE FREEZER DOOR HANDLE

NOTE: Handle appearance may vary from the illustrations on this page.

Removing Freezer Drawer Handle

Loosen the set screws located on the lower side of the handle with the hex key provided and remove the handle.

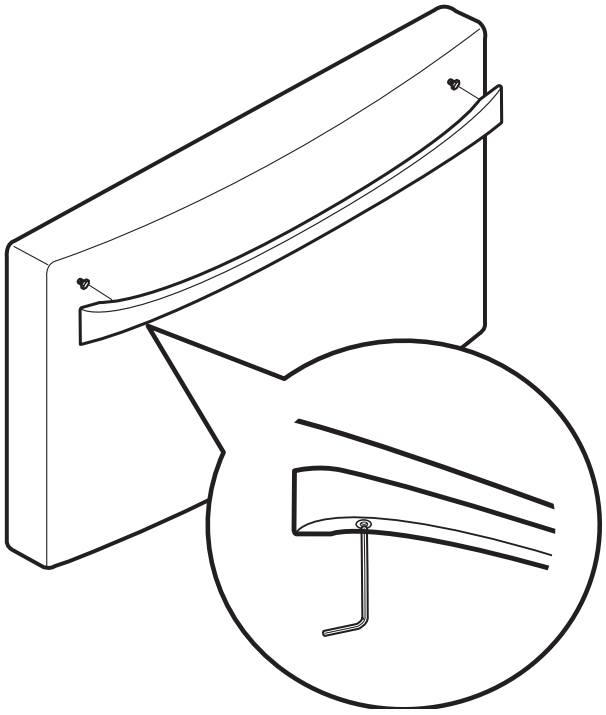

HOW TO REPLACE FREEZER DOOR HANDLE

NOTE: Handle appearance may vary from the illustrations on this page.

Replacing Freezer Drawer Handle

Place the handle on the door by fitting the handle footprints over the mounting fasteners and tightening the set screws with a hex key.

⚠ WARNING

When assembling or disassembling the handles:

- Grasp the handle firmly to ensure it will not drop or cause injury.
- Prevent the handle from swinging toward nearby people or animals.
- Insert the handle footprints over the door mounting fasteners and tighten the hex screws to fix the handle in place.
- Check for any gap between the door and handle after the handle is fixed in place.

REMOVING AND REPLACING REFRIGERATOR DOORS

⚠ WARNING

Risk of electric shock!

Before removing top hinge cover

- Shut off the water supply to the appliance.
- Unplug the appliance or switch off power from the breaker or fuse panel.

To remove the left refrigerator door:

1. Remove top hinge cover using a phillips type screwdriver by removing 5 screws

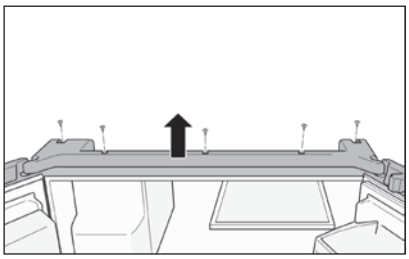

2. Remove the grounding wire (green with yellow stripe) by removing the screw using a phillips screwdriver, and disconnect the harness wires and water tube.

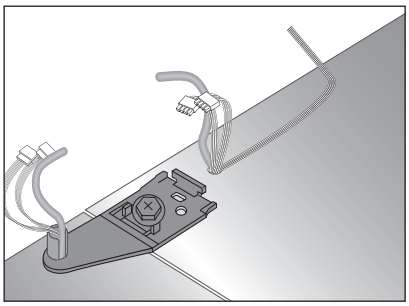

3. Using a large phillips screwdriver, turn top hinge fastener counterclockwise to remove the top hinge/ plate.

   CAUTION: After the hinge is removed, the door can fall down forward. Please secure door during this process.

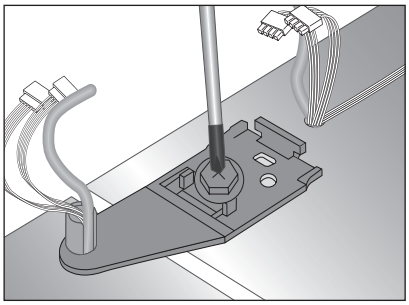

4. Lift the door from the middle hinge pin and remove the door. Place the door, inside facing up, on a non-scratch surface.

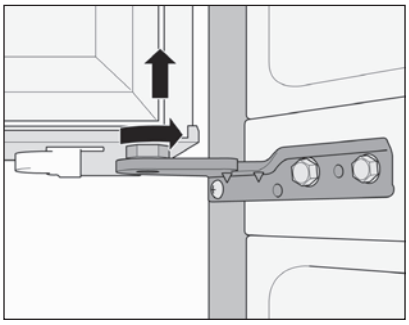

To remove the right refrigerator door:

1. Remove top hinge cover using a phillips type screwdriver by removing 5 screws.

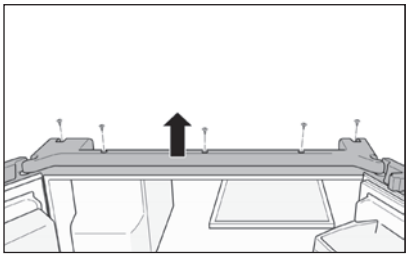

2. Using a large phillips screwdriver, turn top hinge fastener counterclockwise to remove the top hinge/ plate.

   CAUTION: After the hinge is removed, the door can fall down forward. Please secure door during this process.

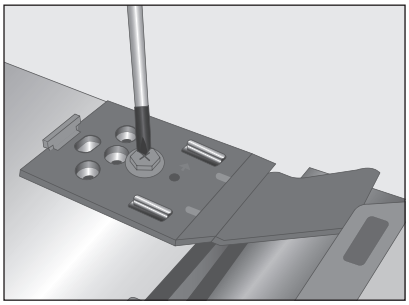

3. Lift the door from the middle hinge pin and remove the door. Place the door, inside facing up, on a non-scratch surface.

REFRIGERATOR INSTALLATION

Reinstalling the Left Refrigerator Door

1. Lower the door onto the middle hinge.

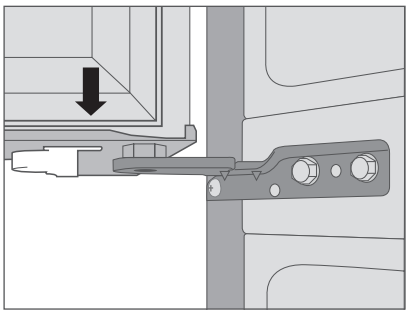

2. Fit the top hinge over the mounting holes and align to proper position before tightening.
Turn top hinge fastener clockwise to secure the hinge.
Connect the harness wires and water tube.

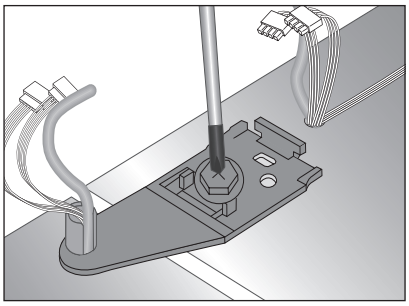

3. Screw top hinge cover into place with a screwdriver.

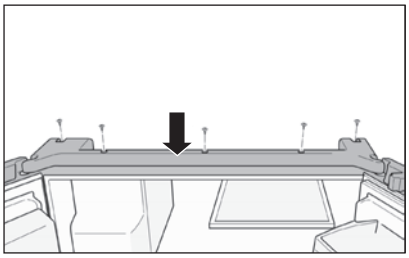

Reinstalling the Right Refrigerator Door

1. Lower the door onto the middle hinge.

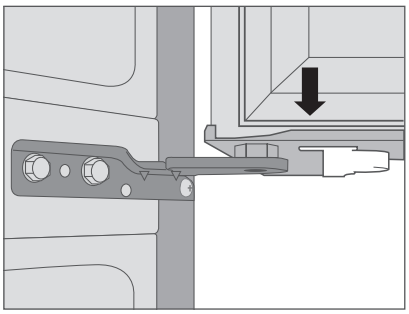

2. Fit the top hinge over the mounting holes and align to proper position before tightening.
Turn top hinge fastener clockwise to secure the hinge.

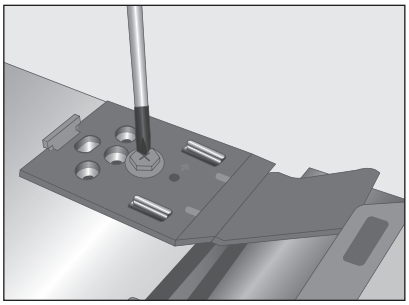

3. Screw top hinge cover into place with a screwdriver.

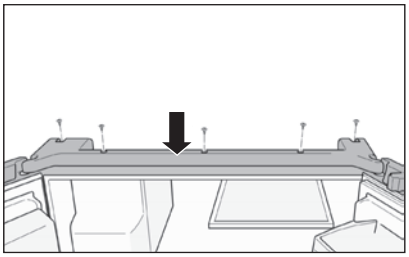

HOW TO REMOVE THE FREEZER DRAWER

⚠ **WARNING**: Use two or more people to remove and install the freezer drawer. Failure to do so can result in personal injury, product or property damage.

1. Open freezer drawer as far as possible to fullest extension. Grasp the sides of the pull out the upper freezer drawer using a hand on each side. Pull "up and in" at the same time on one side only, dislodging the clip fastener that holds the pull out freezer drawer to the rail assembly. Repeat this action on the opposite side. Once both sides are dislodged, simply remove the pull out freezer drawer from the appliance.

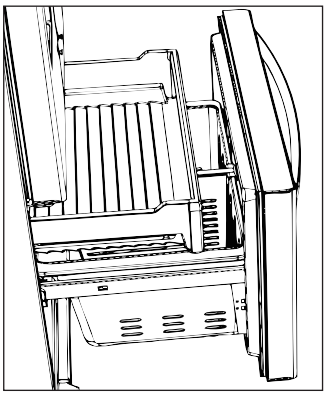

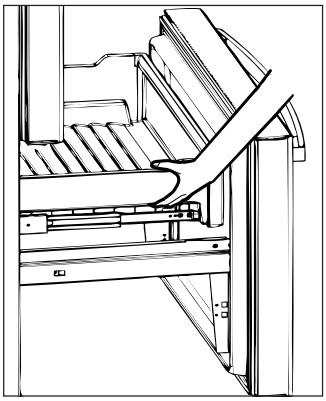

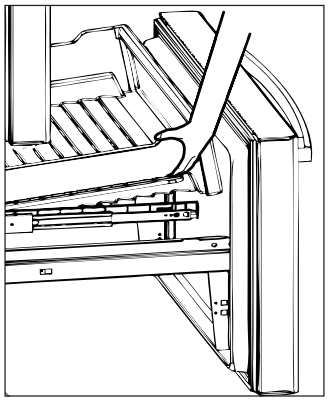

2. Remove lower freezer basket by pulling up and tilting forward until it can be removed from the freezer drawer/door assembly.

3. Push the rail support locking tabs to release the main freezer drawer rails from the cabinet while slightly pulling the exterior freezer drawer outwards, so that the locking tab does not return to the locked position. The locking tabs are located in the freezer compartment to the rear of the main rail assembly (which is attached to main exterior freezer drawer) as shown in the illustration below.

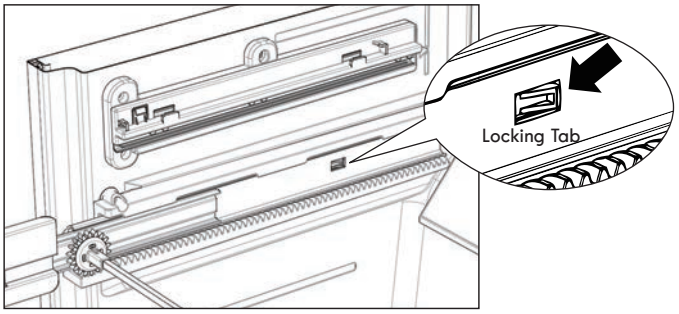

4. Pull exterior freezer drawer to fully disengage the rail assembly from the unit. Use 2 people for this task as the door is heavy and awkward to handle.

⚠ **CAUTION**: Do not hold the handle when removing or replacing the drawer. The handle may come off and it could cause personal injury.

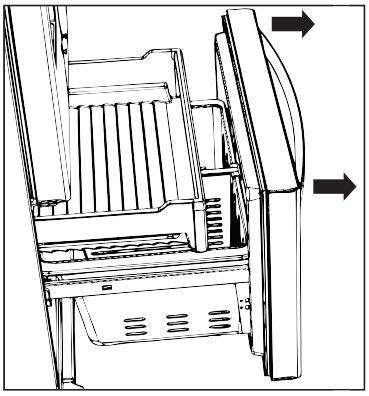

5. Place the door on a non-scratch surface.

HOW TO INSTALL THE FREEZER DRAWER

1. Using 2 people (recommended), align end of the exterior drawer rails to the lower rail guides located on the sidewalls of the freezer compartment. Make sure the gear teeth are engaged to the gear rail the same amount on both sides.

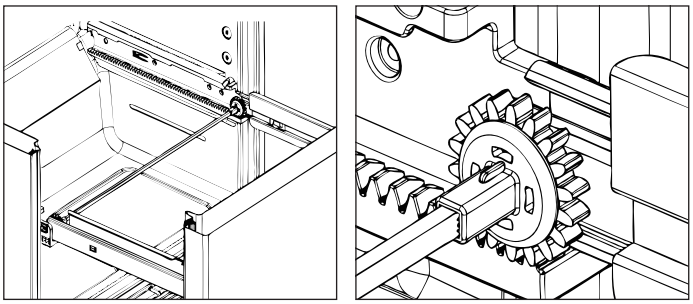

2. Fully push in and close freezer drawer to engage rails with rail support locking tab, applying a bit of pressure after the door is closed to seat the tabs to the rail.

   CAUTION: Make sure the tabs are completely engaged to the rail or the refrigerator drawer could be pulled out of the refrigerator by the customer. Fully open the freezer door to check and see if the locking tabs are fully engaged. If they are not engaged, gently push each freezer rail with a flat head screwdriver towards the freezer compartment until the locking tabs snap to the locked position.

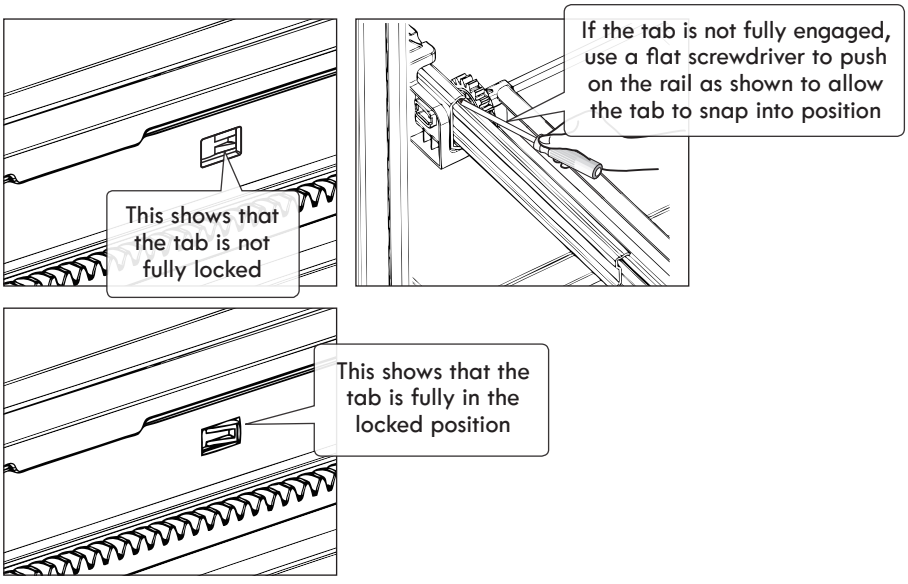

3. Replace the lower freezer drawer basket

4. Replace the upper freezer drawer, locate and push down on both sides to snap the upper freezer drawer back to the correct locked position.

5. Open and close the freezer drawer several times to make sure operation is smooth and seal is consistent all the way around the freezer compartment.

REFRIGERATOR LEVELING & DOOR ADJUSTMENT

The refrigerator must be level in order to maintain optimal performance and desirable front appearance.
(If the floor beneath the refrigerator is uneven, the freezer and refrigerator doors look unbalanced.)

Leveling Refrigerator

1. Fully open the freezer drawer and remove the freezer drawer basket to gain access to the lower toe guard fasteners.

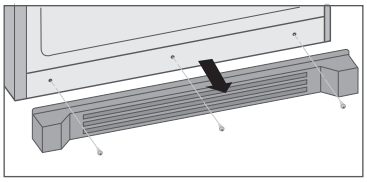

2. Remove the lower toe guard using a phillips screwdriver.

   NOTE: Put screws in safe location so they are not lost.

3. Using the wrench provided, turn the leveling leg clockwise to lower and counterclockwise to raise the front corners of the refrigerator.

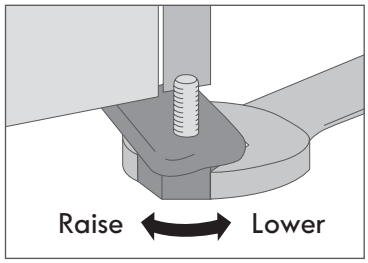

4. Install lower toe guard/grille using a phillips screwdriver.

5. Install freezer drawer basket, then open and close the freezer drawer several times to make sure operation is smooth without hindrance.

Adjusting a refrigerator door

If the height of the refrigerator doors is uneven, turn the screw nut on the middle hinge to adjust the refrigerator door.

1. To raise a refrigerator door turn the screw counterclockwise.

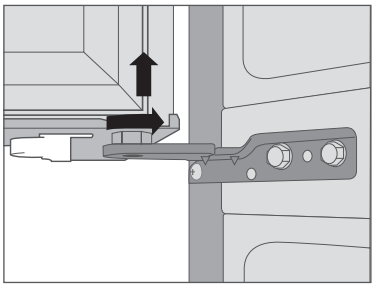

2. To lower a refrigerator door turn the screw clockwise.

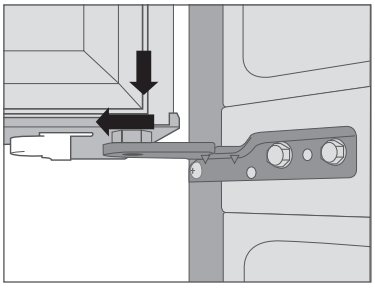

Adjusting the freezer drawer

If the freezer drawer is higher on one side than the other (not even):

1. Loosen the two side fasteners on the side where adjustment is needed.
   Do not remove the fasteners!

2. Use the top fastener to adjust the freezer drawer.

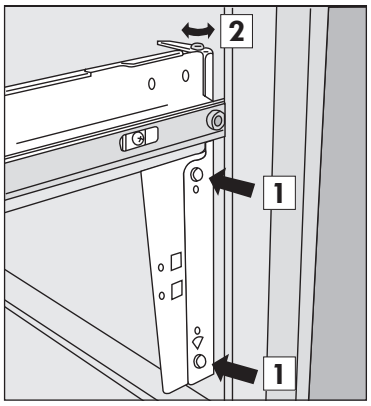

3. When the freezer drawer is level, tighten the two side fasteners.

SETTING THE CONTROLS

Temperature Control

NOTE: When changing control settings, wait 24 hours before making additional adjustments. The controls are set correctly when milk or juice is as cold as you would like and when ice cream is firm. If the temperature in either compartment is too cold or too warm, change the setting one increment at a time. Wait 24 hours for the change to stabilize before adjusting again.

- The refrigerator temperature control is preset to 37 deg F (3 deg C) and the freezer control is preset to 0 deg F (-18 deg C). These are recommended temperature settings for normal use conditions.

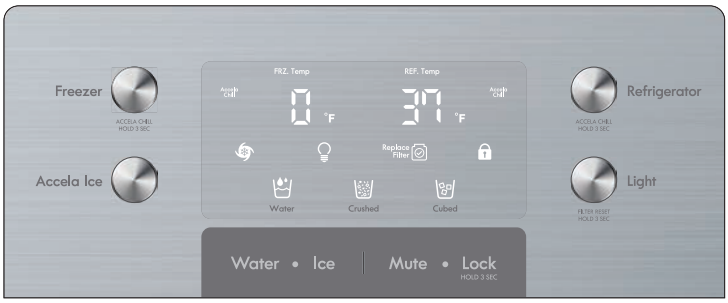

Freezer Compartment

Push the Freezer button and the temperature setting changes in the sequence as shown below:

>>> Sequential Temperature Change <<<



Accela Chill Freezer function:

To activate freezer Accela Chill, press and hold the Freezer button for 3 seconds. Accela Chill LED will turn on. Push the button again to cancel.

The Accela Chill function is useful to help quickly chill the freezer compartment when needed. For example: If a large quantity of warm food is placed inside the freezer, or if loading the freezer with new groceries which may not be as cold as normal freezer temperatures.

Accela Chill will automatically cancel (Accela Chill LED will turn off) after 50 hours.

Refrigerator Compartment

Push the Refrigerator button and the temperature setting changes in the sequence as shown below:

>>> Sequential Temperature Change <<<



Accela Chill Refrigerator function:

To activate refrigerator Accela Chill, press and hold the Refrigerator button for 3 seconds. Accela Chill LED will turn on. Push the button again to cancel.

The Accela Chill function is useful to help quickly cool the refrigerator compartment when needed. For example: If a large quantity of warm food is placed inside the refrigerator, or if loading the refrigerator with new groceries which may not be as cold as normal refrigerator temperatures.

Accela Chill refrigerator function will automatically cancel (Accela Chill LED will turn off) after 6 hours

Demo Mode (For Store Use Only)

The Demo Mode disables all cooling in the refrigerator and freezer sections to conserve energy while on display in a retail store.
When Demo Mode is active, the display panel can be demonstrated without activating cooling operation.

To activate :

1. Push the Lock button.
2. Press Light button 5 times while pressing and holding the Accela Ice and Refrigerator.



To deactivate :

Press Light button 5 times while pressing and holding the Accela Ice and Refrigerator.

Control Panel

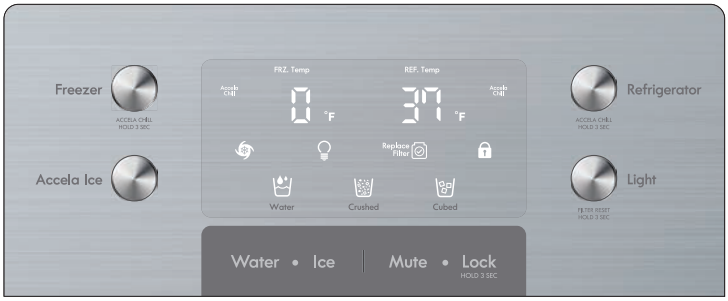

1. Freezer button Freezer

Selection button for freezer compartment temperature.

2. Accela Ice button Accela Ice

→ Press the Accela Ice button for 3 seconds to turn on Accela Ice mode
→ Press the "Freezer" button one time to cancel Accela Ice feature (LED Off)
This function increases ice-making capabilities for 24 hours.

3. Water/Ice select button Water • Ice

For your convenience you can select Water, Crushed Ice or Cubed Ice.
To select, press the dot between the Water and Ice text on the display, LED lit icons will toggle between Water, Crushed, and Cubed ice every time the button is pressed and released.
To obtain the water or ice, push the dispenser pad smoothly with your cup and your selection will come out 1~2 seconds later.
- Try to avoid placing the rim of your glass near the bottom of the pad, otherwise water or icecubes may spill or splash.

4. Mute/Lock button Mute • Lock

When either the refrigerator or the freezer door is left open for more than one minute, an audible alarm will sound to notify you that the door is open. Mute button will silence the door alarm warning.

To activate, Press and hold the dot between the Mute and Lock icons for 3 seconds. To disable the lock function, press and hold the dot for 3 seconds.

When the Lock function is activated, no other buttons will work. The dispenser pad is also deactivated.

5. Refrigerator button Refrigerator

Selection button for refrigerator compartment temperature.

6. Light button Light

1) Press to turn dispenser light on and/or off.
2) When the "Replace Filter" light is illuminated, it is time to replace your water filter. After changing water filter, press for 3 seconds to reset Replace Filter notification icon.

7. Symbols on the display panel

Accela Ice
Illuminates when Accela Ice function is ON.

Light
Illuminates when the water dispenser light is ON.

Replace Filter
When the Filter Change icon turns on, you need to change the water filter. After changing the water filter, press and hold the Water Filter button for three seconds to turn the indicator light off. You need to change the water filter approximately every six months.

Panel lock
illuminates when appears when the panel lock is on

8. Temperature Mode Switch Function (°F ↔°C)
If you want to convert °F to °C or vice Versa:

1. Press and hold the **Lock** button for 3 seconds. The lock icon will illuminate.
2. Press and hold the **Accela Ice** button for approximately 15 seconds until the temperature mode changes.

NOTE: If the lock icon is illuminated after performing this function, press and hold Lock button for 3 seconds to turn control lock OFF.

ICEMAKER

In case the icemaker doesn't work

If the ice cubes get stuck and do not dispense:

1. Pull out the ice storage bin and separate any ice cubes that may have stuck together.
2. If the amount of water which is supplied to the icemaker needs adjusting, contact Sears or another qualified service dealer to make the necessary adjustment.

In case of power failure

In the event of a lengthy power failure, remove ice cubes in the storage bin as the ice may melt and flow down to the ice dispenser and leak out.

Place bin back in the icemaker assembly.

Shutting down the icemaker

Important!

If you do not intend to use any ice cubes for longer than one week (e.g. because you are going on holiday), shut down the icemaker for that period in order to prevent ice cubes from freezing together.

1. Press the release button and remove the ice cube bin from the front of the icemaker.

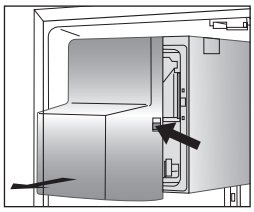

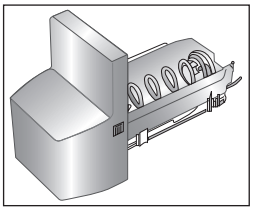

If the bin cannot be pushed all the way back, rotate the screw conveyor a quarter turn and insert bin again.

2. Press the On/Off button for 3 seconds to turn the icemaker off.

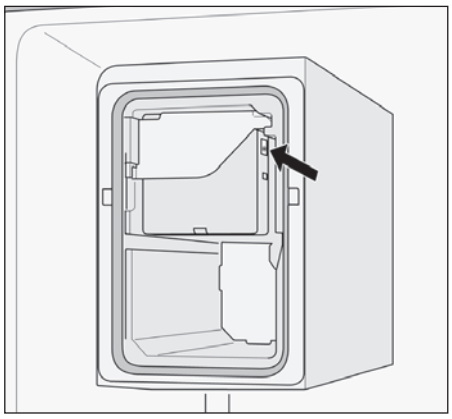

3. Empty and clean the ice cube bin.

4. Return the ice cube bin into position at the front of the icemaker. Push the bin back on the supports until it snaps into place.

Reactivating the icemaker :

Press the button for 3 seconds (led lamp is on) - the icemaker is activated.

FOOD STORAGE GUIDE

- Wash food before storing
- Divide and separate food into smaller pieces.
- Place watery food or food with a lot of moisture in front shelves (close to door side). If they are placed close to the cold air vent, they can be frozen.
- Warm or hot food should be cooled down enough before storing to reduce power consumption and to enhance refrigeration performance.
- Be careful in storing tropical fruits such as bananas, pineapples and tomatoes, as they can easily deteriorate in lower temperatures.
- Keep enough space between the food items. If too tight or too close, cold air circulation is hindered, resulting in poor refrigeration.
- Never forget to cover or wrap food to prevent odors.

AUTOMATIC ICEMAKER (continued)

⚠ CAUTION:

- The first ice and water dispensed may include particles or odor from the water supply line or the water tank.
- Throw away the first few batches of ice. This is also necessary if the refrigerator has not been used for a long time.
- Never store beverage cans or other items in the ice bin for the purpose of rapid cooling. Doing so may damage the icemaker or the containers may burst.
- If discolored ice is dispensed, check the water filter and water supply. If the problem continues, contact a Sears or other qualified service center. Do not use the ice or water until the problem is corrected.
- Keep children away from the dispenser. Children may play with or damage the controls.
- The ice passage may become blocked with frost if only crushed ice is used. Remove the frost that accumulates by removing the ice bin and clearing the passage with a rubber spatula. Dispensing cubed ice can also help prevent frost buildup.
- Never use thin crystal glass or crockery to collect ice. Such containers may chip or break resulting in glass fragments in the ice.
- Dispense ice into a glass before filling it with water or other beverages. Splashing may occur if ice is dispensed into a glass that already contains liquid.
- Never use a glass that is exceptionally narrow or deep. Ice may jam in the ice passage and refrigerator performance may be affected.
- Keep the glass at a proper distance from the ice outlet. A glass held too close to the outlet may prevent ice from dispensing.
- To avoid personal injury, keep hands out of the ice door and passage.
- Never remove the dispenser cover.
- If ice or water dispenses unexpectedly, turn off the water supply and contact Sears Home Services at 1-844-553-6667 in the United States and 1-800-469-4663 in Canada.

WHEN TO SET ICEMAKER TO OFF

- When the water supply will be shut off for several hours.
- When the ice bin is removed for more than one or two minutes.
- When the refrigerator will not be used for several days.

NOTE: The ice bin should be emptied when the icemaker ON/OFF button is turned to the OFF mode.

PREPARING FOR VACATION

Set the icemaker ON/OFF button to OFF and shut off the water supply to the refrigerator.

NOTE: The ice bin should be emptied any time the icemaker ON/OFF button is turned OFF.

If the ambient temperature will drop below freezing, have a qualified technician drain the water supply system to prevent serious property damage due to flooding caused by ruptured water lines or connections.

How to use the Automatic Icemaker

- About 8 ice cubes (14~16 times a day) are made at one time. If the ice storage bin is full, ice making stops.
- It is normal for the icemaker to make banging sounds when the ice cubes are falling into the ice storage bin
- To prevent bad odor smell, regularly clean the ice cube's storage bin.
- If the amount of ice in the storage bin is not sufficient, the ice may not be dispensed. Wait a day or so to make more ice.
- If the ice does not dispense easily, ensure the dispenser outlet is not blocked

FOOD STORAGE GUIDE

Wrap or store food in the refrigerator in airtight and moisture-proof material unless otherwise noted. This prevents food odor and taste transfer throughout the refrigerator. For dated products, check date code to ensure freshness.

Items	How to
Butter or margarine	▶Keep opened butter in a covered dish or closed compartment. When storing an extra supply, wrap in freezer packaging and freeze.
Cheese	▶Store in the original wrapping until you are ready to use it. Once opened, rewrap tightly in plastic wrap or aluminum foil.
Milk	▶Wipe milk cartons. For best storage, place milk on interior shelf, not on door shelf.
Eggs	▶Store in original carton on interior shelf, not on door shelf.
Fruit	▶Do not wash or hull the fruit until it is ready to be used. Sort and keep fruit in its original container, in a crisper, or store in a completely closed paper bag on a refrigerator shelf.
Leafy vegetables	▶Remove store wrapping and trim or tear off bruised and discolored areas. Wash in cold water and drain. Place in plastic bag or plastic container and store in crisper.
Vegetables with skins (carrots, peppers)	▶Place in plastic bags or plastic container and store in crisper.
Fish	▶Store fresh fish and shellfish in the freezer section if they are not being consumed the same day of purchase. It is recommended to consume fresh fish and shellfish the same day purchased.
Leftovers	▶Cover leftovers with plastic wrap or aluminum foil, or store in plastic containers with tight lids.

STORING FROZEN FOOD

NOTE: Check a freezer guide or a reliable cookbook for further information about preparing food for freezing or food storage times.

Freezing
Your freezer will not quick-freeze a large quantity of food. Do not put more unfrozen food into the freezer than will freeze within 24 hours (no more than 2 to 3 lbs. of food per cubic foot of freezer space). Leave enough space in the freezer for air to circulate around packages. Be careful to leave enough room at the front so the door can close tightly.

Storage times will vary according to the quality and type of food, the type of packaging or wrap used (how airtight and moisture-proof) and the storage temperature. Ice crystals inside a sealed package are normal. This simply means that moisture in the food and air inside the package have condensed, creating ice crystals.

NOTE: Allow hot foods to cool at room temperature for 30 minutes, then package and freeze. Cooling hot foods before freezing saves energy.

Packaging
Successful freezing depends on correct packaging. When you close and seal the package, it must not allow air or moisture in or out. If it does, you could have food odor and taste transfer throughout the refrigerator and could also dry out frozen food.

Packaging recommendations:
- Rigid plastic containers with tight-fitting lids
- Straight-sided canning/freezing jars
- Heavy-duty aluminum foil
- Plastic-coated paper
- Non-permeable plastic wraps
- Specified freezer-grade self-sealing plastic bags

Follow package or container instructions for proper freezing methods.

Do not use
- Bread wrappers
- Non-polyethylene plastic containers
- Containers without tight lids
- Wax paper or wax-coated freezer wrap
- Thin, semi-permeable wrap

⚠ **CAUTION**: Do not keep beverage cans or plastic food containers in the freezer compartment. They may break or burst if they freeze.

REFRIGERATOR SECTION

WATER DISPENSER

To dispense cold water, push on the dispenser switch with a glass.

NOTE: The dispenser is equipped with a light that turns on when the dispenser pad is engaged.

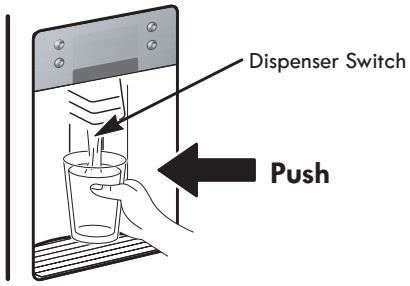

Water

Some dripping may occur after dispensing. Hold your cup beneath the dispenser for a few seconds after dispensing to catch all of the drops.

⚠ **WARNING**: Do not put your fingers up the ice chute opening. Doing so can result in severe injury.

⚠ **CAUTION**: Do not dispense ice into fine china or crystal glasses. China or crystal can break.

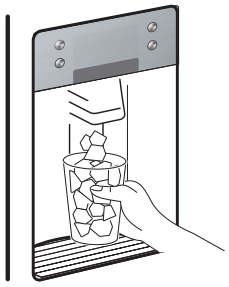

WaterIce cube/crushed ice

Foldaway door bar (mullion bar)

- When closing the left refrigerator door, the mullion bar folds behind the right refrigerator door, forming a seal between the refrigerator doors.

- When opening the left refrigerator door, the mullion bar folds back to the left door automatically.

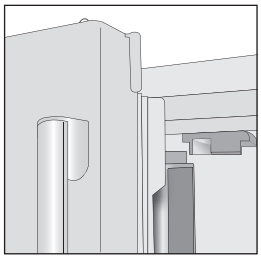

Opening: Mullion bar folds back

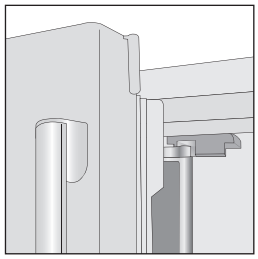

Closing: Mullion bar folds to right

- The mullion bar may become damaged upon closing if it has been extended to the right while the door left door is open.

⚠ **CAUTION**: Before closing the left refrigerator door, make sure the mullion bar is folded back to the left door position or product damage may result.

REFRIGERATOR SHELVES

The shelves in your refrigerator are adjustable to meet your individual storage needs. Your model may have glass or wire shelves.

Adjusting the shelves to fit different heights of items will make finding the exact item you want easier. Doing so will also reduce the amount of time the refrigerator door is open which will save energy.

IMPORTANT: Do not clean glass shelves with warm water while they are cold. Shelves may break if exposed to sudden temperature changes or impact.

⚠ **CAUTION**: Glass shelves are heavy. Use special care when removing them.

Adjusting Shelves (Cantilever)

Remove shelves from the shipping position and replace shelves in the position you want.

To remove a shelf—Tilt up the front of the shelf in the direction of 1 and lift it in the direction of 2 . Pull the shelf out.

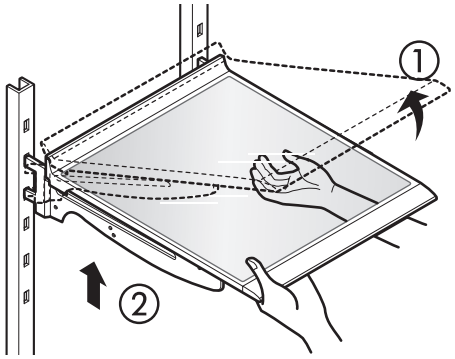

To reinstall a shelf—Tilt the front of the shelf up and guide the shelf hooks into the slots at a desired height. Then, lower the front of the shelf so that the hooks drop into the slots.

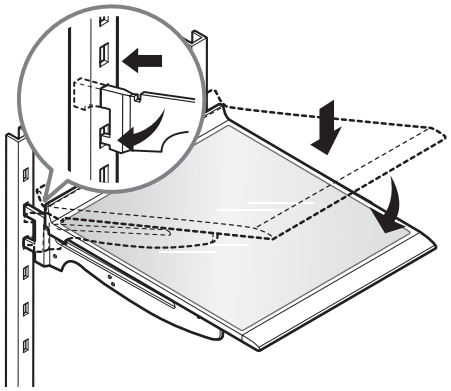

⚠ **CAUTION**: Make sure that shelves are level from one side to the other. Failure to do so may result in the shelf falling or spilling food.

Small top glass shelf

The glass shelf can be removed and placed in the holder underneath the icemaker. This provides room to place taller items such as bottles next to the icemaker.

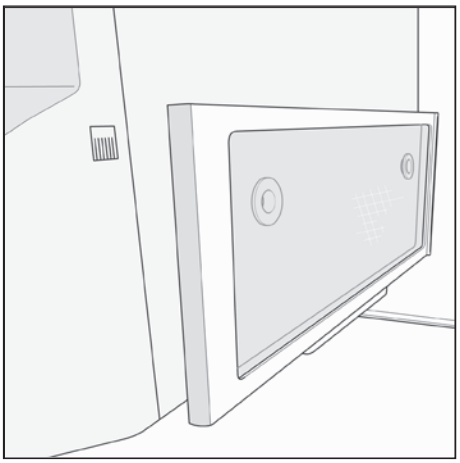

HUMIDITY CONTROLLED CRISPER

The crispers provide fresher tasting fruit and vegetables by letting you easily control humidity inside the drawer.

You can control the amount of humidity in the moisture sealed crispers crispers by adjusting the control to any setting between **VEGETABLES** and **FRUIT**.

- Slide the Humidity Control toward “hi” to keep moist air in crisper for best storage of fresh, leafy vegetables.
- Slide the Humidity Control toward “lo” to release moist air from crisper for best storage of fruit.

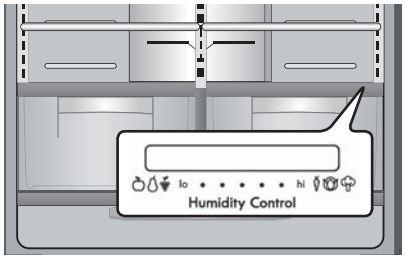

REMOVING THE HUMIDITY CONTROLLED CRISPER

1. To remove, pull the drawer out to full extension.

2. Lift the front of the crisper up, then pull it straight out.

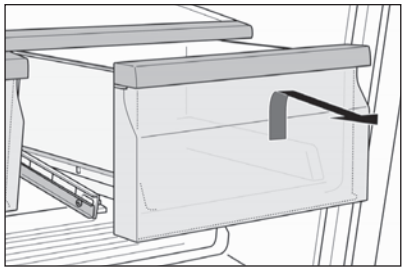

3. To install, slightly tilt up the front, insert the drawer into the frame and push it back into place.

DOOR BIN

The door bins are removable for easy cleaning and adjustment.

1. To remove the bin, simply lift the bin up and pull straight out.
2. To replace the bin, slide it in above the desired support and push down until it snaps into place.

NOTE: Some bins may vary in appearance and will only fit in one location.

⚠ **CAUTION**: Do not overfill or pack items too tightly into door bins. Doing so may cause damage to the bin or personal injury if items are removed with excessive force.

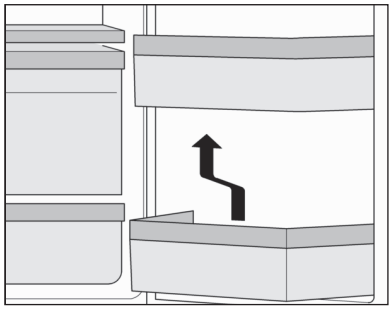

CONNECTING THE WATER LINE

BEFORE YOU BEGIN

This water line installation is not covered by the refrigerator warranty. Follow these instructions carefully to minimize the risk of expensive water damage.

Water hammer (water banging in the pipes) in house plumbing can cause damage to refrigerator parts and can lead to water leakage or flooding. Call a qualified plumber to correct water hamme

⚠ **CAUTION**: To prevent burns and product damage, only connect the refrigerator water line to a cold water supply.

If you use your refrigerator before connecting the water line, make sure the icemaker is turned OFF at the control panel.

⚠ **CAUTION**: Do not install the icemaker tubing in areas where temperatures fall below freezing.

WATER PRESSURE

The water pressure must be from 30 to 125 psi or 207-862 kPa or 2.1-8.8 kgf/cm2. If the refrigerator is installed in an area with low water pressure “below 30 psi”, you can install a booster pump to compensate for the low pressure.

WATER SUPPLY KIT

* Connecting the water line to the refrigerator.

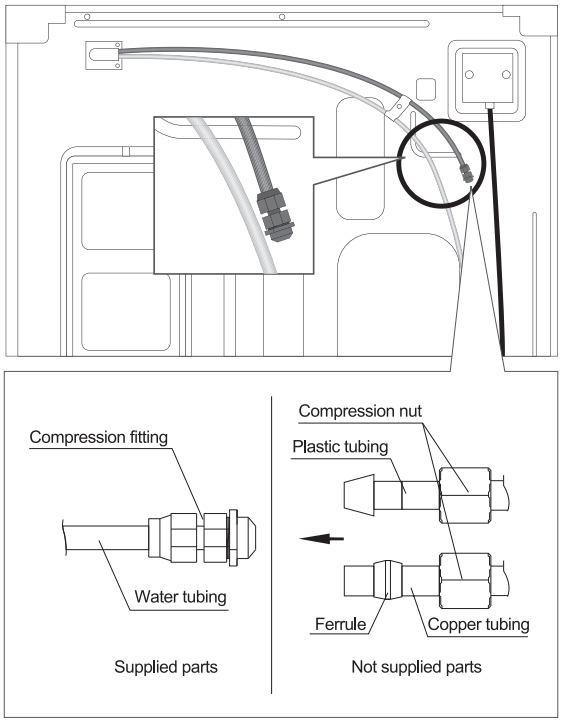

(Necessary parts are available at local service agents.)

1. Connect water line to the compression fitting.
   - If you are using copper tubing (not supplied), slip the compression nut (not supplied) and ferrule (not supplied) on copper tubing.
   - If you are using plastic tubing (not supplied), insert the molded ending of the plastic tubing into the compression fitting.
2. Tighten the compression nut onto the compression fitting.
3. Turn the water on and check for any leakage.

⚠ WARNING

To reduce the risk associated with ingestion of contaminants: Do not use with water that is microbiologically unsafe or of unknown quality without adequate disinfection before and after the system. Systems certified for cyst reduction may be used on disinfected water that may contain filterable cysts. EPA Establishment Number 10350-MN-005

WATER FILTER

1. Disconnect the water supply to the appliance.
2. Remove the locking cap for installing the filter. (The ice and water dispenser can also be used without a water filter, in which bin the locking cap must be used.)
3. Carefully turn the filter clockwise.
4. Change the filter at least once every 6 months.

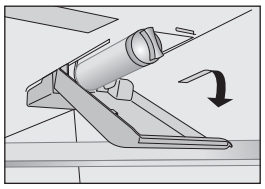
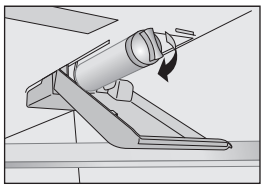

✳ A new filter can purchased at Sears or by calling 1-844-553-6667 in the U.S. and 1-800-469-4663 in Canada.

⚠ **CAUTION**: Wipe with cloth if droplets fall when exchanging a filter. Draw water from the water dispenser for 5 minutes before use. This will remove air from the water system.
Do not dispense water continuously for 5 minutes. Depress and release the dispenser pad for cycles on 30 seconds ON and 60 seconds OFF.

Information concerning the water filter

- After use, the water system is subject to low pressure. Proceed with caution when removing the filter.
- Flush the water system if the appliance has not been in use for a long period of time, or if the ice/water has an unpleasant taste or smell. To do this, dispense water through the water dispenser for several minutes. If the unpleasant taste or smell remains, replace the filter.
- To protect from frost, remove the filter cartridge if you expect the temperature to drop below freezing.
- If pressure surges could occur in the water pipe, do not install the water filter without a suitable surge eliminator. Contact an installation expert if you are not sure whether pressure surges could occur in the water pipe.
- After installing a new filter : Discard any ice produced in the first 24 hours after switching on.
- If no ice has been removed for a long period of time, empty the ice cube bin and discard any ice produced over the next 24 hours.

⚠ WARNING

To reduce the risk associated with ingestion of contaminants: Do not use with water that is microbiologically unsafe or of unknown quality without adequate disinfection before and after the system. Systems certified for cyst reduction may be used on disinfected water that may contain filterable cysts. EPA Establishment Number 10350-MN-005

⚠ CAUTION

To reduce the risk associated with property damage due to water leakage:

- **Read and follow** the Water Filter instructions before installation and use of this system.
- Installation and use **MUST** comply with all state and local plumbing codes.
- **Do not** install if water pressure exceeds 125 psi (862 kPa). Contact a plumbing professional if you are uncertain of how to check your water pressure.
- **Do not** install where water hammer conditions may occur. If water hammer conditions exist, you must install a water hammer arrester. Contact a plumbing professional if you are uncertain of how to check for this condition.
- **Do not** install on hot water supply lines. The maximum operating water temperature of this water filter system is 100°F (38°C).
- **Protect water filter from freezing**. Do not operate refrigerator in ambient conditions below 55°F (12.7°C). Drain water filter when storing unit in temperatures below 40°F (4.4°C).
- The disposable water filter must be replaced every six months, at the rated capacity, or if a noticeable reduction in flow rate occurs.

CARE AND CLEANING



Be sure to unplug first

* Features may vary according to model.

1. Water Dispenser

- Remove the strainer and clean the water collecting tray with a sponge or absorbent cloth.

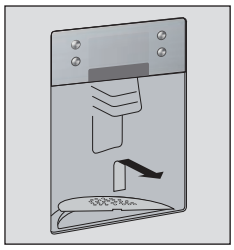

2. Ice Storage Bin

- Removing: Press the release button and remove the ice cube bin.
- Cleaning: Empty the ice cube bin and clean with lukewarm water.
  Thoroughly dry the bin and screw conveyor to prevent new ice cubes from sticking.
- Replacing: Push the ice cube bin all the way back onto the supports until it locks into position.
  If the bin cannot be pushed all the way back, rotate the ice auger a quarter turn and insert again.

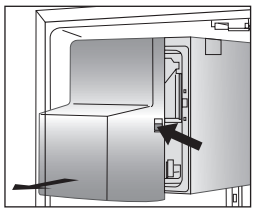

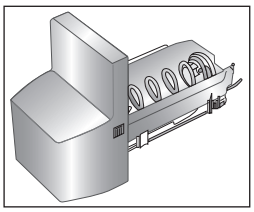

3. Freezer & Refrigerator Bins

- Hold both ends and pull up.

4. Refrigerator Shelves

- Lift up and pull the shelf, unhook and then remove the shelf. You can replace it at varying heights.

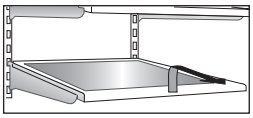

- To place taller items such as bottles, you can you can remove the small glass shelf and place it in the holder under the icemaker.

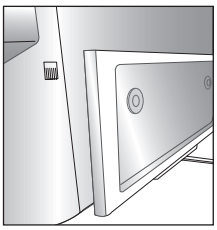

CARE AND CLEANING

LIGHT BULB REPLACEMENT

⚠ WARNING

Electrical Shock Hazard

Before replacing a Compartment Lamp, either unplug the refrigerator or turn off power at the circuit breaker or fuse box.

NOTE: The refrigerator and freezer compartment lights have LED interior lighting, and service should be performed by a qualified technician.

POWER INTERRUPTIONS

1. If the power will be out for 24 hours or less, keep all refrigerator doors closed to help foods stay cold and frozen.
2. If the power will be out for more than 24 hours, remove all frozen food and store it in a frozen food locker.

WHEN YOU GO ON VACATION

If you choose to leave the refrigerator on while you are away, follow these steps to prepare your refrigerator before you leave.

1. Use up any perishables and freeze other items.
2. Turn off the icemaker and empty the ice bin.

If you choose to turn the refrigerator off before you leave, follow these steps.

1. Remove all food from the refrigerator.
2. Clean the refrigerator, wipe it and dry well.
3. Tape rubber or wood blocks to the tops of both doors to prop them open far enough for air to get in. This stops odor and mold from building up.

WHEN YOU MOVE

When you are moving your refrigerator to a new home, follow these steps to prepare it for the move.

1. Remove all food from the refrigerator and pack all frozen food in dry ice.
2. Unplug the refrigerator.
3. Clean, wipe and dry thoroughly.
4. Take out all removable parts, wrap them well and tape them together so they do not shift and rattle during the move. Refer to the **Using your Refrigerator** section for removing instructions.
5. Tape the doors shut and tape the power cord to the refrigerator cabinet.

When you get to your new home, put everything back and refer to the **Refrigerator Installation** section for preparation instructions.

TROUBLESHOOTING GUIDE

COOLING

Problem	Possible Causes	Solutions
Refrigerator and Freezer section are not cooling.	Refrigerator is set to demo mode.	Demo Mode allows the lights and control display to work normally while disabling cooling to save energy while on the showroom floor. Refer to the Setting the Controls section for instructions on how to disable Demo Mode.
	Refrigerator is in the defrost cycle.	During the defrost cycle, the temperature of each compartment may raise slightly. Wait 30 minutes and confirm the proper temperature has been restored once the defrost cycle has completed.
	Refrigerator was recently installed.	It may take up to 24 hours for each compartment to reach the desired temperature.
	Refrigerator was recently relocated.	If the refrigerator was stored for a long period of time or moved on its side, it is necessary for the refrigerator to stand upright for 24 hours before connecting it to power.
Cooling System runs too much.	Refrigerator is replacing an older model.	Modern refrigerators require more operating time but use less energy due to more efficient technology.
	Refrigerator was recently plugged in or power restored.	The refrigerator will take up to 24 hours to cool completely.
	Door opened often or a large amount of food / hot food was added.	Adding food and opening the door warms the refrigerator, requiring the compressor to run longer in order to cool the refrigerator back down. In order to conserve energy, try to get everything you need out of the refrigerator at once, keep food organized so it is easy to find, and close the door as soon as the food is removed. (Refer to the Food Storage Guide.)
	Doors are not closed completely.	Firmly push the doors shut. If they will not shut all the way, see the Doors will not close completely or pop open section in Parts & Features Troubleshooting.
	Refrigerator is installed in a hot location.	The compressor will run longer under warm conditions. At normal room temperatures (70°F) expect your compressor to run about 40% to 80% of the time. Under warmer conditions, expect it to run even more often. The refrigerator should not be operated above 110°F.
	Condenser / back cover is clogged.	Use a vacuum cleaner with an attachment to clean the condenser cover and vents. Do not remove the panel covering the condenser coil area.

TROUBLESHOOTING GUIDE

COOLING

Problem	Possible Causes	Solutions
Refrigerator or Freezer section is too warm.	Refrigerator was recently installed.	It may take up to 24 hours for each compartment to reach the desired temperature.
	Doors are opened often or for long periods of time.	When the doors are opened often or for long periods of time, warm, humid air enters the compartment. This raises the temperature and moisture level within the compartment. To lessen the effect, reduce the frequency and duration of door openings.
	Unit is installed in a hot location.	The refrigerator should not be operated in temperatures above 110F.
	A large amount of food or hot food was added to either compartment.	Adding food warms the compartment requiring the cooling system to run. Allowing hot food to cool to room temperature before putting it in the refrigerator will reduce this effect.
	Doors not closed correctly.	See the Doors will not close correctly or pop open section in Parts & Features Troubleshooting
	Temperature control is not set correctly.	If the temperature is too warm, adjust the control one increment at a time and wait for the temperature to stabilize. Refer to the Setting the Controls section for more information.
	Defrost cycle has recently completed.	During the defrost cycle, the temperature of each compartment may raise slightly and condensation may form on the back wall. Wait 30 minutes and confirm the proper temperature has been restored once the defrost cycle has completed.
Interior moisture buildup.	Doors are opened often or for long periods of time.	When the doors are opened often or for long periods of time, warm, humid air enters the compartment. This raises the temperature and moisture level within the compartment. To lessen the effect, reduce the frequency and duration of door openings.
	Doors not closed correctly.	See the Doors will not close correctly section in the Troubleshooting section.
	Weather is humid.	Humid weather allows additional moisture to enter the compartments when the doors are opened leading to condensation or frost. Maintaining a reasonable level of humidity in the home will help to control the amount of moisture that can enter the compartments.
	Defrost cycle recently completed.	During the defrost cycle, the temperature of each compartment may raise slightly and condensation may form on the back wall. Wait 30 minutes and confirm that the proper temperature has been restored once the defrost cycle has completed.
	Food is not packaged correctly.	Food stored uncovered or unwrapped, and damp containers can lead to moisture accumulation within each compartment. Wipe all containers dry and store food in sealed packaging to prevent condensation and frost.

TROUBLESHOOTING GUIDE

COOLING/ICE & WATER

Problem	Possible Causes	Solutions
Food is freezing in the refrigerator compartment.	Food with high water content was placed near an air vent.	Rearrange items with high water content away from air vents.
	Refrigerator temperature control is set incorrectly.	If the temperature is too cold, adjust the control one increment at a time and wait for the temperature to stabilize. Refer to the Setting the Controls section for more information.
	Refrigerator is installed in a cold location.	When the refrigerator is operated in temperature below 41°F (5°C), food can freeze in the refrigerator compartment. The refrigerator should not be operated in temperature below 55°F (13°C).
Frost or ice crystals form on frozen food (outside of package).	Door is opened frequently or for long periods of time.	When the doors are opened often or for long periods of time, warm, humid air enters the compartment. This raises the temperature and moisture level within the compartment. Increased moisture will lead to frost and condensation. To lessen the effect, reduce the frequency and duration of door openings.
	Door is not closing properly.	Refer to the Doors will not close correctly or pop open section in the Troubleshooting section.
Refrigerator or Freezer section is too cold.	Incorrect temperature control settings.	If the temperature is too cold, adjust the control one increment at a time and wait for the temperature to stabilize. Refer to the Setting the Controls section for more information.
Frost or ice crystals on frozen food (inside of sealed package).	Condensation from food with a high water content has frozen inside of the food package.	This is normal for food items with a high water content.
	Food has been left in the freezer for a long period of time.	Do not store food items with high water content in the freezer for a long period of time.
Icemaker is not making enough ice.	Demand exceeds ice storage capacity.	The icemaker will produce approximately 70-182 cubes in a 24 hour period.
	House water supply is not connected, valve is not turned on fully, or valve is clogged.	Connect the refrigerator to a cold water supply with adequate pressure and turn the water shutoff valve fully open. If the problem persists, it may be necessary to contact a plumber.
	Water filter has been exhausted.	It is recommended that you replace the water filter: Approximately every six months. • When the water filter indicator turns on. • When the water dispenser output decreases. • When the ice cubes are smaller than normal.
	Low house water supply pressure.	**NOTE:** The water pressure must be from 30 to 125 psi or 207-862 kPa or 2.1-8.8 kgf/cm^2. If the refrigerator is installed in an area with low water pressure below 30 psi, you can install a booster pump to compensate for the low pressure. If the problem persists, it may be necessary to contact a plumber or install a booster pump to compensate for the low pressure.
	Reverse Osmosis filtration system is used.	Reverse osmosis filtration systems can reduce the water pressure below the minimum amount and result in icemaker issues. (Refer to Water Pressure section.)
	Tubing connecting refrigerator to house supply valve is kinked.	The tubing can kink when the refrigerator is moved during installation or cleaning resulting in reduced water flow. Straighten or repair the water supply line and arrange it to prevent future kinks.

TROUBLESHOOTING GUIDE

ICE & WATER

Problem	Possible Causes	Solutions
Icemaker is not making enough ice (continued).	Doors are opened often or for long periods of time.	If the doors of the unit are opened often, ambient air will warm the refrigerator which will prevent the unit from maintaining the set temperature. Lowering the refrigerator temperature can help, as well as not opening the doors as frequently.
	Doors are not closed completely.	If the doors are not properly closed, ice production will be affected. See the Doors will not close completely or pop open section in Parts & Features Troubleshooting for more information.
	The temperature setting for the freezer is too warm.	The recommended temperature for the freezer compartment for normal ice production is 0°F. If the freezer temperature is warmer, ice production will be affected.
Dispensing water slowly.	Water filter has been exhausted.	It is recommended that you replace the water filter: Approximately every six months. • When the water filter indicator turns on. • When the water dispenser output decreases. • When the ice cubes are smaller than normal.
	Low house water supply pressure.	**NOTE:** The water pressure must be from 30 to 125 psi or 207-862 kPa or 2.1-8.8 kgf/cm^2. If the refrigerator is installed in an area with low water pressure below 30 psi, you can install a booster pump to compensate for the low pressure. If the problem persists, it may be necessary to contact a plumber or install a booster pump to compensate for the low pressure.
Not dispensing ice.	Doors are not closed completely.	Ice will not dispense if any of the refrigerator doors are left open.
	Infrequent use of the dispenser.	Infrequent use of the ice dispenser will cause the cubes to stick together over time, which will prevent them from properly dispensing. Check the ice bin for ice cubes clumping/sticking together. If they are, break up the ice cubes to allow for proper operation.
	The delivery chute is clogged with frost or ice fragments.	Eliminate the frost or ice fragments by removing the ice bin and clearing the chute with a plastic utensil. Dispensing cubed ice can also help prevent frost or ice fragment buildup.
	The dispenser display is locked.	Press and hold the Lock button for three seconds to unlock the control panel and dispenser.
	Ice bin is empty.	It may take up to 24 hours for each compartment to reach the desired temperature and for the icemaker to begin making ice. Make sure that the shutoff (arm/sensor) is not obstructed. Once the ice supply in the bin has been completely exhausted, it my take up to 90 minutes before additional ice is available, and approximately 24 hours to completely refill the bin.

TROUBLESHOOTING GUIDE

ICE & WATER

Problem	Possible Causes	Solutions
Icemaker is not making ice.	Refrigerator was recently installed or icemaker recently connected.	It may take up to 24 hours for each compartment to reach the desired temperature and for the icemaker to begin making ice.
	Icemaker not turned on.	Locate the icemaker on/of button and confirm that it is turned ON.
	The refrigerator is not connected to a water supply or the supply shutoff valve is not turned on.	Connect refrigerator to the water supply and turn the water shutoff valve fully open.
	Icemaker shutoff (feeler arm) obstructed.	If your icemaker is equipped with an ice shutoff arm, make sure that the arm moves freely.
Not dispensing water.	New installation or water line recently connected.	Dispense 2.5 gallons of water (flush for approximately 5 minutes) to remove trapped air and contaminates from the system. Do not dispense the entire 2.5 gallon amount continuously. Depress and release the dispenser pad for cycles of 30 seconds ON and 60 seconds OFF.
	The dispenser panel is locked.	Press and hold the Lock button for three seconds to unlock the control panel and dispenser.
	The dispenser is not set for water dispensing.	The dispenser can be set for ice or water. Make certain that the control panel is set for the proper operation. Press the Water button on the control panel to dispense water.
	Refrigerator or freezer doors are not closed properly.	Water will not dispense if any of the refrigerator doors are left open.
	Water filter has been recently removed or replaced.	After the water filter is replaced, dispense 2.5 gallons of water (flush for approximately 5 minutes) to remove trapped air and contaminates from the system. Do not dispense the entire 2.5 gallon amount continuously. Depress and release the dispenser pad for cycles of 30 seconds ON and 60 seconds OFF.
	Tubing connecting refrigerator to house supply valve is kinked.	The tubing can kink when the refrigerator is moved during installation or cleaning resulting in reduced water flow. Straighten or repair the water supply line and arrange it to prevent future kinks.
	The house water supply is not connected, the valve is not turned on fully, or the valve is clogged.	Connect refrigerator to the water supply and turn the water shutoff valve fully open. If the problem persists, it may be necessary to contact a plumber.

TROUBLESHOOTING GUIDE

ICE & WATER

Problem	Possible Causes	Solutions
Ice has bad taste or odor.	Water supply contains minerals such as sulfur.	A water filter may need to be installed to eliminate taste and odor problems. NOTE: In some cases, a filter may not help. It may not be possible to remove all minerals / odor / taste in all water supplies.
	Icemaker was recently installed.	Discard the first few batches of ice to avoid discolored or bad tasting ice.
	Ice has been stored for too long.	Ice that has been stored for too long will shrink, become cloudy, and may develop a stale taste. Throw away old ice and make a new supply.
	The food has not been stored properly in either compartment.	Rewrap the food. Odors may migrate to the ice if food is not wrapped properly.
	The interior of the refrigerator needs to be cleaned.	See the Care and Cleaning section for more information.
	The ice storage bin needs to be cleaned.	Empty and wash the bin (discard old cubes). Make sure that the bin is completely dry before reinstalling it.
Dispensing warm water.	Refrigerator was recently installed.	Allow 24 hours after installation for the water storage tank to cool completely.
	The water dispenser has been used recently and the storage tank was exhausted.	Depending on your specific model, the water storage capacity will range from approximately 20 to 30 oz.
	Dispenser has not been used for several hours.	If the dispenser has not been used for several hours, the first glass dispensed may be warm. Discard the first 10 oz.
	Refrigerator is connected to the hot water supply.	Make sure that the refrigerator is connected to a cold water pipe. ⚠ WARNING: Connecting the refrigerator to a hot water line may damage the icemaker.
Water has bad taste or odor.	Water supply contains minerals such as sulfur.	A water filter may need to be installed to eliminate taste and odor problems.
	Water filter has been exhausted.	It is recommended that you replace the water filter: Approximately every 6 months. • When the water filter indicator turns on. • When the water dispenser output decreases. • When the ice cubes are smaller than normal.
	Refrigerator was recently installed.	Dispense 2.5 gallons of water (flush for approximately 5 minutes) to remove trapped air and contaminates from the system. Do not dispense the entire 2.5 gallon amount continuously. Depress and release the dispenser pad for cycles of 30 seconds ON and 60 seconds OFF.
Icemaker is making too much ice.	Icemaker shutoff (feeler arm) is obstructed.	Empty the ice bin. If your icemaker is equipped with an ice shutoff arm, make sure that the arm moves freely. Reinstall the ice bin and wait 24 hours to confirm proper operation.

TROUBLESHOOTING GUIDE

NOISE

Problem	Possible Causes	Solutions
Clicking	The defrost control will click when the automatic defrost cycle begins and ends. The thermostat control (or refrigerator control on some models) will also click when cycling on and off.	Normal Operation
Rattling	Rattling noises may come from the flow of refrigerant, the water line on the back of the unit, or items stored on top of or around the refrigerator.	Normal Operation
	Refrigerator is not resting solidly on the floor.	Floor is weak or uneven or leveling legs need to be adjusted. See the Door Alignment section.
	Refrigerator with linear compressor was jarred while running.	Normal Operation
Whooshing	Evaporator fan motor is circulating air through the refrigerator and freezer compartments.	Normal Operation
	Air is being forced over the condenser by the condenser fan.	Normal Operation
Gurgling	Refrigerant flowing through the cooling system.	Normal Operation
Popping	Contraction and expansion of the inside walls due to changes in temperature.	Normal Operation
Sizzling	Water dripping on the defrost heater during a defrost cycle.	Normal Operation
Vibrating	If the side or back of the refrigerator is touching a cabinet or wall, some of the normal vibrations may make an audible sound.	To eliminate the noise, make sure that the sides and back cannot vibrate against any wall or cabinet.
Dripping	Water running into the drain pan during the defrost cycle.	Normal Operation
Pulsating or High-Pitched Sound	Your refrigerator is designed to run more efficiently to keep your food items at the desired temperature. The high efficiency compressor may cause your new refrigerator to run longer than your old one, but it is still more energy efficient than previous models. While the refrigerator is running, it is normal to hear a pulsating or highpitched sound.	Normal Operation

TROUBLESHOOTING GUIDE

PARTS & FEATURES

Problem	Possible Causes	Solutions
Doors will not close correctly or pop open.	Food packages are blocking the door open.	Rearrange food containers to clear the door and door shelves.
	Ice bin, crisper cover, pans, shelves, door bins, or baskets are out of position.	Push bins all the way in and put crisper cover, pans, shelves and baskets into their correct positions. See the Using Your Refrigerator section for more information.
	The doors were removed during product installation and not properly replaced.	Remove and replace the doors according to the Removing and Replacing Refrigerator Handles and Doors section.
	Refrigerator is not leveled properly.	See Door Alignment in the Refrigeration Installation section to level refrigerator.
Doors are difficult to open.	The gaskets are dirty or sticky.	Clean the gaskets and the surfaces that they touch. Rub a thin coat of appliance polish or kitchen wax on the gaskets after cleaning.
	Door was recently closed.	When you open the door, warmer air enters the refrigerator. As the warm air cools, it can create a vacuum. If the door is hard to open, wait one minute to allow the air pressure to equalize, then see if it opens more easily.
Refrigerator wobbles or seems unstable.	Leveling legs are not adjusted properly.	Refer to the Leveling and Door Alignment section.
	Floor is not level.	It may be necessary to add shims under the leveling legs or rollers to complete installation.
Lights do not work.	LED interior lighting failure.	The refrigerator compartment lamp is LED interior lighting, and service should be performed by a qualified technician. Refer to the Light Bulb Replacement section.
Refrigerator has an unusual odor.	The Air Filter may need to be set to the MAX setting or replaced.	Set the Air Filter to the MAX setting. If the odor does not go away within 24 hours, the filter may need to be replaced. See the Replacing the Air Filter section for replacement instructions.
The interior of the refrigerator is covered with dust or soot.	The refrigerator is located near a fire source, such as a fireplace, chimney or candle.	Make sure that the refrigerator is not located near a fire source, such as a fireplace, chimney or candle.

⚠ WARNING

STATE OF CALIFORNIA
PROPOSITION 65 WARNINGS

The California Safe Drinking Water and Toxic Enforcement Act requires the Governor of California to publish a list of substances known to the State of California to cause cancer. birth defects. or other reproductive harm, and requires businesses to warn of potential exposure to such substances.
This product contains a chemical known to the State of California to cause cancer. birth defects, or other reproductive harm. This appliance can cause low-level exposure to some of the substances listed, including benzene, formaldehyde. And carbon monoxide.

⚠ WARNING

CRITICAL DISPOSAL WARNINGS

- DANGER : Risk of child entrapment.
  Before you throw away your old refrigerator or freezer:
- Take off the doors and door latch.
- Leave the shelves in place so that children cannot easily climb inside.
- Ensure that none of the pipes on the back of the appliance are damaged or broken prior to disposal.
- Either R-600a or R-134a is used as a refrigerant.
  Check the compressor label on the rear of the appliance or the rating label inside the refrigerator to see which refrigerant is used in your refrigerator.
  If your refrigerator contains R-600a. which is highly flammable. contact your local authorities regarding the safe disposal of this product.
  Cyclopentane is used in the insulation of this refrigerator. Consequently, the insulation material in the refrigerator requires special disposal procedures. Please contact your local authorities regarding the environmentally safe disposal of this product.
- When disposing of this or any other refrigerator, remove the door/door seals and door latch so that children or animals cannot become trapped inside. Children should be supervised to ensure that they do not play with or enter the appliance.
- If trapped inside. a child may get hurt or suffocate to death.
  Please dispose of the packaging material for this product in an environmentally friendly manner.
  Keep all packaging materials well out of the reach of children. as packaging materials can be dangerous to children.
- If a child places a bag over his or her head. The child could suffocate.

ADDITIONAL TIPS FOR PROPER USAGE

- In the event of a power failure. call the local office of your Electricity Company and ask how long it is going to last.
- Most power failures that are corrected within an hour or two will not affect your refrigerator temperatures. However. you should minimize the number of door openings while the power is off.
  If the power failure lasts more than 24 hours, remove all frozen food..
- If keys are provided with the refrigerator, the keys should be kept out of the reach of children and not be in the vicinity of the appliance.
- The appliance might not operate consistently (frozen contents can thaw or temperatures can become too warm in the frozen food compartment) when sited for an extended period of time in a location where ambient air temperatures are constantly below the temperatures for which the appliance is designed.
- Do not store food which goes bad easily at low temperatures. such as bananas and melons.
- Your appliance is frost free, which means there is no need to manually defrost your appliance.
  This will be carried out automatically.
- Temperature rise during defrosting complies with ISO requirements. But. If you want to prevent an undue rise in the temperature of the frozen food while the appliance defrosts, wrap the frozen food in several layers of newspaper.
- Any increase in temperature of frozen food during defrosting can shorten its storage life.
- Do not re-freeze frozen foods that have thawed completely.

Universal Keywords: Div46 Src111 Daewoo Mechtech
Document Specific Keywords: Owner’s Manual
Date: 102116
Document Name: 111.7304om
Subject: Daewoo Kenmore BTM Refrigerator 111.7304 Owner's Manual
Models: 111.73045610 111.73042610 111.73049610 11173045610 11173042610 11173049610