SOGEDIS ELECTROMENAGER	**130 – MODEL (UP)** **THERMOSTAT SETTING**	SOGEDIS ELECTROMENAGER

Thermostat Control

The thermostat automatically regulates the temperature inside the cooler and freezer compartments. Refrigerator temperatures can be obtained by rotating the knob to higher numbers; 1 to 3, 1 to 5 or SF

Important note: Do not try to rotate the knob beyond position 1, it will stop your appliance from working.

Thermostat settings:
1 – 2 : For short-term storage of food
3 – 4 : For long-term storage of food
5 : Maximum cooling position. The appliance will work longer.If required, change the temperature setting.
If device has SF position:
• Turn the knob to SF to freeze fresh food quickly. In this position, the freezer compartment will operate at lower temperatures. After your food freezes, turn the thermostat knob to its normal use position. If you do not change the SF position, your appliance work will automatically return to its last used thermostat position according to the time indicated in the note. Return the thermostat switch to the SF position and return it to normal use according to the time indicated in the note. If the thermostat switch is in the SF position when your appliance is first started, your appliance work will automatically return to the operation in the thermostat-3 position according to the time indicated in the note.

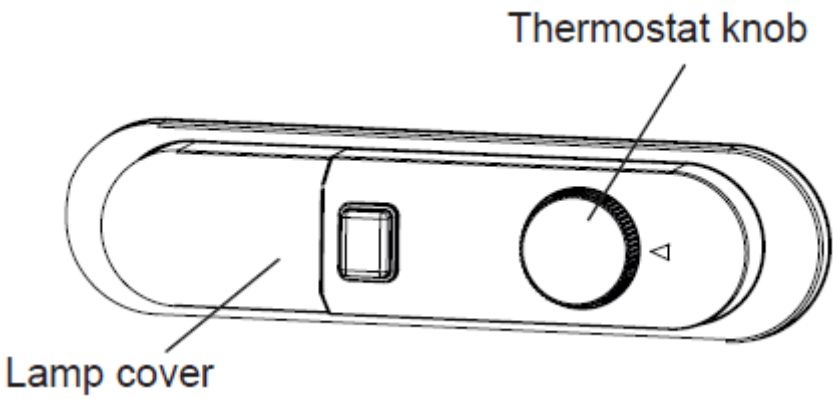

Super freezing: This switch shall be used as superfreeze switch. For maximum freezing capacity, please turn on this switch before 24 hours placing fresh food. After placing fresh food in the freezer, 24 hours ON position is generally sufficient. In order to save energy, please turn off this switch after 24 hours from placing fresh food.

MAY 2021

1. Lie down the appliance to the left side and dismantle both leveling foot.

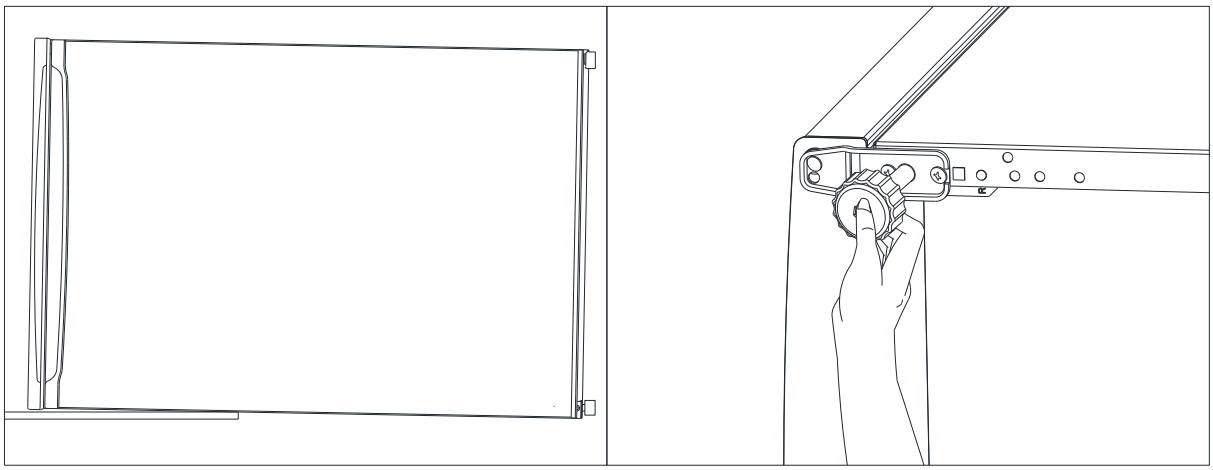

2. Unscrew the bottom hinge fixing screws and remove it.
Unscrew the bottom hinge pin and screw in the next hole.

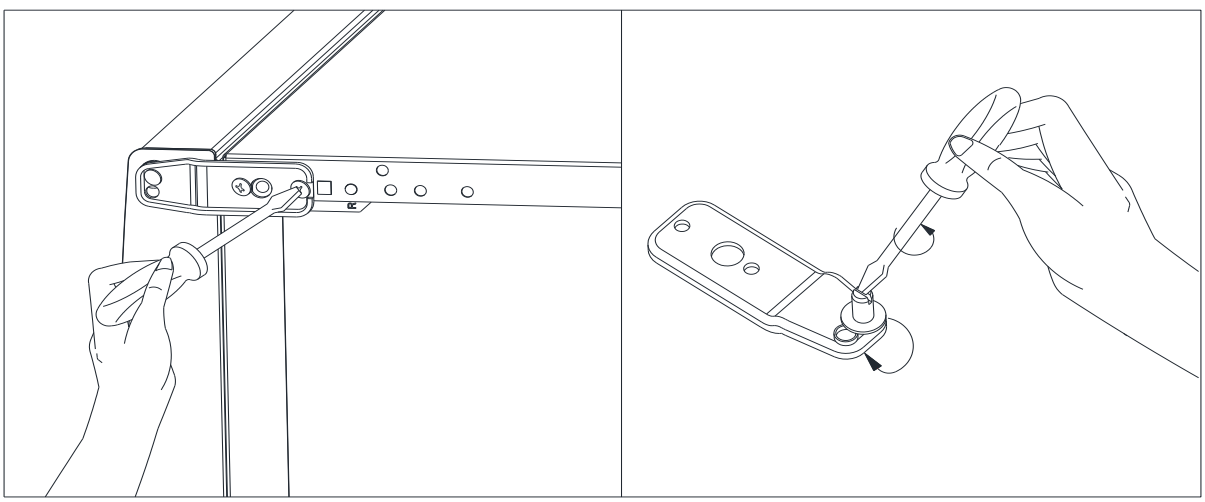

3. Remove the door.

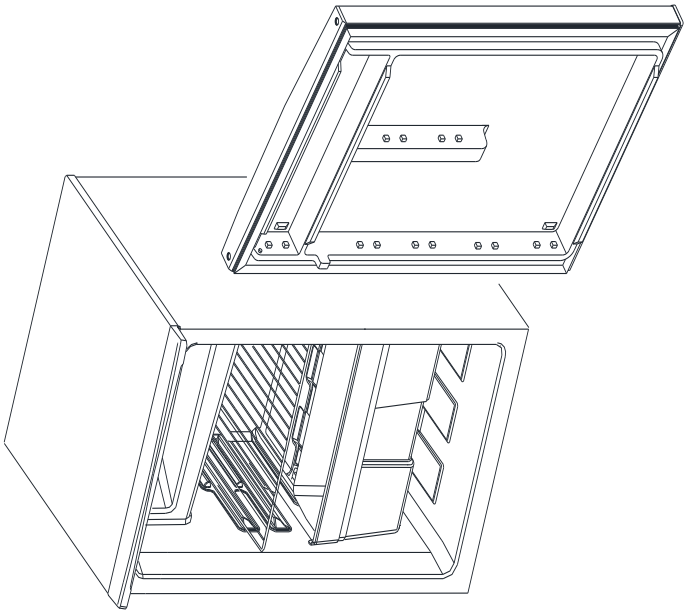

4. Remove the top hinge cover and unscrew the the top hinge and screw the hinge on the left hole of the top panel. Close the top hinge cover.

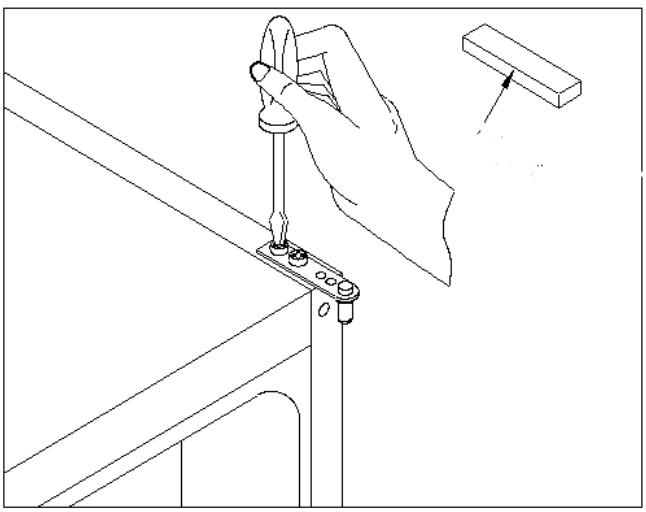

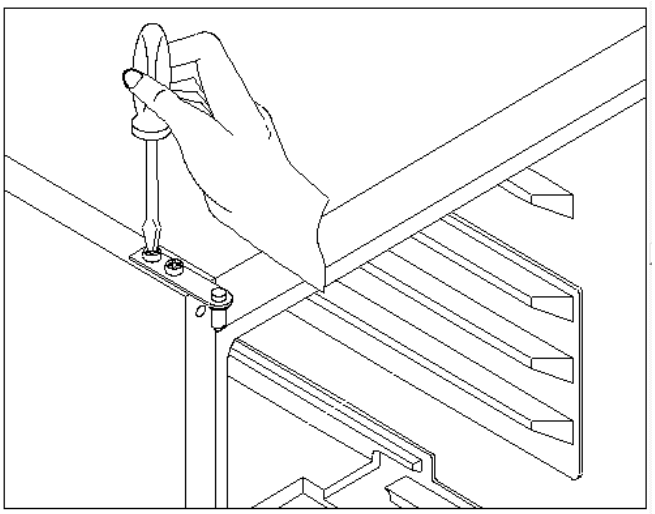

5. Replace the top bushing and top bushing cap.
Remove the bottom bushing and assemble it to the left side.

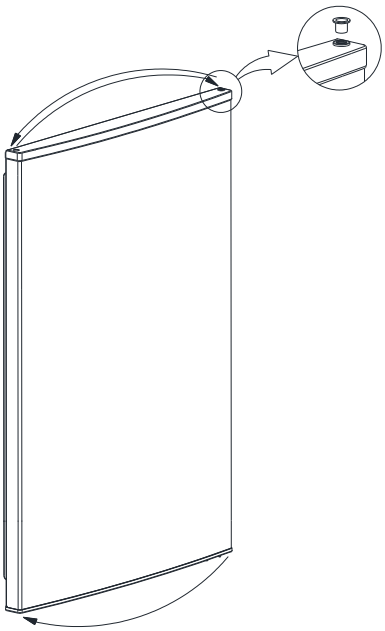

6. Assemble the door to the top hinge. (Reverse operation of item 3)
Screw the bottom hinge to the left side.
Finally, screw the leveling foot to right side.

Changing The Freezer Door Swing Direction

1. Unscrew the two screws fixing the freezer door hinge and remove the freezer door.

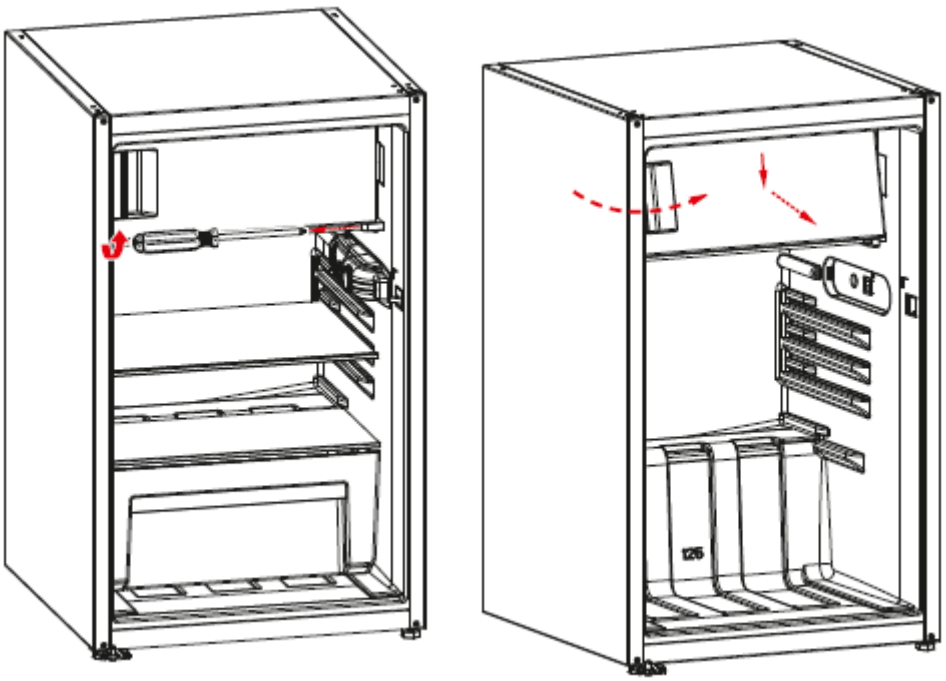

2. Unscrew the screw fixing the freezer door holder and remove it.
Then screw it to the right side.

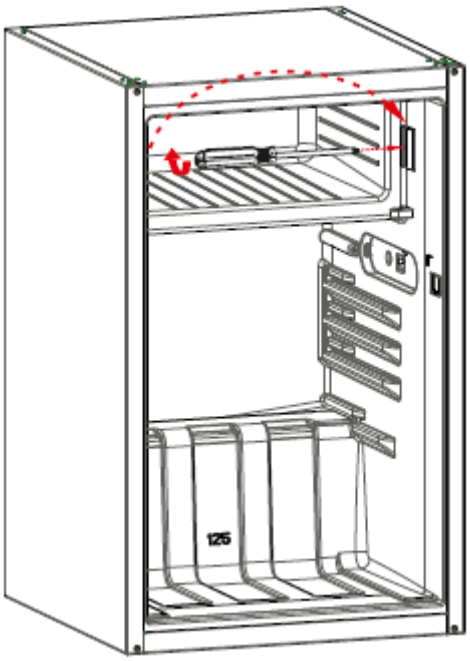

3. Remove the freezer door hinge and insert it to the left side.

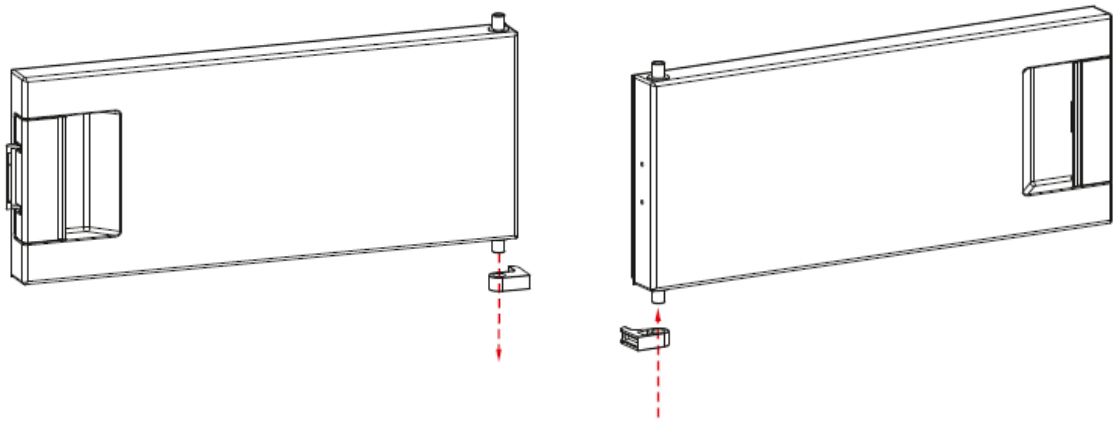

4. Assemble the freezer door and fix the freezer door hinge by tighting the screws.

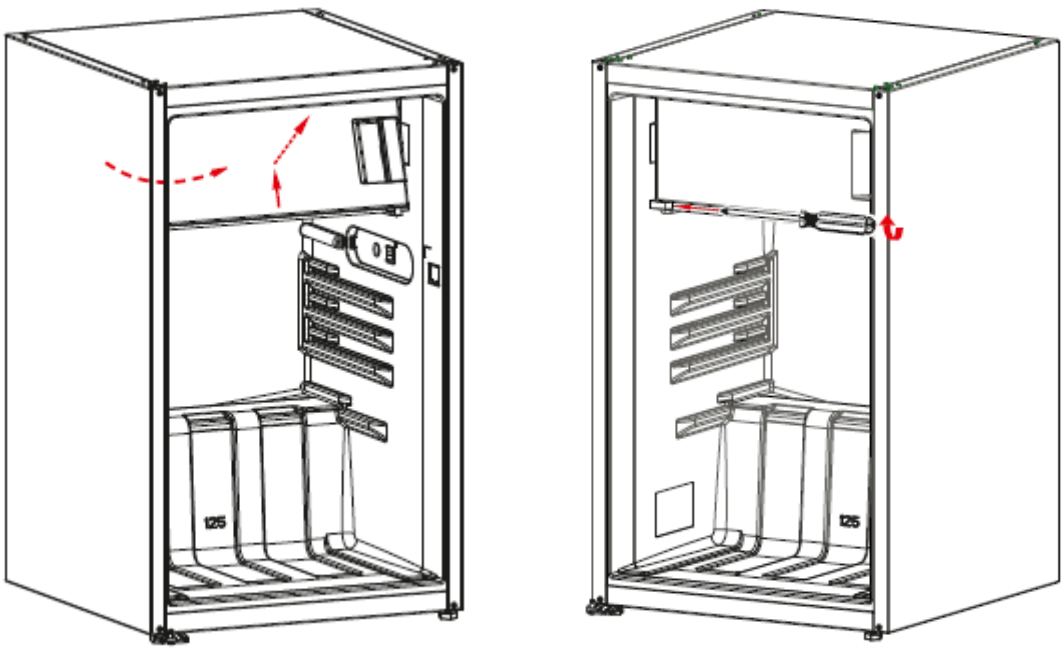

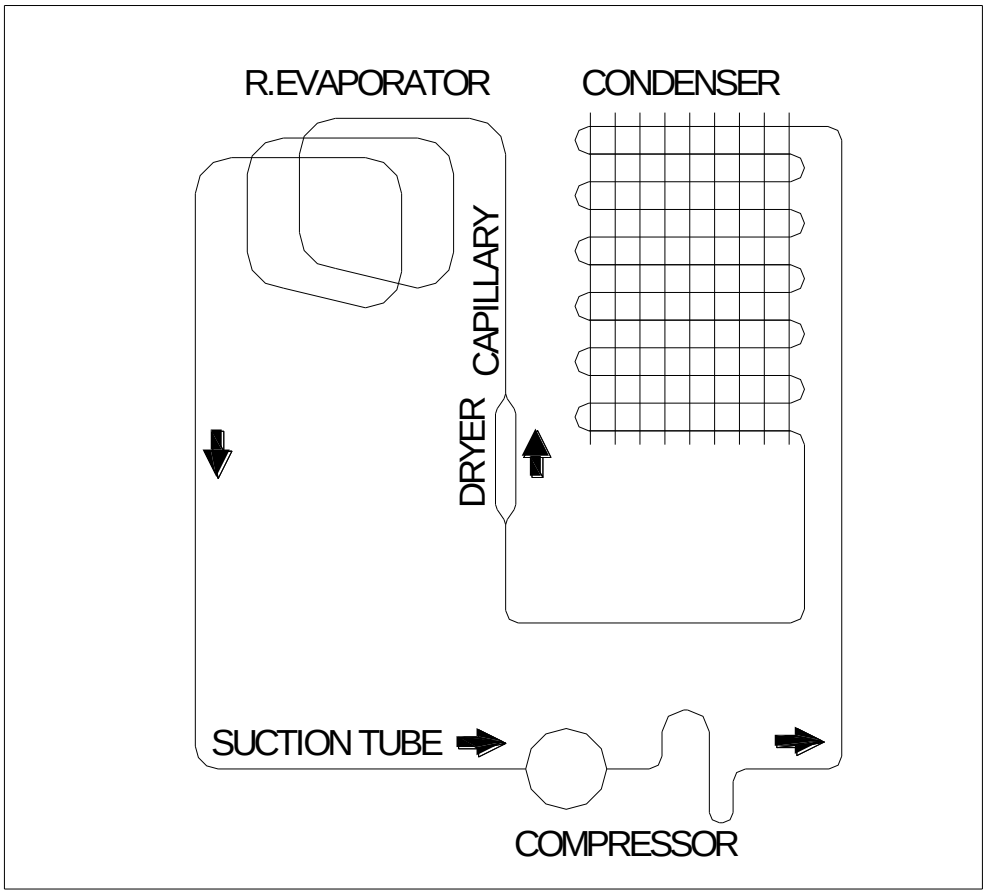
R.EVAPORATOR
CONDENSER
CAPILLARY
DRYER
SUCTION TUBE
COMPRESSOR

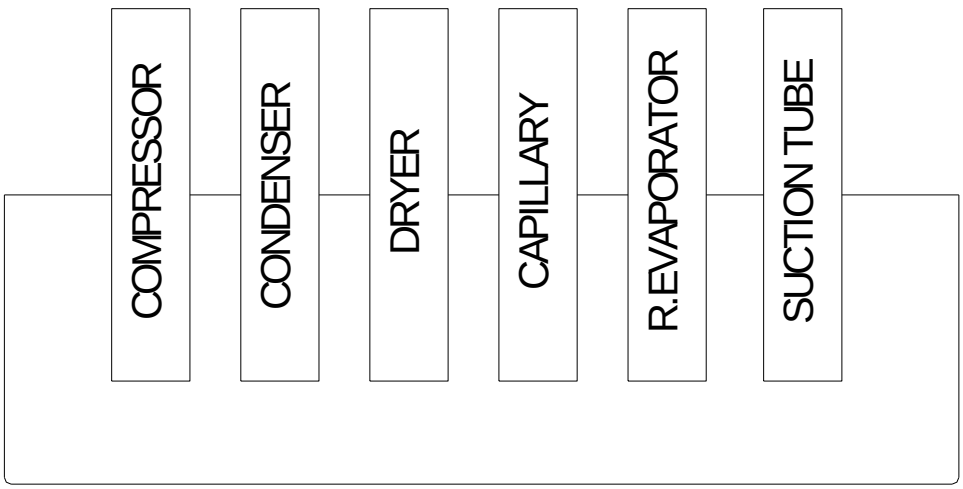
COMPRESSOR
CONDENSER
DRYER
CAPILLARY
R.EVAPORATOR
SUCTION TUBE

CAUTION:
The plug must be pulled out before the thermostat lamp / led is removed.

Replacement of Lamp

1- Unplug your fridge.
2- Remove the cover of the box from the claws using a screwdriver.
3- Replace with a bulb of maximum 15 Watts.
4- Install the cover.
5- Wait for 5 minutes before re-plugging and bring the thermostat to its original position.

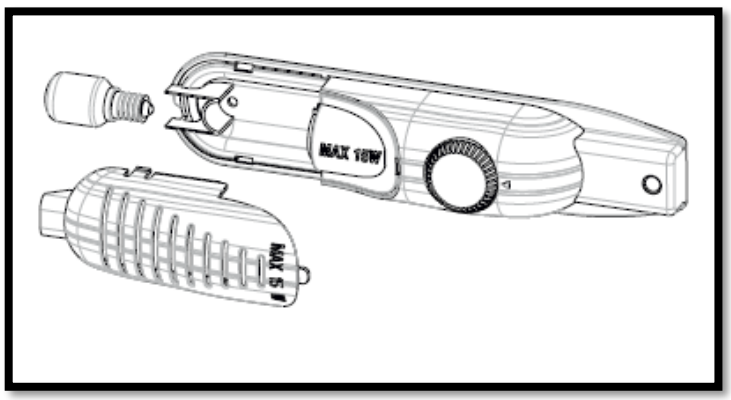

Replacement of LED

Screwdriver into the gap and remove the led cover.

Remove screw led

Disconnect the connector and change the led.







SOGEDIS ELECTROMENAGER	**130 – MODEL (UP)** **REPLECAMENT OF THERMOSTAT**	SOGEDIS ELECTROMENAGER

CAUTION: The plug must be pulled out before the thermostat is removed.

Remove screw which is attached one side of the termostat





Firstly take off the button and screw and then take off all cable connection and pull thermostat bulb out





Take off the lamp cover, cable connection and screw at below picture





Firstly cut off the black band and change the thermostat





Place the thermostat, screws is tightened, insert the button
Connect cables as shown below

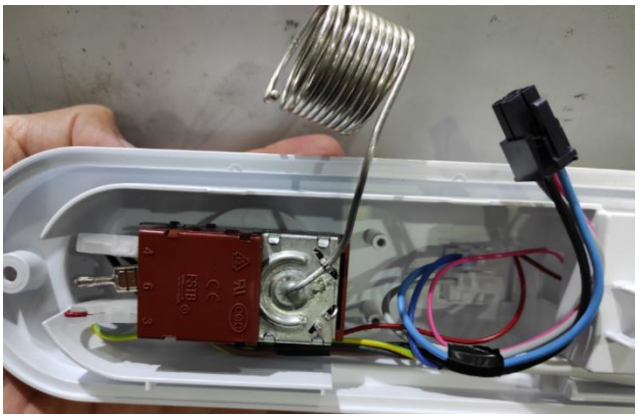

Send the thermostat bulb pipe throughout the hole until it end
Plug the black socket to the frige
Close the lamp cover ve screw is tightened which are attached one side of the termostat.

Vestel refrigerator serial numbers are consist of 22 digits.

