600 / 400 / 150 litre series Refrigerators/Freezers

Instruction manual



Model • Modèle • Modell • Modello • Modelo • Malli:

CD080-A/CD081-A/CD082-A/CD083-A/CD084-A/CD085-A/CD610-A/CD611-A/ CD612-A/CD613-A/CD614-A/CD615-A/CD086-A/CD087-A/CD088-A

Safety Tips

- Position on a flat, stable surface.
- A service agent/qualified technician should carry out installation and any repairs if required. Do not remove any components or service panels on this product.
- Consult Local and National Standards to comply with the following:
  - Health and Safety at Work Legislation
  - Fire Precautions
  - Wiring Regulations
  - Building Regulations
- DO NOT use jet/pressure washers to clean the appliance.
- DO NOT use the appliance outside.
- DO NOT use this appliance to store medical supplies.
- DO NOT allow oil or fat to come into contact with the plastic components or door seal. Clean immediately if contact occurs.
- DO NOT store products on top of the appliance.
- Bottles that contain a high percentage of alcohol must be sealed and placed vertically in the refrigerator.
- Always carry, store and handle the appliance in a vertical position and move by holding the base of the appliance.
- Always switch off and disconnect the power supply to the unit before cleaning.
- Keep all packaging away from children. Dispose of the packaging in accordance with the regulations of local authorities.
- If the power cord is damaged, it must be replaced by a POLAR agent or a recommended qualified technician in order to avoid a hazard.
- Children should be supervised to ensure that they do not play with the appliance.

CD610-A-CD615-A_CD080-A-CD088-A_A5_v10_20201208.indb 2 2020/12/8 15:39

- This appliance is not intended for use by persons (including children) with reduced physical, sensory or mental capabilities, or lack of experience or knowledge, unless they have been given supervision or instruction concerning the use of the appliance by a person responsible for their safety.
- POLAR recommend that this appliance should be periodically tested (at least annually) by a Competent Person. Testing should include, but not be limited to: Visual Inspection, Polarity Test, Earth Continuity, Insulation Continuity and Functional Testing.



Caution Risk of Fire

- Do not store explosive substances such as aerosol cans with a flammable propellant in this appliance.



Warning: Keep all ventilation openings clear of obstruction. Unit should not be boxed in without adequate ventilation.

- **Warning:** Do not use mechanical devices or other means to accelerate the defrosting process, other than those recommended by the manufacturer.
- **Warning:** Do not damage the refrigerant circuit.
- **Warning:** Do not use electrical appliances inside the food storage compartments of the appliance, unless they are the type recommended by the manufacturer.

Product Description

- CD080-A - 150 litre Refrigerator
- CD081-A - 140 litre Freezer
- CD082-A - 400 litre Refrigerator
- CD083-A - 365 litre Freezer
- CD084-A - 600 litre Refrigerator
- CD085-A - 600 litre Freezer
- CD086-A - 150 litre Glass-Door Refrigerator
- CD087-A - 400 litre Glass-Door Refrigerator
- CD088-A - 600 litre Glass-Door Refrigerator
- CD613-A - 365 litre Freezer
- CD614-A - 600 litre Refrigerator
- CD615-A - 600 litre Freezer
- CD610-A - 150 litre Refrigerator
- CD611-A - 140 litre Freezer
- CD612-A - 400 litre Refrigerator

Introduction

Please take a few moments to carefully read through this manual. Correct maintenance and operation of this machine will provide the best possible performance from your POLAR product.

CD610-A-CD615-A_CD080-A-CD088-A_A5_v10_20201208.indb 3 2020/12/8 15:39

Pack Contents

The following is included:

- POLAR Refrigerator / Freezer
- Shelves - Refrigerator only
  CD610-A/ CD080-A x 3/ CD086 x 3
  CD612-A/ CD082-A x 4 / CD087 x 4
  CD614-A x 4 / CD084-A / CD088 x 4
- Keys x 2
- Spacers x 2
- Instruction Manual

POLAR prides itself on quality and service, ensuring that at the time of packaging the contents are supplied fully functional and free of damage.
Should you find any damage as a result of transit, please contact your POLAR dealer immediately.

Installation

Note: If the unit has not been stored or moved in an upright position, let it stand upright for approximately 12 hours before operation. If in doubt allow to stand.

1. Remove the appliance from the packaging. Make sure that all protective plastic film and coatings are thoroughly removed from all surfaces.
2. Maintain a distance of 20cm (7 inches) between the unit and walls or other objects for ventilation. **NEVER LOCATE NEXT TO OR NEAR A HEAT SOURCE**.

Note: Before using the appliance for the first time, clean the shelves and interior with soapy water.
The appliance is supplied with feet by default. However, castors can be supplied as an option from serial number range: 8128595-AU onwards.

Reversing the door

Depending on the location of the appliance, it may be necessary to change the direction the door opens by changing the side of the door handle.
To reverse the door handle:

1. The door handle is on the left side. Disassemble the right lower hinge.

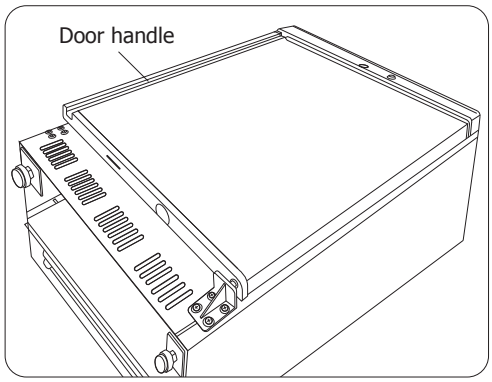

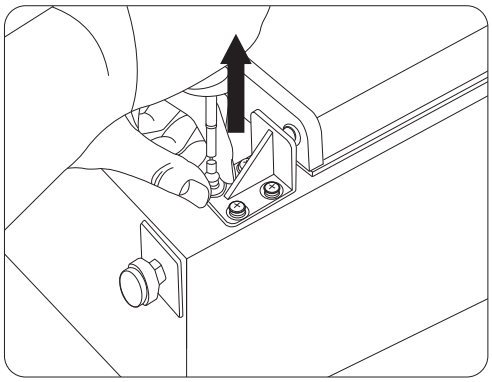

CD610-A-CD615-A_CD080-A-CD088-A_A5_v10_20201208.indb 4 2020/12/8 15:39

2. Remove the door from the right upper hinge. Then remove the hinge sleeve from the door top.

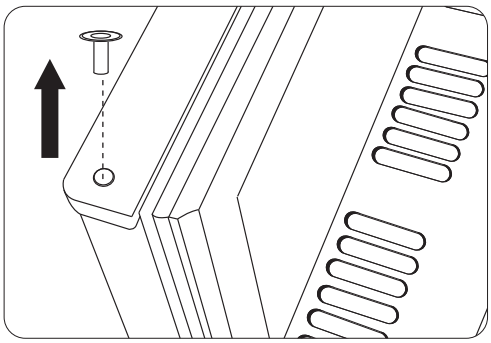

3. Remove the right upper hinge and install it on the left side. Afterwards, install the hinge sleeve onto the hinge.

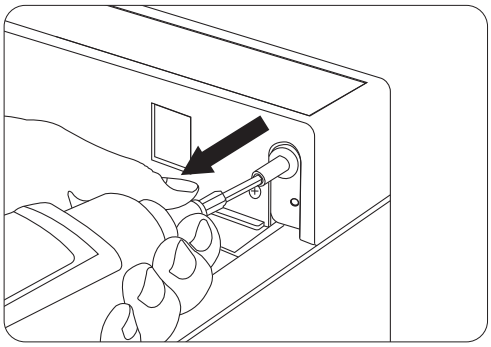

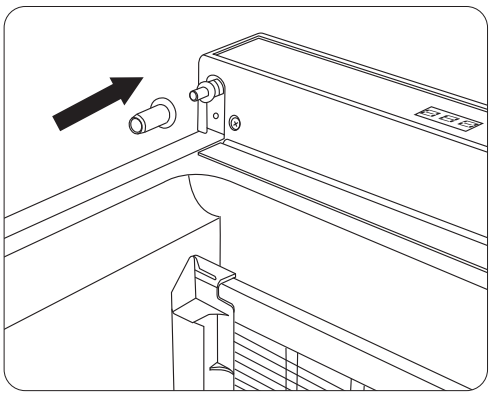

4. Reverse the door and hang it onto the left upper hinge.

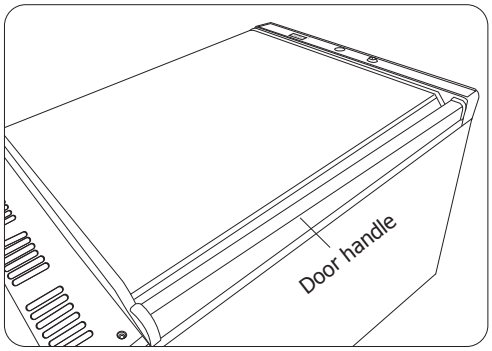

5. Remove the pre-mounted screws on the left lower side.

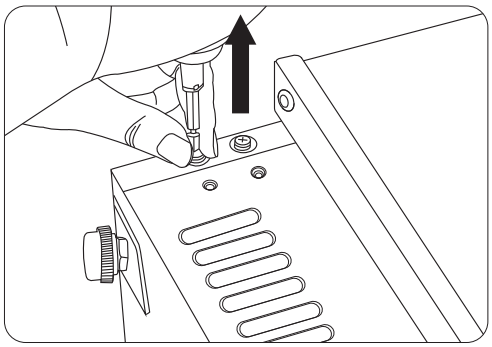

6. Install the previously removed right lower hinge on the left side.

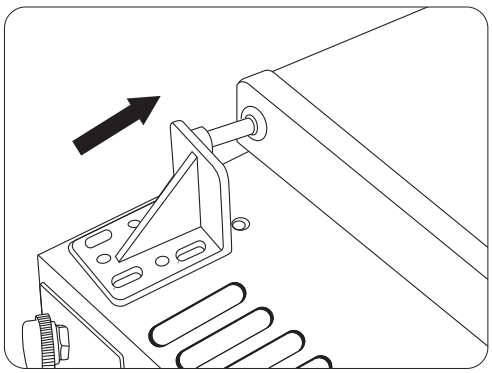

CD610-A-CD615-A_CD080-A-CD088-A_A5_v10_20201208.indb 5 2020/12/8 15:39

7. Secure the hinge in place using the previously removed screws.

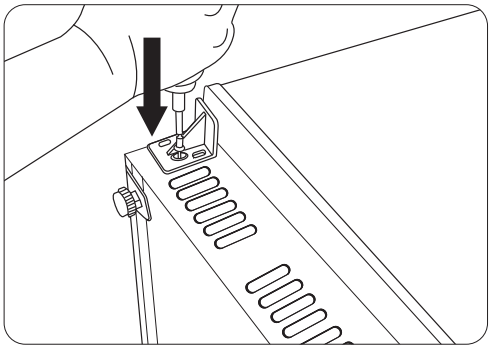

8. Now the door handle is installed on the right side.

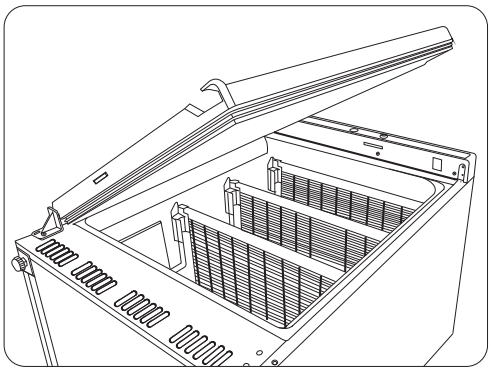

Operation

Control Panel

The control panel is located on the front of the appliance.

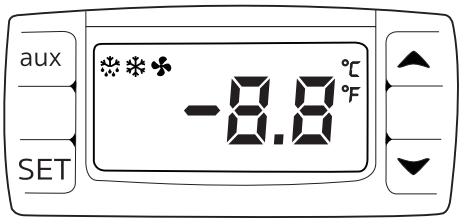

Turn On

1. Close the door of the appliance.
2. Connect the appliance to a mains power supply.

Set the Operating Temperature

1. Press the SET button for 3 seconds. The display will flash.
2. Press the ▲ or ▼ buttons to display the required temperature.
3. Press the **SET** button to store the temperature.

Manual Defrost

Press and hold the defrost button "**aux**" for 2 seconds to begin a manual defrost. The defrost light illuminates.

Storing Food

To get the best results from your POLAR appliance, follow these instructions:

- Only store foodstuffs in the appliance when it has reached the correct operating temperature.
- Do not place uncovered hot food or liquid inside the appliance.
- Wrap or cover food where possible.
- Do not obstruct the fans inside the appliance.
- Avoid opening the doors for prolonged periods of time.

Lock/Unlock the Doors

- A lock is fitted to the doors to ensure foodstuffs are kept secure within your POLAR appliance.
- Use the keys provided to lock/unlock the door.

CD610-A-CD615-A_CD080-A-CD088-A_A5_v10_20201208.indb 6 2020/12/8 15:39

Cleaning, Care & Maintenance



Switch off and disconnect from the power supply before cleaning.

- Clean the interior of the appliance as often as possible.
- Do not use abrasive cleaning agents. These can leave harmful residues.
- Clean the door seal with warm soapy water.
- Always wipe dry after cleaning.
- Do not allow water used in cleaning to run through the drain hole into the evaporation pan.
- Take care when cleaning the rear of the appliance. Sharp edges can cut.
- A POLAR agent or qualified technician must carry out repairs if required.

Cleaning the Condenser

Periodically cleaning the condenser can extend the life of the appliance.
POLAR recommend that a POLAR agent or qualified technician should clean the condenser.

Troubleshooting

If your POLAR appliance develops a fault, please check the following table before making a call to the Helpline or your POLAR dealer.

Fault	Probable Cause	Solution
The appliance is not working	The unit is not switched on	Check the unit is plugged in correctly and switched on
	Plug and lead are damaged	Call POLAR agent or qualified Technician
	Power supply	Check power supply
	Internal wiring fault	Call POLAR agent or qualified Technician
The appliance turns on, but the temperature is too high/low	Too much ice on the evaporator	Defrost the appliance
	Condenser blocked with dust	Call POLAR agent or qualified Technician
	Doors are not shut properly	Check doors are shut and seals are not damaged
	Appliance is located near a heat source or air flow to the condenser is being interrupted	Move the refrigerator to a more suitable location
	Ambient temperature is too high	Increase ventilation or move appliance to a cooler position
	Unsuitable foodstuffs are being stored in the appliance	Remove any excessive hot foodstuffs or blockages to the fan
	Appliance is overloaded	Reduce the amount of food stored in the appliance
The appliance is leaking water	The appliance is not properly levelled	Adjust the screw feet to level the appliance (if applicable)
	The discharge outlet is blocked	Clear the discharge outlet

CD610-A-CD615-A_CD080-A-CD088-A_A5_v10_20201208.indb 7 2020/12/8 15:39

Fault	Probable Cause	Solution
The appliance is leaking water	Movement of water to the drain is obstructed	Clear the floor of the appliance (if applicable)
	The water container is damaged	Call POLAR agent or qualified Technician
The appliance is unusually loud	Loose nut/screw	Check and tighten all nuts and screws
	The appliance has not been installed in a level or stable position	Check installation position and change if necessary
The lamp does not illuminate	Lamp needing replacing	Call POLAR agent or qualified Technician

Technical Specifications

Model	Voltage	Power	Current	Temperature Range	Capacity (litres)	Refrigerant	Dimensions H x W x D mm	Weight (kg)
CD610-A CD080-A	220-240V 50Hz	150	1.0A	2°C to 8°C	150	R600a (35g)	850 x 600 x 600	44
CD611-A CD081-A	220-240V 50Hz	150	1.0A	-10°C to -25°C	140	R600a (60g)	850 x 600 x 600	44.5
CD612-A CD082-A	220-240V 50Hz	185	1.5A	2°C to 8°C	400	R600a (75g)	1850 x 600 x 600	69
CD613-A CD083-A	220-240V 50Hz	210	2A	-10°C to -25°C	365	R600a (90g)	1850 x 600 x 600	71
CD614-A CD084-A	220-240V 50Hz	185	1.5A	2°C to 8°C	600	R600a (100g)	1890 x 777 x 695	90
CD615-A CD085-A	220-240V 50Hz	350	3.5A	-10°C to -25°C	600	R600a (150g)	1890 x 777 x 695	94
CD086-A	220-240V 50Hz	150	1.0A	2°C to 8°C	150	R600a (35g)	850 x 600 x 600	47
CD087-A	220-240V 50Hz	185	1.5A	2°C to 8°C	400	R600a (90g)	1850 x 600 x 600	72
CD088-A	220-240V 50Hz	185	1.5A	2°C to 8°C	600	R600a (110g)	1890 x 777 x 695	93

CD610-A-CD615-A_CD080-A-CD088-A_A5_v10_20201208.indb 8 2020/12/8 15:39

Electrical Wiring

The plug is to be connected to a suitable mains socket.

POLAR appliances are wired as follows:

- Live wire (coloured brown) to terminal marked L
- Neutral wire (coloured blue) to terminal marked N
- Earth wire (coloured green/yellow) to terminal marked E

This appliance must be earthed.



If in doubt consult a qualified electrician.

Electrical isolation points must be kept clear of any obstructions. In the event of any emergency disconnection being required they must be readily accessible.

Compliance

The WEEE logo on this product or its documentation indicates that the product must not be disposed of as household waste. To help prevent possible harm to human health and/or the environment, the product must be disposed of in an approved and environmentally safe recycling process. For further information on how to dispose of this product correctly, contact the product supplier, or the local authority responsible for waste disposal in your area.

POLAR parts have undergone strict product testing in order to comply with regulatory standards and specifications set by international, independent, and federal authorities.

POLAR products have been approved to carry the following symbol:



All rights reserved. No part of these instructions may be produced or transmitted in any form or by any means, electronic, mechanical, photocopying, recording or otherwise, without the prior written permission of POLAR.

Every effort is made to ensure all details are correct at the time of going to press, however, POLAR reserve the right to change specifications without notice.

CD610-A-CD615-A_CD080-A-CD088-A_A5_v10_20201208.indb 9 2020/12/8 15:39

DECLARATION OF CONFORMITY

• Conformiteitsverklaring • Déclaration de conformité • Konformitätserklärung • Dichiarazione di conformità • • Declaración de conformidad • Declaração de conformidade

Equipment Type • Uitrustingstype • Type d'équipement • Gerätetyp • Tipo di apparecchiatura • Tipo de equipo • Tipo de equipamento		**Model** • Modèle • Modell • Modello • Modelo • Malli	
1. Glass Door Display Freezer - 400Ltr	**10.** Upright Fridge - 600Ltr	**1.** CB921 (& -E)	**10.** CD614 (& -E -A)
2. St/St Undercounter Fridge 150Ltr	**11.** 400Ltr St/St Fridge	**2.** CD080 (& -E -A)	**11.** CD082 (& -E -A)
3. St/St Freezer - 365Ltr	**12.** 600Ltr St/St Freezer	**3.** CD083 (& -E -A)	**12.** CD085 (& -E -A)
4. 600Ltr St/St Fridge	**13.** Glass Door Fridge - 150Ltr	**4.** CD084 (& -E -A)	**13.** CD086 (& -E -A)
5. Glass Door Fridge - 600Ltr	**14.** Glass Door Fridge - 400Ltr	**5.** CD088 (& -E -A)	**14.** CD087 (& -E -A)
6. Undercounter Fridge - 150Ltr	**15.** St/St Undercounter Freezer 140Ltr	**6.** CD610 (& -E -A)	**15.** CD081 (& -E -A)
7. Undercounter Freezer - 140Ltr	**16.** Upright Fridge - 400Ltr	**7.** CD611 (& -E -A)	**16.** CD612 (& -E -A)
8. Upright Freezer - 600Ltr	**17.** G-Series Patisserie Refrigerator - White	**8.** CD615 (& -E -A)	**17.** GL185 (& -E -A)
9. Upright Freezer - 365Ltr		**9.** CD613 (& -E -A)	

Application of Territory Legislation & Council Directives(s) Toepassing van Europese Richtlijn(en) • Application de la/des directive(s) du Conseil • Anwendbare EU-Richtlinie(n) • Applicazione delle Direttive • Aplicación de la(s) directiva(s) del consejo • Aplicação de directiva(s) do Conselho	**Machinery Directive 2006/42/EC** EN 60335-1:2012 +A11:2014 +A13:2017 EN 60335-2-89:2010 +A1:2016 +A2:2017 EN 62233:2008 **Electro-Magnetic Compatibility (EMC) Directive 2014/30/EU - recast of 2004/108/EC** EN 55014-1:2017 EN 55014-2:2015 EN 61000-3-2: 2014 EN 61000-3-3: 2013 **Restriction of Hazardous Substances Directive (RoHS) 2015/863 amending Annex II to Directive 2011/65/EU**	**Electrical Safety** AS/NZS 60335.1:2011 +A1:2012 +A2:2014 +A3:2015 +A4:2017 AS/NZS 60335.2.89:2010 +A1:2013 +A2:2016 **Electromagnetic Compatibility** EN 55014-1:2017 EN 55014-2:2015 EN 61000-3-2: 2014 EN 61000-3-3: 2013
Producer Name • Naam fabrikant • Nom du producteur • Name des Herstellers • Nome del produttore • Nombre del fabricante • Nome do fabricante		**Polar**

I, the undersigned, hereby declare that the equipment specified above conforms to the above Territory Legislation, Directive(s) and Standard(s).

Ik, de ondergetekende, verklaar hierbij dat de hierboven gespecificeerde uitrusting goedgekeurd is volgens de bovenstaande Richtlijn(en) en Standaard(en).

Je soussigné, confirme la conformité de l'équipement cité dans la présente à la / aux Directive(s) et Norme(s) ci-dessus

Ich, der/die Unterzeichnende, erkläre hiermit, dass das oben angegebene Gerät der/den oben angeführten Richtlinie(n) und Norm(en) entspricht.

Il sottoscritto dichiara che l'apparecchiatura di sopra specificata è conforme alle Direttive e agli Standard sopra riportati.

El abajo firmante declara por la presente que el equipo arriba especificado está en conformidad con la(s) directiva(s) y estándar(es) arriba mencionadas.

Eu, o abaixo-assinado, declaro que o equipamento anteriormente especificado está em conformidade com a(s) anterior(es) Directiva(s) e Norma(s)

Date • Data • Date • Datum • Data • Fecha • Data	**3rd December 2020**		
Signature • Handtekening • Signature • Unterschrift Firma • Firma • Assinatura	DocuSigned by: Ashley Hooper B39382C9FD9C478...	DocuSigned by: Eoghan Donnellan D352874F7FAB460...	DocuSigned by: Josie Holt 3582E210C4054DA...
Full Name • Volledige naam • Nom et prénom • Vollständiger Name • Nome completo • Nombre completo • Nome por extenso	**Ashley Hooper**	**Eoghan Donnellan**	**Josie Holt**
Position • Functie • Fonction • Position • Qualifica • Posición • Função	**Technical & Quality Manager**	**Commercial Manager/ Importer**	**Commercial Manager/ Responsible Supplier**
Producer Address • Adres fabrikant • Adresse du producteur • Anschrift des Herstellers • Indirizzo del produttore • Dirección del fabricante • Morada do fabricante	**Fourth Way, Avonmouth, Bristol, BS11 8TB United Kingdom**	**42 North Point Business Park New Mallow Road Cork Ireland**	**15 Bagdally Road, Campbelltown NSW 2560**

POLAR

http://www.polar-refrigerator.com/

CD610-A-CD615-A_CD080-A-CD088-A_A5_v10_20201208

CD610-A-CD615-A_CD080-A-CD088-A_A5_v10_20201208.indb 12 2020/12/8 15:39