

MULTI-DECK MERCHANDISER

INSTALLATION & OPERATIONS MANUAL

PFH/DELI

Table of Contents

Energy Data & Case Dimensions 2-3
General Information 4
Installation 5-6
Case Connections 7
Lighting, Heat and Power Supplies 8-9
Pre-Power Checklist 10
Heat Controls & Settings 11-13
Case Cleaning 14
Parts Ordering 15
Appendices

To ensure proper functionality and optimum performance, it is STRONGLY recommended that Hillphoenix specialty cases be installed/serviced by qualified technicians who have experience working with commercial refrigerated display merchandisers and storage cabinets. For a list of Hillphoenix-authorized installation/service contractors, please visit our website at www.hillphoenix.com.

Intertek Intertek

Hillphoenix®
A DOVER™ COMPANY

09/18

Hillphoenix®

A DOVER™ COMPANY

LIABILITY NOTICE

For Cases with Shelf Lighting Systems

Hillphoenix does NOT design any of its shelf lighting systems or any of its display cases with shelf lighting systems for direct or indirect exposure to water or other liquids. The use of a misting system or water hose on a display case with a shelf lighting system, resulting in the direct or indirect exposure of the lighting system to water, can lead to a number of serious issues (including, without limitation, electrical failures, fire, electric shock, and mold) in turn resulting in personal injury, death, sickness, and/or serious property damage (including, without limitation, to the display itself, to the location where the display is situated [e.g., store] and to any surrounding property). DO NOT use misting systems, water hoses or other devices that spray liquids in Hillphoenix display cases with lighted shelves.

If a misting system or water hose is installed or used on a display case with a shelf lighting system, then Hillphoenix shall not be subject to any obligations or liabilities (whether arising out of breach of contract, warranty, tort [including negligence], strict liability or other theories of law) directly or indirectly resulting from, arising out of or related to such installation or use, including, without limitation, any personal injury, death or property damage resulting from an electrical failure, fire, electric shock, or mold.

P079211M, REVO

Important

At Hillphoenix®, the safety of our customers and employees, as well as the ongoing performance of our products, are top priorities. To that end, we include important warning messages in all Hillphoenix installation and operations handbooks, accompanied by an alert symbol paired with the word "DANGER", "WARNING", or "CAUTION".

All warning messages will inform you of the potential hazard; how to reduce the risk of case damage, personal injury or death; and what may happen if the instructions are not properly followed.

⚠ DANGER

Indicates an immediate threat of death or serious injury if all instructions are not followed carefully.

⚠ WARNING

Indicates a potential threat of death or serious injury if all instructions are not followed carefully.

⚠ CAUTION

Indicates that failure to properly follow instructions may result in case damage.

Revision History

- new manual format_02/15
- heat control and settings_11/15
- troubleshooting guide_12/15
- warranty_04/16
- energy data_02/17
- endview & diagram updates_03/18
- electrical hookups, wiring diagrams, parts list and incandescent removal_09/18

ENERGY DATA

PF HOT

Self-Service

Model		Top Heaters		Bottom Heaters		Lights		First Top Shelf		Second Top Shelf		Third Top Shelf	
		Qnty	Watts (each)	Qnty	Watts (each)	Qnty	Watts (each)	Qnty	Watts (each)	Qnty	Watts (each)	Qnty	Watts (each)
PFH	4’	2	295	2	600	---[1]	---	1	590	1	816	1	806
	6’	2	515	3	600	---	---	2	515	2	598	2	598
	8’	4	295	4	600	---	---	2	590	2	816	2	816

Self-Service Continued

Model		(51”) Total Amps (208-3-60)			(54”) Total Amps (208-3-60)		
		L1	L2	L3	L1	L2	L3
PFH	4’	11.42	10.19	9.68	12.25	12.5	12.51
	6’	16.1	18.53	14.34	12.21	20.41	19.34
	8’	21.0	20.93	20.52	24.92	28.77	24.12

Electrical Data

Model		Fans per Case	Control Fans 208 Volts	
			Amps	Watts
PFH	4’	1	0.06	14
	6’	1	0.06	14
	8’	2	0.12	28

Lighting Data

Model		Lights per Row	Light Length (ft)	Fluorescent Lighting (Per Light Row)	
				Amps	Watts
PFH	4’	1	3	0.09	18.72
	6’	2	2	0.12	24.99
	8’	2	3	0.18	37.44

1 NOTE: “- - -” indicates data not applicable.

Engineered for stores with ambient conditions not to exceed 75º and 55% relative humidity.
Due to engineering improvements specifications may change without notice.
All measurements are taken per ARI 1200 - 2002 specifications.
Numbers are based on standard case sizes. Consult engineering.

PF HOT

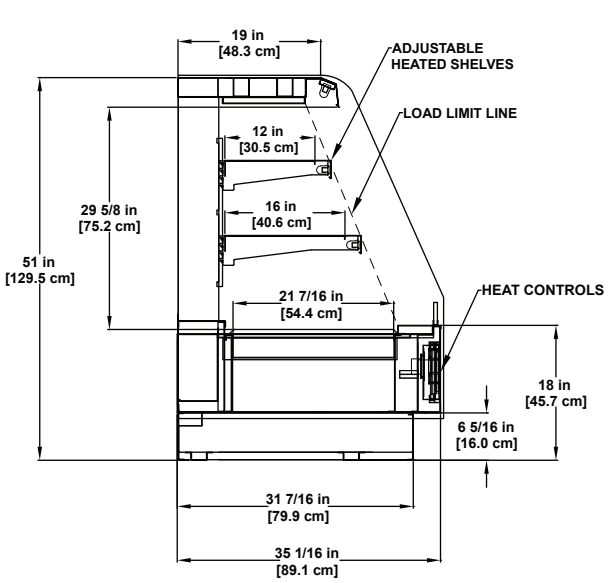

51" PROFILE

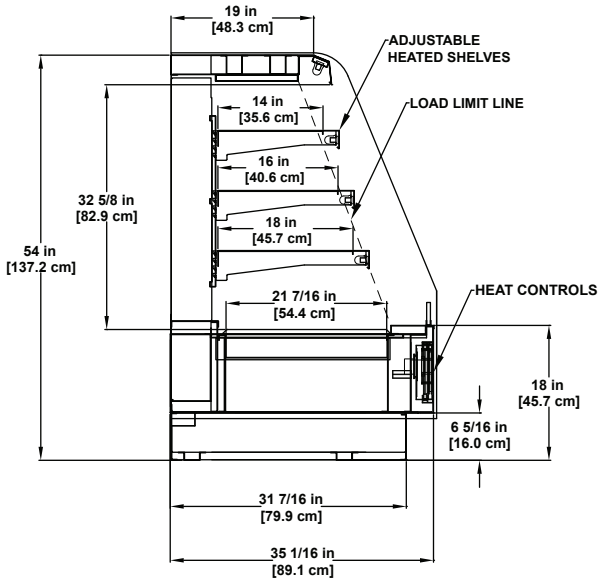

54" PROFILE

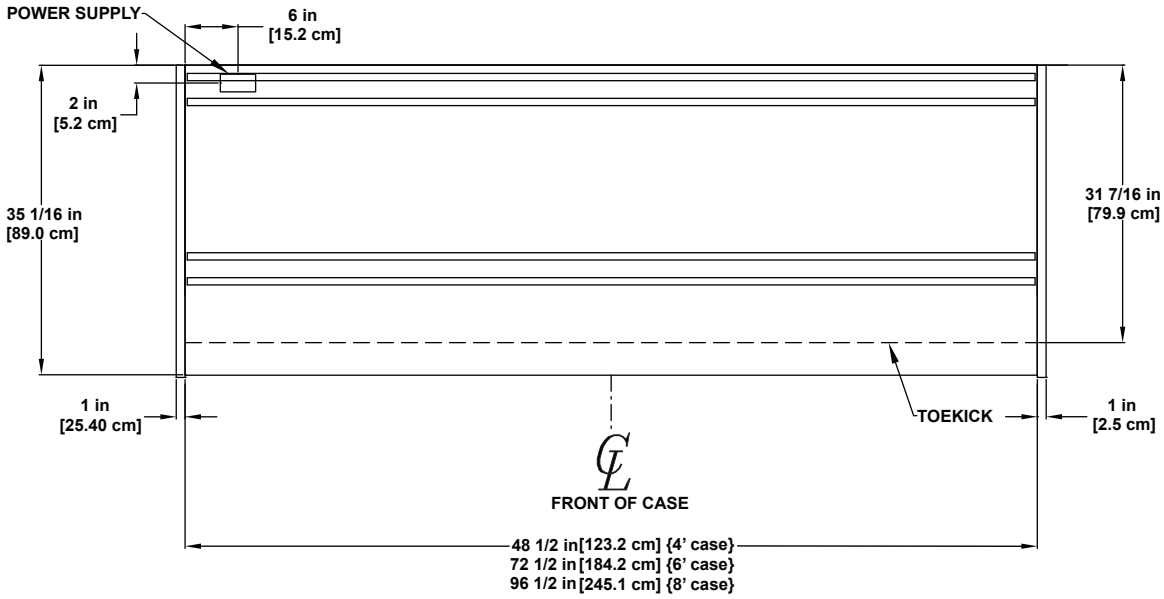

GENERAL INFORMATION

Thank you for choosing Hillphoenix for your food merchandising needs. This handbook contains important technical information and will assist you with the installation and operation of your new Hillphoenix specialty cases. By closely following the instructions, you can expect peak performance; attractive fit and finish; and long case life.

We are always interested in your suggestions for improvements (e.g. case design, technical documents, etc.). Please feel free to contact our Marketing Services group at the number listed below. Thank you for choosing Hillphoenix, and we wish you the very best in outstanding food merchandising.

CASE DESCRIPTION

This manual specifically covers the PFH deli application self-service open multi-deck merchandiser.

STORE CONDITIONS

Hillphoenix cases are designed to operate in an air-conditioned store that maintains a 75°F (24°C) store temperature and 55% (max) relative humidity (ASHRAE conditions). Case operation will be adversely affected by exposure to excessively high ambient temperatures and/or humidity.

SHIPPING CASES

Transportation companies assume all liability from the time a shipment is received by them until the time it is delivered to the consumer. Our liability ceases at the time of shipment.

RECEIVING CASES

Examine fixtures carefully and in the event of shipping damage and/or shortages, please contact the Service Parts Department at the number listed below.

CASE DAMAGE

Claims for obvious damage must be 1) noted on either the freight bill or the express receipt and 2) signed by the carrier's agent; otherwise, the carrier may refuse the claim. If damage becomes apparent after the equipment is unpacked, retain all packing materials and submit a written request to the carrier for inspection within 14 days of receipt of the equipment. **Failure to follow this procedure will result in refusal by the carrier to honor any claims with a consequent loss to the consumer.**

If a UPS shipment has been damaged, retain the damaged material, the carton and notify us at once. We will file a claim.

LOST/MISSING ITEMS

Equipment has been carefully inspected to insure the highest level of quality. Any claim for lost/missing items must be made to Hillphoenix within 48 hours of receipt of the equipment. When making a claim please use the number listed below.

SERVICE & TECHNICAL SUPPORT

For service or technical questions regarding specialty cases, please contact our Specialty Products Division Service Department at 1-319-293-3777. For questions regarding our refrigeration systems or electrical distribution centers, please contact our Systems Division Customer Service Department at 1-770-388-0706.

CONTACTING THE FACTORY

If you need to contact Hillphoenix regarding a specific fixture, be certain that you have both the case model number and serial number (this information can be found on the data tag, located on the top-left interior of the case). When you have this information, call the number below and ask for a Service Parts Representative.

Hillphoenix Specialty Products
703 Franklin Street, PO Box 478
Keosauqua, IA 52565
Tel: (319) 293-3777/Fax: (319) 293-3776
Website: www.hillphoenix.com

LOCATION

This hot display case has been designed for displaying and storing perishable food product. It is engineered for air-conditioned stores with a maximum ambient of 75°F and 55% relative humidity.

When selecting the location for placement of this case, avoid the following conditions:

Excessive Air Movement

1. Doors
2. Air-conditioned vents
3. Other air sources

FLOOR PREP

1. Ask the general contractor if your current copy of the building dimensions are the most recently issued. Also, ask for the points of reference from which you should take dimensions to locate the cases.
2. Using chalk lines or a laser transit, mark the floor where the cases are to be located for the entire lineup. The lines should coincide with the outside edges of the case feet.
3. Move case as close as possible to its permanent location. Remove all crating and shipping braces above the shipping pallet. Loosen the plastic dust cover from the pallet, but leave cover over the case to protect it while removing the case from the pallet. Carefully, lift case up and off the pallet. Remove dust cover. Installation hardware ships in a marked packet located inside the case.
4. Locate horizontal support positions along the chalk line (Fig. 1). Spot properly leveled shim packs at each support location.

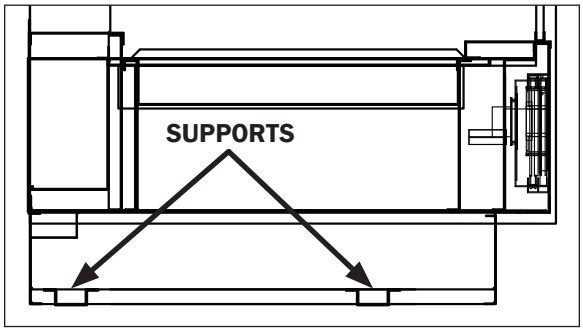

Fig. 1 Horizontal supports

⚠ CAUTION

Locate the horizontal supports under unit before removing from pallet. Failure to do so will damage the finished metal if correct lift points are not identified prior to removal.

⚠ CAUTION

These cases are not designed for excessive external weight. Do not walk on top or inside of cases. Doing so may result in case damage and/or personal injury.

LINE-UP & INSTALLATION

Single Case

1. Move the case into position. Using a “J” bar, raise the end of the case (under cross support), and lower the horizontal support on to the shim packs. Repeat on the other end of the case.

⚠ WARNING

Be certain that your hands and feet are out of the way before lowering the case. Failure to do so may result in serious injury.

2. Once the case is properly placed on the shim packs, check the horizontal level of the case by placing a bubble level on the front sill. Add/remove shim packs as needed.
3. Install the bumper, if applicable, into pre-attached bumper track and snap into place.
4. After sufficient time has passed to allow for bumper shrinkage, cut away the excess bumper for final fit and finish. Be certain to use an appropriate cutting tool (tubing- or PVC-cutter) to ensure a smooth cut.
5. Install case shelves and reconnect lights with the white power cord(s) and the heat with the black power cord(s). Color matching white/black receptacles can be found at opposite ends of the inside back of the case. Be aware that differing shelf configurations will affect energy consumption and case performance.
6. Install toekick back onto the base of case.

Multi-Case

1. Remove any shelves (discard the shelf clips) and/or loose items from the cases that may interfere with case joining. Keep all loose items as they will be used later in the installation process.
2. Follow the single-case installation instructions for the first case, excluding #6, then position the next case in the lineup approximately 3’ away.
3. Apply the foam tape (supplied) to the end breakers of the first case. After this is set apply the sealant to the end of the case. From the opposite end, push the second case to a position that is approximately 6" from the first case, then position case on the shim packs.

4. Push the cases tightly together, then lightly bolt them together through the holes provided (Fig. 2). Tighten all the joining bolts until all margins are equal. Be careful not to over tighten.

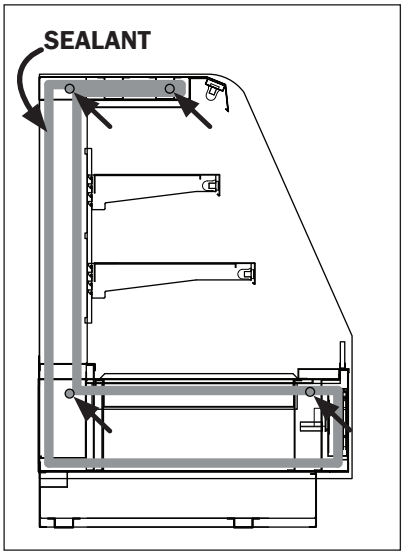

Fig. 2 Sealant and bolt locations

5. Repeat steps 3 and 4 of this sequence for all remaining cases. Be certain to properly level all cases.
6. Properly align the front panels as needed, then install, if applicable, front panel trim (supplied).
7. Install the bumper into pre-attached bumper track and snap into place.
8. After sufficient time has passed to allow for bumper shrinkage, cut away the excess bumper for final fit and finish. Be certain to use an appropriate cutting tool (tubing- or PVC-cutter) to ensure a smooth cut.
9. Install case shelves and reconnect lights. Be aware that differing shelf configurations will affect energy consumption and case performance.
10. Install toekick back onto the base of case.

⚠ CAUTION

Installation of 3rd-party materials may result in diminished case performance.

ELECTRICAL

Electrical hookups are made through the power supply box that can be accessed by removing the front (or rear) toekick panel. **Note: The location of the power supply box corresponds with the location of the heat controls.**

For case-to-case wiring, run conduit between the power supply boxes or run wiring through the raceway. When connecting to the power supply on the case, field wiring should exit box from the side furthest away from case wiring to allow more room inside for wiring connections. Always check the data tag located on left end exterior panel or top interior of the case. The case must be grounded. *For more detailed electrical wiring information (see Appendix A1).*

⚠ CAUTION

Be certain that all electrical connections are compliant with local codes.

MECHANICAL ACCESS LOCATIONS

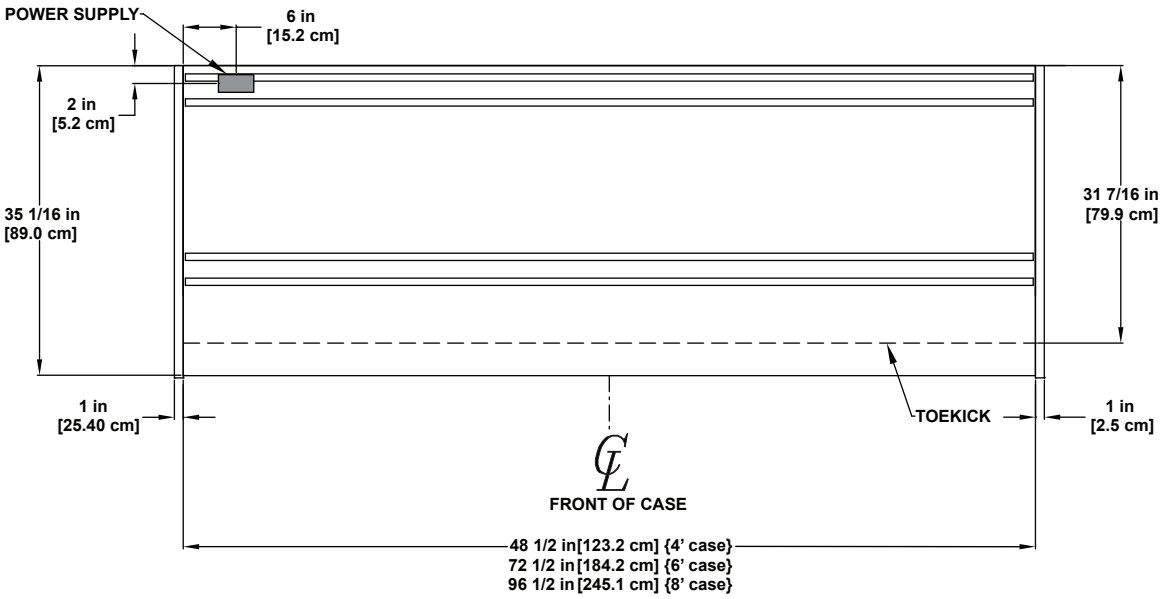

GENERAL LIGHTING INFORMATION

Hillphoenix hot cases are equipped with T-8 lights and feature specially designed light reflectors in the cornice to improve the illumination of products. The T-8 electronic ballasts operate both the cornice and shelf lights, and are located above the cornice reflectors.

The lighting system has an ON/OFF switch located in the raceway, power box or at the inside back of the case. Once a case has been properly positioned in the store and an electrician has connected the lighting circuit, the lights may be turned on to verify that they are connected and functioning properly.

To ensure peak performance, it is advisable to run the lighting systems only when the store climate control is on and the case heat is started. **Note: It is highly recommended that the ambient store temperature not exceed 80°F**

⚠ DANGER

SHOCK HAZARD

Always disconnect power to case when cleaning, servicing or configuring components of the lighting system. Failure to do so may result in serious injury or death.

⚠ WARNING

Using improper DC power supplies may damage the luminaires, resulting in sub-standard operation and increased chances of safety issues/ injury.

SHELF LUMINAIRES

1. Unplug the white T-8 lamp power cords located at the inside-back of the case below the lamp being replaced (Fig. 3).
2. Carefully separate the cap from the lamp holder on both ends of the T-8 lamp (Fig. 4). Simultaneously pull down at both ends of the old T-8 lamp to remove.
3. Push and snap the new T-8 lamp into place on the lamp holder. When the T-8 is properly seated, the lamp button - which secures the T-8 to the lamp holder - will be clearly visible through the lamp button hole. The cap should be pushed all the way down (Fig. 5) for positive engagement indicator.

HEATED SHELVES

Unlike the shelf luminaries that are designated with a white receptacle and cord; the heat receptacle and cord designation is black (Fig. 6). The two, light and heat cords, are located at opposite ends of the same shelf and the color designated white/ black receptacles to match at their corresponding end of the inside back of the case.

In order to supply heat to the shelves this black heat cord must be plugged in to it's designated receptacle during use at all times.



Fig. 3 T-8 light power cord (WHITE)

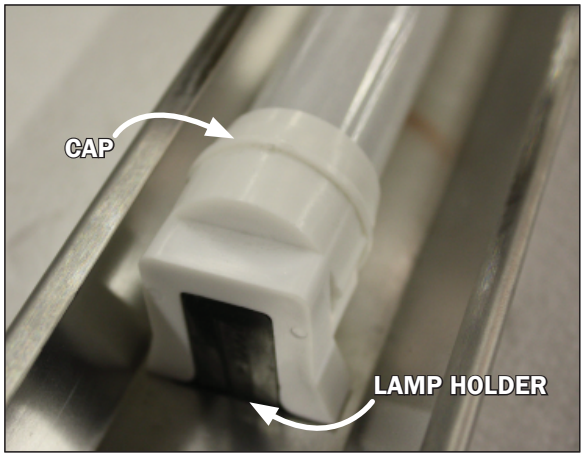

Fig. 4 T-8 cap and lamp holder

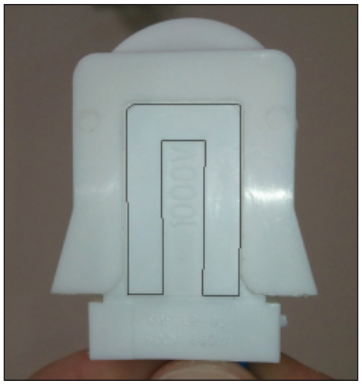

Fig. 5 Positive engagement



Fig. 6 Heat power cord (BLACK)

BALLAST/POWER SUPPLY ACCESS

To gain access to the ballasts or power supplies remove the panel located above the rear toe kick (Fig. 7).

⚠ DANGER

SHOCK HAZARD

Always disconnect power to case when cleaning, servicing or configuring components of the lighting system. Failure to do so may result in serious injury or death.

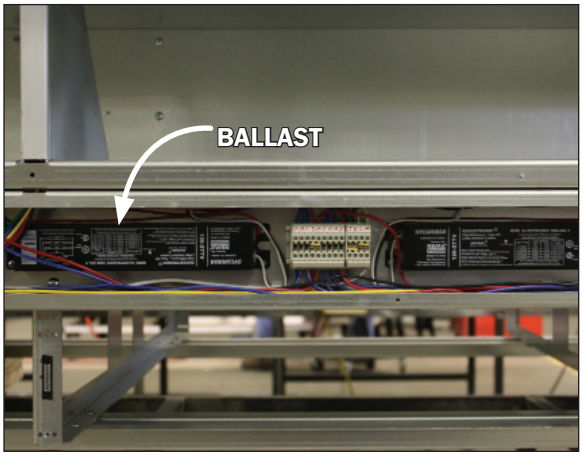

Fig. 7 Clear view of the ballasts

SHELF LUMINAIRES

Removing shelf luminaires:

1. Unplug the luminaire.
2. Pinching the latching clips inward at the ends of the luminaire, rotate luminaire up at each end until hooks are free, then remove.

Re-installing shelf luminaires:

1. Place hook into shelf roll form at shelf front and rotate rear of luminaire toward the shelf.
2. Depress the rear clip so that luminaire can finish rotation and until clip engages the shelf bracket.

NON-SHELF LUMINAIRES

Removing non-shelf luminaires:

1. Simultaneously squeeze the plastic clips at each end.
2. When the hooks are disengaged, pull the luminaire free.

Re-installing non-shelf luminaires:

1. Align the 4-pole jack with the 4-pole connector on the clip-in luminaire.
2. Push into place - side clips will engage on the sheet metal of the case.
3. Fasten anti-tamper bracket into sheet metal of case with #8 screw at end opposite of the 4-pole in-line connector.

PRE-POWER CHECKLIST

Before powering-up the case, be certain that all of the steps listed below have been completed to ensure proper case functionality, safety and compliance with warranty terms.

- ☐ **Have you thoroughly examined the case for shipping damage? (see pg. 4)**
- ☐ **Have you checked the horizontal level of the case? (see pg. 5)**
- ☐ **Have you applied the sealant to the end breakers of adjoining cases? (see pg. 6)**
- ☐ **Have you sealed the case-to-case joints by applying caulk and acrylic tape to the end frame seam? (see pg. 6)**
- ☐ **Have you installed the toekick? (see pg. 6)**

After powering-up the case, be certain that all of the steps listed below have been completed to ensure proper case functionality, safety and compliance with warranty terms.

1. **Check all lights and heating elements to ensure they are all functioning properly.**
2. **Check case temperature and adjust controller as needed.**

HEAT CONTROLS

Hillphoenix case hot wells are equipped with digital controls (Fig. 8). To adjust press the appropriate arrow firmly. There is one control per well for individual functions.

The controls are normally grouped in clusters. Each case will have Control #1 and one or more Control #2.

PREHEATING

Turn on power switch and set controls to level 9 for preheating. Place empty pans or tiles in all wells. Let unit operate with empty pans or tiles for 60 minutes before loading with product. Adjust controls to desired levels before loading case with product. Putting hot food in a case this has not reached full temperature will cause product temperature to drop quickly. All product must be preheated to 175ºF. It is essential that product be fully cooked and heated prior to stocking the case, and that it meets in accordance to FDA Food Code for food safety. Check product temperature of larger pieces when cooking different size items. It takes longer for larger pieces to reach desired temperature.



Fig. 8 Digital heat controls

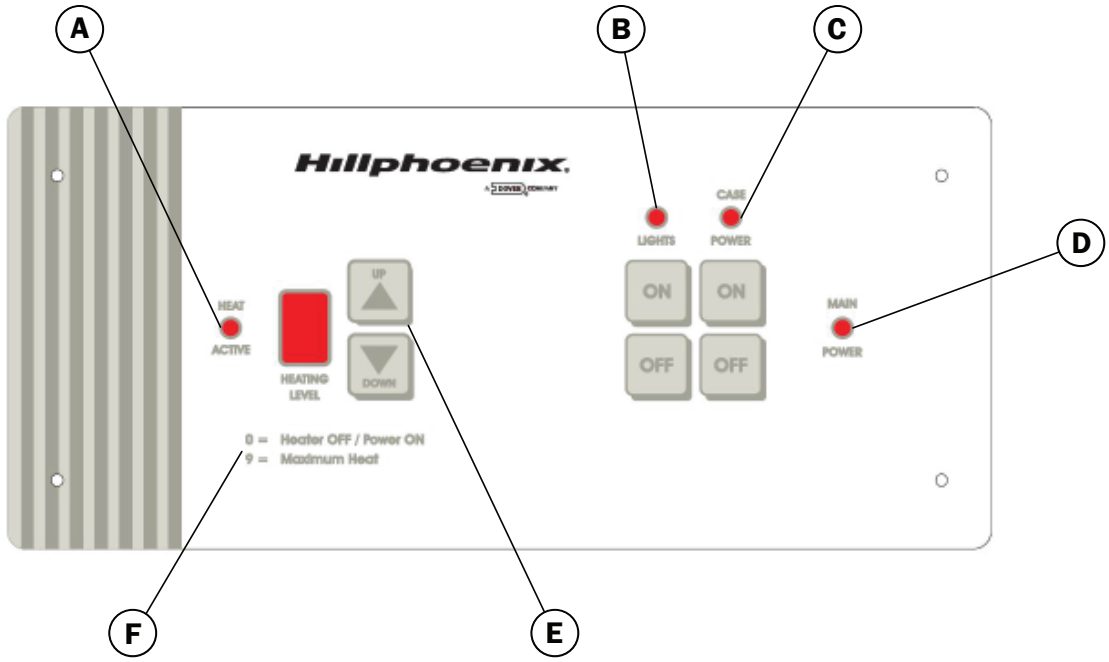

A **Heat Active - The heating element turns ON and OFF, once every second. The heat active dot blinks ON/OFF each time the element is switched ON/OFF. If the dot is not blinking verify that there is power to the case and that the heating element is running properly.**

B **Lights - The top light is for illumination only. It is not for control of the upper heat.**

C **Case Power - Turn power ON/OFF at the switch. Press buttons firmly to ensure proper ON/OFF.**

D **Main Power - When controls are OFF the main power light should remain lit.**

E **Heating Levels - Adjust levels UP or DOWN.**

F **Heating Levels (Range)** **0 = OFF**
1 = Lowest
9 = Highest

Control #1

This is the largest control. Once settings are determined, use this control to turn power ON and OFF for the case. Reset when ambient conditions change or product changes.

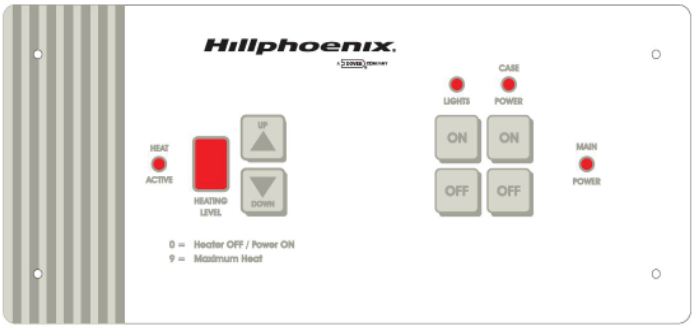

Functions: **Case Power ON/OFF**
Lights ON/OFF
Top Fan ON/OFF
Overhead Heat

Range: **(0-9)**
0 = OFF
1 = Lowest Setting
9 = Highest Setting

Control #2

At least one and possibly several of these controls will be on each case depending on the number of wells. There will always be one control per well.



Functions: **Well Control**

Range: **(0-9)**
0 = OFF
1 = Lowest Setting
9 = Highest Setting

PRODUCT DISPLAY & SETTINGS

This merchandiser is designed to operate without water in the well. Adding water will cause the case to expend many BTU's in order to heat the water and not the product. This may cause condensation to collect on the font glass (if applicable) of service cases.

For best results product should be arranged by product type with groupings of like product together.

Load Limits

1. Product must be 6" below the top heater in self-service cases and contained in the tile or well area.
2. The well must be completely covered with tiles or pans whether filled with product or empty.

⚠ WARNING

All product must be fully cooked prior to being stocked in the case. Failure to do so may result in serious illness or death.

⚠ WARNING

Always keep product within the designated heated areas. Failure to do so may result in case malfunction and product losing proper temperature, resulting in sub-standard operation and increased chances of food contamination.

Common Settings

Product that is immersed in liquid is easier to keep hot. Products like fried foods are the hardest to maintain temperature.

To adjust temperatures, change the heat setting one number at a time by holding the UP or DOWN button 2-3 seconds to ensure change made. Allow 1-2 hours for the case temperature to even out before continuing. The settings will need to be adjusted to your specific product and store conditions. Use these settings as a starting point.

Once the correct setting is found, the controls may be left at that setting, and turned ON and OFF using the power switch on the main control. The case must be turned on 1 hour before placing the product. Be sure that all wells are covered with pans or tiles all times whether filled with product or empty.

Recommended: **5-6 = Overhead Controls**
5-6 = Fried Foods
2-5 = Immersed Foods

CASE AIR TEMPERATURE

The case air temperature may not be as high as the desired

product temperature. This case is designed to produce long wave radiant heat. This type of heat penetrates the food and keeps it warm from the inside out. Therefore, the air temperature may not be the same as the product temperature. Measure product interior temperature to determine the correct settings, not the air temperature for the best results.

UNIT SHUTDOWN

Turn case power to OFF on Control #1. It is not necessary to adjust well or overhead heat controls. Remove product, turn off case lights and allow the case to cool completely before cleaning.

CASE CLEANING

A periodic cleaning schedule should be established to maintain proper sanitation, insure maximum operating efficiency, and avoid the corrosive action of food fluids on metal parts that are left on for long periods of time. We recommend that all heated surfaces be kept clear of excess food daily and a complete cleaning take place once a week. Further suggestions for case cleaning include the following:

- To avoid shock hazard, be sure all electrical power is turned off before cleaning. In some installations, more than one disconnect switch may have to be turned off to completely de-energize the case.
- Allow cases to be turned off long enough to cool before starting the cleaning process.
- Clean from top to bottom when cleaning the display case to avoid cross contamination.
- If any potentially harmful cleaners are used, be certain to provide a temporary separator (e.g., cardboard, plastic wrap, etc.) between those cases that are being cleaned and those that may still contain product.
- Avoid spraying any cleaning liquids directly on the electrical connections, steam cleaning or using excessive amounts of water.
- If the case is equipped with doors be sure to leave them open until the case is completely dry.
- Remove toekick and clean underneath the case with a broom and a long-handled mop. Use warm water and a disinfecting cleaning solution when cleaning underneath the cases.

⚠ DANGER

SHOCK HAZARD

Always disconnect power to case when servicing or cleaning. Failure to do so may result in serious injury or death.

⚠ WARNING

Always let the case cool before cleaning. Failure to do so may result in sub-standard operation and increased chances of safety issues/injury.

Heat Control Doors

1. Remove the sliding doors on the front of the case and clean. To remove: push up and pull out (Fig. 9).
2. Use a spray bottle filled with an approved mild detergent and warm water.
3. Use a clean, disposable cloth (approved item) to thoroughly clean all areas of the case.
4. Wipe down doors with a clean, disposable cloth (approved item)
5. Place the cleaned doors on a clean sanitized surface until they are dry.



Fig. 9 Front heat control door removal

Contact the Service Parts Department at:

319-293-3777

Provide the following information about the part you are ordering:

- **Model number and serial number* of the case for which the part is intended.**
- **Length of the part (if applicable).**
- **Color of part (if painted) or color of polymer part.**
- **Whether part is for left- or right-hand application.**
- **Quantity**

***Data tag is located on the left end exterior panel or top interior of the case.**

If the parts are to be returned for credit, contact the Parts Department. Do not send parts without authorization.

APPENDIX

A1 ..... Wiring Information

B1 ..... Parts List

A1: WIRING DIAGRAM

B1: PARTS LIST

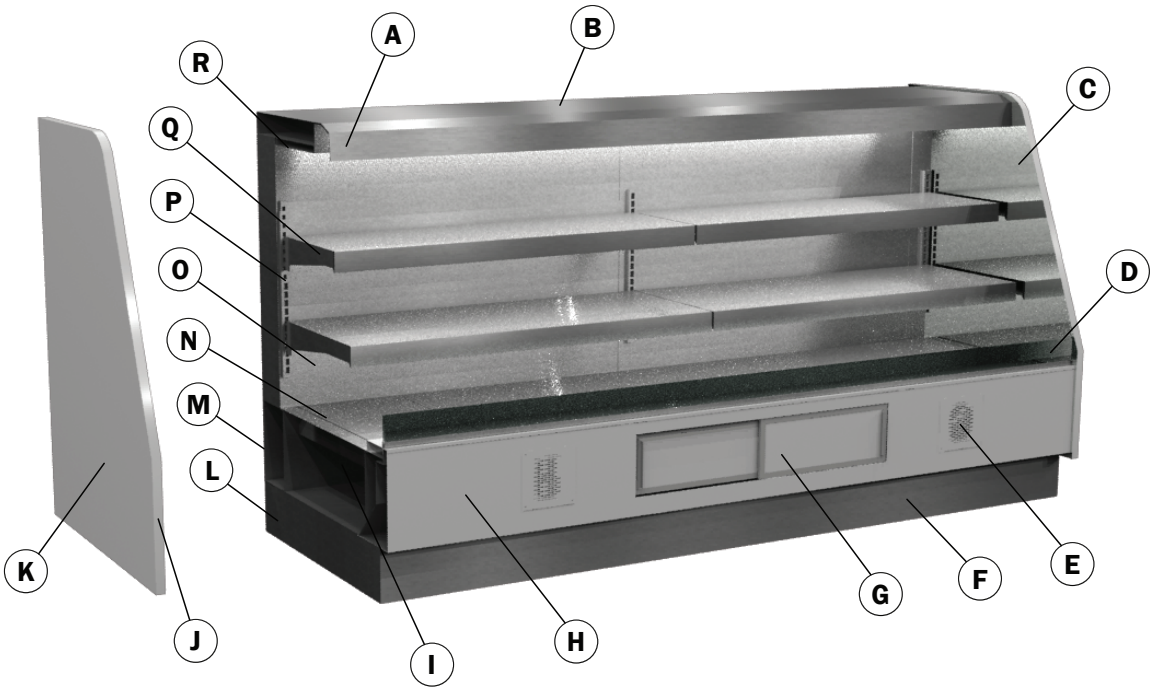

A	Light Guard
B	Case Top
C	Interior End Panel
D	Die Board Plex
E	Cooling Fan Ventilation
F	Front Toekick
G	Heat Control Access Sliding Doors
H	Die Board
I	Insulated Lower Deck
J	End Panel Trim
K	End Panel
L	End Toekick
M	Outside Back
N	Heated Bottom Deck
O	Inside Back
P	Shelf Standard
Q	Adjustable Shelf Bracket
R	Top Heat

Hillphoenix

A DOVER COMPANY

Hill PHOENIX, Inc.
Hereinafter Referred To As Manufacturer

LIMITED WARRANTY

GENERAL WARRANTY

Manufacturer's products are warranted to be free from defects in materials and workmanship under normal use and maintenance for fourteen months from date of shipment from manufacturer (the "Base Warranty Period"). In the event of a qualifying warranty claim, a new or rebuilt part to replace any defective part will be provided without charge. The replacement part is covered under this warranty for the remainder of the applicable Base Warranty Period. In order to be eligible for warranty coverage, customer must: (i) notify Manufacturer promptly upon discovery of a warrant defect, and (ii) comply with the warranty claim procedures provided by Manufacturer from time to time.

This equipment warranty does not include labor or other costs incurred for diagnosing, repairing, removing, installing, shipping, servicing, or handling of either defective parts or replacement parts.

The warranty shall not apply:

1. To any unit or any part thereof which has been subject to accident, alteration, negligence, misuse or abuse, or which has not been operated in accordance with the manufacturer's recommendations, or in conditions outside of Manufacturer's specifications, or if the serial number of the unit has been altered, defaced, or removed.
2. When the unit, or any part thereof, is damaged by fire, flood, or other act of God.
3. To products that are impaired or damaged due to improper installation.
4. When installation and startup forms are not properly completed or returned within two weeks after startup.
5. If the defective part is not returned to the Manufacturer.
6. To service, maintenance or wear and tear parts (such as lights, starters and ballasts)

MODIFICATIONS TO GENERAL WARRANTY

The following sets forth certain modifications to the General Warranty for specific products of Manufacturer:

DISPLAY CASE AND SPECIALTY PRODUCTS CLEARVOYANT® LED LIGHTING

The warranty period for Clearvoyant LED lighting components within the Clearvoyant lighting system is five years from date of shipment.

REMEDY LIMITATION/DAMAGES EXCLUSION

THE REMEDY OF REPAIR OR PROVISION OF A REPLACEMENT PART WITHOUT CHARGE SHALL BE THE EXCLUSIVE REMEDY FOR ANY WARRANTY CLAIM HEREUNDER. WITHOUT LIMITING THE FOREGOING, MANUFACTURER SHALL NOT BE LIABLE UNDER ANY CIRCUMSTANCES FOR INCIDENTAL, INDIRECT OR CONSEQUENTIAL DAMAGES, INCLUDING LOSS OF PROFIT, LABOR COST, LOSS OF REFRIGERANT OR FOOD PRODUCTS.

EXCLUSIVE WARRANTY

THE FOREGOING WARRANTY IS THE EXCLUSIVE WARRANTY WITH RESPECT TO THE PRODUCTS. ALL OTHER WARRANTIES, WHETHER EXPRESS OR IMPLIED, INCLUDING WITHOUT LIMITATION, THE WARRANTIES OF MERCHANTABILITY OR FITNESS FOR A PARTICULAR PURPOSE, ARE HEREBY DISCLAIMED AND EXCLUDED. NO IMPLIED WARRANTY SHALL BE DEEMED CREATED BY COURSE OF DEALING OR USAGE OF TRADE. NO OTHER PERSON IS AUTHORIZED TO EXPAND OR CREATE ANY OBLIGATION GREATER THAN OR MORE EXPANSIVE THAN THE WARRANTY PROVIDED HEREIN.

Submit warranty claims to:

Hillphoenix Refrigeration & Power Systems Division
2016 Gees Mill Road
Conyers, GA 30013
Att'n: Tom Bradshaw
Phone: 770-285-3267
tom.bradshaw@hillphoenix.com

Hillphoenix Display Case Division
1925 Ruffin Mill Road
Colonial Heights, VA 23834
Att'n: Harry Moy
Phone: 804-614-1457
harrymoy@hillphoenix.com

Hillphoenix Specialty Products Division
703 Franklin Street
Keosauqua, IA 52565
Attn Jake Bair
Phone: 319-293-8551
jake.bair@hillphoenix.com

Warning
Maintenance & Case Care

When cleaning cases the following must be performed PRIOR to cleaning:

To avoid electrical shock, be sure all electric power is turned off before cleaning. In some installations, more than one switch may have to be turned off to completely de-energize the case.

Do not spray cleaning solution or water directly on fan motors or any electrical connections.

All lighting receptacles must be dried off prior to insertion and re-energizing the lighting circuit.

Please refer to the Use and Maintenance section of this installation manual.

Hillphoenix®
A DOVER™ COMPANY

Tel: 319-293-3777

703 Franklin Street, PO Box 478, Keosauqua, IA 52565
Due to our commitment to continuous improvement, all specifications are subject to change without notice.
Hillphoenix is a Sustaining Member of the American Society of Quality.
Visit our website at www.hillphoenix.com