currys essentials

INTEGRATED BUILT UNDER FREEZER

INSTRUCTION / INSTALLATION MANUAL
CIF60W12



Contents

Unpacking **3**
- Location 4
- Reversing the Door Swing 4
- Reversing the Freezer Compartment Door Swing 7
- Height Regulation 8
- Installation of the Unit Under the Worktop 8
- Fastening the Unit Under the Worktop 8
- **Mounting the Kitchen Cabinet Door** **9**
- Fitting the Plinth 11
- Levelling the Unit 12
- Cleaning Before Use 12
- Before Using Your Unit 12
- Interior Accessories 12

Product Overview **13**

Operation **14**
- Switching On Your Unit 14
- Knowing Your Freezer Compartment 14
- Adjusting the Temperature 14
- Fast Freezing 15
- Noises Inside the Unit! 15
- Shopping for Chilled Foods 15
- Tips for Keeping Food in the Unit 15
- Shopping for Frozen Foods 15
- Preparations for Freezing 16
- Defrosting Frozen Food 16

Cleaning **17**
- Defrosting 17
- Cleaning the Interior and the Exterior of the Unit 17
- Cleaning Tips 17

Maintenance **18**
- Changing the Internal Light 18
- Care When Handling / Moving Your Unit 18
- Servicing 18
- Switching Off for Long Periods of Time 18

Disposal **18**

Hints and Tips **19**

Specifications **20**
- Normal energy consumption 21
- Increased energy consumption 21

Safety Warnings **22**

Thank you for purchasing your new Currys Essentials Integrated Built Under Freezer.

You must spend some time reading this instruction manual in order that you fully understand all the operational features it offers.

Read all the safety instructions carefully before use and keep this instruction manual for future reference.

Unpacking

Remove all packaging from the unit. Retain the packaging. If you dispose of it please do so according to local regulations.

The following items are included:

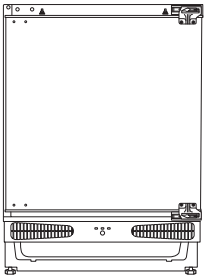

The Main Unit

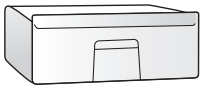

Freezer Drawer x 3
P.N.: 42038209

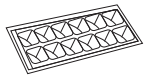

Ice Tray x 1
P.N.: 42053128



Wood Screw x 17
P.N.: 37001045

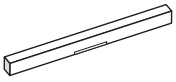

Hang Cover x 1
P.N.: 42038292

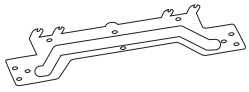

Door Hang x 1
P.N.: 37011134



Door Bottom
Fixing x 2
P.N.: 37002541



Screw x 1
P.N.: 35000714

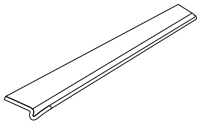

Rubber Strip x 1
P.N.: 42040731

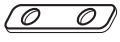

Top Bracket x 1
P.N.: 37011132



Instruction / Installation
Manual x 1
P.N.: 52067960

If items are missing or damaged please contact Partmaster (UK only).
Tel: 0844 800 3456 for assistance.

* All images are for indication only; please refer to your individual unit for actual item.

Location

When selecting a position for your unit you should make sure the floor is flat and firm, and the room is well ventilated with an average room temperature of between 10°C and 32°C. Avoid locating your unit near a heat source, e.g. cooker, boiler or radiator. Also avoid direct sunlight as it may increase the electrical consumption. Extreme cold ambient temperatures may also cause the unit not to perform properly. This unit is not designed for use in a garage or outdoor installation.

Ensure that a mains supply socket is within reach of the unit where it is to be installed and is easily accessible, or has an easily accessible double pole switch in the fixed wiring allowing full disconnection. If no socket or switch is available contact a qualified electrician to install one.

- If you want to have the door swing reversed, we recommend that you contact a qualified technician. You should only try to reverse the door yourself if you believe that you are qualified to do so.
- All parts removed must be saved to do the reinstallation of the door. You should rest the unit on something solid so that it will not slip during the door change process. Do not lay the unit flat as this may damage the coolant system. Ensure the unit is unplugged and empty.

Reversing the Door Swing

Tools required: Phillips style screwdriver / Flat bladed screwdriver / Hexagonal spanner

- This must be done before fitting the cabinet outer door.
- Adjust the two levelling feet to their highest position.
- To take the door off it is necessary to tilt the unit backwards. You should rest the unit on something solid so that it will not slip during the door reversing process.
- All parts removed must be saved to do the reinstallation of the door.
- Do not lay the unit flat as this may damage the coolant system.
- We recommend that 2 people handle the unit during assembly.

1. Remove the 4 blanking plates from the outside of the fridge door. Ensure you do not damage the blanking plates as they will be required to cover the other holes when the hinges are removed.

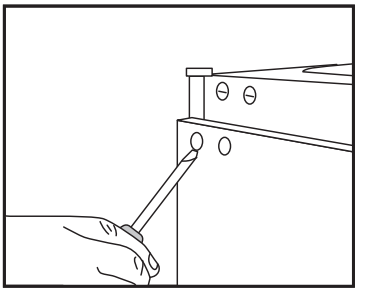

* All images are for indication only; please refer to your individual unit for actual item.

2. With the door closed remove the screws on the outside of the hinges. Start with the top hinge.

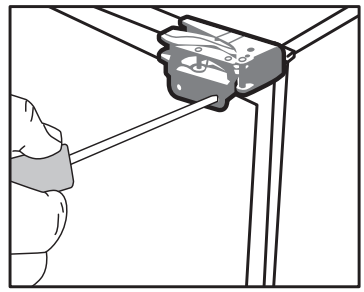

3. Open the hinges away from the door.

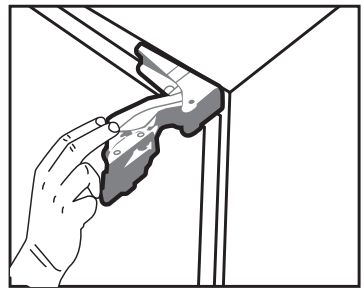

4. Remove the door, while supporting the bottom of the door. Be careful with the hinges.

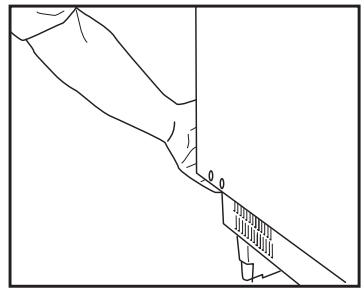

5. With the hinges open undo the screws holding them to the cabinet. Be careful with the hinges, use a long shafted screwdriver if you have one.

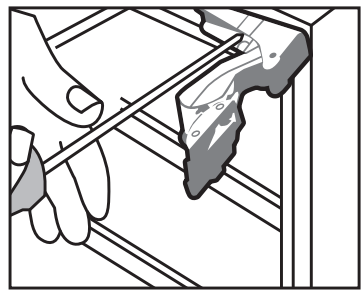

* All images are for indication only; please refer to your individual unit for actual item.

6. Remove the 4 blanking plates from the fridge cabinet.

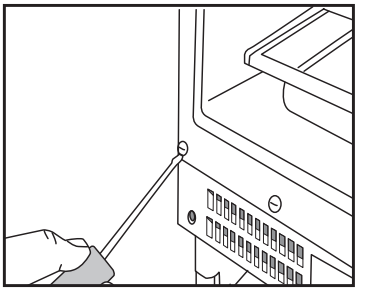

7. Turn the hinges over and place them on the diagonally opposite corner of the cabinet. Screw them back in place. Replace all the blanking plates on the opposite side of both the cabinet and the fridge door.

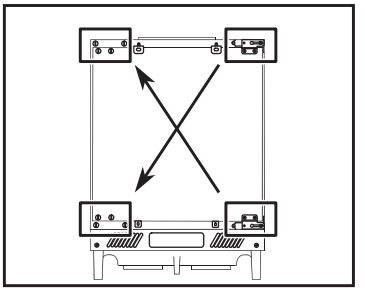

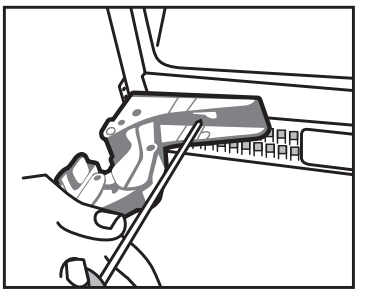

8. With the door closed, check that the door is aligned horizontally and vertically and that the seals are closed on all sides before finally tightening the bottom hinge. Re-adjust the levelling feet as needed.

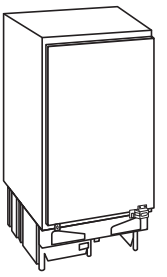

* All images are for indication only; please refer to your individual unit for actual item.

Dimensions

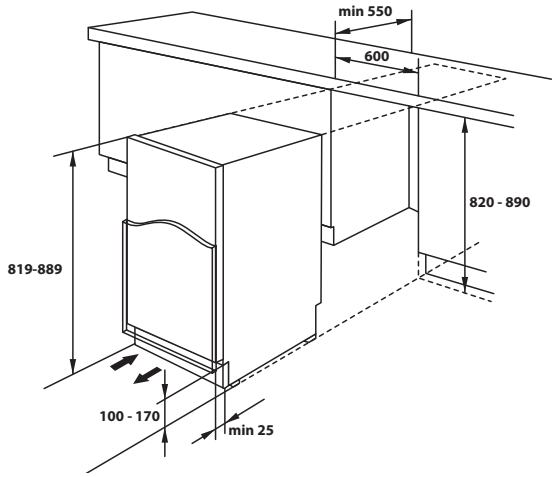

Installation of the Unit Under the Worktop

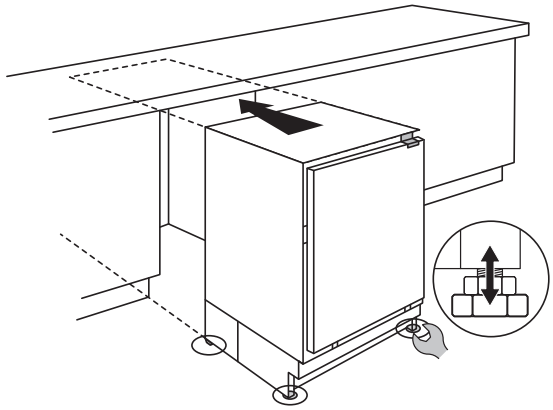

Take care that the legs are not dragged when sliding the unit under the counter as this could lead to breakages.

* All images are for indication only; please refer to your individual unit for actual item.

Fastening the Unit

1. Remove the screw at the top of the unit. Place the top bracket and fix the bracket with the screw.

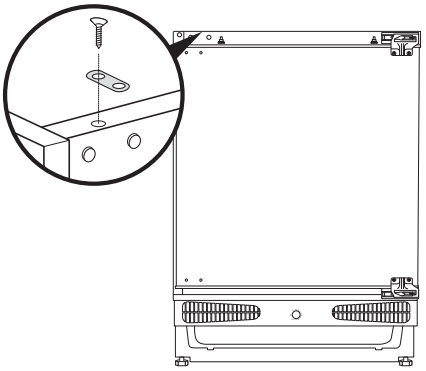

2. Remove the rubber strip located on the side panel. Remove the backing paper from the rubber strip.

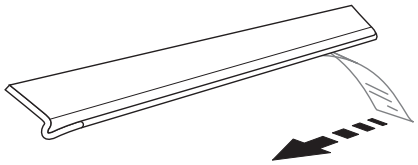

3. Stick the rubber strip to the opposite side of the door hinges of the unit. The rubber strip must be fitted to the side of the unit.

> Ensure the surface is clean prior to sticking the condensation strip to the side of the unit.

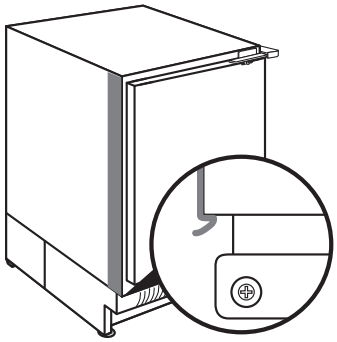

4. Adjust the levelling feet to fit the kitchen unit height, also ensuring the unit remains level.

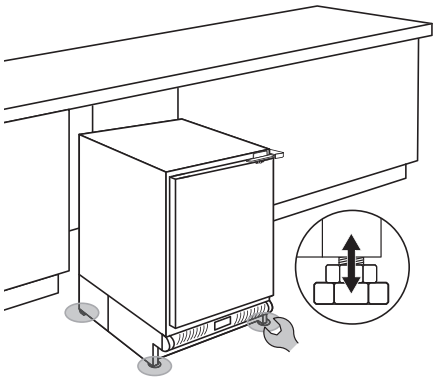

* All images are for indication only; please refer to your individual unit for actual item.

5. Slide the unit carefully, by lifting slightly to avoid damaging the feet, into the kitchen unit and align the hinge surface with front surface of the kitchen unit.

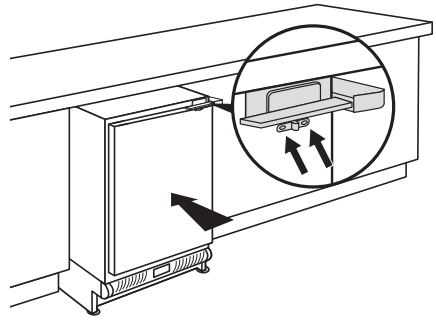

6. Screw the hinges and metal bracket to the kitchen unit.

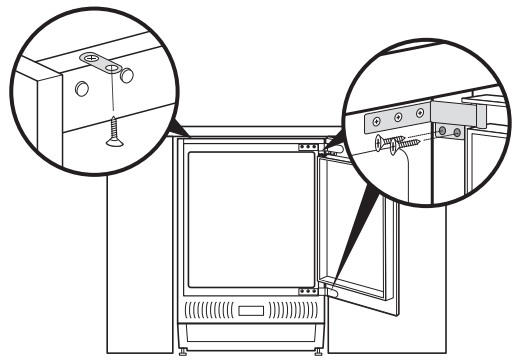

Mounting the Kitchen Cabinet Door

1. Unscrew and remove the nuts and washers from the fridge door.

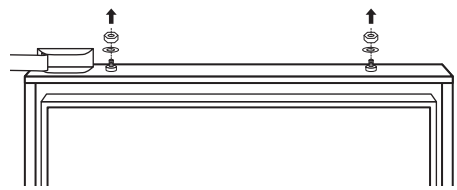

2. Place the door hang on the fridge door by inserting the holes onto the adjustment bolts.

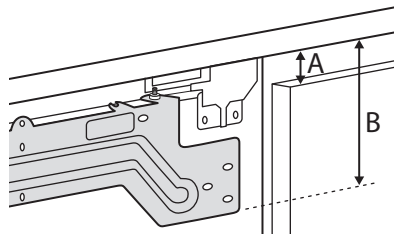

Dimension A:
Measure from the underside surface of kitchen unit to the top of next unit door.

Dimension B:
Measure from the underside surface of kitchen unit to the bottom of door hang.

* All images are for indication only; please refer to your individual unit for actual item.

INSTALLATION

3. To obtain the measurement for positioning the door hang, subtract A from B . Center the door hang horizontally and screw in the door hang as shown.

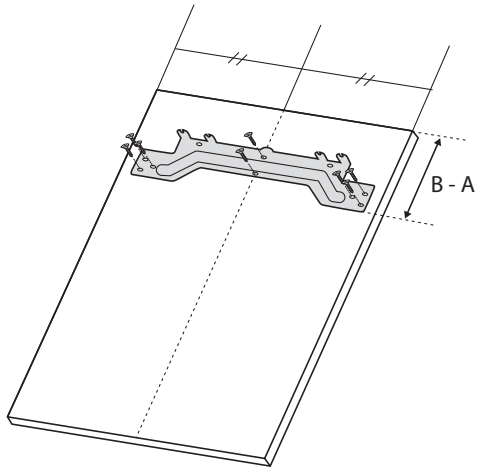

4. Place the kitchen cabinet (aesthetic) door onto the fridge door by inserting the adjustment bolts into the slots on the door hang. Place the washers and screw the nuts onto the adjustment bolts, do not tighten.

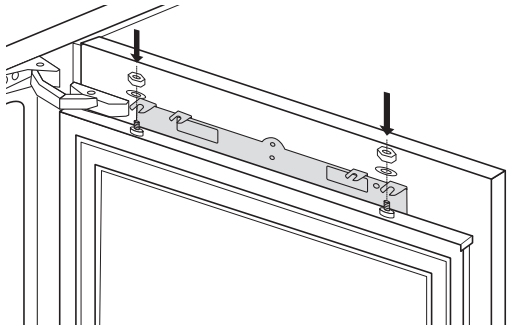

5. Align the kitchen cabinet (aesthetic) door by adjusting the double threaded bolts by using a flat bladed screwdriver (not included) of sufficient size. When supplied the adjustment will only allow unscrewing, do not try to tighten. Once alignment is achieved, tighten the nuts to fix the bracket, use the screwdriver to prevent the adjustment from moving if necessary.

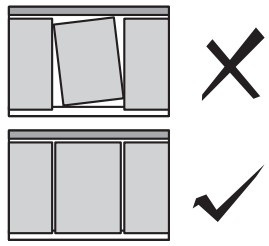

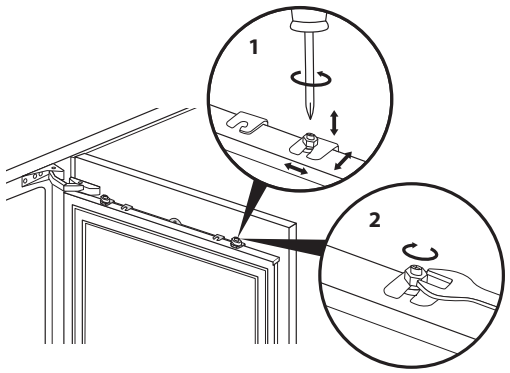

* All images are for indication only; please refer to your individual unit for actual item.

6. Remove the screws at the bottom of the fridge door.

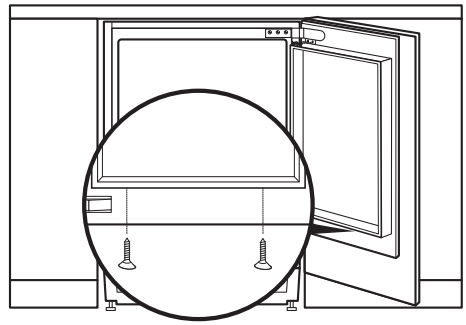

7. Place the door bottom fixings and screw the fixings to the fridge door and the cabinet door.

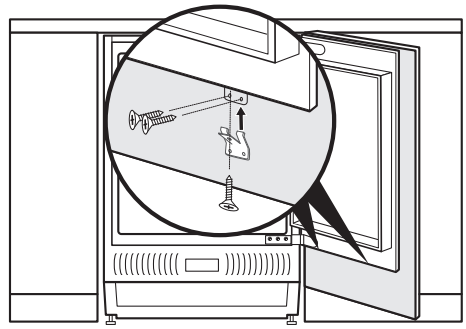

8. Slide the hang cover onto the door hang.

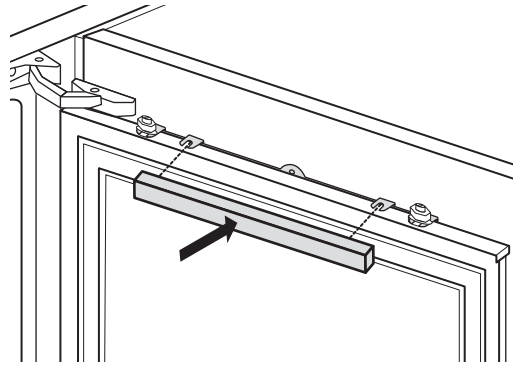

* All images are for indication only; please refer to your individual unit for actual item.

9. Slot in the plinth and ensure there is a minimum of 25 mm gap between the cabinet door and the plinth. The plinth may need to be notched depending upon the unit's height from the floor.

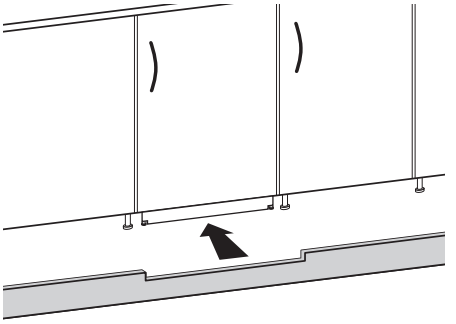

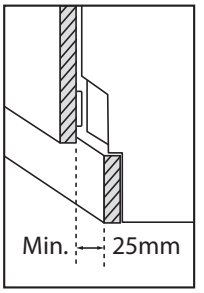

Cleaning Before Use

Wipe the inside of the unit with a weak solution of bicarbonate soda. Then rinse with warm water using a 'wrung-out' sponge or cloth. Wash the shelves and salad bin in warm soapy water and dry completely before replacing in the unit. Clean the exterior of the unit with a damp cloth.

If you require more information refer to the **Cleaning** section.

- **Before Plugging in YOU MUST**
  Check that you have a socket which is compatible with the plug supplied with the unit.
- **Before Turning On!**
  Do not turn on until two hours after moving the unit. The coolant fluid needs time to settle.

* All images are for indication only; please refer to your individual unit for actual item.

Before Using Your Unit

Before placing any food in your unit, turn it on and wait for 24 hours, to make sure it is working properly and to allow it time to fall to the correct temperature. Your unit should not be overfilled.

Product Overview

Main Unit

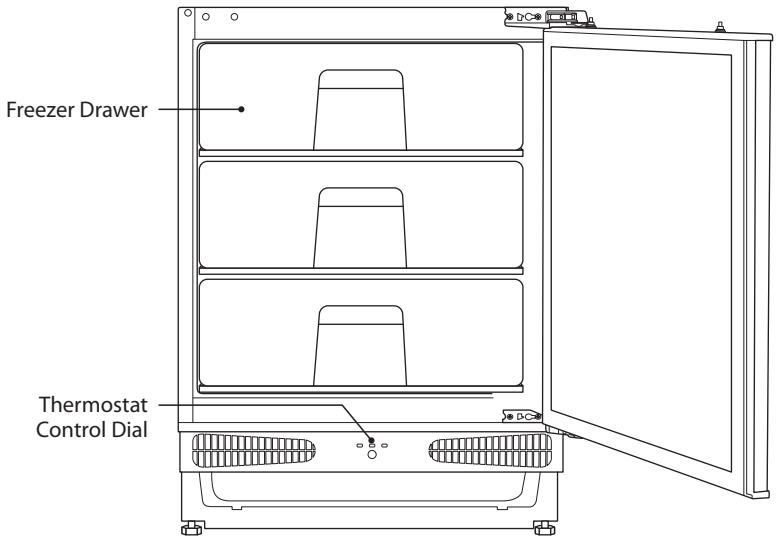

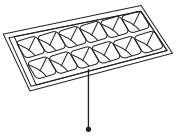

Control Panel

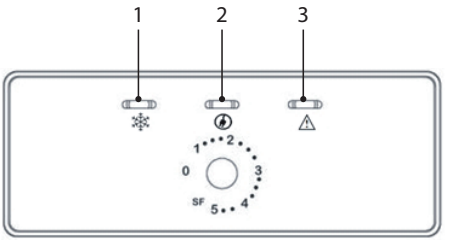

1. **Compressor Light**
   Lights orange, when the compressor runs. In SF mode, it will light continuously.
2. **Power Light**
   Lights green automatically, when the appliance is connected to the power supply.
3. **Alarm Light**
   Lights red, when the temperature rises to a critical point in side the freeze.

* All images are for indication only; please refer to your individual unit for actual item.

Operation

Switching On Your Unit

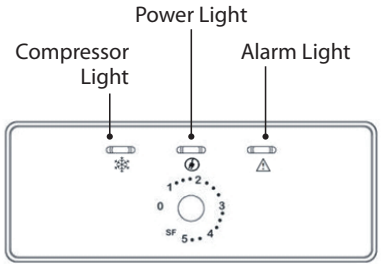

1. The internal temperature of your unit is controlled by a thermostat. There are seven settings, of which position **5** is the coldest, position **1** is the warmest and position **0** turns the unit off. For Details of SF setting see bottom of page box below.
2. Adjust the thermostat control dial to the desired position, bear in mind that the higher the number, the lower the temperature. Position **3** is the recommended setting for the unit when operating at normal room temperature (between 10°C and 32°C).
3. The unit may not operate at the correct temperature if it is in a particularly hot or a particularly cold room, or if you open the door often.
4. To ensure that the unit is cool enough to sufficiently chill your food, wait 24 hours before filling it with food.
5. If you are concerned that your unit is not being kept cold enough and wish to check the temperature, you will need a special fridge / freezer thermometer. These are available from most supermarkets and hardware shops.

   Place the thermometer in the centre of the unit, where it can be read easily. Leave overnight, the temperature in the fridge compartment should be 5°C or lower, while the freezer compartment should be -18°C or lower.

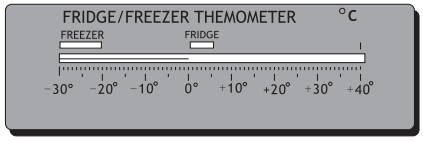

- **SF** : The compressor will start to run continuously with maximum performance. The freezer temperature will decrease and the appliance will switch to the lowest temperature. Place the food to be frozen quickly inside the freezer, preferably in the middle drawers. Once the food is frozen, you must set the thermostat knob to desired position.
- Observe that the orange lamp will light when the compressor runs. So when **SF** is active , the compressor will run continuously and the lamp will light continuously.
- The ambient temperature: Temperature of the freshly stored food and how often the door is opened, affects the temperature in the refrigerator and freezer compartments. If required, change the temperature setting.

* All images are for indication only; please refer to your individual unit for actual item.

Fast Food Freezing

Fresh food should be frozen as quickly as possible. Setting the thermostat to position **SF** makes your freezer operate at its coldest (approximately -28°C). The **Compressor Light** will light continuously. It allows you to quickly freeze your food and retain more of the goodness. Freezing will be complete after 24 hours. After 24 hours turn the thermostat back to the position based on the current environment. Never freeze large quantities of fresh food at one time.

Noises Inside the Unit!

You may notice that your unit makes some unusual noises. Most of these are perfectly normal, but you should be aware of them!

These noises are caused by the circulation of the refrigerant liquid in the cooling system. It has become more pronounced since the introduction of CFC free gases. This is not a fault and will not affect the performance of your unit. This is the compressor motor working, as it pumps the refrigerant around the system.

Shopping for Frozen Foods

- Check the temperature of the frozen food cabinet in the shop where you buy your frozen foods. It should show a temperature lower than -18°C.
- Take a quick look at the frozen food package and make sure it is in perfect condition.
- Always buy frozen products last on your shopping trip or visit to the supermarket. Try to keep frozen food together whilst shopping and on the journey home as this will help to keep the food frozen.
- Don't buy frozen food unless you can freeze it straight away. Specially insulated bags can be bought from most supermarkets and hardware shops. These bags can keep frozen food frozen longer.

Preparations for Freezing

- Use quality food and handle it as little as possible. Freeze food in small quantities as it freezes faster, takes less time to defrost and enables you to control the quantity you need better.
- Leave cooked food to cool completely. Chill food before freezing if possible.
- Consider how you will want to cook the food before freezing it.
- Don't freeze food in metal containers if you may want to microwave it straight from the freezer.
- Use special freezer bags, freezer film, polythene bags, plastic containers, and aluminium foil (heavy duty grade only). If in doubt, double wrap your food. Don't use aluminium foil for acidic foods, e.g. citrus fruits. Don't use thin cling film, glass, or used food containers without cleaning.
- Exclude as much air from the container as possible. You could buy a special vacuum pump which sucks excessive air out of the packaging.
- Leave a small amount of air space when freezing liquids to allow expansion.
- You can use the space in the freezer most efficiently if you freeze liquids (or solids with liquids, e.g. stew) in square blocks. This is known as "Preforming". Pour the liquid into a polythene bag which is inside a square sided container. Freeze it, and then remove it from the container and seal the bag.

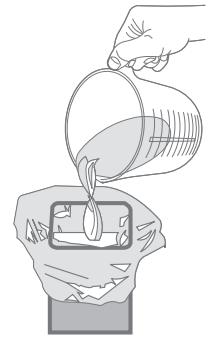

* All images are for indication only; please refer to your individual unit for actual item.

- Label your frozen foods as they will look the same when in frozen state. Use special fridge freezer tapes, labels and pens with different colours. This allows you to easily organise and to effectively use the freezer. Write the contents and date; otherwise the frozen food might exceed the storage time and this could cause food poisoning. Please refer to your food packaging for the recommended storage time.
- You may also add the weight and cooking notes, e.g. “defrost first”, “cook from frozen” and keep a separate log of what is in each drawer. This will save opening the door and searching around unnecessarily.

Defrosting Frozen Food

1. Take the frozen food out from the freezer compartment and uncover the frozen food. Let it defrost at room temperature. Don’t forget that defrosting in a warm area encourages the growth of bacteria and low temperature cooking may not destroy dangerous bacteria.
2. Drain off and throw away any liquid lost during defrosting.
3. Always make sure there are no ice-crystals in the food before cooking, particularly with meat. These crystals indicate that the food has not fully defrosted.
4. Cook food as soon as possible after defrosting.
5. Many microwaves and ovens have a defrost setting. To avoid bacterial build up, only use these if you intend to cook the food immediately afterwards.



Never refreeze anything that has been defrosted out unless you cook it again, to kill off harmful bacteria. Never re-freeze defrosted shellfish. Re-seal packs properly after removing items. This prevents drying or freezer-burn and a build up of frost on any remaining food.

Cleaning

Defrosting

Frost might build up in the unit after it has been used for a period of time. Scrape away the frost using a plastic scraper (not included).

> ⚠ Do not use a metal or sharp instrument to scrape away the frost, nor should you use any electrical appliances to aid defrosting.

Frost might build up in the freezer compartment after the unit has been used for a period of time. Scrape away the frost using a plastic scraper.

We recommend that defrosting should be carried out when the frost layer builds up to 3cm (~1.18”). Choose a time when the stock of frozen food is low, follow these procedures:

1. Take out the food, turn the unit off at the mains supply and leave the door open. Ideally, the frozen food should be put into another freezer. If this is not possible, wrap the food in several sheets of newspaper or large towels and then a thick blanket to keep it cool.
2. Place a shallow bowl or pan below the freezer compartment. Scrape away the frost using the plastic scraper. Defrosting the remaining frost can be speeded up by placing a bowl of hot water inside the freezer compartment cabinet and closing the door. As the solid frost loosens, scrape it away with the plastic scraper and remove.



3. When defrosting is complete, clean your unit’s interior and exterior.

Cleaning the Interior and the Exterior of the Unit

- Remove all the shelves and the salad bin. To remove the salad bin first remove the lower door shelf.
- Wipe the inside of the unit with a weak solution of bicarbonate soda and then rinse with warm water using a ‘wrung-out’ sponge or cloth. Wipe completely dry before replacing the shelves and salad bin.
- Use a damp cloth to clean the exterior, and then wipe with a standard furniture polish. Make sure that the door is closed to avoid the polish getting on the magnetic door seal or inside the unit.
- The grille of the condenser at the back of the unit and the adjacent components can be vacuumed using a soft brush attachment.

Cleaning Tips

Condensation may appear on the outside of the unit. This may be due to a change in room temperature. Wipe off any moisture residue. If the problem continues, please contact a qualified technician for assistance.

* All images are for indication only; please refer to your individual unit for actual item.

Maintenance

Care When Handling / Moving Your Unit

Hold the unit around its sides or base when moving it. Under no circumstances should it be lifted by holding the edges of the top surface.

Servicing

The unit should be serviced by an authorised engineer and only genuine spare parts should be used. Under no circumstances should you attempt to repair the unit yourself. Repairs carried out by inexperienced persons may cause injury or serious malfunction. Contact a qualified technician.

Switching Off for Long Periods of Time

When the unit is not in use for a long period of time, disconnect it from the mains supply, empty all food and clean the appliance, leaving the door ajar to prevent unpleasant smells.

Disposal

Old units still have some residual value. An environmentally friendly method of disposal will ensure that valuable raw materials can be recovered and used again. The refrigerant used in your unit and insulation materials require special disposal procedures. Ensure that none of the pipes on the back of the unit are damaged prior to disposal.

Up to date information concerning options of disposing of your old unit and packaging from the new one can be obtained from your local council office.

When disposing of an old unit break off any old locks or latches and remove the door as a safeguard.

Specifications

Model	CIF60W12
Frozen Food Storage Volume	95L ✳***
Storage Temperature	≤ -18°C
Energy Consumption	0.511kWh / 24h
Energy consumption **187 kwh per year**, based on standard test results for 24 hours. Actual energy consumption will depend on how the appliance is used and where it is located.	
Household Appliances Category	Category 8 (Upright-freezer)
Energy Grading	A+
EU Ecolabel	N/A
Defrosting Type	Manual Defrost
Climate Class	SN
This appliance is intended to be used at an ambient temperature between 10°C and 32°C.	
Airborne Acoustical Noise	44 dB(A)
Temperature Rise Time	18 hours
Rated Voltage	220 - 240V~
Rated Current	0.49A
Overall Dimension (W x D x H)	595 x 548 x 818 mm

Features and specifications are subject to change without prior notice.

eco ideas

	Normal energy consumption	Increased energy consumption
Installation site	In a ventilated room. Protected from direct sunlight. Not situated near to a heat source (radiator, oven). Where the ideal ambient room temperature is approx 20°C.	In an enclosed, unventilated room. In direct sunlight. Situated near to a heat source (radiator, oven). Where there is a high ambient room temperature.
Temperature setting with a thermostat which is approximate (set in stages).	With a medium setting of 3.	With a high setting: the lower the temperature in the compartment, the higher the energy consumption.
Use	Only open the doors when necessary and for as short a time as possible. Store food in an organised way. Allow hot food and drinks to cool down before placing them in the appliance. Store food covered or packaged. Place frozen food in the refrigerator to defrost. Do not over-fill the appliance to allow air to circulate.	Frequent opening of the doors for long periods with cause a loss of coldness. If food is not stored in an organised way, searching for an item will mean the door is open for longer. Placing hot food in the appliance will cause the compressor to run for a long time, as the appliance will have to work harder to lower the temperature. The evaporation or condensation of liquids will cause a loss of coldness in the refrigerator.
Defrosting	Defrost the freezer compartment when a layer of ice 3 cm thick has built up.	A layer of ice hinders the cold from reaching the frozen food, and causes an increase in energy consumption.

Safety Warnings

For your continued safety and to reduce the risk of injury or electric shock, please follow all the safety precautions listed below.

- This unit is designed for Domestic / Household use only.
- Read all instructions carefully before using the unit and keep them for future reference.
- Check that the voltage marked on the rating label matches your main voltage.
- Retain the manual. If you pass the unit onto a third party, make sure to include this manual.
- Keep ventilation openings in the unit enclosure clear of obstructions.
- Do not use mechanical devices or other means to accelerate the defrosting process, other than those recommended by the manufacturer.
- Do not use electrical appliances inside the food storage compartments of the unit, unless they are of the type recommended by the manufacturer.
- If the mains cable is damaged, it must be replaced by the manufacturer, its service agent or a qualified technician in order to avoid a hazard.
- Choose a location for your unit away from heat sources such as radiators or fires as refrigerant and vesicant are burnable.
- Young children should be supervised to ensure that they do not play with the unit.
- Do not damage the refrigerant circuit (applicable only for appliances with refrigeration circuits which are accessible to the user).
- The unit must be maneuvered by a minimum of 2 persons.
- This unit is not intended for use by persons (including children) with reduced sensory or mental capabilities, or lack of experience and knowledge unless they have been given supervision or instructions concerning the use of the unit by a person responsible for their safety.
- If your unit is fitted with a lock to prevent children being trapped inside, keep the key out of reach and not in the vicinity of the unit.
- Do not store volatile or flammable substances in the unit.
- Do not store bottles or glass containers in the freezer compartment. Contents can expand when frozen (fizzy drinks) which may break the bottle and damage your freezer compartment.

WARNING



IT IS HAZARDOUS FOR ANYONE OTHER THAN AUTHORISED SERVICE PERSONNEL TO CARRY OUT SERVICING OF REPAIRS WHICH INVOLVE THE REMOVAL OF COVERS.



TO AVOID THE RISK OF AN ELECTRICAL SHOCK DO NOT ATTEMPT REPAIRS YOURSELF.

If you require a replacement for any of the items listed below, please quote their corresponding part numbers:

Replacement Part	Part Number
Small Freezer Drawer	42038209
Ice Tray	42053128
Wood Screw	37001045
Door Hang	37011134
Door Bottom Fixing	37002541
Hang Cover	42038292
Screw	35000714
Top Bracket	37011132
Rubber Strip	42040731

Partmaster.co.uk

Visit Partmaster.co.uk today for the easiest way to buy electrical spares and accessories. With over 1 million spares and accessories available we can deliver direct to your door the very next day. Visit www.partmaster.co.uk or call 0844 800 3456 (UK customers only). Calls charged at National Rate.



This symbol on the product or in the instructions means that your electrical and electronic equipment should be disposed at the end of its life separately from your household waste. There are separate collection systems for recycling in the EU.

For more information, please contact the local authority or your retailer where you purchased the product.

DSG Retail Ltd • Maylands Avenue • Hemel Hempstead
Herts • HP2 7TG • England

(P.N.: 52067960)