SANYO

INSTRUCTION MANUAL

MPR-514
MPR-514R

Pharmaceutical Refrigerator

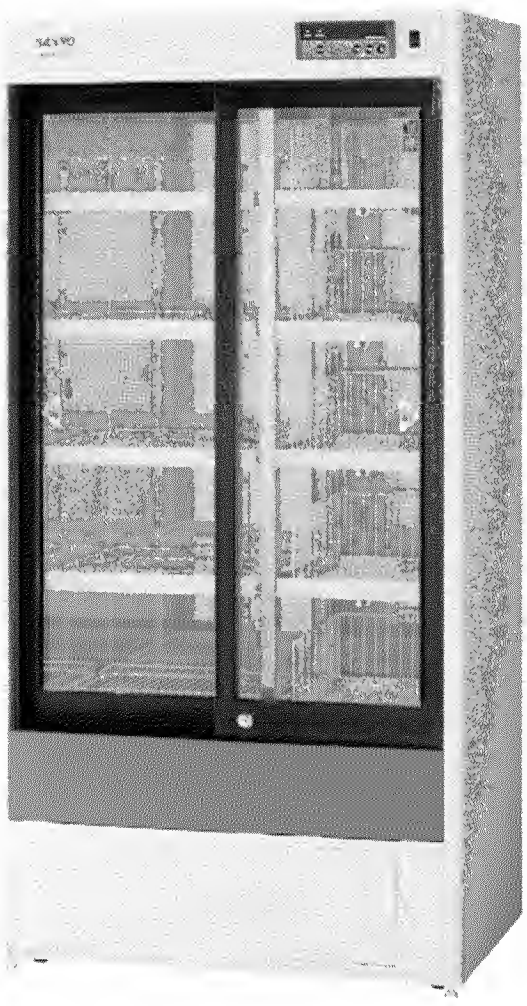

MPR-514R

CONTENTS

INTRODUCTION	P. 2
PRECAUTIONS FOR SAFE OPERATION	P. 3
ENVIRONMENTAL CONDITIONS	P. 7
CAUTIONS FOR USAGE	
Circuit breaker	P. 7
REFRIGERATOR COMPONENTS	
Refrigerator unit	P. 8
Control panel components	P. 10
INSTALLATION SITE	P. 11
INSTALLATION	P. 12
START-UP OF UNIT	P. 13
CHAMBER TEMPERATURE SETTING	P. 14
LOCK OF CHAMBER TEMPERATURE	P. 15
DEFROST OF EVAPORATOR	P. 16
ALARM TEMPERATURE SETTING	
Setting of high temperature alarm	P. 17
Setting of low temperature alarm	P. 18
SETTING OF DELAY OF DOOR ALARM	P. 19
SETTING OF RINGBACK OF ALARM BUZZER	P. 20
OPERATION CHECK AFTER RECOVERY	P. 20
REMOTE ALARM TERMINAL	P. 21
ALARM FUNCTIONS	P. 22
Air circulation alarm	P. 22
SELF DIAGNOSTIC FUNCTIONS	P. 23
SAFETY FUNCTIONS	P. 23
ROUTINE MAINTENANCE	
Cleaning of exterior, interior, and accessories	P. 24
Replacement of fluorescent lamp	P. 25
Replacement of glow starter	P. 25
Cleaning of evaporating tray	P. 26
TROUBLESHOOTING	P. 27
DISPOSAL OF UNIT	P. 28
AUTOMTIC TEMPERATURE RECORDER	P. 33
INSTALLATION OF RECORDER	
Attachment of recorder MTR-0621LH	P. 34
Attachment of recorder MTR-G04A or MTR-G04C	P. 36
BATTERY FOR POWER FAILURE ALARM	P. 38
SETTING FOR BATTERY BEFORE STARTING	P. 40
SPECIFICATIONS	P. 41
PERFORMANCE	P. 42
SAFETY CHECK SHEET	P. 43

INTRODUCTION

■ Read this manual carefully before using the appliance and follow the instructions for safety operation.

■ Sanyo never guarantee any safety if the appliance is used for any objects other than intended use or used by any procedures other than those mentioned in this manual.

■ Keep this manual in an adequate place to refer to it as necessary.

■ The contents of the manual will be subjected to change without notice due to the improvement of performance or functions.

■ Contact Sanyo sales representative or agent if any page of the manual is lost or page order is incorrect.

■ Contact Sanyo sales representative or agent if any point in this manual is unclear or if there are any inaccuracies.

■ No part of this manual may be reproduced in any form without the expressed written permission of Sanyo.

PRECAUTIONS FOR SAFE OPERATION

It is imperative that the user complies with this manual as it contains important safety advice.

Items and procedures are described so that you can use this unit correctly and safely. If the precautions advised are followed, this will prevent possible injury to the user and any other person.

Precautions are illustrated in the following way:

⚠WARNING

Failure to observe WARNING signs could result in a hazard to personnel possibly resulting in serious injury or death.

⚠CAUTION

Failure to observe CAUTION signs could result in injury to personnel and damage to the unit and associated property.

Symbol shows;

△ this symbol means caution.

⃠ this symbol means an action is prohibited.

● this symbol means an instruction must be followed.

Be sure to keep this manual in a place accessible to users of this unit.

< Label on the unit >



This mark is labeled on the cover in which the electrical components of high voltage are enclosed to prevent the electric shock.
The cover should be removed by a qualified engineer or a service personnel only.

PRECAUTIONS FOR SAFE OPERATION

⚠WARNING

Do not use the unit outdoors. Current leakage or electric shock may result if the unit is exposed to rain water.

Only qualified engineers or service personnel should install the unit. The installation by unqualified personnel may cause electric shock or fire.

Install the unit on a sturdy floor and take an adequate precaution to prevent the unit from turning over. If the floor is not strong enough or the installation site is not adequate, this may result in injury from the unit falling or tipping over.

Never install the unit in a humid place or a place where it is likely to be splashed by water. Deterioration of the insulation may result which could cause current leakage or electric shock.

Never install the unit in a flammable or volatile location. This may cause explosion or fire.

Never install the unit where acid or corrosive gases are present as current leakage or electric shock may result due to corrosion.

Always ground (earth) the unit to prevent electric shock. If the power supply outlet is not grounded, it will be necessary to install a ground by qualified engineers.

Never ground the unit through a gas pipe, water main, telephone line or lightning rod. Such grounding may cause electric shock in the case of an incomplete circuit.

Connect the unit to a power source as indicated on the rating label attached to the unit. Use of any other voltage or frequency other than that on the rating label may cause fire or electric shock.

Never store volatile or flammable substances in this unit if the container cannot be sealed. These may cause explosion or fire.

Do not insert metal objects such as a pin or a wire into any vent, gap or any outlet on the unit. This may cause electric shock or injury by accidental contact with moving parts.

Use this unit in safe area when treating the poison, harmful or radiate articles. Improper use may cause bad effect on your health or environment.

Turn off the power switch (if provided) and disconnect the power supply to the unit prior to any repair or maintenance of the unit in order to prevent electric shock or injury.

Do not touch any electrical parts (such as power supply plug) or operate switches with a wet hand. This may cause electric shock.

PRECAUTIONS FOR SAFE OPERATION

⚠WARNING

Ensure you do not inhale or consume medication or aerosols from around the unit at the time of maintenance. These may be harmful to your health.

Never splash water directly onto the unit as this may cause electric shock or short circuit.

Never put containers with liquid on the unit as this may cause electric shock or short circuit when the liquid is spilled.

Never bind, process, or step on the power supply cord, or never damage or break the power supply plug. A broken supply cord or plug may cause fire or electric shock.

Do not use the supply cord if its plug is loose. Such supply cord may cause fire or electric shock.

Never disassemble, repair, or modify the unit yourself. Any such work carried out by an unauthorized person may result in fire, or electric shock or injury due to a malfunction.

Disconnect the power supply plug if there is something wrong with the unit. Continued abnormal operation may cause electric shock or fire.

When removing the plug from the power supply outlet, grip the power supply plug, not the cord. Pulling the cord may result in electric shock or fire by short circuit.

Disconnect the power supply plug before moving the unit. Take care not to damage the power cord. A damaged cord may cause electric shock or fire.

Disconnect the power plug when the unit is not used for long periods. Keeping the connection may cause electric shock, current leakage, or fire due to the deterioration of insulation.

If the unit is to be stored unused in an unsupervised area for an extended period, **ensure that children do not have access and that doors cannot be closed completely.**

The disposal of the unit should be accomplished by appropriate personnel. Remove doors to prevent accidents such as suffocation.

Do not put the packing plastic bag within reach of children as suffocation may result.

PRECAUTIONS FOR SAFE OPERATION

⚠CAUTION

Use a dedicated power source (a dedicated circuit with a breaker) as indicated on the rating label attached to the unit. A branched circuit may cause fire resulting from abnormal heating.

Connect the power supply plug to the power source firmly after removing the dust on the plug. A dusty plug or improper insertion may cause a heat or ignition.

Never store corrosive substances such as acid or alkali in this unit if the container cannot be sealed. These may cause corrosion of inner components or electric parts.

Check the setting when starting up of operation after power failure or turning off of power switch. The stored items may be damaged due to the change of setting.

Be careful not to tip over the unit during movement to prevent damage or injury.

Prepare a safety check sheet when you request any repair or maintenance for the safety of service personnel.

ENVIRONMENTAL CONDITIONS

This equipment is designed to be safe at least under the following conditions (based on the IEC 61010-1):

1. Indoor use;

2. Altitude up to 2000 m;

3. Ambient temperature 5°C to 40°C

4. Maximum relative humidity 80% for temperature up to 31°C decreasing linearly to 50% relative humidity at 40°C;

5. Mains supply voltage fluctuations not to exceed ±10% of the nominal voltage;

6. Other supply voltage fluctuations as stated by the manufacture;

7. Transient overvoltages according to Installation Categories (Overvoltage Categories) II; For mains supply the minimum and normal category is II;

8. Pollution degree 2 in accordance with IEC 60664.

CAUTIONS FOR USAGE

Circuit breaker

This unit is equipped with a circuit breaker on the back. Make sure to switch ON this breaker before the unit starts to run. Following figures show the circuit breaker position.

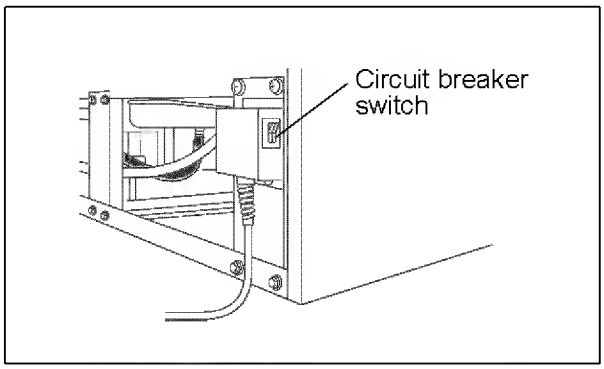

When the operation of the unit is stopped by this breaker, contact Sanyo sales representative or agent after disconnected the power supply plug.

REFRIGERATOR COMPONENTS

Refrigerator unit

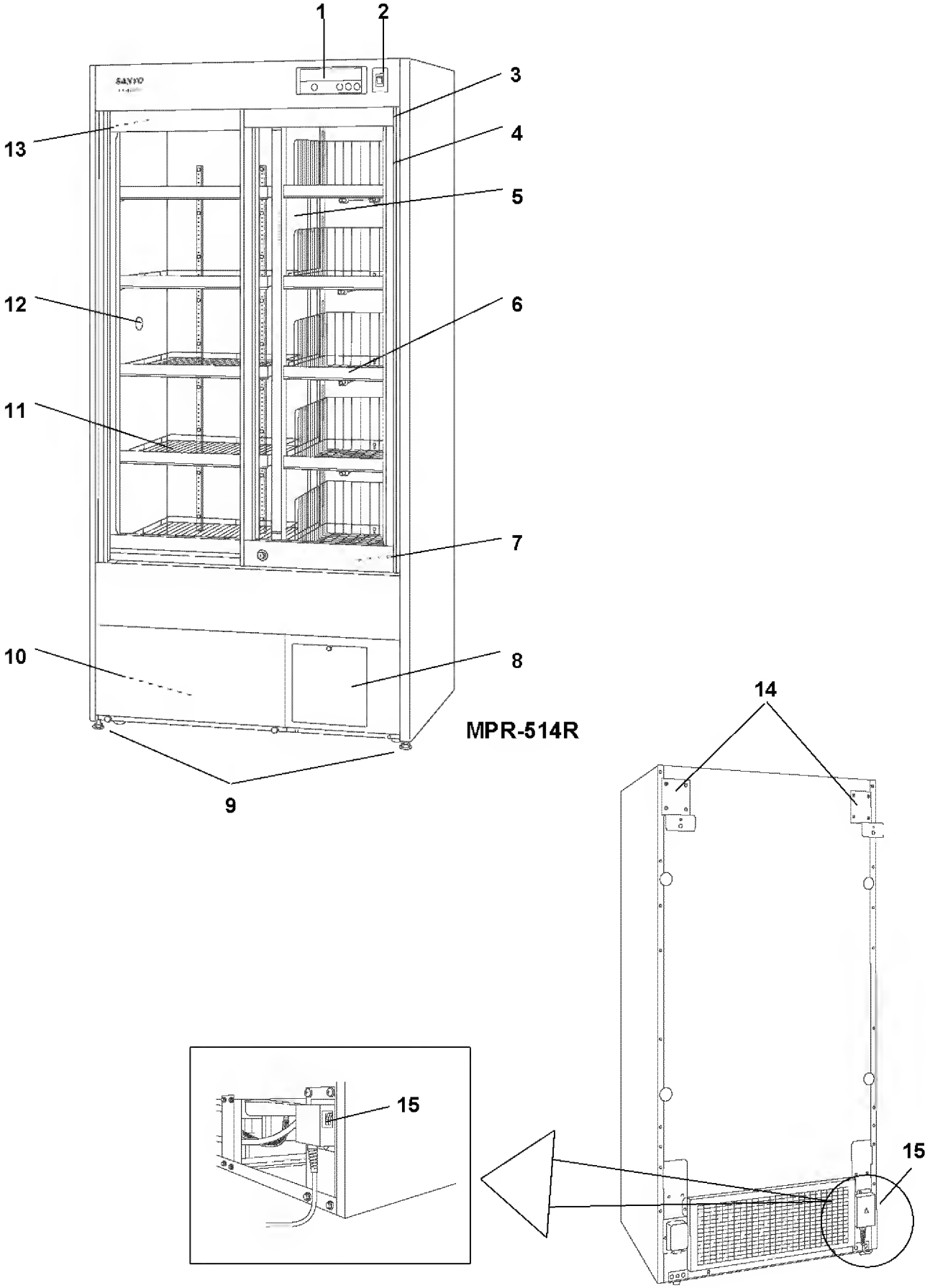

REFRIGERATOR COMPONENTS

1. Control panel: The chamber temperature and alarms can be set through the keys on the control panel. The temperature indicator and lamps are also provided on the control panel. Refer to page 10 for details.

2. Light switch: This switch is used for turning the fluorescent lamp off and on.

3. Door switch: This switch detects the door status (open/close). The door check lamp is ON when the door is open.

4. Door: Sliding type. The recessed portion on the rail enables the self-closing of the door. The glass is pair construction.

- The condensation may be found on the door frame with ambient humidity of about 50%R.H. and on the glass surface with ambient humidity of about 60%R.H. This is not a malfunction.
- The condensation on the door is dropped on the rail and exhausted to the evaporating tray.

5. Air exhaust vent: Do not block this vent. Arrange the stored items not to subject to the cold air from the vent.

6. Drawer (Right side of MPR-514R): To pull out the drawer, take out the drawer with pushing the button at the bottom of the drawer.

Note: Never pull out the multiple drawers at a time. It may cause tipping over of the unit.

7. Air intake vent (front bottom): Do not block this vent. Blocking this vent may cause unstable chamber temperature. Do not insert fingers or similar articles into the vent.

8. Space for automatic temperature recorder: An automatic temperature recorder (optional accessory) can be mounted here. See page 33.

- For the installation, contact Sanyo sales representative or agent.

9. Leveling feet (front): These are used for install the unit. Adjust the height of the leveling feet by turning the screw bolts until 2 front casters are away from the floor.

10. Evaporating tray: Defrost water from the evaporator accumulates in the tray and evaporates into the atmosphere. See page 26 for cleaning.

11. Shelf: The set location is adjustable.

- Items to be stored in the chamber must be placed on the shelves. Do not put stored items directly on the bottom of the chamber.

12. Access port: This port allows a sensor or cable of measuring equipment to enter the chamber from outside.

- Replace insulation and the rubber caps when the access port is not used. Improper replacement may cause rise of chamber temperature or condensation around the access port.

13. Exclusive alarm sensor: A sensor for detecting the temperature rise at the upper area of the chamber. Refer to page 22 for alarm functions.

14. Back spacer (also used as a fixture): To keep the space between the unit and the back wall for adequate cooling performance. And this can be used as a fixture. Fix the unit by using the fixture and a rope or chain.

15. Circuit breaker: Switch ON this breaker before the unit starts to run. When the operation of the unit is stopped by this breaker, contact Sanyo sales representative or agent after disconnecting the power supply plug.

REFRIGERATOR COMPONENTS

Control panel components

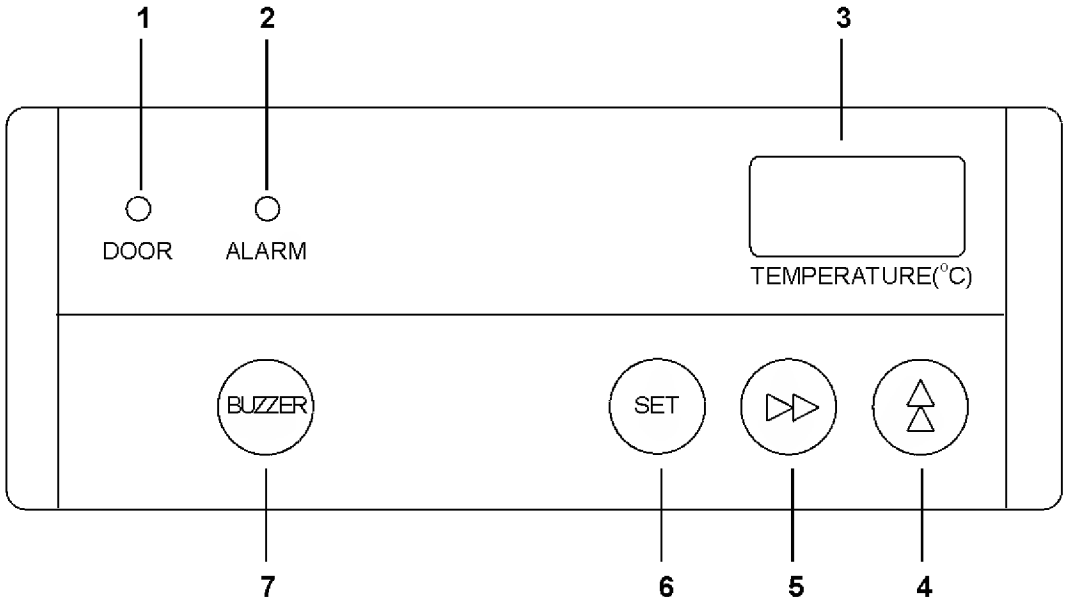

1. Door check indicator (DOOR): The red LED lamp is lit when the door is opened.

- 2 minutes after the door check indicator ON, the buzzer is activated to notice the door opening.

2. Alarm indicator (ALARM): The red LED lamp blinks during an alarm condition. See page 22.

3. Temperature display: Normally shows the present chamber temperature and during an alarm condition, shows an error code. See page 23.

4. Up arrow key (▲):

At "temperature display mode"; pressing this key for more than 5 seconds leads setting mode.
At "setting mode"; increases number values between choices. See page 14 to page 20.
At "setting of lock function"; selects ON-OFF of key lock for chamber temperature setting. See page 15.

5. Scroll key (▶▶):

At "temperature display mode"; pressing this key for more than 5 seconds leads "setting of lock function". See page 15.
At "setting mode"; moves the operator through digit on the display. See page 14 to page 20.

6. Set key (SET):

At "temperature display mode"; pressing this key leads "chamber temperature setting mode".
At "setting mode"; stores the value into computer memory.

7. Alarm buzzer stop key (BUZZER): Mutes the audible alarm.

- "temperature display mode": the status which the temperature display shows the current chamber temperature
- "setting mode"; the status which the temperature display is ready to be entered after pressing the up arrow key for 5 seconds.

INSTALLATION SITE

To operate this unit properly and to obtain maximum performance, install the unit in a location with the following conditions:

✧ A location not compliance with the following conditions may cause poor performance, failure or accident.

■ A location not subjected to direct sunlight

Do not install the unit under direct sunlight. Installation in a location subjected to direct sunlight may degrade the performance.

■ A location with adequate ventilation

Leave at least 10 cm around the unit for ventilation. Poor ventilation will result in a reduction of the performance and consequently the failure.

■ A location away from heat generating sources

Avoid installing the unit near heat-emitting appliances such as a heater or a boiler etc. Heat can decrease the intended performance of the unit.

■ A location with little temperature change

Install the unit under stable ambient temperature. Installing the unit under unstable ambient temperature may result in unstable performance.

■ A location with a sturdy and level floor

Always install the unit on a sturdy and level floor withstanding the total weight of the unit. The uneven floor or tilted installation may cause failure or injury. Unstable condition may cause vibration or noise.

■ A location not prone to high humidity

Install the unit in the ambient of 80% R.H. or less humidity. Installation under high humidity may cause current leakage or electric shock.

⚠CAUTION

The unit may collect excessive frost on the evaporator if it is installed in high temperature and high humidity location. This will cause frequent defrosting.

■ A location without flammable or corrosive gas

Never install the unit in a flammable or volatile location. This may cause explosion or fire or may result in the current leakage or electric shock by the corrosion of the electrical components.

⚠CAUTION

Never install the unit in a location where the corrosive material such as sulfur compound is likely to be generated (near a drainage facilities, etc). Corrosion of the copper pipe may result in deterioration of cooling unit and consequently the failure.

■ A location without the possibility of anything fall

Avoid installing the unit in the location where anything can fall down onto the unit. This may cause the breakdown or failure of the unit.

INSTALLATION

1. After unpackaging

Remove all transportation packaging materials and tapes. Open the doors and ventilate the unit. If the outside panels are dirty, clean them with a diluted neutral dishwashing detergent.

✧ Undiluted detergent can damage the plastic components. For the dilution, refer to the instruction of the detergent.

✧ After the cleaning with the diluted detergent, always wipe it off with a wet cloth. Then wipe off the panels with a dry cloth.

2. Installing the unit

Extend the leveling feet by rotating them counterclockwise to separate 2 front casters from the floor. [Fig. 1]
And adjust the leveling foot to level the unit.

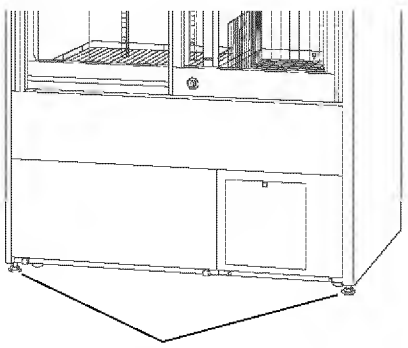

Fig. 1

3. Fixing the unit

Two fixtures are attached to the rear of the frame. Fix the frame to the wall by attaching a rope or chain between the wall and the fixtures.
If holes can be drilled in the wall, drill a 10.5 mm diameter hole [Fig. 2] and fix the unit by using the special bolt-nut supplied. This bolt-nut can only be used on a concrete wall.

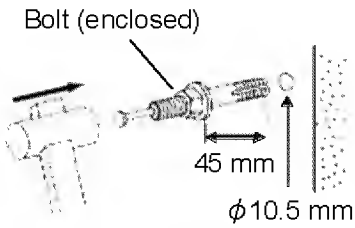

Fig. 2

4. Ground (earth) the unit

The ground (earth) is for preventing the electric shock in the case of the electrical insulation is somehow degraded. Always ground the unit at the time of installation.

✧ A 3-prong plug with grounding pole is provided to the poser supply cord. There is no need for electric work for grounding.

✧ If the power supply outlet is not grounded, it will be necessary to install a ground by qualified engineers.

START-UP OF UNIT

Follow the procedures for the initial and consequent operations of the unit.

✧ At the recovery after power failure, the operation is start-up automatically with the setting before power failure. See page 20.

1. Connect the power supply cord to the dedicated outlet with appropriate rating.

<Important>

If the unit is unplugged or the power to the unit is interrupted, do not restart the unit for at least 5 minutes. This protects the compressor.

2. On start-up, the alarm buzzer sometimes operates. In this case, stop the alarm buzzer by pressing the alarm buzzer stop key (BUZZER). (This is not a malfunction.)

<Important>

Close the door securely. The door check indicator is lit when the door is open. The alarm buzzer activates when the door is opened for more than 2 minutes. The alarm is canceled when the door is closed.

3. Allow the chamber temperature to fall to 5°C (The chamber temperature is set to 5°C at the factory). Check the chamber temperature on the temperature display.

4. Switch on the light switch to check the fluorescent lamp is on. After checking, turn off the fluorescent lamp if the light is not necessary.

5. Set the desired chamber temperature. See page 14.

6. When the chamber temperature gets to the set temperature, begin slowly placing items into the chamber to minimize the temperature rise.

<Important>

Always put the items on the shelf or in the drawer, not on the bottom of the chamber. Do not contact the items to the chamber walls.

Do not block the air intake vent nor air exhaust vent. Place the items with adequate space between them to keep the cool air circulation.

CHAMBER TEMPERATURE SETTING

Set the chamber temperature according to the condition of use. This refrigerator can keep the stored items for long period under appropriate temperature.

- Setting range of chamber temperature: between 2 and 14°C
- Initial setting (factory setting): 5°C

<Important>

The chamber temperature of 2°C may cause partial freeze of stored items.

Example: Change the chamber temperature to 4°C from 5°C

► Following shows a sample setting. Set the desired chamber temperature according to the condition of use.

	Description of operation	Key operated	Indication after operation
1	Connect the power supply plug to the dedicated outlet. (only when start-up of unit)	-----	The current chamber temperature is displayed. 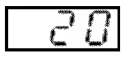
2	Press set key.	SET	The current setting (005) is displayed and the first digit blinks. 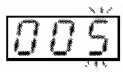
3	Press up arrow key and scroll the figure to 4.	▲	The display is changed to 004 from 005. 
4	Press set key.	SET	Set temperature is memorized and the current chamber temperature is displayed. 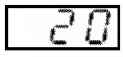

※ The setting mode returns to the temperature display mode automatically when 90 seconds has passed without any key operation (auto-return function). In this case, the setting is not accepted.

LOCK OF CHAMBER TEMPERATURE

The setting of chamber temperature can be protected to avoid an accidental change. When the lock is ON, change of chamber temperature setting through the key pad is not available.

■ Initial setting (factory setting): lock OFF

Display	Mode	Function
L 0	Lock is OFF	Enable to change the chamber temperature setting
L 1	Lock is ON	Disable to change the chamber temperature setting

Example: Change the lock to ON from OFF (factory setting)

	Description of operation	Key operated	Indication after operation
			The current chamber temperature is displayed. 
1	Press scroll key for 5 seconds.		The current setting (L 0) is displayed and the first digit blinks. 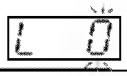
2	Press up arrow key once.		The display is changed to L 1 from L 0. 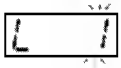
3	Press set key.	SET	Lock status is memorized and the current chamber temperature is displayed. 

✧ The setting mode returns to the temperature display mode automatically when 90 seconds has passed without any key operation (auto-return function). In this case, the setting is not accepted.

DEFROST OF EVAPORATOR

The following 2 kinds of defrost methods are provided with this refrigerator. Both defrost methods are controlled automatically.

■ **Cycle defrost**

To keep the chamber temperature stable, the refrigeration compressor is cycled on and off. During "off" period any frost which has accumulated on the evaporator is melted by energizing a defrost heater. This will not have any discernible effect on the chamber temperature.

■ **Forced defrost**

When the ambient humidity is high, or a large amount of damp product is being stored inside the chamber, there is a possibility that cycle defrost may not be enough to remove all of the frost on the evaporator. In this case, a forced defrost cycle can be initiated.

When the unit is operating under a forced defrost cycle, the current chamber temperature and dF is displayed alternately on the temperature display.

Once the forced defrost cycle is completed, normal operation resumes.

⚠CAUTION

The unit may collect excessive frost on the evaporator if it is installed in high temperature and high humidity location. For example, the unit starts to defrost once a week with 2°C setting in the ambient of 35°C and 80% R.H. **The chamber temperature goes up to approximately 10°C temporarily during defrosting.**

ALARM TEMPERATURE SETTING

Setting of high temperature alarm

By setting the high temperature alarm, the alarm indicator and temperature display blinks and alarm buzzer operates (after 15 minutes) when the chamber temperature is over the setting of high temperature alarm. Set the high temperature alarm to protect the stored items against the damage resulting from temperature rise.

- Setting range of high temperature alarm:
  Between chamber temperature plus 2°C and chamber temperature plus 14°C
- Initial setting (factory setting): chamber temperature plus 5°C

Example: Change the high temperature alarm to chamber temperature plus 3°C from chamber temperature plus 5°C

► Following shows a sample setting. Set the desired high temperature alarm according to the condition of use.

	Description of operation	Key operated	Indication after operation
1		-----	The current chamber temperature is displayed. 
2	Press up arrow key for 5 seconds.	▲▲	F00 is displayed and the first digit blinks. 
3	Press up arrow key once.	▲▲	The display is changed to F01 from F00. 
4	Press set key.	SET	The current setting (005) is displayed and the first digit blinks. 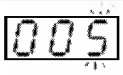
5	Press up arrow key and scroll the figure to 3.	▲▲	The display is changed to 003 from 005. 
6	Press set key.	SET	Set temperature is memorized and the current chamber temperature is displayed. 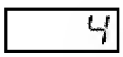

✧ The setting mode returns to the temperature display mode automatically when 90 seconds has passed without any key operation (auto-return function). In this case, the setting is not accepted.

<Important>

The high temperature alarm may be activated after defrosting or a large amount of load is stored in the chamber. This is not a malfunction. The high temperature alarm is cancelled automatically when the chamber temperature reaches the set temperature.

ALARM TEMPERATURE SETTING

Setting of low temperature alarm

By setting the low temperature alarm, the alarm indicator and temperature display blinks and alarm buzzer operates (after 15 minutes) when the chamber temperature is over the setting of low temperature alarm. Set the low temperature alarm to protect the stored items against the damage resulting from temperature lowering.

- Setting range of low temperature alarm:
  Between chamber temperature minus 2°C and chamber temperature minus 14°C
- Initial setting (factory setting): chamber temperature minus 5°C

Example: Change the high temperature alarm to chamber temperature minus 3°C from chamber temperature minus 5°C

► Following shows a sample setting. Set the desired low temperature alarm according to the condition of use.

	Description of operation	Key operated	Indication after operation
1		-----	The current chamber temperature is displayed. 
2	Press up arrow key for 5 seconds.	▲▲	F00 is displayed and the first digit blinks. 
3	Press up arrow key twice.	▲▲	The display is changed to F02 from F00. 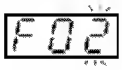
4	Press set key.	SET	The current setting (-05) is displayed and the first digit blinks. 
5	Press up arrow key and scroll the figure to 3.	▲▲	The display is changed to -03 from -05. 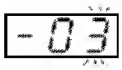
6	Press set key.	SET	Set temperature is memorized and the current chamber temperature is displayed. 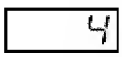

※ The setting mode returns to the temperature display mode automatically when 90 seconds has passed without any key operation (auto-return function). In this case, the setting is not accepted.

<Important>

Regardless of the setting of low temperature alarm, the alarm indicator and temperature display blinks and alarm buzzer operates if the chamber temperature is lower than 0°C to prevent the stored items from freezing.

SETTING OF DELAY OF DOOR ALARM

The door check indicator is light when the door is opened, and the alarm buzzer sounds with some delay to notice the door opening.
The delay time (between lighting of the door check indicator and activation of the alarm buzzer) can be changed. Set an appropriate delay time according to the condition of use to prevent the rise of chamber temperature resulting from inadequate door close.

- Setting range of delay time: 1 and 15 minutes
- Initial setting (factory setting): 2 minutes

Example: Change the delay time to 3 minutes from 2 minutes

▶ Following shows a sample setting. Set the desired delay time according to the condition of use.

	Description of operation	Key operated	Indication after operation
1		-----	The current chamber temperature is displayed. 
2	Press up arrow key for 5 seconds.	▲▲	F00 is displayed and the first digit blinks. 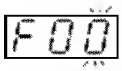
3	Press up arrow key 4 times.	▲▲	The display is changed to F04 from F00. 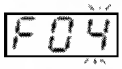
4	Press set key.	SET	The current setting (002) is displayed and the first digit blinks. 
5	Press up arrow key and scroll the figure to 3.	▲▲	The display is changed to 003 from 002. 
6	Press set key.	SET	Delay time is memorized and the current chamber temperature is displayed. 

※ The setting mode returns to the temperature display mode automatically when 90 seconds has passed without any key operation (auto-return function). In this case, the setting is not accepted.

SETTING OF RINGBACK OF ALARM BUZZER

The alarm buzzer operates again after certain period (ringback time) even if the alarm buzzer is silenced by pressing the alarm buzzer stop key (BUZZER) when the same alarm status is continued. Set the ringback time to prevent the misidentify the alarm status.

- Setting range of ringback time: between 10 and 60 minutes (10 minutes interval)
  Display of setting: between 010 and 060 (000 display shows no ringback)
- Initial setting (factory setting): 30 minutes

The alarm buzzer will not recover once the alarm buzzer is silenced by pressing the alarm buzzer stop key (BUZZER) when the ringback time is set to 000. However, the alarm buzzer will operate if other alarm status is detected.

Example: Change the ringback time to 20 minutes from 30 minutes

► Following shows a sample setting. Set the desired ringback time according to the condition of use.

	Description of operation	Key operated	Indication after operation
1		-----	The current chamber temperature is displayed. 
2	Press up arrow key for 5 seconds.	▲▲	F00 is displayed and the first digit blinks. 
3	Press up arrow key 5 times.	▲▲	The display is changed to F05 from F00. 
4	Press scroll key once.	▶▶	The second digit blinks. 
5	Press up arrow key twice.	▲▲	The display is changed to F25 from F05. 
6	Press set key.	SET	The current setting (030) is displayed and the second digit blinks. 
7	Press up arrow key and scroll the figure to 2.	▲▲	The display is changed to 020 from 030. 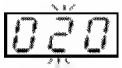
8	Press set key.	SET	Ringback time is memorized and the current chamber temperature is displayed. 

✧ The setting mode returns to the temperature display mode automatically when 90 seconds has passed without any key operation (auto-return function). In this case, the setting is not accepted.

✧ The setting should be performed during normal operation, not during alarm status.

OPERATION CHECK AFTER RECOVERY

After recovery from a power failure, the unit will resume operation automatically with the setting before power failure. Accordingly, there is no need for re-set however, always check the running status after recovery.

✧ The set value is memorized by nonvolatile memory during power failure.

REMOTE ALARM TERMINAL

The alarm status is noticed to a remote location when a remote alarm equipment (commercial item) is connected to the remote alarm terminal. It is recommended to install a remote alarm equipment (commercial item) when the refrigerator is installed in a desolate location so that an alarm status is noticed to an operator.

⇨ Contact Sanyo representative or agent for the installation of a remote alarm equipment (commercial item).

- Location of remote alarm terminal: rear lower left
- Allowable contact capacity: DC 30 V•2 A

The alarm status of remote alarm terminal is cancelled by pressing the alarm buzzer stop key (BUZZER) since the remote alarm is operated in conjunction with alarm buzzer.

The remote alarm terminal is in alarm status when the power supply cord is unplugged because it is regarded as a power failure. In this case, the alarm status of remote alarm terminal is not cancelled by pressing the alarm buzzer stop key (BUZZER).

Connection of remote alarm terminal

1. Remove the terminal cover at rear lower left of the cabinet by unscrewing 2 screws. [Fig. 4]

2. Connect the lead wire of a remote alarm equipment (commercial item) to the terminal.

3. Replace the terminal cover and fix it by 2 screws.

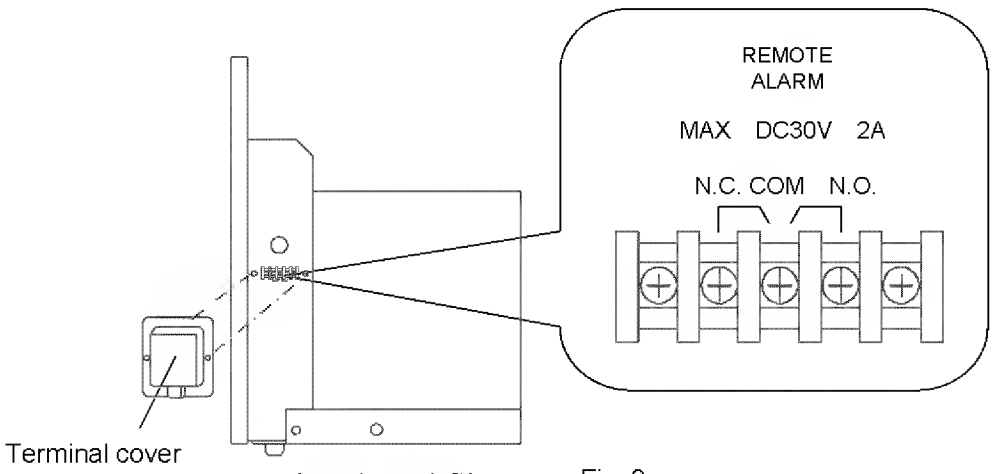

<rear lower left> Fig. 3

ALARM FUNCTIONS

This unit has the alarms functions shown below.

Alarms	Situation	Indication	Alarm buzzer	Remote alarm
High temp. alarm	If the chamber temp. is higher than the high temp. alarm setting.	Alarm indicator blinks. Chamber temp. blinks.	Intermittent tone with 15 minutes delay.	Alarm status with 15 minutes delay.
Air circulation alarm	If the chamber temp. distribution gets worse (chamber temperature at upper area is high)	Alarm indicator blinks.	Intermittent tone with 15 minutes delay.	Alarm status with 15 minutes delay.
Low temp. alarm	If the chamber temp. is lower than the low temp. alarm setting.	Alarm indicator blinks. Chamber temp. blinks.	Intermittent tone with 15 minutes delay.	Alarm status with 15 minutes delay.
0°C alarm	If the chamber temp. is lower than 0°C	Alarm indicator blinks. Chamber temp. blinks.	Intermittent tone	Alarm status.
Power failure alarm	At power failure. If the power supply cord is unplugged.	-----	-----	Alarm status.
Power failure alarm (with MPR-48B)	At power failure. If the power supply cord is unplugged.	Alarm indicator blinks.	Intermittent tone	Alarm status.
Door alarm	When the door is open.	Door check indicator blinks.	Intermittent tone with 2 minutes delay.	-----

✧ The alarm status of remote alarm terminal is cancelled by pressing the alarm buzzer stop key (BUZZER) since the remote alarm is operated in conjunction with alarm buzzer. (except for power failure alarm status)

Air circulation alarm

The alarm indicator blinks and the alarm buzzer sounds (after 15 minutes) when the sensor detects that the chamber temperature distribution is getting worse extremely. This may be caused by the block of cold air in the chamber due to the frost on the evaporator or stop of cooling fan motor.

✧ The air circulation is detected by the exclusive alarm sensor attached to the upper area of the chamber.

SELF DIAGNOSTIC FUNCTIONS

This unit has the self diagnostic functions shown below.

Self diagnostic	Situation	Indication	Alarm buzzer	Remote alarm
Sensor abnormality	If the thermal sensor is disconnected.	Alarm indicator blinks. E01 and chamber temp. is displayed alternately.	Intermittent tone	Alarm status
	If the thermal sensor is short-circuited.	Alarm indicator blinks. E02 and chamber temp. is displayed alternately.		
	If the defrost sensor is disconnected.	Alarm indicator blinks. E03 and chamber temp. is displayed alternately.		
	If the defrost sensor is short-circuited.	Alarm indicator blinks. E04 and chamber temp. is displayed alternately.		
	If the exclusive alarm sensor is disconnected.	Alarm indicator blinks. E13 and chamber temp. is displayed alternately.		
	If the exclusive alarm sensor is short-circuited.	Alarm indicator blinks. E14 and chamber temp. is displayed alternately.		
Setting check (with MPR-48B)	When the battery switch is turned ON without setting after attachment.	E09 and chamber temp. is displayed alternately.	-----	-----

- The alarm status of remote alarm terminal is cancelled by pressing the alarm buzzer stop key (BUZZER) since the remote alarm is operated in conjunction with alarm buzzer. (except for power failure alarm status)
- The error code with smaller figure is displayed if some errors are occurred simultaneously.
- The chamber temperature is controlled at about 5°C by the defrost sensor if the thermal sensor is disconnected or short circuited.

SAFETY FUNCTIONS

This unit has the safety functions shown below.

Safety	Situation	Indication, Buzzer	Safety operation
Over-heat protection	When the chamber temp. is higher than about 28°C.	-----	The defrost heater OFF. Fan motor for cold air circulation is OFF. Reset when the chamber temp. is lower than about 18°C.
Over-cool protection	When the chamber temp. is lower than about 0°C.	-----	Compressor OFF. Reset when the chamber temp. is higher than 6°C.
Auto-return	When there is no key pressing in setting mode for 90 seconds.	-----	Finishing of setting mode and returning to temp. display mode.
Key lock	When the key lock is ON (L1).	-----	Change of chamber temp. setting is disable.

ROUTINE MAINTENANCE

⚠WARNING

Always disconnect the power supply to the unit prior to any repair or maintenance of the unit in order to prevent electric shock or injury.

Ensure you do not inhale or consume medication or aerosols from around the unit at the time of maintenance. These may be harmful to your health.

Cleaning of exterior, interior, and accessories

Use a dry cloth to wipe off small amounts of dirt on the outside and inside of the unit and all accessories.
If the outside panels are dirty, clean them with a diluted neutral dishwashing detergent.
Wipe off the condensation on the glass or exterior of the cabinet with a dry soft cloth.

- Undiluted detergent can damage the plastic components. For the dilution, refer to the instruction of the detergent.
- After the cleaning with the diluted detergent, always wipe it off with a wet cloth. Then wipe off the cabinet or accessories with a dry cloth.

<Important> Never pour water onto or into the unit. This may cause electric shock or failure.

⚠CAUTION

Do not use a brush, an acid, a thinner, a laundry soap, a powder detergent, boiling water for cleaning. These cause damage of painted surface or failure of plastic and rubber components. Also, do not wipe the plastic and rubber components by a volatile material.

ROUTINE MAINTENANCE

Replacement of fluorescent lamp

Follow the procedure below when replacing a fluorescent lamp. The fluorescent lamp is located horizontally at upper front of the cabinet.

1. Turn off the light switch and disconnect the power supply plug of the refrigerator.

2. Move the stored items on the top shelf and in the top drawer (MPR-514R).

3. Pull the fluorescent lamp downwards from the stopper together with the lamp cover and wiring. [Fig. 4]

4. Remove the water-proof cover with the wiring on the both sides of the lamp cover.

5. Take out the fluorescent lamp and insert a new fluorescent lamp into the lamp cover.
(fluorescent lamp; FL20SD)

6. Replace the water-proof cover on the both sides of the lamp cover and then replace the lamp cover to the stopper.

7. Replace the stored items on the top shelf and in the top drawer (MPR-514R) and connect the power supply cord to the outlet.

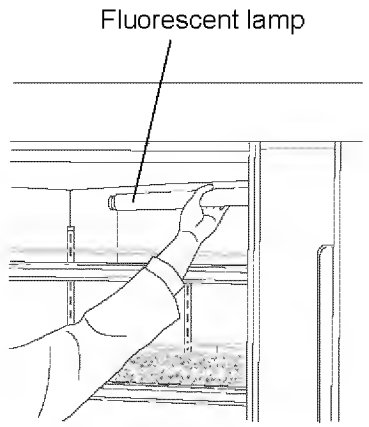

Fig. 4

Replacement of glow starter

The glow starter is located on the right side of top front in the chamber.

1. Turn off the light switch and disconnect the power supply plug of the refrigerator.

2. Remove the water-proof cover and take out the glow starter. (glow starter; FG-1P) [Fig. 5]

3. Attach a new glow starter and replace the water-proof cover.

4. Connect the power supply cord to the outlet.

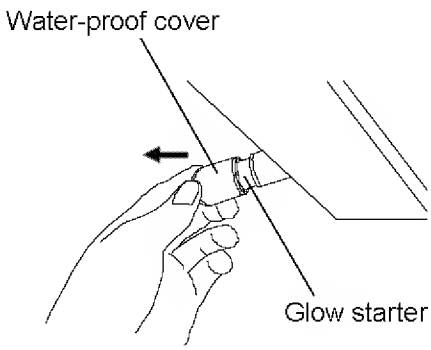

Fig. 5

ROUTINE MAINTENANCE

Cleaning of evaporating tray

1. As shown in Fig. 6, remove 2 screws on the bottom of the unit cover and remove the unit cover.

2. The evaporating tray is installed in the back.
Pull the clips on the both sides of the mounting plate to loosen the mounting plate. Take out the evaporating tray with the mounting plate as shown in Fig. 7.

3. Dispose any accumulated water in the evaporating tray.

4. Wash the evaporating tray with a diluted neutral dishwashing detergent and clean water.
✧ Never use the hot or boiling water to clean the tray.

5. Replace the evaporating tray in it original position and push the clips on the both sides of the mounting plate to fix the evaporating tray.

6. Replace the unit cover and fix it with 2 screws.

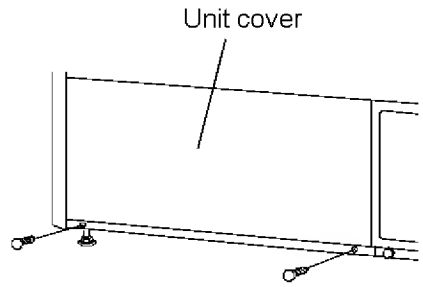

Fig. 6

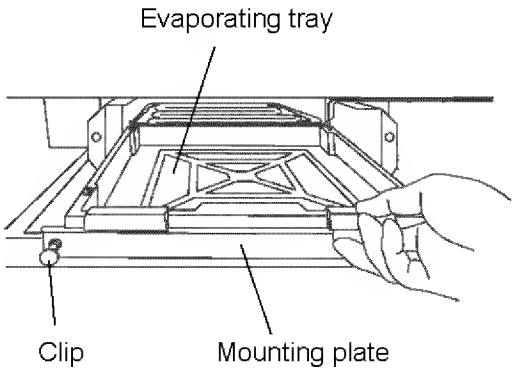

Fig. 7

TROUBLESHOOTING

If the unit malfunctions, check out the following before calling for service.

Malfunction	Check/Remedy
If nothing operates even when plugged in	□ The unit is not connected to the power supply properly. □ The capacity and voltage of power supply is not sufficient. □ There is a power failure. □ The circuit breaker on the supply circuit is activated. □ The fuse on the supply circuit is blown.
The alarm device is activated at start-up	✧ The alarm status is kept until the chamber temperature reaches the set temperature.
The alarm device is activated during operation	□ The unit is not connected to the power supply properly. □ The capacity and voltage of power supply is not sufficient. □ There is a power failure. □ The circuit breaker on the supply circuit is activated. □ The fuse on the supply circuit is blown. □ The chamber temperature setting was changed. □ The door was kept opened for a long time. □ The containers of high temperature (load) were put in the chamber. □ The door is opened.
No key operation is available	□ The key lock is set in ON (L 1). → Set the key lock in OFF (L 0).
During the setting mode, return to the temp. display mode	✧ The setting mode returns to the temperature display mode automatically when 90 seconds has passed without any key operation (auto-return function).
Noisy	□ The floor is not sturdy. □ The installation site is not level. □ The refrigerator is tilted. □ The cabinet contact the surrounding wall.
When chamber does not get cold enough	□ A large amount of items or warm product was put in the chamber. □ The door is frequently opened. □ The chamber temperature setting is high. □ The unit is in direct sunlight. □ The unit is not installed in the installation site specified in this manual. □ The ventilation around the unit is blocked. □ There is a nearby heat source. □ The ambient temperature is too high. → The allowable ambient temperature is between -5 and +35°C. □ The stored items is too much. □ The air exhaust vent is blocked up with containers. □ The access port is not covered. → The access port should be covered with the insulation and rubber caps when no use. □ The door seal is damaged. → If it is damaged, contact Sanyo sales representative or agent for replacement. □ Any foreign substance is located between door gaskets.

Note:

If the malfunction is not eliminated after checking the above items, or the malfunction is not shown in the above table, contact Sanyo sales representative or agent.

DISPOSAL OF UNIT

⚠WARNING

If the unit is to be stored unused in an unsupervised area for an extended period **ensure that children do not have access and doors cannot be closed completely.**

The disposal of the unit should be accomplished by appropriate personnel. Always remove doors to prevent accidents such as suffocation.

DISPOSAL OF UNIT

Note:
This symbol mark and recycle system are applied only to EU countries and not applied to the countries in the other area of the world.

Waste Electrical and Electronic Equipment (WEEE) Directive-2002/96/EC

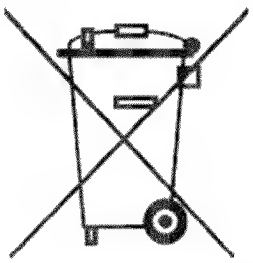



(English)
Your SANYO product is designed and manufactured with high quality materials and components which can be recycled and reused.

This symbol means that electrical and electronic equipment, at their end-of-life, should be disposed of separately from your household waste.

Please dispose of this equipment at your local community waste collection/recycling centre.

In the European Union there are separate collection systems for used electrical and electronic products.

Please help us to conserve the environment we live in!

(German)
Ihr SANYO Produkt wurde entworfen und hergestellt mit qualitativ hochwertigen Materialien und Komponenten, die recycelt und wiederverwendet werden können.

Dieses Symbol bedeutet, daß elektrische und elektronische Geräte am Ende ihrer Nutzungsdauer von Hausmüll getrennt entsorgt werden sollen.

Bitte entsorgen Sie dieses Gerät bei Ihrer örtlichen kommunalen Sammelstelle oder im Recycling Centre.

In der Europäischen Union gibt es unterschiedliche Sammelsysteme für Elektrik- und Elektronikgeräte.

Helfen Sie uns bitte, die Umwelt zu erhalten, in der wir leben!

DISPOSAL OF UNIT

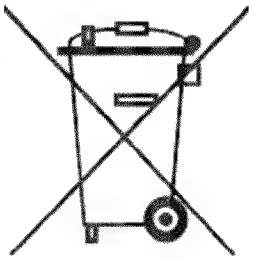

(French)
Votre produit Sanyo est conçu et fabriqué avec des matèriels et des composants de qualité supérieure qui peuvent être recyclés et réutilisés.

Ce symbole signifie que les équipements électriques et électroniques en fin de vie doivent être éliminés séparément des ordures ménagères.

Nous vous prions donc de confier cet équipement à votre centre local de collecte/recyclage.
Dans l'Union Européenne, il existe des systèmes sélectifs de collecte pour les produits électriques et électroniques usagés.

Aidez-nous à conserver l'environnement dans lequel nous vivons !

Les machines ou appareils électriques et électroniques contiennent fréquemment des matières qui, si elles sont traitées ou éliminées de manière inappropriée, peuvent s'avérer potentiellement dangereuses pour la santé humaine et pour l'environnement.
Cependant, ces matières sont nécessaires au bon fonctionnement de votre appareil ou de votre machine. Pour cette raison, il vous est demandé de ne pas vous débarrasser de votre appareil ou machine usagé avec vos ordures ménagères.

(Spanish)
Los productos SANYO están diseñados y fabricados con materiales y componentes de alta calidad, que pueden ser reciclados y reutilizados.

Este símbolo significa que el equipo eléctrico y electrónico, al final de su ciclo de vida, no se debe desechar con el resto de residuos domésticos.

Por favor, deposite su viejo "televisor" en el punto de recogida de residuos o contacte con su administración local.

En la Unión Europea existen sistemas de recogida específicos para residuos de aparatos eléctricos y electrónicos.

Por favor, ayúdenos a conservar el medio ambiente!

DISPOSAL OF UNIT

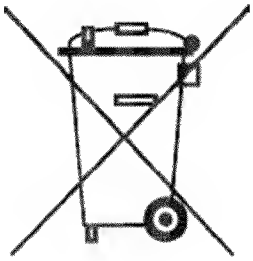

(Portuguese)
O seu produto SANYO foi concebido e produzido com materiais e componentes de alta qualidade que podem ser reciclados e reutilizados.

Este símbolo significa que o equipamento eléctrico e electrónico no final da sua vida útil deverá ser descartado separadamente do seu lixo doméstico.

Por favor, entregue este equipamento no seu ponto local de recolha/reciclagem.

Na União Europeia existem sistemas de recolha separados para produtos eléctricos e electrónicos usados.

Por favor, ajude-nos a conservar o ambiente em que vivemos!

(Italian)
Il vostro prodotto SANYO è stato costruito da materiali e componenti di alta qualità, che sono riutilizzabili o riciclabili.

Prodotti elettrici ed elettronici portando questo simbolo alla fine dell'uso devono essere smaltiti separatamente dai rifiuti casalinghi.

Vi preghiamo di smaltire questo apparecchio al deposito comunale.
Nell'Unione Europea esistono sistemi di raccolta differenziata per prodotti elettrici ed elettronici.

Aiutateci a conservare l'ambiente in cui viviamo!

DISPOSAL OF UNIT

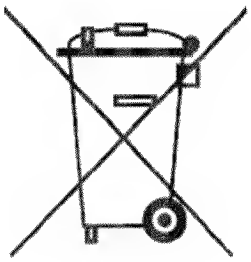

(Dutch)
Sanyo producten zijn ontwikkeld en gefabriceerd uit eerste kwaliteit materialen, de onderdelen kunnen worden gerecycled en weer worden gebruikt.

Het symbool betekent dat de elektrische en elektronische onderdelen wanneer deze vernietigd gaan worden , dit separaat gebeurt van het normale huisafval.

Zorg ervoor dat het verwijderen van de apparatuur bij de lokaal erkende instanties gaat gebeuren.
In de Europese Unie wordt de gebruikte elektrische en elektronische apparatuur bij de daarvoor wettelijke instanties aangeboden.

Alstublieft help allen mee om het milieu te beschermen.

(Swedish)
Din SANYO produkt är designad och tillverkad av material och komponenter med hög kvalitet som kan återvinnas och återanvändas.

Denna symbol betyder att elektriska och elektroniska produkter, efter slutanvändande, skall sorteras och lämnas separat från Ditt hushållsavfall.

Vänligen, lämna denna produkt hos Din lokala mottagningstation för avfall/återvinningsstation.

Inom den Europeiska Unionen finns det separata återvinningssystem för begagnade elektriska och elektroniska produkter.

Vänligen, hjälp oss att bevara miljön vi lever i!

AUTOMATIC TEMPERATURE RECORDER

The chamber temperature is recorded and maintained by attaching an automatic temperature recorder available as an optional accessory. For the attachment of an automatic temperature recorder, an optional recorder mounting kit is necessary.

Automatic temperature recorder	Recorder mounting kit
MTR-0621LH	MPR-S30
MTR-G04A (AC 100 to 150 V) MTR-G04C (AC 220 to 240 V)	MPR-S7

✧ Contact Sanyo sales representative or agent for the attachment of an automatic temperature recorder. For the usage of the automatic temperature recorder, refer to an instruction manual enclosed with the automatic temperature recorder.

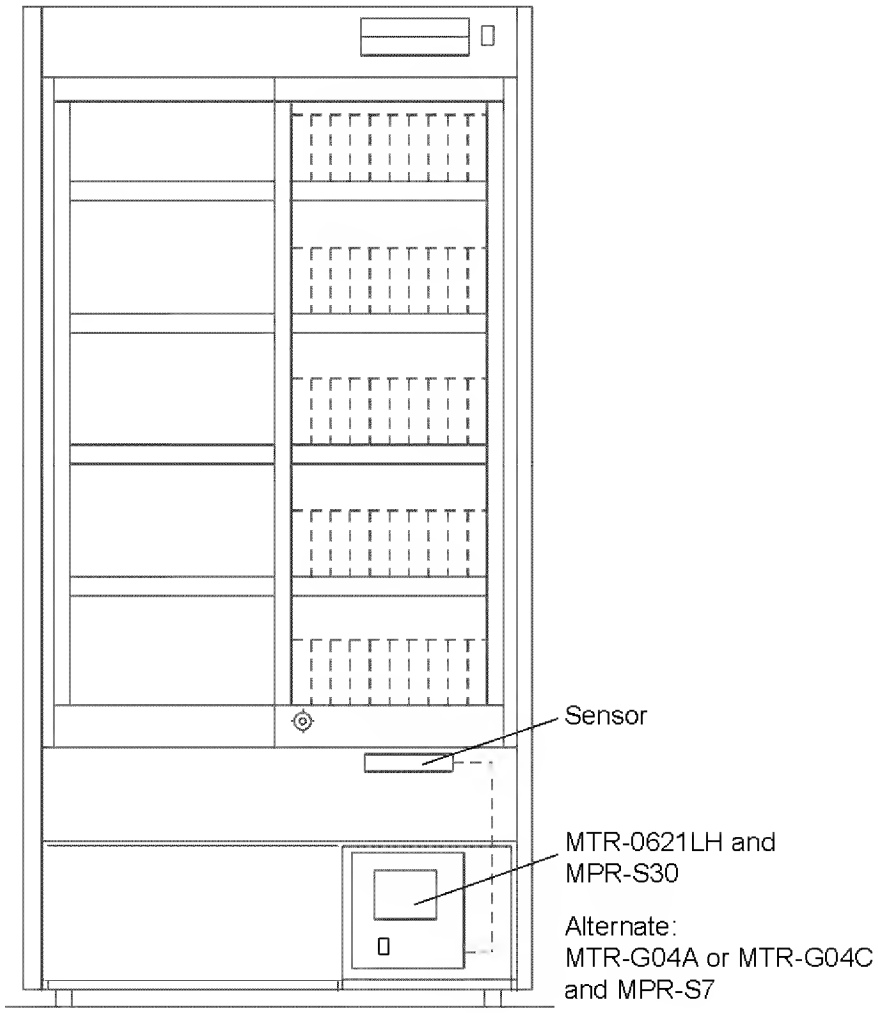

MPR-514R

✧ For MPR-514, the installation is same as for MPR-514R.

⚠ WARNING

Always disconnect the power supply plug before installing an automatic temperature recorder in order to prevent electric shock or injury.

INSTALLATION OF RECORDER

Attachment of recorder MTR-0621LH

1. Remove the bottom shelf (bottom right drawer for MPR-514R) in the chamber.
✧For MPR-514, remove the doors before taking out the bottom shelf.

2. Unscrew the screw fixing the panel cover at the space for automatic temperature recorder and open the panel cover. [Fig. 8]

3. Remove the panel cover from the shaft by pushing the shaft edge to the right and left side respectively.

4. Fix the recorder to the frame in the recorder mounting kit (MPR-S30) referring to the instruction manual enclosed with the recorder mounting kit. [Fig. 9]

5. Unscrew 2 screws on the air intake vent cover (right side) on the front bottom and then remove the air intake vent cover. [Fig. 10]
<Important>
A sensor is fixed to the back side of the air intake vent cover. Do not pull the air intake vent cover excessively.

6. Take out the insulation in the sensor port and pass the recorder sensor into the chamber through the sensor port from the space for automatic temperature recorder. [Fig. 11]

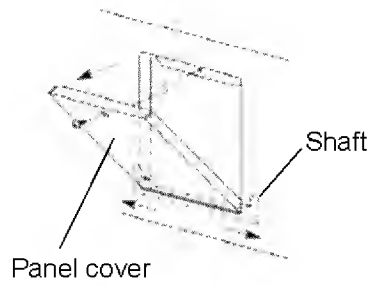

Fig. 8

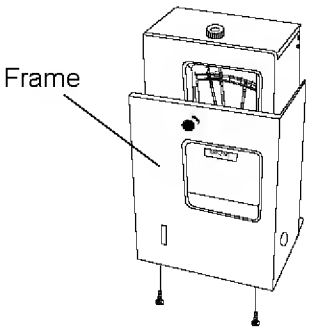

Fig. 9

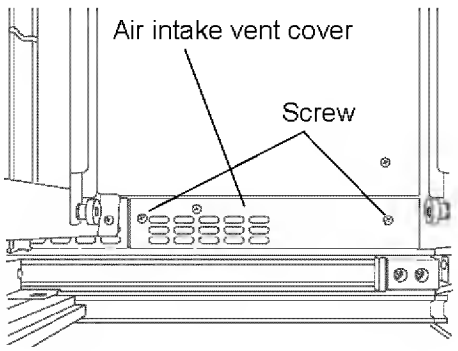

<overhead view of right chamber>
Fig. 10

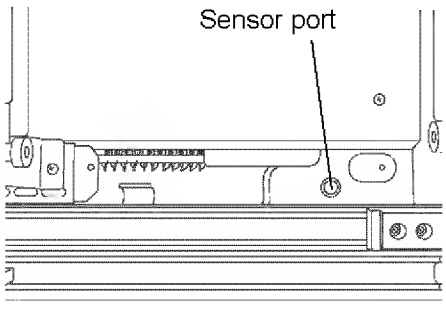

<overhead view of right chamber>
Fig. 11

INSTALLATION OF RECORDER

7. Fix the recorder sensor to the sensor fixture. [Fig. 12]

8. Replace the insulation to the sensor port and then replace and fix the air intake vent cover by 2 screws.

9. Set the automatic temperature recorder with the frame to the space for automatic temperature recorder. [Fig. 13]

10. Replace the bottom shelf (bottom right drawer for MPR-514R) in the chamber.

✧For MPR-514, replace the doors after setting the bottom shelf.

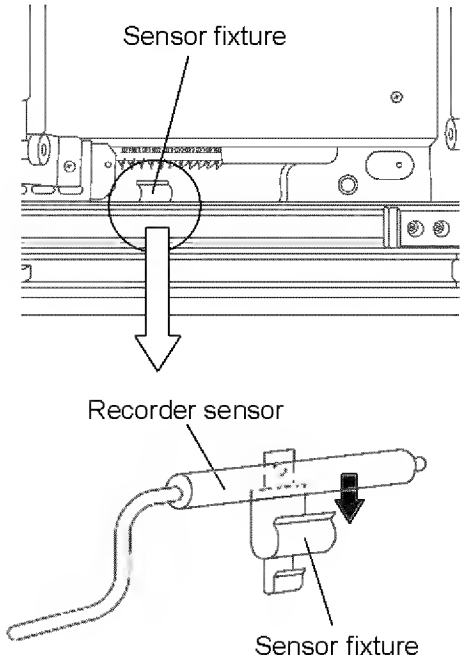

Fig. 12

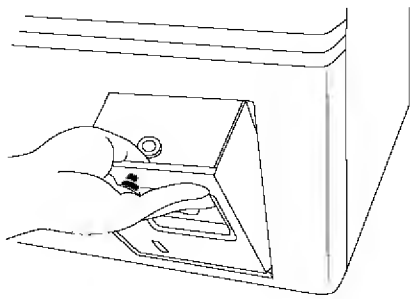

Fig. 13

INSTALLATION OF RECORDER

Attachment of recorder MTR-G04A or MTR-G04C

1. Remove the bottom shelf (bottom right drawer for MPR-514R) in the chamber.
✧For MPR-514, remove the doors before taking out the bottom shelf.

2. Unscrew the screw fixing the panel cover at the space for automatic temperature recorder and open the panel cover. [Fig. 14]

3. Remove the panel cover from the shaft by pushing the shaft edge to the right and left side respectively.

4. Fix the recorder to the recorder fitting in the recorder mounting kit (MPR-S7) referring to the instruction manual enclosed with the recorder mounting kit. [Fig. 15]

5. Unscrew 2 screws on the air intake vent cover (right side) on the front bottom and then remove the air intake vent cover. [Fig. 16]
<Important>
A sensor is fixed to the back side of the air intake vent cover. Do not pull the air intake vent cover excessively.

6. Take out the insulation in the sensor port and pass the recorder sensor into the chamber through the sensor port from the space for automatic temperature recorder. [Fig. 17]

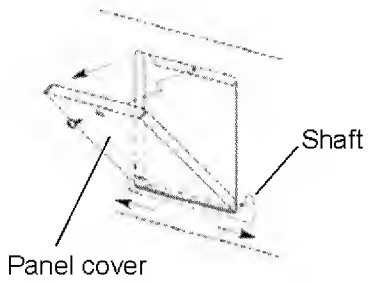

Fig. 14

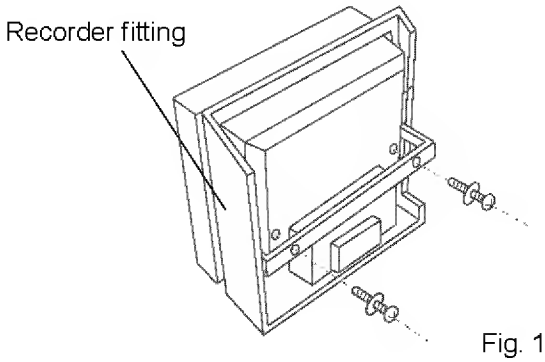

Fig. 15

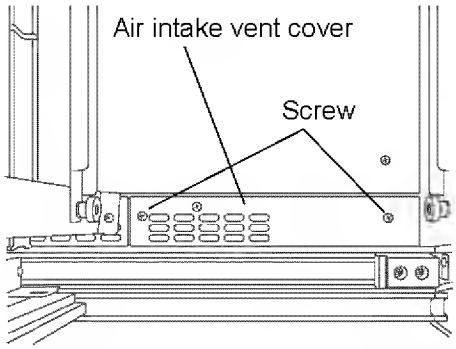

<overhead view of right chamber>
Fig. 16

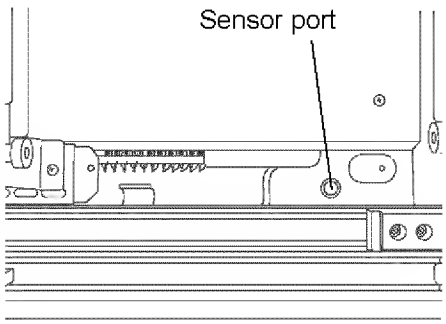

<overhead view of right chamber>
Fig. 17

INSTALLATION OF RECORDER

7. Fix the recorder sensor to the sensor fixture. [Fig. 18]

8. Replace the insulation to the sensor port and then replace and fix the air intake vent cover by 2 screws.

9. Connect the recorder connector to the connector for recorder power located at upper right inside the space for automatic temperature recorder. [Fig. 19]

✧ The connector for recorder power has a connector cover. Remove the connector cover before connection.

10. Set the automatic temperature recorder with the channel on the recorder fitting aligned with the shaft and fix the automatic temperature recorder by a screw at the space for automatic temperature recorder. [Fig. 20]

11. Replace the bottom shelf (bottom right drawer for MPR-514R) in the chamber.

✧For MPR-514, replace the doors after setting the bottom shelf.

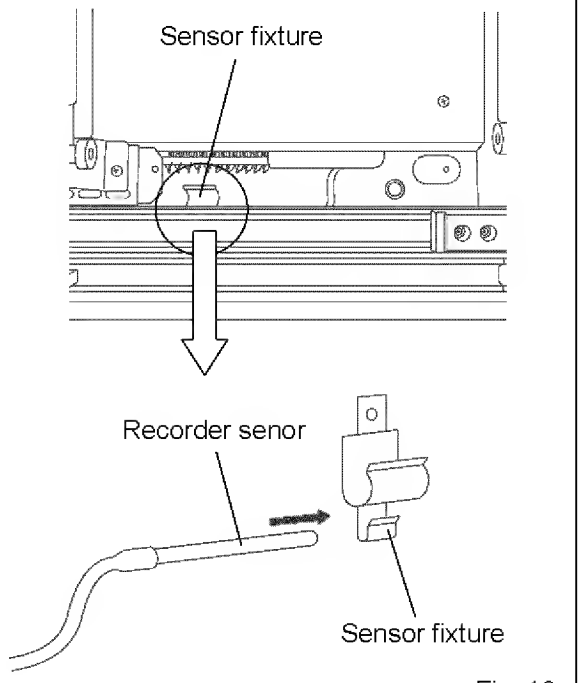

Fig. 18

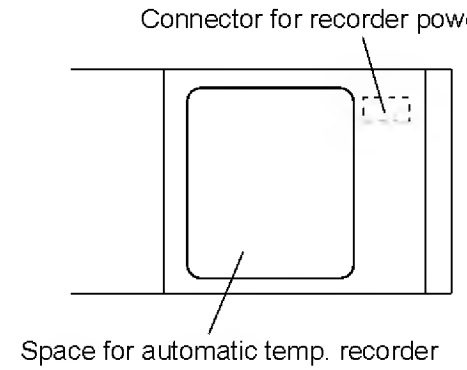

Fig. 19

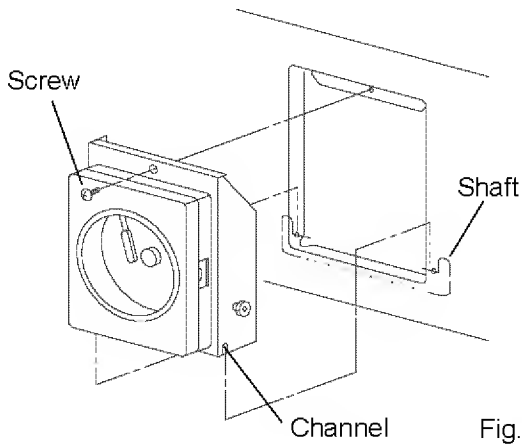

Fig. 20

BATTERY FOR POWER FAILURE ALARM

The alarm indicator blinks and the alarm buzzer sounds to notice the power failure when a battery for power failure alarm is installed. For the installation of the battery for power failure alarm, a mounting kit (MPR-48B), an optional component is necessary. A battery for power failure alarm is included in the mounting kit.

✧ Contact Sanyo sales representative or agent for the installation of the mounting kit (MPR-48B).

1. Remove the top cover on the right front of the refrigerator top by unscrewing 4 screws. [Fig. 21]

2. Release the harnesses from the clip fixed to the back side of the top cover. [Fig. 22]

3. Pass the harnesses through the bottom opening of the battery box and set the battery box on the right front of the refrigerator top so that 4 screw holes can be aligned. [Fig. 23]

✧ The battery box should be located with the battery switch faced to the refrigerator back.

4. Put the battery on the right of the battery box. [Fig. 23]

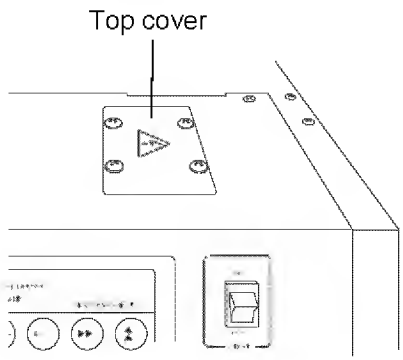

Fig. 21

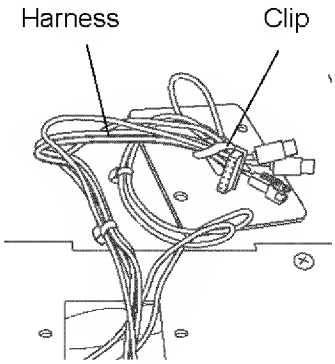

Fig. 22

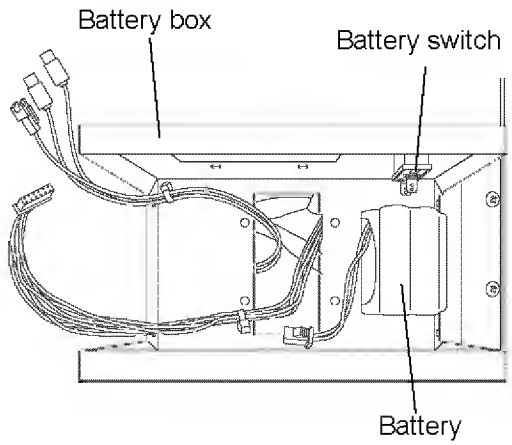

<overhead view>

Fig. 23

BATTERY FOR POWER FAILURE ALARM

5. Put the battery fixture over the battery and fix the battery box and battery fixture by 4 screws. [Fig. 24]

6. Connect the harness to the battery connector and battery switch [Fig. 25] and bind the harnesses by the clip on the battery fixture. [Fig. 24]

7. Cover the opening beside the battery switch with the top cover removed in procedure 1 (4 screws). The harness in no use is bound by the clip on the back of the top cover.

8. Put the battery box cover over the battery box and fix the battery box cover with screws (3 screws on the right and left). [Fig. 26]

9. Perform the setting for battery through the keys on the control panel of refrigerator. Refer to the procedure on the next page "Setting for battery before starting".

10. Switch on the battery switch on the battery box.

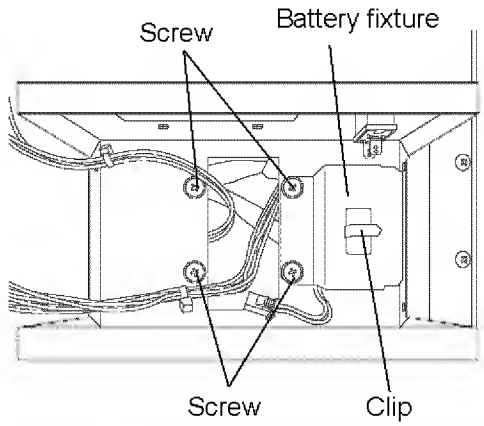

Fig. 24

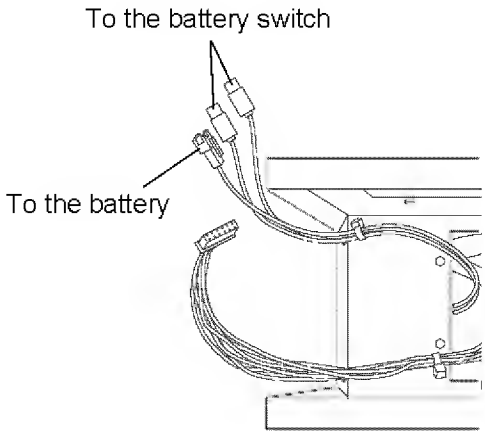

Fig. 25

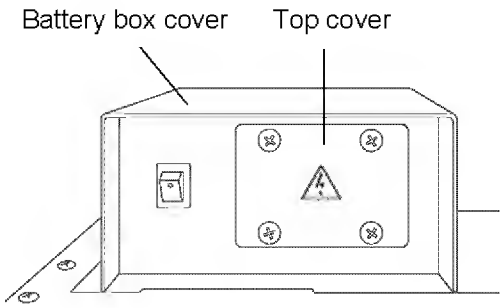

<back view>

Fig. 26

SETTING FOR BATTERY BEFORE STARTING

Always perform the setting shown below after the installation of battery for power failure alarm, an optional component (MPR-48B).

The chamber temperature and "E09" is displayed on the temperature display alternately if the battery switch is turned on without following procedure.

✧ Turn off the battery switch, perform the following setting, and turn on the battery switch again if "E09" is displayed on the temperature display.

	Description of operation	Key operated	Indication after operation
1		-----	The current chamber temperature is displayed. 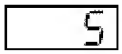
2	Press up arrow key for 5 seconds.	▲▲	F00 is displayed and the first digit blinks. 
3	Press up arrow key twice.	▲▲	The display is changed to F02 from F00. 
4	Press scroll key once.	▶▶	The second digit blinks. 
5	Press up arrow key 4 times.	▲▲	The display is changed to F42 from F02. 
6	Press set key.	SET	The current setting (000) is displayed and the first digit blinks. 
7	Press up arrow key and scroll the figure to 1.	▲▲	The display is changed to 001 from 000. 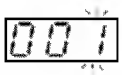
8	Press set key.	SET	The setting is memorized and the current chamber temperature is displayed. 

SPECIFICATIONS

Name	Pharmaceutical Refrigerator	
Model	MPR-514	MPR-514R
External dimensions	W900 x D600 + (58) x H1790 (mm)	
Internal dimensions	W800 x D465 x H1300 (mm)	
Effective capacity	489 L	486 L
Exterior	Painted steel	
Interior	Stainless steel	
Door	Sliding type, 2-layer pair glass with heat ray reflection film x 2	
Insulation	Rigid polyurethane foamed-in place	
Shelves	Hard steel wire on polyester coating x 5 Allowable load; 50 kg/shelf	Hard steel wire on polyester coating x 5 Allowable load; 20 kg/shelf
Drawers (MPR-514R only)	-----	Allowable load; 20 kg/drawer
Access port	Inner diameter; 30 mm, Left side	
Cooling method	Forced cool air circulation	
Compressor	Hermetic type, Output; 200 W x 1	
Fan motor	For chamber cooling; output 3 W x 1	
Evaporator	Fin and tube type	
Condenser	Wire and tube condenser + skin condenser	
Refrigerant	R-134a	
Defrosting	Cycle defrost + forced defrost, Fully automatic	
Defrost heater	148 W	
Temperature controller	Electronic control system (control range; between 2 and 14°C)	
Thermometer	Digital thermometer	
Fluorescent lamp	FL20SD x 1	
Alarms	High temp. alarm, Low temp. alarm, 0°C alarm, Air circulation alarm, Door alarm	
Remote alarm contact	During alarm buzzer and power failure, Output; N.O.; "close", N.C. "open"	
Weight	141 kg	147 kg
Accessories	1 set of key, 2 bolt-nuts 20 shelf supports, 5 shelves	1 set of key, 2 bolt-nuts 20 shelf supports, 5 shelves 5 drawers
Optional components	Automatic temperature recorder (MTR0621LH), Recorder mounting kit (MPR-S30) Automatic temperature recorder (MTR-G04A, -G04C) , Recorder mounting kit (MPR-S7) Shading door (MPR-51G), Battery kit for power failure alarm (MPR-48B)	

- Design or specifications will be subject to change without notice.
- The dimension in ( ) shows the projected dimension.

PERFORMANCE

Model	MPR-514, MPR-514R					
Temperature control range	+2°C to +14°C					
Usable ambient temperature	-5°C to +35°C					
Noise level	42 dB (A scale)					
Maximum pressure	1500 kPa					
Rated voltage	AC 110 V	AC 115 V	AC 220 V	AC 220 V	AC 230 V	AC 240 V
Rated frequency	60 Hz	60 Hz	60 Hz	50 Hz	50 Hz	50 Hz
Power consumption	240 W	240 W	240 W	215 W	220 W	220 W

- The above data is measured based on our internal basis.
- Design or specifications will be subject to change without notice.
- The unit with CE mark complies with EC directives 73/23/EEC, 89/336/EEC, and 93/68/EEC.

⚠ CAUTION

Please fill in this form before servicing.
Hand over this form to the service engineer to keep for his and your safety.

Safety check sheet

1. Refrigerator contents : ☐Yes ☐No
   Risk of infection: ☐Yes ☐No
   Risk of toxicity: ☐Yes ☐No
   Risk from radioactive sources: ☐Yes ☐No

   (List all potentially hazardous materials that have been stored in this unit.)
   Notes :

2. Contamination of the unit
   Unit interior ☐Yes ☐No
   No contamination ☐Yes ☐No
   Decontaminated ☐Yes ☐No
   Contaminated ☐Yes ☐No
   Others:

3. Instructions for safe repair/maintenance of the unit
   a) The unit is safe to work on ☐Yes ☐No
   b) There is some danger (see below) ☐Yes ☐No
   Procedure to be adhered to in order to reduce safety risk indicated in b) below.

Date :
Signature :
Address, Division :
Telephone :

Product name : Pharmaceutical Refrigerator	Model :	Serial number :	Date of Installation :

Please decontaminate the unit yourself before calling the service engineer.



SANYO Electric Co., Ltd
Printed in Japan