Operating Instructions

Hotpoint

REFRIGERATOR/FREEZER COMBINATION

GB

GB

English

RFA52P
RFA52S
RFA52T

Contents

Installation, 2-4
Positioning and connection
Door reversal

Description of the appliance, 5
Overall view

Start-up and use, 6-7
Starting the appliance
Using the refrigerator to its full potential
Using the freezer to its full potential

Maintenance and care, 8
Switching the appliance off
Cleaning the appliance
Avoiding mould and unpleasant odours
Replacing the light bulb

Precautions and tips, 9
General safety
Disposal
Respecting and conserving the environment

Troubleshooting, 10

Hotpoint Guarantee, 11

Key Contacts, 12

Hotpoint

Installation

GB

! Before placing your new appliance into operation please read these operating instructions carefully. They contain important information for safe use, for installation and for care of the appliance.

! Please keep these operating instructions for future reference. Pass them on to possible new owners of the appliance.

Positioning and connection

Positioning

1. Place the appliance in a well-ventilated humidity-free room.
2. Do not obstruct the rear fan grills. The compressor and condenser give off heat and require good ventilation to operate correctly and save energy.
3. Leave a space of at least 10 cm between the top part of the appliance and any furniture above it, and at least 5 cm between the sides and any furniture/side walls.
4. Ensure the appliance is away from any sources of heat (direct sunlight, electric stove, etc.).
5. In order to maintain the correct distance between the appliance and the wall behind it, fit the spacers supplied in the installation kit, following the instructions provided.

Levelling

1. Install the appliance on a level and rigid floor.
2. If the floor is not perfectly horizontal, adjust the refrigerator by tightening or loosening the rear feet.

Electrical connections

After the appliance has been transported, carefully place it vertically and wait at least 3 hours before connecting it to the electricity mains. Before inserting the plug into the electrical socket ensure the following:

- The appliance is earthed and the plug is compliant with the law.
- The socket can withstand the maximum power of the appliance, which is indicated on the data plate located on the bottom left side of the fridge (e.g. 150 W).
- The voltage must be in the range between the values indicated on the data plate located on the bottom left side (e.g. 220-240V).
- The socket is compatible with the plug of the appliance. If the socket is incompatible with the plug, ask an authorised technician to replace it (*see Assistance*). Do not use extension cords or multiple sockets.

! Once the appliance has been installed, the power supply cable and the electrical socket must be easily accessible.

! The cable must not be bent or compressed.

! The cable must be checked regularly and replaced by authorised technicians only (see Assistance).

! The manufacturer declines any liability should these safety measures not be observed.

Your appliance is supplied with a 13amp fused plug that can be plugged into a 13amp socket for immediate use. Before using the appliance please read the instructions below.

WARNING:
THIS APPLIANCE MUST BE EARTHED.

Replacing fuse covers:
When replacing a faulty fuse, a 13amp ASTA approved fuse to BS 1362 should always be used and the fuse cover re-fitted.
If the fuse cover is lost, the plug must not be used until a replacement is obtained.

Replacement fuse covers:
If a replacement fuse cover is fitted, it must be of the correct colour as indicated by the coloured marking or the colour that is embossed in words on the base of the plug.

Changing the plug:

Removing the plug
If your appliance has a non-rewireable moulded plug and you should wish to remove it to add a longer cable or to re-route the mains cable through partitions, units etc. please ensure that either:

- The plug is replaced by a fused 13amp re-wireable plug bearing the BSI mark of approval.

or

- The mains cable is wired directly into a 13amp cable outlet, controlled by a switch (in compliance with BS 5733) which is accessible without moving the appliance.

Disposing of the plug
Cut off and dispose of the supplied plug if it does not fit your socket. The cable should be cut as close as possible to the moulded plug.
Remove the fuse.

WARNING:
To avoid a shock hazard do not insert the discarded plug into a socket anywhere else.

Fitting a new plug

IMPORTANT:
WIRES IN THE MAINS LEAD ARE COLOURED IN ACCORDANCE WITH THE FOLLOWING CODE...

Green and Yellow - Earth
Blue - Neutral
Brown - Live

As the colours of the wires in the mains lead may not correspond with the coloured markings identifying the terminals in your plug, proceed as follows:

- Connect Green and Yellow wire to terminal marked 'E' or ⏚ or coloured Green and Yellow.
- Connect Brown wire to terminal marked 'L' or coloured red or brown.
- Connect Blue wire to terminal marked 'N' or coloured Black or Blue.

If a 13amp plug (BS 1363) is used it must be fitted with a 13amp fuse. A 15amp plug must be protected by a 15amp fuse, either in the plug or adaptor or at the distribution board.

If you are in any doubt about the electrical supply to your machine, consult a qualified electrician before use.

CE Marking certifies that this appliance conforms to the following EEC directives :
Low Voltage Equipment - 73/23/EEC & 93/68 EEC
Electromagnetic Compatibility 89/336/EEC, 92/31/EEC & 93/68/EEC

GB

DOOR REVERSAL

Warning: Before attempting to remove the doors, switch off the electrical supply and pull out the mains plug.
It is recommended that you remove any loose items/fittings from inside the appliance and place food into insulated containers whilst carrying out this operation.
You may require assistance to carefully lay the appliance onto its back onto suitable protective materials (i.e. original packaging).

Remove the doors

1. Lay down the appliance on its back.
2. Unscrew, remove and retain the bottom hinge.
3. Slightly open the bottom door and slide downward remove and carefully place to one side
4. Remove centre hinge and spacer if fitted. Slightly open the top door and slide downwards, remove and carefully place to one side.
5. Unscrew and remove the top front cover from the cabinet .
6. Unscrew and remove the hinge pin and the bolt from the top right hand and refit them into the hole in the left hand side. Refit the top front cover.
7. Use a thin blunt instrument to remove the top and bottom hinge bushes and blanking plugs from the doors, take care not to mark the door handle. Reposition the blanking plugs and bushes on the opposite side.
8. Fit the blanking plugs provided into the right hand two centre hinge holes.

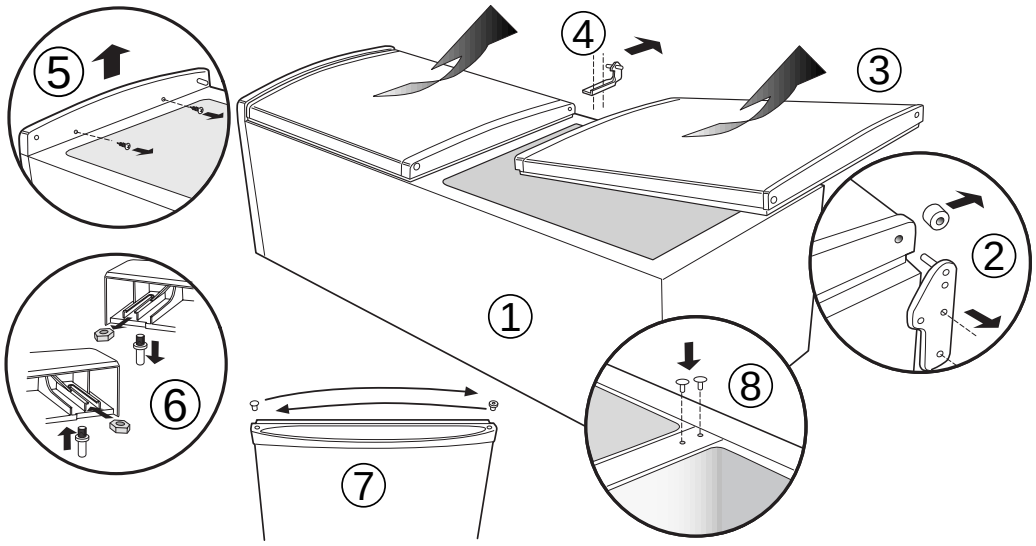

Replacing the doors

1. Slide the top door upwards and locate the top hinge pin into the door brush. Reposition the centre hinge on the opposite side.
2. Carefully slide bottom door upward into the centre hinge pin.
3. Unscrew the bottom hinge pin and refit it on the opposite side..
4. Fit the bottom hinge making sure that the door is aligned to the cabinet.
5. Carefully stand the appliance upright in it's required location and make sure it is sitting level on the floor. Open and close the doors checking that the gasket makes a good seal without any gaps when the doors are closed.

Note: Replace loose items/fittings back into the appliance and leave for at least 15 minutes before switching back on.

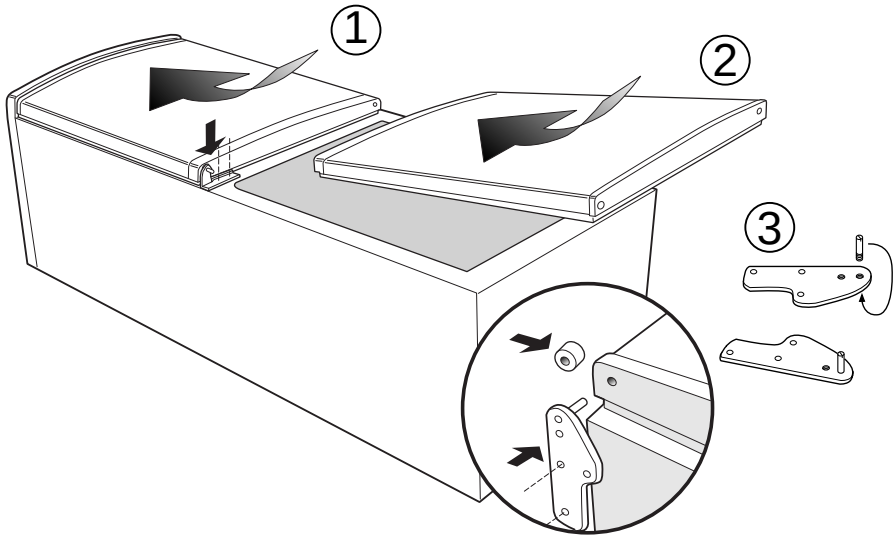

Description of the appliance

Hotpoint

GB

Overall view

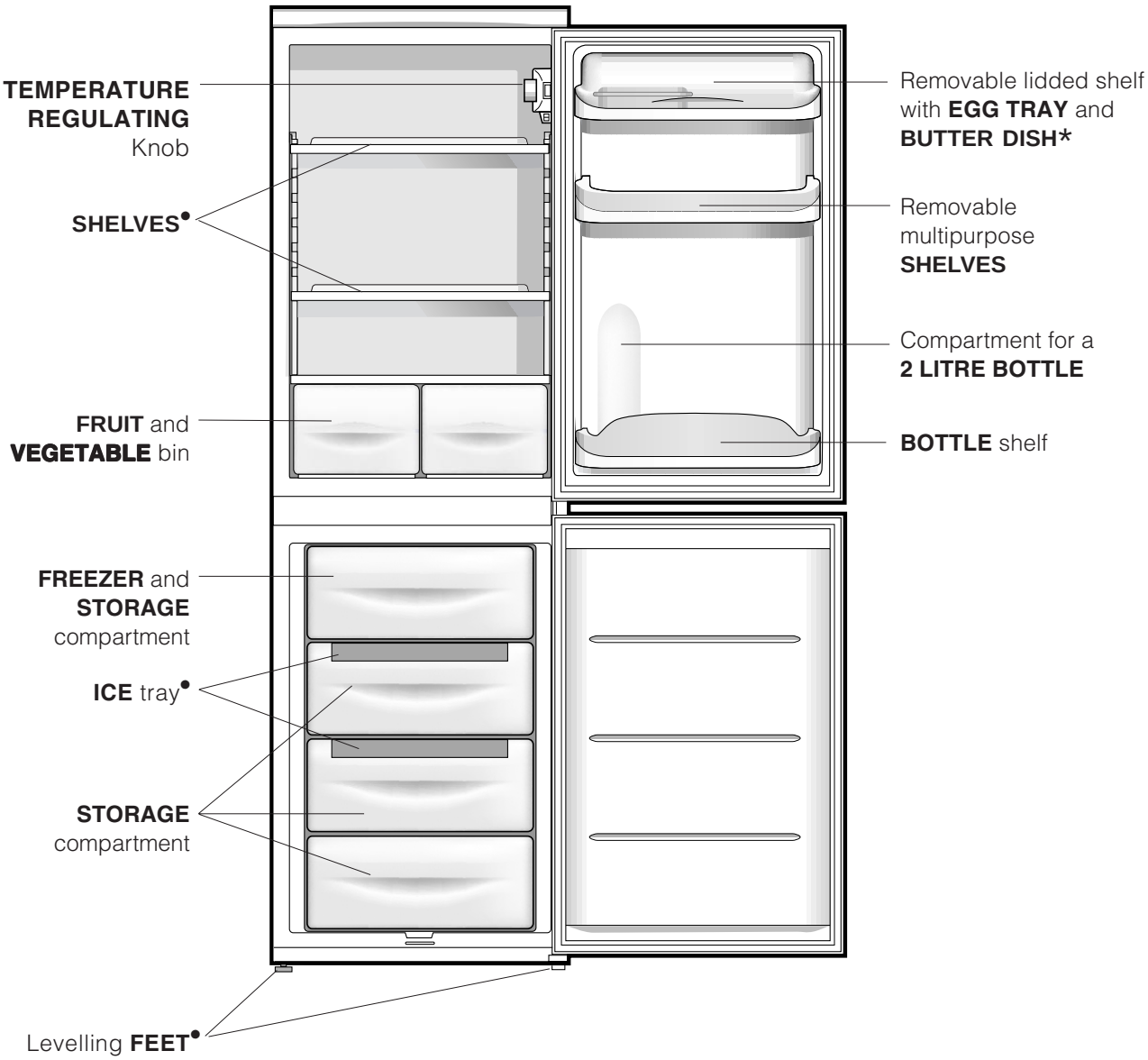

• Varies by number and/or position.
* Available only on certain models.

Start-up and use

GB

Starting the appliance

! Before starting the appliance, follow the installation instructions (*see Installation*).
! Before connecting the appliance, clean the compartments and accessories well with lukewarm water and bicarbonate.

1. Insert the plug into the socket and ensure that the internal light illuminates.
2. Turn the TEMPERATURE ADJUSTMENT knob to an average value. After a few hours you will be able to put food in the refrigerator.

Using the refrigerator to its full potential

The temperature inside the refrigerator compartment automatically adjusts itself according to the position of the thermostat knob.
1 = warmest **5** = coldest
We recommend, however, a medium position.
The cooling section of the refrigerator is located inside the back wall of the refrigerator compartment for increased space and improved aesthetics. During operation, the back wall will be covered in frost or water droplets depending on whether the compressor is operating or paused. Do not worry, the refrigerator is functioning normally.
If the TEMPERATURE ADJUSTMENT knob has been set on high values with large quantities of food and with a high ambient temperature, the appliance can operate continuously, resulting in excessive frost formation and excessive energy consumption: compensate for this by shifting the knob towards lower values (defrosting will occur automatically).
In static appliances, the air circulates in a natural way: the colder air tends to move downwards as it is heavier. The food should be stored as follows:

Food	**Arrangement inside the refrigerator**
Fresh fish and meat	Above the fruit and vegetable bins
Fresh cheese	Above the fruit and vegetable bins
Cooked food	On any shelf
Salami, bread loaf, chocolate	On any shelf
Fruit and vegetables	In the fruit and vegetable bins
Eggs	On the shelf provided
Butter and margarine	On the shelf provided
Bottles, drinks, milk	On the shelf provided

- Place only cold or lukewarm foods in the compartment, not hot foods (*see Precautions and tips*).
- Remember that cooked foods do not last longer than raw foods.
- Do not store liquids in open containers. They will increase humidity in the refrigerator and cause condensation to form.

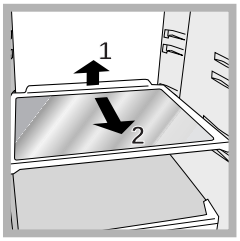

SHELVES: with or without grill. Due to the special guides the shelves are removable and the height is adjustable (*see diagram*), allowing easy storage of large containers and food. Height can be adjusted without complete removal of the shelf.

Using the freezer to its full potential

- Do not re-freeze food that is defrosting or that has already been defrosted. These foods must be cooked and eaten (within 24 hours).
- Fresh food that needs to be frozen must not come into contact with food that has already been defrosted. Fresh food must be stored above the grill in the freezer compartment and if possible be in direct contact with the walls (side and rear), where the temperature drops below -18°C and guarantees rapid freezing.
- Do not place glass bottles which contain liquids, and which are corked or hermetically sealed in the freezer because they could break.
- The maximum quantity of food that may be frozen daily is indicated on the plate containing the technical properties located on the bottom left side of the refrigerator compartment (for example: Kg/24h: 4)

! Do not open the door during freezing.
! If there is a power cut or malfunction, do not open the freezer door. This will help maintain the temperature inside the freezer, ensuring that foods are conserved for at least 9 -14 hours.
! If the room temperature drops below 14°C for an extended period of time, the ideal temperature will not be reached in the freezer compartment and food preservation will be reduced.

Fast Freeze switch
The appliance is fitted with a manual "Fast Freezer" switch.

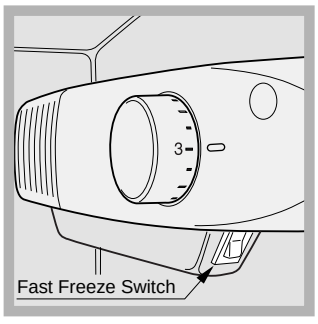

When loading fresh food to freeze switch "Fast Freeze" on.
To set "Fast Freeze" ON, press the switch to "**I**"
This switch activates intensive cooling to ensure that required temperatures are reached quickly.
So when the fresh food is frozen return the switch to its OFF position, "**0**".
Note: for Energy Saving ensure that "Fast Freeze" is switched off after 24 hours.

For the refrigerator to operate properly the "Fast Freeze" button must be ON when room temperature is 16°C or lower.

Ice tray
The fact that they are situated on the top part of the freezer drawers ensures greater cleanliness: the ice no longer comes into contact with the food placed inside the freezer compartment; furthermore, the dripping of the water during filling is avoided (a lid to cover up the hole after filling with water is also provided).

1. Pull out the tray by pushing it up.
   Check that the tray is ompletely empty and fill it with water through the opening provided.
2. Take care not to exceed the level indicated (MAX WATER LEVEL). Excess water prevents the ice cubes from dispensing (if this happens, wait for the ice to melt and empty the tray).
3. Turn the tray 90°: due to the connected compartments each mould fills with water (*see diagram*).
4. Close the opening with the lid provided and put the tray back, placing the top part in the corresponding housing and allowing it to drop in again.
5. When the ice has formed (minimum time approximately 8 hours) knock the tray against a hard surface and wet the outside so that the ice cubes come loose and take them out through the opening.

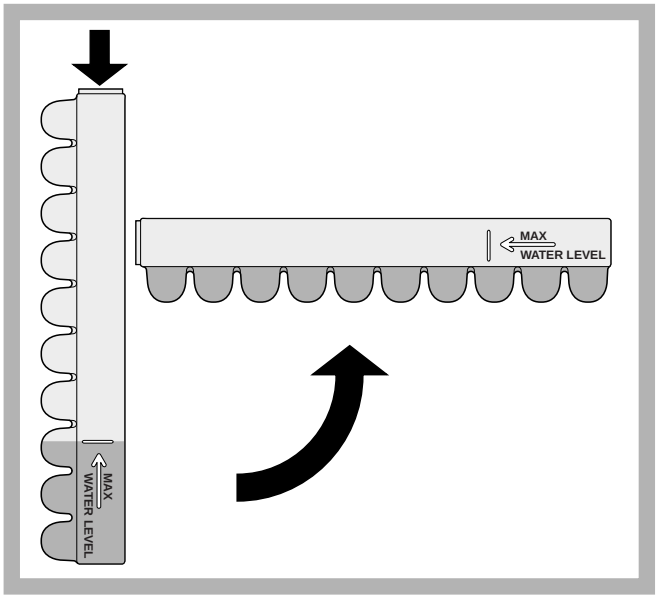

Maintenance and care

GB

Switching the appliance off

During cleaning and maintenance it is necessary to disconnect the appliance from the electricity supply:
It is not sufficient to set the temperature adjustment knobs on ● (appliance off) to eliminate all electrical contact.

Cleaning the appliance

- The external and internal parts, as well as the rubber seals may be cleaned using a sponge that has been soaked in lukewarm water and bicarbonate of soda or neutral soap. Do not use solvents, abrasive products, bleach or ammonia.
- The removable accessories may be soaked in warm water and soap or dishwashing liquid. Rinse and dry them carefully.
- The back of the appliance may collect dust which can be removed by delicately using the hose of a vacuum cleaner set on medium power. The appliance must be switched off and the plug must be pulled out before cleaning the appliance.

Avoiding mould and unpleasant odours

- The appliance is manufactured with hygienic materials which are odour free. In order to maintain an odour free refrigerator and to prevent the formation of stains, food must always be covered or sealed properly.
- If you want to switch the appliance off for an extended period of time, clean the inside and leave the doors open.

Defrosting the appliance

! Follow the instructions below.
Do not speed up the defrosting process by using any devices or tools other than the scraper provided, you may damage the refrigeration circuit.

Defrosting the refrigerator compartment

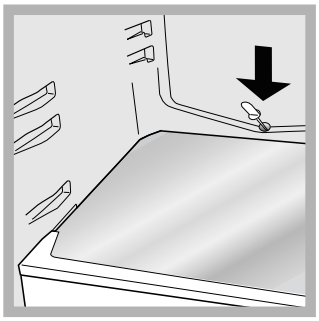

The refrigerator has an automatic defrosting function: water is ducted to the back of the appliance by a special discharge outlet (*see diagram*) where the heat produced by the compressor causes it to evaporate.

It is necessary to clean the discharge hole regularly so that the water can flow out easily.

Defrosting the freezer compartment

1. Set the TEMPERATURE ADJUSTMENT knob to the position ● .
2. Wrap frozen foods in newspaper and place them in another freezer or in a cool place.
3. Leave the door open until the frost has melted completely. This can be made easier by placing containers with lukewarm water in the freezer compartment.
4. Clean and dry the freezer compartment carefully before switching the appliance on again.

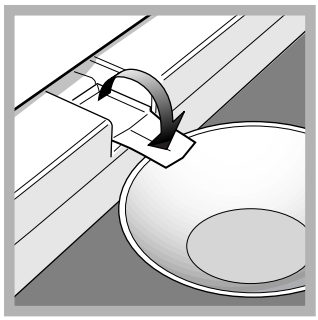

5. Certain appliances are fitted with the DRAIN SYSTEM to lead the water outside: let the water flow into a container (*see diagram*).

Replacing the light bulb

To replace the light bulb in the refrigerator compartment, pull out the plug from the electrical socket. Follow the instructions below.
Access the light bulb by removing the cover as indicated in the diagram. Replace it with a similar light bulb within the power range indicated on the cover (15W or 25W).

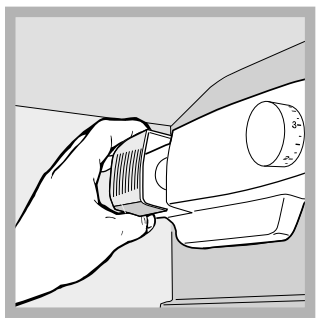

Precautions and tips

Hotpoint

GB

! The appliance was designed and manufactured in compliance with international safety standards. The following warnings are provided for safety reasons and must be read carefully.

CE This appliance complies with the following Community Directives:
- 73/23/EEC of 19/02/73 (Low Voltage) and subsequent amendments;
-89/336/EEC of 03.05.89 (Electromagnetic Compatibility) and subsequent amendments;
- 2002/96/CE..



General safety

- The appliance was designed for domestic use inside the home and is not intended for commercial or industrial use.
- The appliance must be used to store and freeze food products by adults only and according to the instructions in this manual.
- The appliance must not be installed outdoors, even in covered areas. It is extremely dangerous to leave the appliance exposed to rain and storms.
- Do not touch the appliance with bare feet or with wet or moist hands and feet.
- Do not touch the internal cooling elements: this could cause skin abrasions or frost/freezer burns.
- When unplugging the appliance always pull the plug from the mains socket, do not pull on the cable.
- Before cleaning and maintenance, always switch off the appliance and disconnect it from the electrical supply. It is not sufficient to set the temperature adjustment knobs on ● (appliance off) to eliminate all electrical contact.
- In the case of a malfunction, under no circumstances should you attempt to repair the appliance yourself. Repairs carried out by inexperienced persons may cause injury or further malfunctioning of the appliance.
- Do not use devices or tools other than the special scraper provided inside the compartments.
- Do not put ice cubes taken directly from the freezer into your mouth.
- Do not allow children to tamper with the controls or play with the appliance. Under no circumstance should they be allowed to sit on the bins or to hang from the door.
- Keep packaging material out of the reach of children! It can become a choking or suffocation hazard.

Disposal

- Observe local environmental standards when disposing packaging material for recycling purposes.
- The European Directive 2002/96/EC on Waste Electrical and Electronic Equipment (WEEE), requires that old household electrical appliances must not be disposed of in the normal unsorted municipal waste stream. Old appliances must be collected separately in order to optimise the recovery and recycling of the materials they contain and reduce the impact on human health and the environment. The crossed out “wheeled bin” symbol on the product reminds you of your obligation, that when you dispose of the appliance it must be separately collected.
Consumers may take their old appliance to public waste collection areas, other communal collection areas, or if national legislation allows return it to a retailer when purchasing a similar new product.
All major household appliance manufacturers are active in the creation of systems to manage the collection and disposal of old appliances.

Respecting and conserving the environment

- Install the appliance in a fresh and well-ventilated room. Ensure that it is protected from direct sunlight and do not place it near heat sources.
- Try to avoid keeping the door open for long periods or opening the door too frequently in order to conserve energy.
- Do not fill the appliance with too much food:
cold air must circulate freely for food to be preserved properly. If circulation is impeded, the compressor will work continuously.
- Do not place hot food directly into the refrigerator. The internal temperature will increase and force the compressor to work harder and will consume more energy.
- Defrost the appliance if ice forms (*see Maintenance*). A thick layer of ice makes cold transference to food products more difficult and results in increased energy consumption.
- Regularly check the door seals and wipe clean to ensure they are free of debris and to prevent cold air from escaping (*see Maintenance*).

Troubleshooting

GB

If the appliance does not work, before calling for Assistance (*see Assistance*), check for a solution from the following list.

Malfunctions:	Possible causes / Solutions:
The internal light does not illuminate.	• The plug has not been inserted into the electrical socket, or not far enough to make contact, or there is no power in the house.
The refrigerator and the freezer do not cool well.	• The doors do not close properly or the seals are damaged. • The doors are opened too frequently. • The TEMPERATURE ADJUSTMENT knob is not in the correct position • The refrigerator or the freezer have been over-filled.
The food inside the refrigerator is beginning to freeze.	• The TEMPERATURE ADJUSTMENT knob is not in the correct position. • The food is in contact with the back inside wall of the refrigerator.
The motor runs continuously.	• The door is not closed properly or is continuously opened. • The outside ambient temperature is very high. • The thickness of the frost exceeds 2-3 mm (*see Maintenance*).
The appliance makes a lot of noise.	• The appliance has not been installed on a level surface (*see Installation*). • The appliance has been installed between cabinets that vibrate and make noise. • The internal refrigerant makes a slight noise even when the compressor is off. This is not a defect, it is normal.
There is water at the bottom of the refrigerator.	• The water discharge hole is blocked (*see Maintenance*).

Guarantee

12 Months Parts and Labour Guarantee

Your appliance has the benefit of our manufacturer's guarantee, which covers the cost of breakdown repairs for twelve months from the date of purchase.

This gives you the reassurance that if, within that time, your appliance is proven to be defective because of either workmanship or materials, we will, at our discretion, either repair or replace the appliance at no cost to you.

This guarantee is subject to the following conditions:

- The appliance has been installed and operated correctly and in accordance with our operating and maintenance instructions.
- The appliance is used only on the electricity or gas supply printed on the rating plate.
- The appliance has been used for normal domestic purposes only.
- The appliance has not been altered, serviced, maintained, dismantled, or otherwise interfered with by any person not authorised by us.
- Any repair work must be undertaken by us or our appointed agent.
- Any parts removed during repair work or any appliance that is replaced become our property.
- The appliance is used in the United Kingdom or Republic of Ireland.

The guarantee does not cover:

- Damage resulting from transportation, improper use, neglect or interference or as a result of improper installation.
- Replacement of any consumable item or accessory . These include but are not limited to: plugs, cables, batteries, light bulbs, fluorescent tubes and starters, covers and filters.
- Replacement of any removable parts made of glass or plastic.

THIS GUARANTEE WILL NOT APPLY IF THE APPLIANCE HAS BEEN USED IN COMMERCIAL OR NON-DOMESTIC PREMISES.

5 Year Parts Guarantee

Hotpoint also offers you a free 5 year parts guarantee. This additional guarantee is conditional on you registering your appliance with us and the parts being fitted by one of our authorised engineers. There will be a charge for our engineer's time. To activate the extra parts warranty on your appliance, simply call our registration line on 0870 6092094 (ROI 01 230 0800).

Extended Guarantees

We offer a selection of repair protection plans that enable you to fully cover yourself against the expense of repair bills for the life of your policy. To find the ideal plan for you please call our advice line on 08709 088 088 (ROI 01 230 0233).

Free Helpdesk Service

We have a dedicated team who can provide free advice and assistance with your appliance if you experience any technical difficulties within the first 90 days of ownership. Simply call our Hotpoint Service Hotline on 08709 066 066 (ROI 0818 313 413) for telephone assistance, or, where necessary, to arrange for an engineer to call. If we cannot resolve the technical problem we will replace your machine or, if you prefer, give you your money back.

GB

After Sales Service

No one is better placed to care for your Hotpoint appliance during the course of its working life than us - the manufacturer.

Essential Contact Information

Hotpoint Service

We are the largest service team in Europe offering you access to 400 skilled telephone advisors and 1100 fully qualified engineers on call to ensure you receive fast, reliable, local service.

UK: 08709 066 066
Republic of Ireland: 0818 313 413
www.hotpointservice.co.uk

Please note: Our advisors will require the following information:

Model number:

Serial number:

Parts and Accessories

We supply a full range of genuine replacement parts as well as accessory products that protect and hygienically clean your appliance to keep it looking good and functioning efficiently throughout its life.

UK: 08709 077 077
Republic of Ireland: 0818 313 413
www.hotpointservice.co.uk

Appliance Registration

We want to give you additional benefits of Hotpoint ownership. To activate your free 5 year parts guarantee you must register your appliance with us.

UK: 0870 6092094
Republic of Ireland: 01 230 0800
www.hotpointservice.co.uk

Indesit Company UK Ltd. Morley Way, Peterborough, PE2 9JB
Indesit Company Unit 49 Airways Industrial Estate,Dublin 17

Recycling & Disposal Information

As part of Hotpoint's continued commitment to helping the environment, Hotpoint reserves the right to use quality, recycled components to keep down customer costs and minimise material wastage.

Please dispose of packaging and old appliances carefully. To minimise the risk of injury to children, remove the door, plug and cut the mains cable off flush with the appliance. Dispose of these parts separately to ensure that the appliance can no longer be plugged into a mains socket, and the door cannot be locked shut.