FRIGIDAIRE

All about the

Use & Care

of your Refrigerator

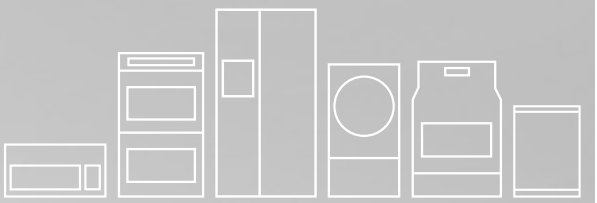

TABLE OF CONTENTS

Important Safety Instructions....2
Features at a Glance....4
Installation....5
Door Removal Instructions....7
Handle Installation....9
Connecting Water Supply....10
Controls....12
Storage Features....14
Automatic Ice & Water Dispenser....16
Changing the Filter....19
Normal Operating Sounds and Sights....21
Care and Cleaning....22
Before you Call....24
Major Appliance Warranty....27

www.frigidaire.com USA 1-800-944-9044 www.frigidaire.ca Canada 1-800-265-8352

242111904 (July 2012)

IMPORTANT SAFETY INSTRUCTIONS

WARNING

Please read all instructions before using this refrigerator.

For your Safety

- DO NOT store or use gasoline, or other flammable liquids in the vicinity of this or any other appliance. Read product labels for warnings regarding flammability and other hazards.
- DO NOT operate the refrigerator in the presence of explosive fumes.
- Avoid contact with any moving parts of automatic ice maker.
- Remove all staples from the carton. Staples can cause severe cuts, and also destroy finishes if they come in contact with other appliances or furniture.

Definitions

This is the safety alert symbol. It is used to alert you to potential personal injury hazards. Obey all safety messages that follow this symbol to avoid possible injury or death.

DANGER

DANGER indicates an imminently hazardous situation which, if not avoided, will result in death or serious injury.

WARNING

WARNING indicates a potentially hazardous situation which, if not avoided, could result in death or serious injury.

CAUTION

CAUTION indicates a potentially hazardous situation which, if not avoided, may result in minor or moderate injury.

IMPORTANT

IMPORTANT indicates installation, operation or maintenance information which is important but not hazard-related.

Installation Checklist

Doors

- ❑ Handles are secure and tight
- ❑ Door seals completely to cabinet on all sides
- ❑ Freezer door is level across the top

Leveling

- ❑ Refrigerator is level, side-to-side and tilted ¼" (6mm) front-to-back
- ❑ Toe grille is properly attached to refrigerator
- ❑ Cabinet is setting solid on all corners

Electrical Power

- ❑ House power turned on
- ❑ Refrigerator plugged in

Ice Maker

- ❑ House water supply connected to refrigerator
- ❑ No water leaks present at all connections - recheck in 24 hours
- ❑ Ice maker is turned ON
- ❑ Ice & water dispenser operates correctly
- ❑ Front filter must be flush with filter housing (select models)

Final Checks

- ❑ Shipping material removed
- ❑ Fresh food and freezer temperatures set
- ❑ Crisper humidity controls set
- ❑ Registration card sent in

Child Safety

Destroy or recycle the carton, plastic bags, and any exterior wrapping material immediately after the refrigerator is unpacked. Children should **NEVER** use these items to play. Cartons covered with rugs, bedspreads, plastic sheets or stretch wrap may become airtight chambers, and can quickly cause suffocation.

Proper Disposal of your Refrigerator or Freezer

Risk of child entrapment

Child entrapment and suffocation are not problems of the past. Junked or abandoned refrigerators or freezers are still dangerous – even if they will sit for "just a few days". If you are getting rid of your old refrigerator or freezer, please follow the instructions below to help prevent accidents.

Proper Disposal of Refrigerators/Freezers

We strongly encourage responsible appliance recycling/disposal methods. Check with your utility company or visit www.energystar.gov/recycle for more information on recycling your old refrigerator.

Before you throw away your old refrigerator/freezer:

- Remove doors.
- Leave shelves in place so children may not easily climb inside.
- Have refrigerant removed by a qualified service technician.

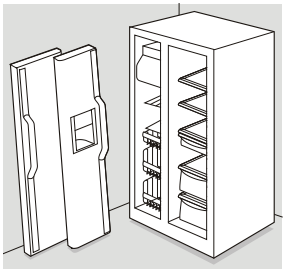

WARNING

These guidelines must be followed to ensure that safety mechanisms in this refrigerator will operate properly.

Electrical information

- **The refrigerator must be plugged into its own dedicated 115 Volt, 60 Hz., 15 Amp, AC only electrical outlet.** The power cord of the appliance is equipped with a three-prong grounding plug for your protection against electrical shock hazards. It must be plugged directly into a properly grounded three prong receptacle. The receptacle must be installed in accordance with local codes and ordinances. Consult a qualified electrician. Avoid connecting refrigerator to a Ground Fault Interrupter (GFI) circuit. **Do not use an extension cord or adapter plug.**
- If the power cord is damaged, it should be replaced by an authorized service technician to prevent any risk.
- Never unplug the refrigerator by pulling on the power cord. Always grip the plug firmly, and pull straight out from the receptacle to prevent damaging the power cord.
- Unplug the refrigerator before cleaning and before replacing a light bulb to avoid electrical shock.
- Performance may be affected if the voltage varies by 10% or more. Operating the refrigerator with insufficient power can damage the compressor. Such damage is not covered under your warranty.
- Do not plug the unit into an electrical outlet controlled by a wall switch or pull cord to prevent the refrigerator from being turned off accidentally.

IMPORTANT

Pressing and holding the **On/Off** button for three seconds, located on the temperature control panel (Electronic controls), or turning the Freezer and Fresh Food controls to "**0**" (Mechanical controls) will disable your refrigerator's cooling system, but does not disconnect the power to the light bulb and other electrical components. To turn off power to your refrigerator you must unplug the power cord from the electrical outlet.

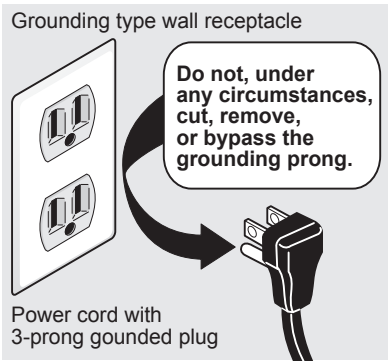

CAUTION

To avoid personal injury or property damage, handle tempered glass shelves carefully. Shelves may break suddenly if nicked, scratched, or exposed to sudden temperature change.

FEATURES AT A GLANCE

Features may vary according to model

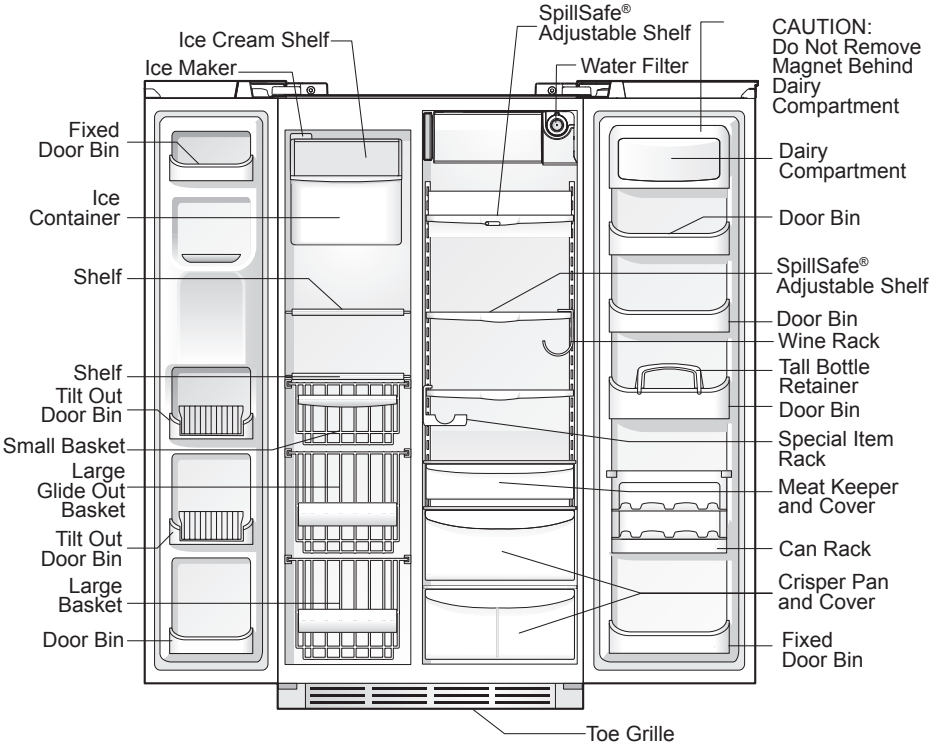

IMPORTANT

Features not included with your refrigerator can be purchased at www.frigidaire.com or by calling 1-800-944-9044.

This Use & Care Guide provides general operating instructions for your model. Use the refrigerator only as instructed in this Use & Care Guide. **Before starting the refrigerator, follow these important first steps.**

Location

- Choose a place that is near a grounded electrical outlet. **Do Not** use an extension cord or an adapter plug.
- If possible, place the refrigerator out of direct sunlight and away from the range, dishwasher or other heat sources.
- The refrigerator must be installed on a floor that is level and strong enough to support a fully loaded refrigerator.
- Consider water supply availability for models equipped with an automatic ice maker. If you do not hook up water to the refrigerator, remember to turn the ice maker off.

CAUTION

Do Not install the refrigerator where the temperature will drop below 55°F (13°C) or rise above 110°F (43°C). The compressor will not be able to maintain proper temperatures inside the refrigerator.

Do Not block the toe grille on the lower front of your refrigerator. Sufficient air circulation is essential for the proper operation of your refrigerator.

Installation

Installation clearances

- Allow the following clearances for ease of installation, proper air circulation, and plumbing and electrical connections:

Sides & Top	$^3/_8$ inch
Back	1 inch

NOTE

If your refrigerator is placed with the door hinge side against a wall, you may have to allow additional space so the door can be opened wider.

Toe Grille Installation and Removal

To install toe grille

1. Open both doors. Slide left and right sides of toe grille over lower hinges of refrigerator.
2. While pushing toe grille firmly against cabinet, fasten bottom clips of toe grille to cabinet.
3. Fasten top clips to cabinet.
4. Close the doors. Fasten right and left side clips into groove of bottom hinge.

Installing Toe Grille

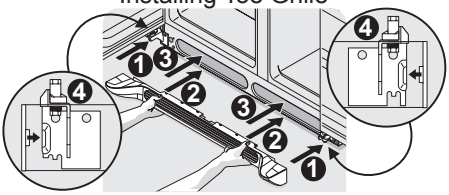

To remove toe grille

1. With both doors closed, unfasten right and left side clips of toe grille from bottom hinge groove.
2. Open both doors. Press firmly on top of toe grille until top of toe grille pops off.
3. Pull toe grille outward toward your body and off of lower hinges.

Removing Toe Grille

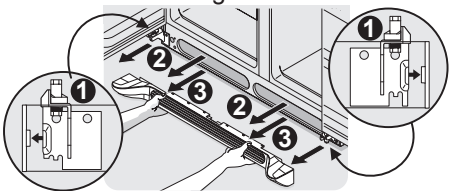

INSTALLATION

Door Opening

NOTE

The refrigerator doors are designed to shut by themselves within a 20 degree opening.

Your refrigerator should be positioned to allow easy access to a counter or table when removing food. For best use of drawers and freezer baskets, the refrigerator should be in a position where both the refrigerator and freezer doors can be fully opened.

Guidelines for final positioning of your refrigerator:

- All four corners of the cabinet must rest firmly on the floor.
- The cabinet should be level at the front and rear.
- The sides should tilt ¼ inch (6 mm) from front to back (to ensure that doors close and seal properly).
- Doors should align with each other and be level.

All of these conditions can be met by raising or lowering the adjustable front rollers.

To level the cabinet using the front rollers:

1. Open both doors and remove the toe grille (see "**Toe Grille Installation and Removal**" in the "**Installation"** section).
2. Close the doors and use a flat-blade screwdriver or $^{3}/_{8}$ inch socket wrench to raise or lower the front rollers.
3. Ensure both doors are bind-free with their seals touching the cabinet on all four sides.

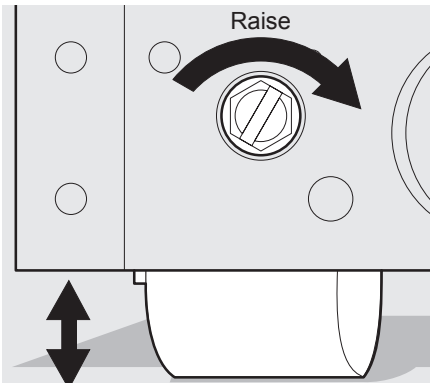

To level the doors using the adjustable lower hinge (some models):

1. Before leveling either door, remove set screw that locks door height into position. (The door cannot be adjusted without set screw removed).
2. If the refrigerator door is lower than the freezer door, raise the refrigerator door by turning the adjustment screw clockwise using a $^{7}/_{16}$ inch wrench. (See illustration.)
3. If the freezer door is lower than the refrigerator door, raise the freezer door by turning the adjustment screw clockwise using a $^{7}/_{16}$ inch wrench. (See illustration.)

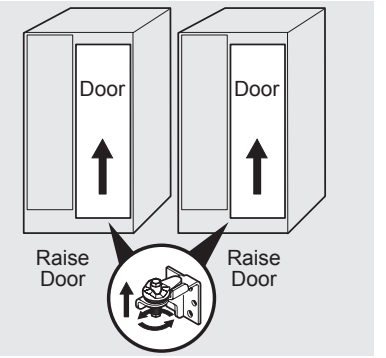

4. After leveling, verify door stop contacts lower hinge and top of door does not contact upper hinge through full movement of door (from fully closed to fully open).
5. Reinstall set screw, locking the door height.

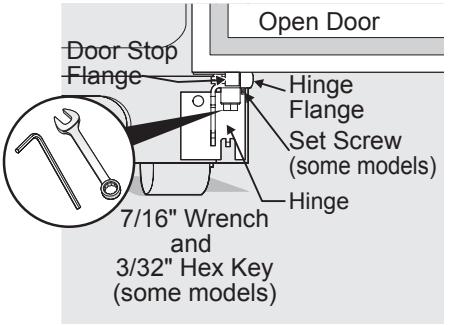

6. Replace the toe grille by fitting it into place (see "Toe Grille Installation and Removal" in the "Installation" section).

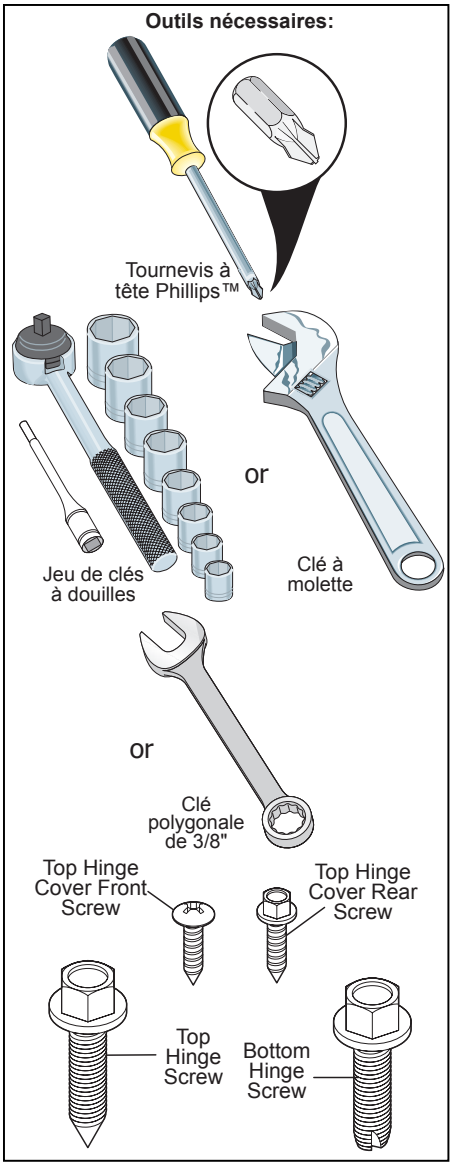

Getting through narrow spaces

If your refrigerator will not fit through an entrance area, you can reduce its size by removing the doors. Check first by measuring the entrance.

To prepare for removing the doors:

1. Make sure the electrical power cord is unplugged from the wall outlet.
2. Open both doors and remove the toe grille (as explained in the Installation Instructions that came with your appliance).
3. Remove any food from the door shelves.
4. Close the doors.

To remove the refrigerator top hinge cover:

1. Remove the three screws from each cover over the top door hinges.
2. Lift hinge cover straight up and off.

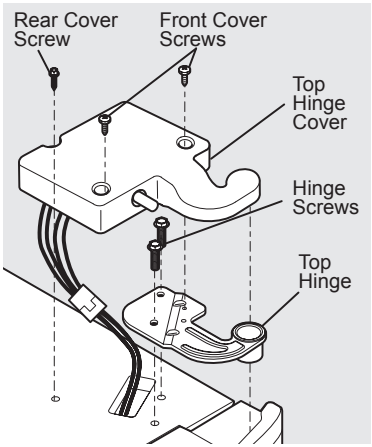

To remove the refrigerator door:

1. Trace lightly around the door's top hinge with a pencil. This makes reinstallation easier.

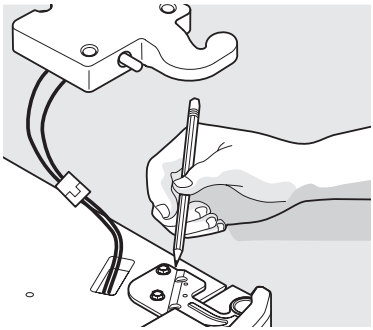

2. Remove the two screws from the top hinge. Lift the door off of the bottom hinge and set it aside.

DOOR REMOVAL INSTRUCTIONS

3 Remove the two bottom hinge screws and hinge if necessary.

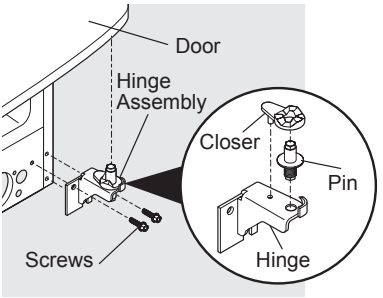

Adjustable Hinge (some models)

To reinstall the refrigerator door, reverse the above steps.

To remove the freezer top hinge cover:

1 Remove the two screws from each cover over the top door hinges.

2 Lift hinge cover straight up and off.

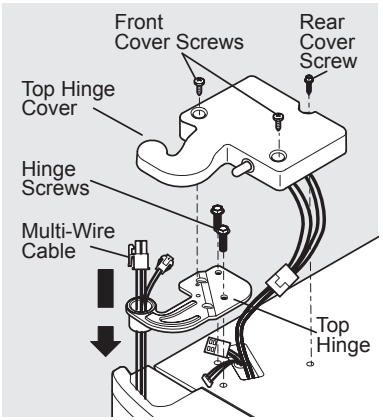

To remove the freezer door:

1 Detach the multi-wire cable connector located above the top hinge. Grasp both sides of the connector firmly and pull apart.

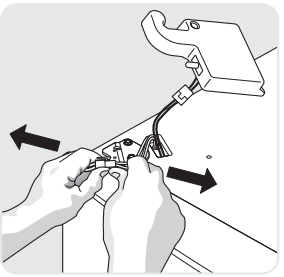

2 Trace lightly around the hinge with a pencil. This makes reinstallation easier.

3 Detach the water tube from the connector located below the freezer door. The connector releases when you press its outer sleeve inward.

4 Remove the screws from the top hinge and pull the multi-wire cable through it. Lift the door off of the bottom hinge.

5 Remove the two bottom hinge screws and hinge if necessary.

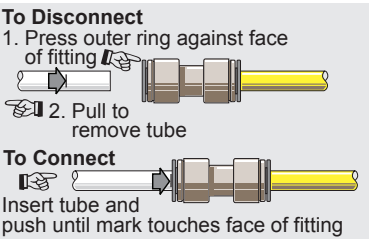

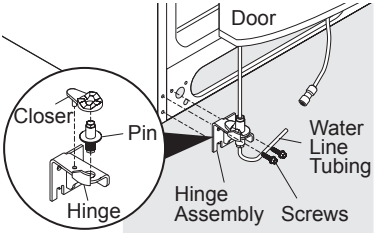

Adjustable Hinge (some models)

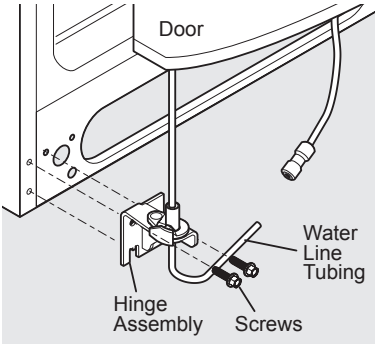

Non-Adjusting Hinge (some models)

6 Lay the door on its side to avoid damage to the water tube extending from the bottom hinge.

To reinstall the freezer door, reverse the above steps.

CAUTION

Be sure doors are set aside in a secure position where they cannot fall and cause personal injury.

HANDLE INSTALLATION

CAUTION

Wear gloves and safety goggles and use extreme CAUTION when installing these handles. The rounded end of the handles may be sharp (some models).

IMPORTANT

To ensure proper installation of handles, please review these instructions and illustrations thoroughly prior to installing the handles.

1. Remove handles from carton and any other protective packaging.
2. Position freezer handle end caps over upper and lower pre-installed shoulder bolts (A) that are fastened into door, ensuring the holes for the set screws are facing towards the refrigerator door.
3. While holding handle firmly against door, fasten upper and lower Allen set screws (B) with supplied Allen wrench.
4. Repeat steps 2 and 3 to install refrigerator handle. Ensure the holes for the set screws are facing towards the freezer door.

NOTE

All set screws should be tightened and sub-flush (Allen set screw should be seated just below the surface of the end cap) of handle end cap. The end caps should be drawn tight to freezer and refrigerator doors with no gaps.

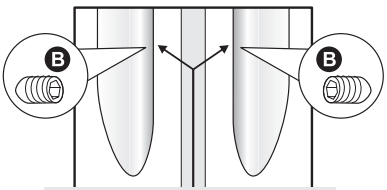

Ensure Handle Set Screws are Facing Each Other with Doors Closed

Frigidaire Professional®

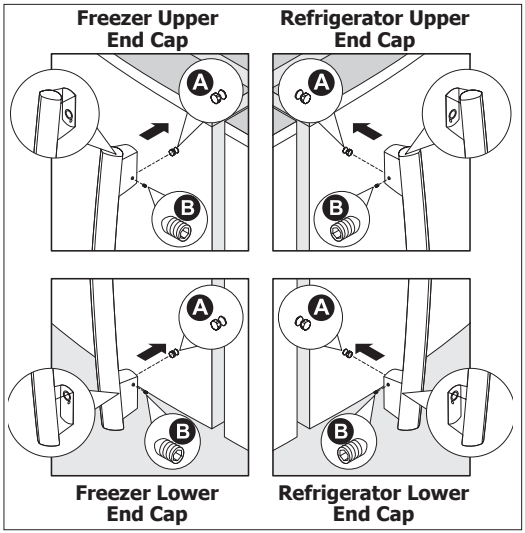

Frigidaire Gallery®

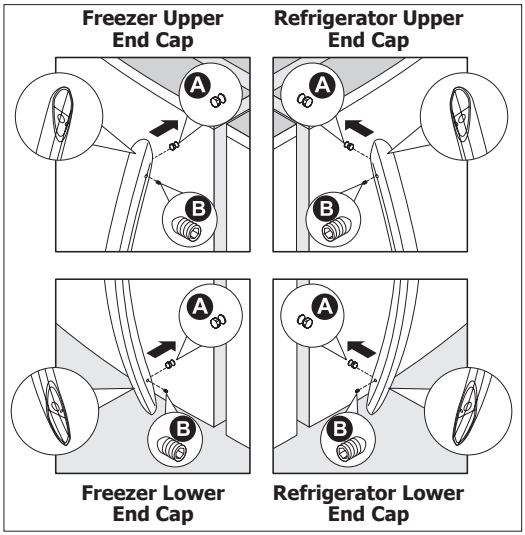

CONNECTING THE WATER SUPPLY

WARNING

To avoid electric shock, which can cause death or severe personal injury, disconnect the refrigerator from electrical power before connecting a water supply line to the refrigerator.

CAUTION

To Avoid Property Damage:

- Copper or Stainless Steel braided tubing is recommended for the water supply line. Water supply tubing made of ¼ inch plastic is not recommended to be used. Plastic tubing greatly increases the potential for water leaks, and the manufacturer will not be responsible for any damage if plastic tubing is used for the supply line.
- DO NOT install water supply tubing in areas where temperatures fall below freezing.
- Chemicals from a malfunctioning softener can damage the ice maker. If the ice maker is connected to soft water, ensure that the softener is maintained and working properly.

IMPORTANT

Ensure that your water supply line connections comply with all local plumbing codes.

Before Installing The Water Supply Line, You Will Need:

- Basic Tools: adjustable wrench, flat-blade screwdriver, and Phillips™ screwdriver
- Access to a household cold water line with water pressure between 30 and 100 psi.
- A water supply line made of ¼ inch (6.4mm) OD, copper or stainless steel tubing. To determine the length of tubing needed, measure the distance from the ice maker inlet valve at the back of the refrigerator to your cold water pipe. Then add approximately 7 feet (2.1 meters), so the refrigerator can be moved out for cleaning (as shown).
- A shutoff valve to connect the water supply line to your household water system. Do not use a self-piercing type shutoff valve.
- Do not re-use compression fitting or use thread seal tape.
- A compression nut and ferrule (sleeve) for connecting a copper water supply line to the ice maker inlet valve.

NOTE

Check with your local building authority for recommendations on water lines and associated materials prior to installing your new refrigerator. Depending on your local/ state building codes, Frigidaire recommends for homes with existing valves its Smart Choice® water line kit 5305513409 (with a 6 ft. Stainless Steel Water Line) and for homes without an existing valve, Frigidaire recommends its Smart Choice® water line kit 5305510264 (with a 20 ft. copper water line with self-tapping saddle valve). Please refer to www.frigidaire.com/store for more information.

To Connect Water Supply Line To Ice Maker Inlet Valve

1. Disconnect refrigerator from electric power source.
2. Place end of water supply line into sink or bucket. Turn ON water supply and flush supply line until water is clear. Turn OFF water supply at shutoff valve.
3. Remove plastic cap from water valve inlet and discard cap.
4. **If you use copper tubing** - Slide brass compression nut, then ferrule (sleeve) onto water supply line. Push water supply line into water valve inlet as far as it will go (¼ inch/6.4 mm). Slide ferrule (sleeve) into valve inlet and finger tighten compression nut onto valve. Tighten another half turn with a wrench; DO NOT over tighten. See Figure 1.

   If you use stainless steel tubing - The nut and ferrule are already assembled on the tubing. Slide compression nut onto valve inlet and finger tighten compression nut onto valve. Tighten another half turn with a wrench; DO NOT over tighten. See Figure 2.

5 With steel clamp and screw, secure water supply line (copper tubing only) to rear panel of refrigerator as shown.

6 Coil excess water supply line (copper tubing only), about 2½ turns, behind refrigerator as shown and arrange coils so they do not vibrate or wear against any other surface.

7 Turn ON water supply at shutoff valve and tighten any connections that leak.

8 Reconnect refrigerator to electrical power source.

9 To turn ice maker on, lower wire signal arm (side mounted) or set the ice maker's On/Off power switch to the "**I**" position (rear mounted).

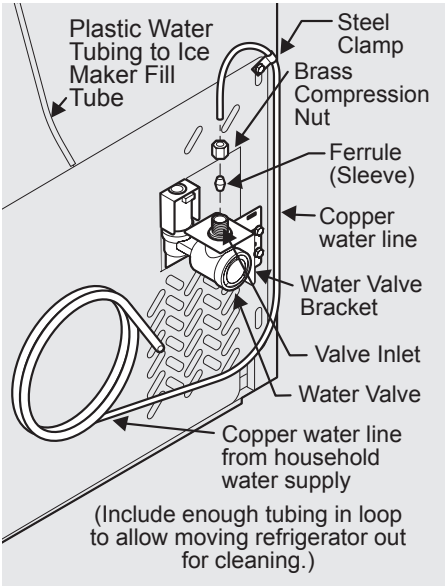

Figure 1

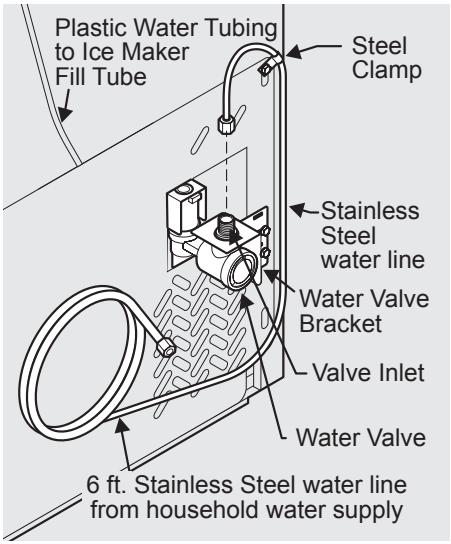

Figure 2

IMPORTANT

After connecting the water supply, refer to "How to Prime the Water Supply System" for important information about priming an empty water supply system.

Your refrigerator's water supply system includes several tubing lines, a water filter, a water valve, and a water tank. To ensure that your water dispenser works properly, this system must be completely filled with water when your refrigerator is first connected to the household water supply line.

CONTROLS

Express-Select®

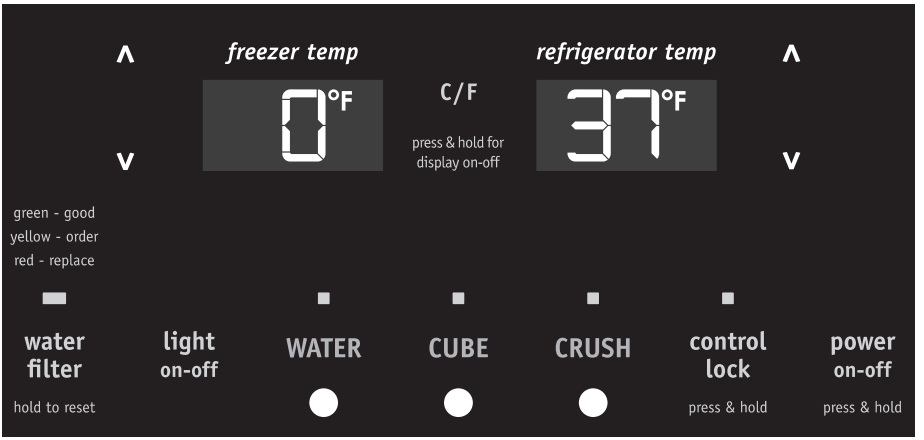

User Interface

Your refrigerator is equipped with a user interface display.

Touch an icon (**Water/Cube/Crush**) to activate the desired dispenser mode.

light on-off **On / Off**

control lock Press and hold for three seconds to activate and deactivate. This restricts undesired changes to the refrigerator's settings and prevents use of the ice and water dispenser.

water filter Touch to display filter condition status. Press and hold for three seconds to reset.

C/F Touch to toggle display from **Fahrenheit** to **Celsius**. Press and hold for three seconds for display **on-off**. When active, it allows the display of the freezer and fridge temps.

power on-off Press and hold for three seconds to turn off the cooling system to clean the refrigerator. It also turns off all dispenser functions. The temperature display will read **OFF**.

IMPORTANT

Pressing the **power off** icon does not turn off power to your refrigerator. You must unplug the power cord from the wall outlet.

Setting Cooling Temperatures

Press the ∧ or ∨ indicator to adjust the temperature to the desired setting. The temperature display will begin to blink with the first touch. After five seconds of inactivity, the display will beep to accept the new temperature.

Sabbath Mode

The Sabbath Mode is a feature that disables portions of the refrigerator and its controls in accordance with observance of the weekly Sabbath and religious holidays within the Orthodox Jewish community.

Sabbath Mode is turned ON and OFF by pressing and holding "∨" on freezer temp and "∧" on refrigerator temp for five seconds. The display shows "Sb" while in Sabbath mode.

In the Sabbath Mode, the High Temp alarm is active for health reasons. If a high temperature alarm is activated during this time, for example due to a door left ajar, the alarm will sound intermittently for about 10 minutes. The alarm will then silence on its own and a red high temperature icon will display. The high temp icon will continue to display, even if the door is closed, until the Sabbath mode is exited and the icon reset. The refrigerator will function normally once the door is closed, without any violation of the Sabbath/Holidays.

For further assistance, guidelines for proper usage and a complete list of models with the Sabbath feature, please visit the web at **http:\\www.star-k.org**.

NOTE

Although you have entered the Sabbath mode, the ice maker will complete the cycle it had already initiated. The ice cube compartment will remain cold and new ice cubes can be made with standard trays.

Express-Select®

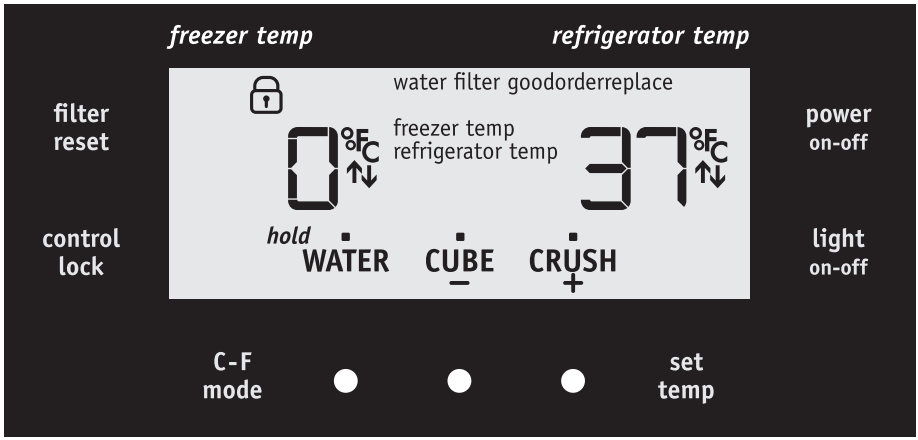

User Interface

Your refrigerator is equipped with a user interface display. It is only necessary to touch the glass. There is no need to press with force.

Touch an icon (**Water**/**Cube**/**Crush**) to activate the desired dispenser mode.

light on-off **On / Off**

control lock Press and hold for three seconds to activate and deactivate. The Lock icon will be displayed in the LCD window. This restricts undesired changes to the refrigerator's settings and prevents use of the ice and water dispenser.

filter reset Touch to display filter condition status. Press and hold for three seconds to reset.

C/F Touch to toggle display from **Fahrenheit** to **Celsius**.

power on-off Press and hold for three seconds to turn off the cooling system to clean the refrigerator. It also turns off all dispenser functions. The temperature display will read **OFF**.

IMPORTANT

Pressing the **power off** icon does not turn off power to your refrigerator. You must unplug the power cord from the wall outlet.

Setting Cooling Temperatures

Press **set temp** to choose which compartment, refrigerator or freezer, to adjust. The temperature display will begin to blink with the first touch. Touch button next to + or - to adjust the temperature to the desired setting. After five seconds of inactivity, the display will beep to accept the new temperature.

Sabbath Mode

The Sabbath Mode is a feature that disables portions of the refrigerator and its controls in accordance with observance of the weekly Sabbath and religious holidays within the Orthodox Jewish community.

Sabbath Mode is turned ON and OFF by pressing and holding power on-off and control lock for five seconds. The display shows "Sb" while in Sabbath mode.

In the Sabbath Mode, the High Temp alarm is active for health reasons. If a high temperature alarm is activated during this time, for example due to a door left ajar, the alarm will sound intermittently for about 10 minutes. The alarm will then silence on its own and a red high temperature icon will display. The high temp icon will continue to display, even if the door is closed, until the Sabbath mode is exited and the icon reset. The refrigerator will function normally once the door is closed, without any violation of the Sabbath/Holidays.

For further assistance, guidelines for proper usage and a complete list of models with the Sabbath feature, please visit the web at **http:\\www.star-k.org**.

NOTE

Although you have entered the Sabbath mode, the ice maker will complete the cycle it had already initiated. The ice cube compartment will remain cold and new ice cubes can be made with standard trays.

STORAGE FEATURES

CAUTION

To avoid personal injury or property damage, handle tempered glass shelves carefully. Shelves may break suddenly if nicked, scratched, or exposed to sudden temperature change. Allow the glass shelves to stabilize to room temperature before cleaning. Do not wash in dishwasher.

Cantilever Shelf Adjustment

Refrigerator shelves are easily adjusted to suit individual needs. Before adjusting the shelves, remove all food. Cantilever shelves are supported at the back of the refrigerator.

To adjust cantilever shelves:

1. Lift front edge up.
2. Pull shelf out.

Replace the shelf by inserting the hooks at rear of the shelf into the wall bracket. Lower the shelf into the desired slots and lock into position.

SpillSafe™ glass shelves (some models) catch and hold accidental spills. In some models, the **SpillSafe™** shelves slide out for easy access to food and for fast cleaning. The shelves slide out independently of their mounting brackets. Just pull the front of the shelf forward. Shelves can be extended as far as the stopper will allow but are not removable from their mounting brackets.

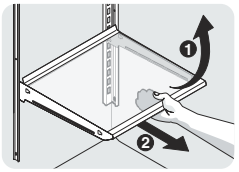

Cantilever Glass Shelf

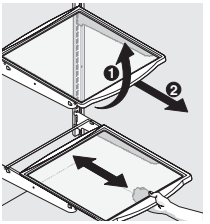

Cantilever Sliding Glass Shelf

Door storage

Door bins and shelves are provided for convenient storage of jars, bottles, and cans. Frequently used items can be quickly selected.

Some models have door bins that can accommodate gallon-sized plastic drink containers and economy-sized jars and containers. Some bins are adjustable for maximum storage capacity.

The dairy compartment, which is warmer than the general food storage section, is intended for short term storage of cheese, spreads, or butter.

Fresh Drawers with Humidity Control (some models)

The fresh drawers, located under the bottom refrigerator shelf, are designed for storing fruits, vegetables, and other fresh produce. The fresh drawers feature humidity control which allows you to adjust the humidity within the drawer. This can extend the life of fresh vegetables that keep best in high humidity. Wash items in clear water and remove excess water before placing them in the crispers. Items with strong odors or high moisture content should be wrapped before storing.

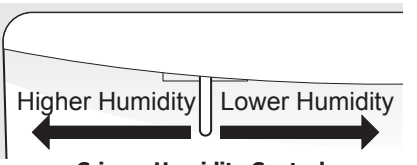

Crisper Humidity Control

NOTE

Leafy vegetables keep best when stored with the humidity control set on **Higher Humidity**, or in a drawer without a Humidity Control. This keeps incoming air to a minimum and maintains maximum moisture content.

Crispers

Crispers allow you the flexibility to store any manner of items including fruits, vegetables, nuts, etc. Crispers do not feature humidity controls.

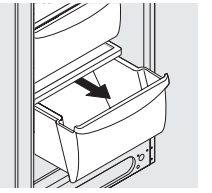

Crisper Drawer

Cool Drawer (some models)

Some models are equipped with a Cool Drawer for storage of luncheon meats, spreads, cheeses, and other deli items. This drawer does not have a separate temperature control.

Chill Drawer (some models)

Some models are equipped with a Chill Drawer. Chill Drawer temperatures can be adjusted by sliding the Chill Drawer Temperature Control in either direction. Use this pan for short term storage of bulk meat items. If meats are to be kept longer than one or two days, they should be frozen. The Chill Drawer is fixed and cannot be moved up or down. If fruits or vegetables are to be stored in the Chill Drawer, set the Chill Drawer Temperature Control to a warmer setting to prevent freezing.

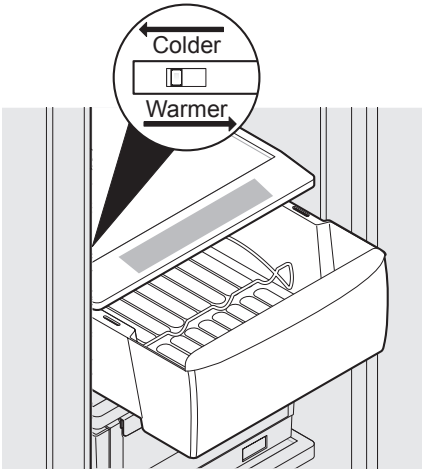

Chill Drawer
with Temperature Control

Priming the Water Supply System

Your refrigerator's water supply system includes several tubing lines, an advanced water filter, a distribution valve bank, and a reserve tank to ensure ample supply to the ice and water dispenser at all times. This system needs to be completely filled with water when first connected to an external supply line.

CAUTION

For proper dispenser operation, recommended water supply pressure should fall between 30 psi and 100 psi. Excessive pressure may cause water filter to malfunction.

To prime the water supply system:

1. Begin filling the tank by pressing and holding a drinking glass against the water dispenser paddle.
2. Keep the glass in this position until water comes out of the dispenser. **It may take about 1½ minutes.**
3. Continue dispensing water for about four minutes to flush the system and plumbing connections of any impurities (stopping to empty the glass as necessary).

NOTE

The water dispenser has a built-in device that shuts off the water flow after three minutes of continuous use. To reset this shutoff device, simply release the dispenser paddle.

Ice Maker Operation & Care

The ice maker, ice bin, and dispenser feeding mechanism are located in the top of the freezer compartment. After the refrigerator is installed properly and has cooled for several hours, the ice maker can produce ice within 24 hours. It can completely fill an ice bin in about two days.

Ice Production: What to Expect

How Much Ice Will a Side Mounted Ice Maker Produce in 24 Hours?

A side mounted ice maker will produce 4 to 4.5 pounds of ice every 24 hours, depending on usage conditions. Ice is produced at a rate of 8 cubes every 75 to 90 minutes.

How Much Ice Will a Rear Mounted Ice Maker Produce in 24 Hours?

A rear mounted ice maker will produce 3 to 4 pounds of ice every 24 hours, depending on usage conditions. Ice is produced at a rate of 8 cubes every 75 to 90 minutes.

Using the Ice Maker after Installation

Before making ice for the first time, be sure to prime the water supply system. Air in new plumbing lines can result in two or three empty ice maker cycles. Furthermore, if the system is not flushed, the first ice cubes may be discolored or have an odd flavor.

IMPORTANT

Your ice maker is shipped from the factory with the wire signal arm in the ON position (side mounted) or with the switch turned ON (rear mounted). To ensure proper function of your ice maker, hook up water supply immediately or turn ice maker OFF by lifting the wire signal arm until it clicks and locks in the UP position (side mounted) or turn the **On/Off** switch to the Off (**0**) position (rear mounted). **If the ice maker is not turned off and the water supply is not connected, the water valve will make a loud chattering noise**.

Turning the SIDE MOUNTED Ice Maker On and Off

To begin ice production, lower the wire signal arm to the DOWN or ON position. The ice maker turns off automatically when the ice container becomes full. To stop the ice maker, raise the wire signal arm until it clicks and locks in the UP or OFF position.

Turning the REAR MOUNTED Ice Maker On and Off

Ice production is controlled by the ice maker's **ON/OFF** power switch. To gain access to the ice maker, pull the ice cream shelf out. Press the switch to the "**O**" position to turn it Off and press it to the "**I**" position to turn it On. The ice maker also has a built-in wire signal arm, which automatically stops ice production when the ice bin is full. **DO NOT** use this signal arm to manually stop the ice maker.

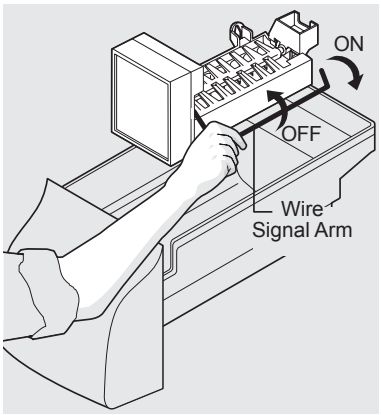

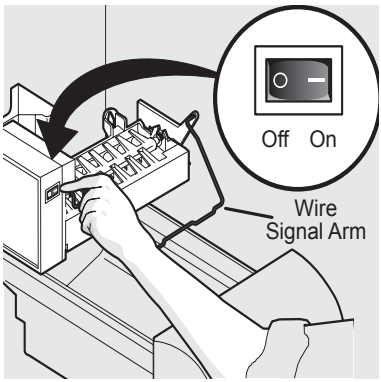

IMPORTANT

Small ice cubes or ice chips jamming in the ice maker may be a sign that your water filter needs changing. If you have a side mounted ice maker you may also experience hollow cubes partially frozen cubes with water inside. When these cubes are harvested, they break open and spill water over the other ice cubes in the ice container, forming a solid mass of ice. As the water filter nears the end of its useful life and becomes clogged with particles, less water is delivered to the ice maker during each cycle. The ice maker can't fill every cube in the ice maker mold, leading to small cubes or chips that can get caught between the ice ejector blades and the stripper. Remember, if your ice maker is jamming with small ice cubes or it's been six months or longer since you last changed your water filter replace the water filter with a new one. Poor quality household water may require the filter to be changed more frequently.

Ice Maker/Dispenser Tips

- Ice cubes stored too long may develop an odd flavor. Empty the ice container as explained below.
- Occasionally shake the ice container to keep ice separated.
- If your refrigerator is not connected to a water supply or the water supply is turned off, turn **Off** the ice maker.
- If you need a large quantity of ice at one time, it is best to get cubes directly from the ice container.
- The following sounds are normal when the ice maker is operating:
  - Motor running
  - Ice dropping into ice container
  - Water valve opening or closing
  - Ice loosening from tray
  - Running water
- When dispensing ice, you will hear a snapping or clicking sound when the ice chute opens and closes.
- Turn **Off** the ice maker when cleaning the freezer and during vacations.
  - If you turn **Off** the ice maker for a long period of time, you should also turn off the water supply valve.

CAUTION

Chemicals from a malfunctioning water softener can damage the ice maker. If the water supply to your refrigerator is softened, be sure the softener is maintained to work properly.

Cleaning the Ice Maker

Clean the ice maker and ice bin at regular intervals, particularly before you take a vacation or move.

To clean the ice maker:

1. Turn **Off** the ice maker.
2. Remove the ice bin by lifting up and out.
3. Empty and carefully clean the ice bin with mild detergent. Rinse with clear water. Do not use harsh or abrasive cleaners.
4. Allow the ice bin to dry completely before replacing in the freezer.
5. Remove ice chips and clean the ice bin shelf and the freezer door chute.
6. Replace the ice bin. Turn **On** the ice maker to resume ice production.

Remove and empty the ice storage bin if:

- An extended power failure (one hour or longer) causes ice cubes in the ice storage bin to melt and freeze together, jamming the dispenser mechanism.
- You do not use the ice dispenser frequently. Ice cubes will freeze together in the bin, jamming the dispenser mechanism.

Remove the ice storage bin and shake to loosen the cubes or clean as explained above.

CAUTION

NEVER use an ice pick or similar sharp instrument to break up the ice. This could damage the ice storage bin and dispenser mechanism.

IMPORTANT

When removing or replacing the ice bin, DO NOT rotate the auger in the ice bin. If the auger is accidentally rotated, you must realign the auger by turning it in 90 degree turns (see below) until the ice bin fits into place with the drive mechanism. **If the auger is not properly aligned** when replacing the ice bin, the refrigerator will only dispense Crushed Ice. The freezer door may also not close properly causing warm air to leak into the freezer.

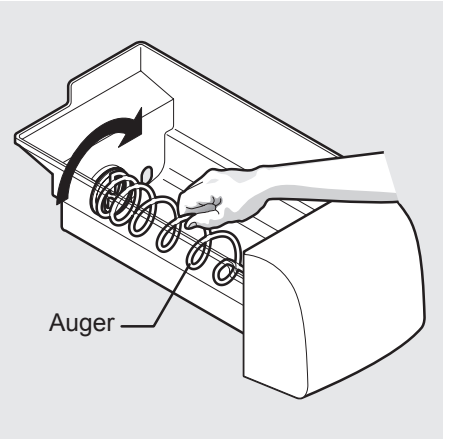

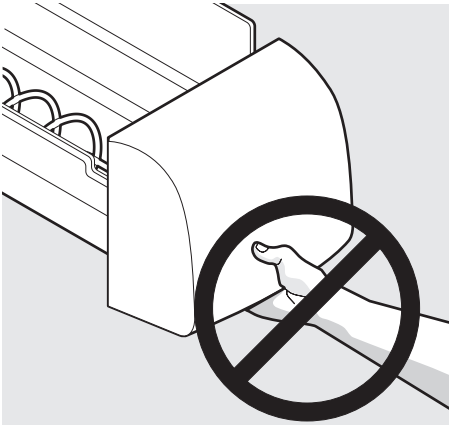

Locating the Filter

Your refrigerator is equipped with a water filtering system. The water filter system filters all dispensed drinking water, as well as the water used to produce ice.

Air Filter (some models)

The air filter is located at the top of the fresh food compartment next to the water filter.

Replacing the Air Filter

In general, you should change the air filter every six months (the filter status light on the control panel prompts you to replace the filter after six months) to ensure optimal filtering of refrigerator odors. You may want to adjust this time period depending on the types and amounts of food you typically store in your refrigerator. To replace your **PureSource Ultra™** air filter:

1. Pull the air filter housing straight out.
2. Remove the old filter and discard it.
3. Unpack the new filter and place it inside the housing.
4. Slide the housing back into position.

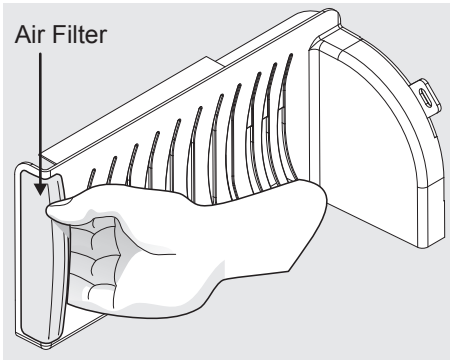

Water Filter

The water filter is located at the top right side of the fresh food compartment.

Replacing the Water Filter

In general, you should change the water filter every six months to ensure the highest possible water quality. Water Filter Status on the user interface prompts you to replace the filter after a standard amount of water (200 gallons/757 liters for **PureSource Ultra™** and **PureSource 3™**) has flowed through the system.

If your refrigerator has not been used for a period of time (during moving for example), change the filter before reinstalling the refrigerator.

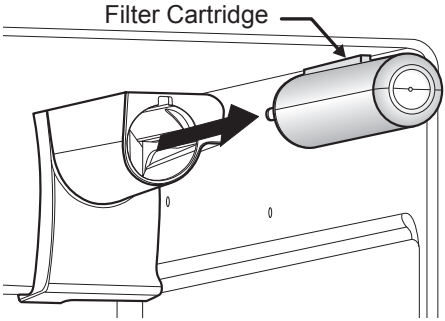

NOTE

If your refrigerator is equipped with a **PureSource 3™** water filter, it can be replaced with a **PureSource Ultra™** water filter. Replacing your **PureSource 3™** water filter with a **PureSource Ultra™** water filter removes more potential contaminants as tested by NSF. The contaminants or other substances removed or reduced by this water filter are not necessarily in all users' water.

Ordering Replacement Filters

To order your replacement filters, please visit our online store at www.frigidaire.com/store, by calling toll-free at 877-808-4195, or by visiting the dealer where you purchased your refrigerator. Frigidaire recommends that you order extra filters when you first install your refrigerator, and that you replace your filters at least once every six months.

Here are the product numbers to request when ordering:

PureSource Ultra™ Water Filter
Part# **ULTRAWF**

PureSource 3™ Water Filter
Part #**WF3CB**

NOTE

If your refrigerator is equipped with a **PureSource Ultra™** water filter, it must be replaced with **PureSource Ultra™** water filter ULTRAWF.

CHANGING THE FILTER

More about your Advanced Water Filter



The **PureSource Ultra™** ice and water filter system is tested and certified to NSF/ANSI Standards 42 and 53 for the reduction of claims specified on the performance data sheet.



The **PureSource 3™** ice and water filter system is tested and certified to NSF/ANSI Standards 42 and 53 for the reduction of claims specified on the performance data sheet.

Do not use with water that is microbiologically unsafe or of unknown quality without adequate disinfection before or after the system. Systems certified for cyst reduction may be used on disinfected waters that may contain filterable cysts.

Test & certification results:

- Rated Capacity - 200 gallons/757 liters for **PureSource Ultra™** and **PureSource 3™** ice and water filter
- Rated service flow - .50 gallons per minute
- Operating Temp.: Min. 33°F, Max. 100°F
- Maximum Rated Pressure - 100 pounds per square inch
- Recommended Minimum Operating Pressure: 30 pounds per square inch

To replace your PureSource 3™ water filter:

It is not necessary to turn the water supply off to change the filter. Be ready to wipe up any small amounts of water released during the filter replacement.

1. Turn Off the ice maker.
2. Remove the filter by pushing on the end/face of the filter.
3. Slide the old water filter cartridge straight out of the housing and discard it.
4. Unpackage the new filter cartridge. Using the alignment guide, slide it gently into the filter housing until it stops against the snap-in connector at the back of the housing.
5. Push firmly until the cartridge snaps into place (you should hear a click as the cartridge engages the snap-in connector).
6. Press a drinking glass against the water dispenser while checking for any leaks at the filter housing. Any spurts and sputters that occur as the system purges air out of the dispenser system are normal.
7. After filling one glass of water, continue flushing the system for about four minutes.
8. Turn On the ice maker.
9. Press and hold the Water Filter button on the Ice & Water Dispenser control panel for three seconds. When the display changes from "Red" to "Green," the status has been reset.

Understanding the Sounds you may Hear

Your new, high-efficiency refrigerator may introduce unfamiliar sounds. These sounds normally indicate your refrigerator is operating correctly. Some surfaces on floors, walls, and kitchen cabinets may make these sounds more noticeable.

Following is a list of major components in your refrigerator and the sounds they can cause:

- **A** **Evaporator** Refrigerant through the evaporator may create a boiling or gurgling sound.
- **B** **Evaporator fan** You may hear air being forced through the refrigerator by the evaporator fan.
- **C** **Defrost heater** During defrost cycles, water dripping onto the defrost heater may cause a hissing or sizzling sound. After defrosting, a popping sound may occur.
- **D** **Automatic ice maker** When ice has been produced, you will hear ice cubes falling into the ice bin.
- **E** **Electronic control & automatic defrost control** These parts can produce a snapping or clicking sound when turning the cooling system on and off.
- **F** **Condenser fan** You may hear air being forced through the condenser.
- **G** **Compressor** Modern, high-efficiency compressors run much faster than in the past. The compressor may have a high-pitched hum or pulsating sound.
- **H** **Water valve** Makes a buzzing sound each time it opens to fill the ice maker.
- **I** **Drain pan** (not removable) You may hear water dripping into the drain pan during the defrost cycle.
- **J** **Condenser** May create minimal sounds from forced air.
- **K** **Motorized damper** May produce a light humming during operation.
- **L** **Ice chute** When dispensing ice, you will hear a snapping or clicking sound when the solenoid opens and closes the ice chute.

NOTE

Energy efficient foam in your refrigerator is not a sound insulator.

NOTE

During automatic defrost cycle, a red glow in the back wall vents of your freezer compartment is normal.

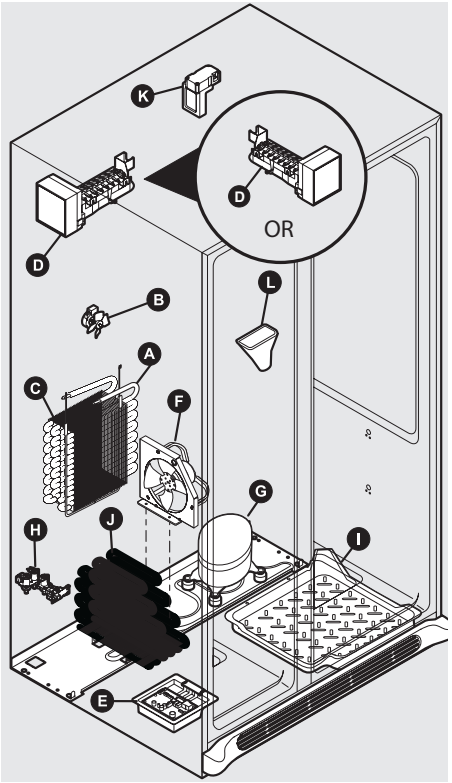

CARE & CLEANING

Protecting your investment

Keeping your refrigerator clean maintains appearance and prevents odor build-up. Wipe up any spills immediately and clean the freezer and fresh food compartments at least twice a year. When cleaning, take the following precautions:

- Never use CHLORIDE or cleaners with bleach to clean stainless steel.
- Do not wash any removable parts in a dishwasher.
- Always unplug the electrical power cord from the wall outlet before cleaning.
- Remove adhesive labels by hand. Do not use razor blades or other sharp instruments which can scratch the appliance surface.
- Do not remove the serial plate.

Do not use abrasive cleaners such as window sprays, scouring cleansers, brushes, flammable fluids, cleaning waxes, concentrated detergents, bleaches or cleansers containing petroleum products on plastic parts, interior doors, gaskets or cabinet liners. Do not use paper towels, metallic scouring pads, or other abrasive cleaning materials or strong alkaline solutions.

NOTE

If you set your temperature controls to turn off cooling, power to lights and other electrical components will continue until you unplug the power cord from the wall outlet.

CAUTION

- Pull the refrigerator straight out to move it. Shifting it from side to side may damage flooring. Be careful not to move the refrigerator beyond the plumbing connections.
- Damp objects stick to cold metal surfaces. Do not touch refrigerated surfaces with wet or damp hands.

IMPORTANT

If you store or move your refrigerator in freezing temperatures, be sure to completely drain the water supply system. Failure to do so could result in water leaks when the refrigerator is put back into service. Contact a service representative to perform this operation.

Care & Cleaning Tips		
Part	**What To Use**	**Tips and Precautions**
Interior & Door Liners	• Soap and water • Baking soda and water	Use two tablespoons of baking soda in one quart of warm water. **Be sure to wring excess water out of sponge or cloth before cleaning around controls, light bulb or any electrical part.**
Door Gaskets	• Soap and water	Wipe gaskets with a clean soft cloth.
Drawers & Bins	• Soap and water	Use a soft cloth to clean drawer runners and tracks.
Glass Shelves	• Soap and water • Glass cleaner • Mild liquid sprays	Allow glass to warm to room temperature before immersing in warm water.
Toe Grille	• Soap and water • Mild liquid sprays • Vacuum attachment	Vacuum dust from front of toe grille. Remove toe grille (see Installation Instructions). Vacuum backside, wipe with sudsy cloth or sponge. Rinse and dry.
Exterior & Handles	• Soap and water • Non Abrasive Glass Cleaner	Do not use commercial household cleaners containing ammonia, bleach or alcohol to clean handles. Use a soft cloth to clean smooth handles. **DO NOT use a dry cloth to clean smooth doors.**
Exterior & Handles **(Stainless Steel Models Only)**	• Soap and water • Stainless Steel Cleaners	**Never use CHLORIDE or cleaners with bleach to clean stainless steel.** Clean stainless steel front and handles with non-abrasive soapy water and a dishcloth. Rinse with clean water and a soft cloth. Use a non-abrasive stainless steel cleaner. These cleaners can be purchased at most home improvement or major department stores. Always follow manufacturer's instructions. Do not use household cleaners containing ammonia or bleach. **NOTE: Always clean, wipe and dry with the grain to prevent scratching.** Wash the rest of the cabinet with warm water and mild liquid detergent. Rinse well, and wipe dry with a clean soft cloth.
Replacing Light Bulbs	• Unplug refrigerator • Wear gloves • Remove light cover • Replace old bulb • Replace light cover • Plug in the refrigerator	**CAUTION: Wear gloves when replacing light bulbs to avoid getting cut.** Use same wattage when replacing bulb.

BEFORE YOU CALL

1-800-944-9044 (United States)
1-800-265-8352 (Canada)

Visit our web site at **www.frigidaire.com**

CONCERN	CAUSE	SOLUTION
AUTOMATIC ICE MAKER		
Ice maker is not making any ice.	• Ice maker wire signal arm is in the "up" or **OFF** position. • Ice maker power switch is Off. • Ice maker has small cube caught in mechanism. • Saddle valve on cold water pipe is clogged or restricted by foreign material.	• Move wire signal arm to the "down" or **ON** position (side mounted). • Turn power switch to On ("**I**") position (rear mounted). • Remove small cube from ice maker. The ice and water filter cartridge may be clogged. Replace filter cartridge. • Turn off household water line valve. Remove valve. Ensure that valve is not a self-piercing saddle valve. Clean valve. Replace valve if necessary.
Ice maker is not making enough ice.	• Ice maker is producing less ice than you expect. • Check to see if water dispenser is dispensing slower than normal. • Freezer control is set too warm.	• Side mounted ice maker should produce 4 to 4.5 pounds (approximately 4 quarts) of ice every 24 hours. A rear mounted ice maker should produce 3 to 4 pounds (approximately 3½ quarts) of ice every 24 hours. **Quick Ice** option should produce up to 50% more ice every 24 hours. • If it is, replace the ice and water filter cartridge. • Set freezer control to colder setting to improve performance of the ice maker. Allow 24 hours for temperature to stabilize.
Ice maker will not stop making ice.	• Ice maker wire signal arm is being held down by some item in the freezer.	• Move item and release wire signal arm. Remove any ice cubes that are frozen together over the wire signal arm.
Ice cubes are freezing together.	• Ice cubes are not being used frequently enough. • Ice cubes are hollow (partially frozen cubes with water inside). • Freezer control is set too warm.	• Remove ice container and discard ice from container. Ice maker will produce fresh supply. • The ice and water filter cartridge may be clogged. Replace filter cartridge. • Set freezer control to colder setting. Allow 24 hours for temperature to stabilize.
DISPENSER (Ice & Water)		
Dispenser will not dispense ice.	• Dispenser lock out is engaged. • There is no ice in the bin to be dispensed. • The refrigerator doors are not completely closed. • Dispenser paddle has been pressed too long and the dispenser motor has overheated.	• Press and hold control lock for three seconds. • See the "Ice maker is not making any ice" section above. • Be sure the refrigerator doors are completely closed. • The motor overload protector will reset in about three minutes and then ice can be dispensed.
Ice dispenser is jammed.	• Ice has melted and frozen around auger due to infrequent use, temperature fluctuations, and/or power outages. • Ice cubes are jammed between ice maker and back of ice container.	• Remove ice container, thaw, and empty the contents. Clean container, wipe dry, and replace in proper position. When new ice is made, dispenser should operate. • Remove ice cubes that are jamming the dispenser.

CONCERN	CAUSE	SOLUTION
DISPENSER (Ice & Water) (Continued)		
Dispenser will not dispense water.	• Dispenser lock out is engaged. • Water filter not seated properly. • Water filter is clogged. • Household water line valve is not open.	• Press and hold control lock for three seconds. • Remove and reinstall the water filter. Be sure to push the filter firmly so that you hear it lock solidly into position. • Replace filter cartridge. Be sure to remove protective caps and push the filter firmly so that you hear it lock solidly into position. • Open household water line valve. See **CONCERN** column **AUTOMATIC ICE MAKER.**
Water has an odd taste and/ or odor.	• Water has not been dispensed for an extended period of time. • Unit not properly connected to cold water line.	• Draw and discard 10-12 glasses of water to freshen the supply. • Connect unit to cold water line that supplies water to the kitchen faucet.
Water pressure is extremely low.	• Cut-off and cut-on pressures are too low (well systems only). • Reverse osmosis system is in regenerative phase.	• Have someone turn up the cut-off and cut-on pressure on the water pump system (well systems only). • It is normal for a reverse osmosis system to be below 20 psi during the regenerative phase.
Water not cold enough.	• As warmer tap water goes through the filter and enters the water tank the chilled water is pushed through to the dispenser. Once the chilled water is used up it will take several hours to bring the freshly replaced water to a cooler temperature.	• Add ice to cup or container before dispensing water.
OPENING/CLOSING OF DOORS/DRAWERS		
Door(s) will not close.	• Door was closed too hard, causing other door to open slightly. • Refrigerator is not level. It rocks on the floor when moved slightly. • Refrigerator is touching a wall or cabinet.	• Close both doors gently. • Ensure floor is level and solid, and can adequately support the refrigerator. Contact a carpenter to correct a sagging or sloping floor. • Ensure floor is level and solid, and can adequately support the refrigerator. Contact a carpenter to correct a sagging or sloping floor.
Drawers are difficult to move.	• Food is touching shelf on top of drawer. • Track that drawers slide on is dirty.	• Remove top layer of items in drawer. • Ensure drawer is properly installed on track. • Clean drawer, rollers, and track. See **Care & Cleaning**.

BEFORE YOU CALL

CONCERN	CAUSE	SOLUTION
RUNNING OF REFRIGERATOR		
Compressor does not run.	• Freezer control is set to "OF" or "0". • Refrigerator is in defrost cycle. • Plug at electrical outlet is disconnected. • House fuse blown or tripped circuit breaker. • Power outage.	• Set freezer control. • This is normal for a fully automatic defrost refrigerator. The defrost cycle occurs periodically, lasting about 30 minutes. • Ensure plug is tightly pushed into outlet. • Check/replace fuse with a 15 amp time-delay fuse. Reset circuit breaker. • Check house lights. Call local electric company.
Refrigerator runs too much or too long.	• Room or outside weather is hot. • Doors are opened too frequently or too long. • Fresh Food/freezer door may be slightly open. • Freezer control is set too cold. • Fresh Food/freezer gasket is dirty, worn, cracked, or poorly fitted. • Condenser is dirty.	• It's normal for the refrigerator to work longer under these conditions. • Warm air entering the refrigerator causes it to run more. Open doors less often. • Ensure refrigerator is level. Keep food and contains from blocking door. See PROBLEM column OPENING/CLOSING OF DOORS/DRAWERS. • Set Fresh Food control to warmer setting until refrigerator temperature is satisfactory. Allow 24 hours for temperature to stabilize. • Clean or change gasket. Leaks in door seal will cause refrigerator to run longer in order to maintain desired temperatures. • Clean condenser. See Care & Cleaning.
Compressor goes off and on frequently.	• Thermostat keeps the refrigerator at a constant temperature.	• This is normal. Refrigerator goes on and off to keep temperature constant.
DIGITAL TEMPERATURE DISPLAY		
Digital temperature displays are flashing.	• Electronic control system has detected a performance problem.	• Call your Frigidaire service representative, who can interpret any messages or number codes flashing on the digital displays.
WATER/MOISTURE/FROST INSIDE REFRIGERATOR		
Moisture collects on inside of refrigerator walls.	• Weather is hot and humid. • Door is slightly open.	• The rate of frost buildup and internal sweating increases. • See PROBLEM column OPENING/CLOSING OF DOORS/DRAWERS.
Water collects on bottom side of drawer cover.	• Vegetables contain and give off moisture.	• It is not unusual to have moisture on the bottom side of the cover. • Move humidity control (some models) to lower setting.
Water collects in bottom of drawer.	• Washed vegetables and fruit drain while in the drawer.	• Dry items before putting them in the drawer. Water collecting in bottom of drawer is normal.
WATER/MOISTURE/FROST OUTSIDE REFRIGERATOR		
Moisture collects on outside of refrigerator or between doors.	• Weather is humid. • Door is slightly open, causing cold air from inside refrigerator to meet warm air from outside.	• This is normal in humid weather. When humidity is lower, the moisture should disappear. • See PROBLEM column OPENING/CLOSING OF DOORS/DRAWERS.

MAJOR APPLIANCE WARRANTY

Your appliance is covered by a one year limited warranty. For one year from your original date of purchase, Electrolux will pay all costs for repairing or replacing any parts of this appliance that prove to be defective in materials or workmanship when such appliance is installed, used and maintained in accordance with the provided instructions.

Exclusions

This warranty does not cover the following:

1. Products with original serial numbers that have been removed, altered or cannot be readily determined.
2. Product that has been transferred from its original owner to another party or removed outside the USA or Canada.
3. Rust on the interior or exterior of the unit.
4. Products purchased "as-is" are not covered by this warranty.
5. Food loss due to any refrigerator or freezer failures.
6. Products used in a commercial setting.
7. Service calls which do not involve malfunction or defects in materials or workmanship, or for appliances not in ordinary household use or used other than in accordance with the provided instructions.
8. Service calls to correct the installation of your appliance or to instruct you how to use your appliance.
9. Expenses for making the appliance accessible for servicing, such as removal of trim, cupboards, shelves, etc., which are not a part of the appliance when it is shipped from the factory.
10. Service calls to repair or replace appliance light bulbs, air filters, water filters, other consumables, or knobs, handles, or other cosmetic parts.
11. Surcharges including, but not limited to, any after hour, weekend, or holiday service calls, tolls, ferry trip charges, or mileage expense for service calls to remote areas, including the state of Alaska.
12. Damages to the finish of appliance or home incurred during installation, including but not limited to floors, cabinets, walls, etc.
13. Damages caused by: services performed by unauthorized service companies; use of parts other than genuine Electrolux parts or parts obtained from persons other than authorized service companies; or external causes such as abuse, misuse, inadequate power supply, accidents, fires, or acts of God.

DISCLAIMER OF IMPLIED WARRANTIES; LIMITATION OF REMEDIES

CUSTOMER'S SOLE AND EXCLUSIVE REMEDY UNDER THIS LIMITED WARRANTY SHALL BE PRODUCT REPAIR OR REPLACEMENT AS PROVIDED HEREIN. CLAIMS BASED ON IMPLIED WARRANTIES, INCLUDING WARRANTIES OF MERCHANTABILITY OR FITNESS FOR A PARTICULAR PURPOSE, ARE LIMITED TO ONE YEAR OR THE SHORTEST PERIOD ALLOWED BY LAW, BUT NOT LESS THAN ONE YEAR. ELECTROLUX SHALL NOT BE LIABLE FOR CONSEQUENTIAL OR INCIDENTAL DAMAGES SUCH AS PROPERTY DAMAGE AND INCIDENTAL EXPENSES RESULTING FROM ANY BREACH OF THIS WRITTEN LIMITED WARRANTY OR ANY IMPLIED WARRANTY. SOME STATES AND PROVINCES DO NOT ALLOW THE EXCLUSION OR LIMITATION OF INCIDENTAL OR CONSEQUENTIAL DAMAGES, OR LIMITATIONS ON THE DURATION OF IMPLIED WARRANTIES, SO THESE LIMITATIONS OR EXCLUSIONS MAY NOT APPLY TO YOU. THIS WRITTEN WARRANTY GIVES YOU SPECIFIC LEGAL RIGHTS. YOU MAY ALSO HAVE OTHER RIGHTS THAT VARY FROM STATE TO STATE.

If You Need Service

Keep your receipt, delivery slip, or some other appropriate payment record to establish the warranty period should service be required. If service is performed, it is in your best interest to obtain and keep all receipts. Service under this warranty must be obtained by contacting Electrolux at the addresses or phone numbers below.

This warranty only applies in the USA and Canada. In the USA, your appliance is warranted by Electrolux Major Appliances North America, a division of Electrolux Home Products, Inc. In Canada, your appliance is warranted by Electrolux Canada Corp. Electrolux authorizes no person to change or add to any obligations under this warranty. Obligations for service and parts under this warranty must be performed by Electrolux or an authorized service company. Product features or specifications as described or illustrated are subject to change without notice.

USA
1.800.944.9044
Frigidaire
10200 David Taylor Drive
Charlotte, NC 28262

Electrolux

Canada
1.800.265.8352
Electrolux Canada Corp.
5855 Terry Fox Way
Mississauga, Ontario, Canada
L5V 3E4