fridgemaster

How to use your new Fridge Freezer

Model MC55265DFB
MC55265DFS
MC55265DF

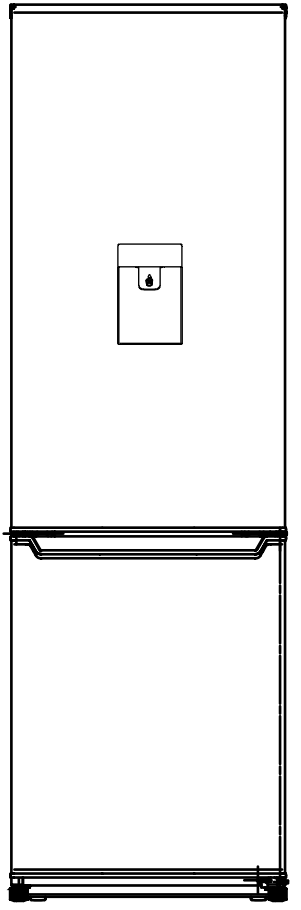

Contents

Safety and warning information_ _ _ _ _ 2
Installing your new appliance_ _ _ _ _ _ 8
Reversing the door _ _ _ _ _ _ _ _ _ _ _ _9
Description of the appliance _ _ _ _ _ _12
Operation_ _ _ _ _ _ _ _ _ _ _ _ _ _ _ _14
Using your appliance _ _ _ _ _ _ _ _ _ _15
Helpful hints and tips _ _ _ _ _ _ _ _ _ _17
Cleaning and care _ _ _ _ _ _ _ _ _ _ _ 18
Troubleshooting_ _ _ _ _ _ _ _ _ _ _ _ _20
Disposal of the appliance_ _ _ _ _ _ _ _21

Safety and warning information

For your safety and correct usage, before installing and first using the appliance, read this user manual carefully, including its hints and warnings. To avoid unnecessary mistakes and accidents, it is important to make sure that all people using the appliance are thoroughly familiar with its operation and safety features. Save these instructions and be sure that they remain with the appliance if it is moved or sold, so that anyone using it throughout its life, will be properly informed on its usage and safety notices.
For the safety of life and property, keep the precautions of these user's instructions as the manufacturer is not responsible for damages caused by omission.

Safety for children and others who are vulnerable people

- According to EN standard
  This appliance can be used by children aged from 8 years and above and persons with reduced physical, sensory or mental capabilities or lack of experience and knowledge if they have been given supervision or instruction concerning use of the appliance in a safe way and understand the hazards involved. Children shall not play with the appliance. Cleaning and user maintenance shall not be made by children without supervision.
  Children aged from 3 to 8 years are allowed to load and unload refrigerating appliances.
- According to IEC standard
  This appliance is not intended for use by persons (including children) with reduced physical, sensory or mental capabilities, or lack of experience and knowledge, unless they have been given supervision or instruction concerning

use of the appliance by a person responsible for their safety. Children should be supervised to ensure that they do not play with the appliance.

- Keep all packaging away from children as there is risk of suffocation.
- If you are discarding the appliance, pull the plug out of the socket, cut the connection cable (as close to the appliance as you can) and remove the door to prevent children playing from suffering an electric shock or from closing themselves inside it.
- If this appliance, featuring a magnetic door seals, is to replace an older appliance having a spring lock (latch) on the door or lid, be sure to make the spring lock unusable before you discard the old appliance. This will prevent it from becoming a death trap for a child.

General safety



- WARNING —This appliance is intended to be used in household and similar applications such as
  -staff kitchen areas in shops, offices and other working environments;
  -farm houses and by clients in hotels, motels and other residential type environments;
  -bed and breakfast type environments;
  -catering and similar non-retail applications.
- WARNING — Do not store explosive substances such as aerosol cans with a flammable propellant in this appliance.
- WARNING — If the supply cord is damaged, it must be replaced by the manufacturer, its service agent or similarly qualified persons in order to avoid a hazard.
- WARNING — Keep ventilation opening, in the appliance enclosure or in the built-in structure, clear of obstruction.
- WARNING — Do not use mechanical devices or other means to accelerate the defrosting process, other than those recommended by the manufacturer.
- WARNING — Do not damage the refrigerant circuit.
- WARNING — Do not use electrical appliances inside the food storage compartments of the appliance, unless they are of the type recommended by the manufacturer.

- WARNING — The refrigerant and insulation blowing gas are flammable. When disposing of the appliance, do so only at an authorized waste disposal centre. Do not expose to flame.
- WARNING —When positioning the appliance, ensure the supply cord is not trapped or damaged.
- WARNING —Do not locate multiple portable socket-outlets or portable power supplies at the rear of the appliance.
- WARNING —Food needs to be packed in bags before putting into the refrigerator, and liquids need to be packed in bottles or capped containers to avoid the problem that the product design structure is not easy to clean.

The symbol  is a warning and indicates the refrigerant and insulation blowing gas are flammable.
Warning: Risk of fire / flammable materials

Replacing the illuminating lamps

- WARNING—The illuminating lamps must not be replaced by the user! If the illuminating lamps is damaged, contact the customer helpline for assistance.

This warning is only for refrigerators that contain illuminating lamps.

Refrigerant

The refrigerant isobutene (R600a) is contained within the refrigerant circuit of the appliance, a natural gas with a high level of environmental compatibility, which is nevertheless flammable. During transportation and installation of the appliance, ensure that none of the components of the refrigerant circuit becomes damaged.
The refrigerant (R600a) is flammable.

- WARNING — Refrigerators contain refrigerant and gases in the insulation. Refrigerant and gases must be disposed of professionally as they may cause eye injuries or ignition. Ensure that tubing of the refrigerant circuit is not damage prior to proper disposal.

If the refrigerant circuit should be damaged:

-Avoid opening flames and sources of ignition.
-Thoroughly ventilate the room in which the appliance is situated.
It is dangerous to alter the specifications or modify this product in any way.
Any damage to the cord may cause a short circuit, fire, and/or electric shock.



Electrical safety

1.The power cord must not be lengthened.
2. Make sure that the power plug is not crushed or damaged. A crushed or damaged power plug may overheat and cause a fire.
3. Make sure that you can access the main plug of the appliance.
4. Do not pull the main cable.
5. If the power plug socket is loose, do not insert the power plug. There is a risk of electric shock or fire.
6.You must not operate the appliance without the interior lighting lamp cover.
7.The fridge is only applied with power supply of single phase alternating current of 220~240V/50Hz. If fluctuation of voltage in the district of user is so large that the voltage exceeds the above scope, for safety sake, be sure to apply A.C. automatic voltage regulator of more than 350W to the fridge. The fridge must employ a special power socket instead of common one with other electric appliances. Its plug must match the socket with ground wire.

Daily use

- Do not store flammable gases or liquids in the appliance, There is a risk of an explosion.
- Do not operate any electrical appliances in the appliance (e.g.electric ice cream makers,mixers etc.).
- When unplugging always pull the plug from the mains socket,do not pull on the cable.
- Do not place hot items near the plastic components of this appliance.

- Do not place food products directly against the air outlet on the rear wall.
- Store pre-packed frozen food in accordance with the frozen food manufacture's instructions.
- The appliances manufactures storage recommendations should be strictly adhered to relevant instructions for storage.
- Do not place carbonated or fizzy drinks in the freeze compartment as it creates pressure on the container,which may cause it to explode,resulting in damage to the appliance.
- Frozen food can cause frost burns if consumed straight from the freezer compartment.
- Do not place the appliance in direct sunlight.
- Keep buring candles,lamps and other items with naked flames away from the appliance so that do not set the appliance on fire.
- The appliance is intended for keeping food stuff and/or beverages in normal household as explained in this instruction booklet, The appliance is heavy.Care should be taken when moving it.
- Do not remove nor touch items from the freezer compartment if your hands are damp/wet,as this could cause skin abrasions or frost/freezer burns.
- Never use the base,drawers, doors etc. to stand on or as supports.
- Frozen food must not be refrozen once it has been thawed out.
- Do not consume ice popsicles or ice cubes straight from the freezer as this can cause freezer burn to the mouth and lips.
- To avoid items falling and causing injury or damage to the appliance, do not overload the door racks or put too much food in the crisper drawers.
- This refrigerating appliance is not intended to be used as a built-in appliance.

Caution!

Care and cleaning

- Before maintenance, switch off the appliance and disconnect the mains plug from the mains socket.
- Do not clean the appliance with metal objects, steam cleaner, ethereal oils, organic solvents or abrasive cleansers.
- Do not use sharp objects to remove frost from the appliance. Use a plastic scraper.

Installation Important!

- For electrical connection carefully, follow the instructions given in this manual.
- Unpack the appliance and check if there are damages on it. Do not connect the appliance if it is damaged. Report possible damages immediately to the place you bought it. In this case retain packing.
- It is advisable to wait at least four hours before connecting the appliance to allow the oil to flow back in the compressor.
- Adequate air circulation should be around the appliance, lacking this leads to overheating. To achieve sufficient ventilation, follow the instructions relevant to installation.
- Wherever possible, the back of the product should not be too close to a wall to avoid touching or catching warm parts (compressor, condenser) to prevent the risk of a fire, follow the instructions relevant to installation.
- The appliance must not be located close to radiators or cookers.
- Make sure that the mains plug is accessible after the installation of the appliance.

Service

- Any electrical work required to do the servicing of the appliance should be carried out by qualified electrician or competent person.
- This product must be serviced by an authorized Service Center, and only genuine spare parts must be used.
  1)If the appliance is Frost Free.
  2)If the appliance contains freezer compartment.

Installing your new appliance

Before using the appliance for the first time, you should review the following tips.

Ventilation of appliance

⚠ In order to improve efficiency of the cooling system and save energy, it is necessary to maintain good ventilation around the appliance. For this reason, sufficient clear space should be available around the refrigerator.
It is advisable for there to be at least (50-70)mm of space from the back to the wall, at least 100mm from its top, at last 100mm from its side to the wall and a clear space in front to allow the doors to open 135°. Please see the following diagrams.

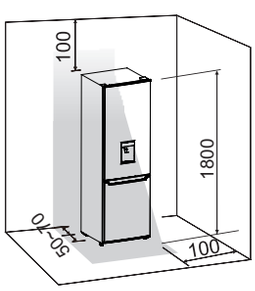

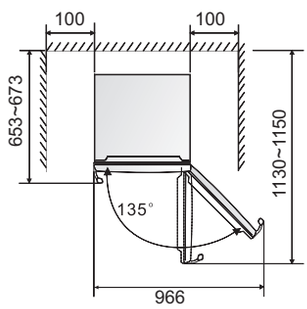

- Note:
  This appliance performs well within the climate class from N to STshowed in the table below.
  It may not work properly if left at a temperature above or below the indicated range for a long period.

Climate class	Ambient temperature
SN	+10°C to +32°C
N	+16°C to +32°C
ST	+16°C to +38°C
T	+16°C to +43°C

- Stand your appliance in a dry place to avoid moisture damage.
- Keep the appliance out of direct sunlight, rain or frost. Stand the appliance away from heat sources such as stoves, fires or heaters.

Leveling of appliance

- For sufficient leveling and air circulating in the lower rear section of the appliance, the bottom feet may need to be adjusted.
- You can adjust them manually using a suitable spanner.
  To allow the doors to self-close, tilt the top backwards by about 10mm.

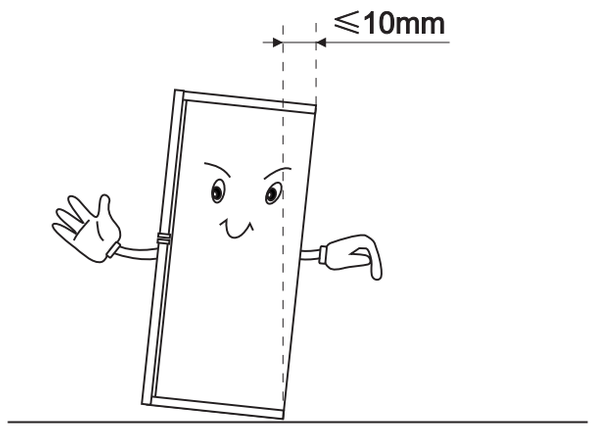

Reversing the door

The side at which the door opens can be changed, from the right side (as supplied) to the left side, if trequired.
Warning! When reversing the door, the appliance must not be connected to the mains. Ensure that the plug is removed from the mains socket.

Tools you will need

Not provided		
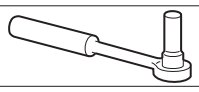	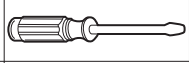	
8mm socket wrench	Thin-blade screwdriver	Putty knife
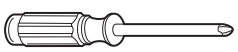		
Cross-shaped screwdriver	Monkey wrench	8mm wrench
Additional parts (in the plastic bag)		
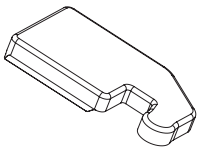		
Left Hinge Cover		

Note: If required, you may lay the refrigerator on its back in order to gain access to the base, you should rest it on soft foam packaging or similar material to avoid damaging the backboard of the refrigerator. To reverse the door, the following steps are generally recommended.
1. Stand the refrigerator upright. Open the upper door to take out all door racks and tank(to avoid damage) and then close the door.

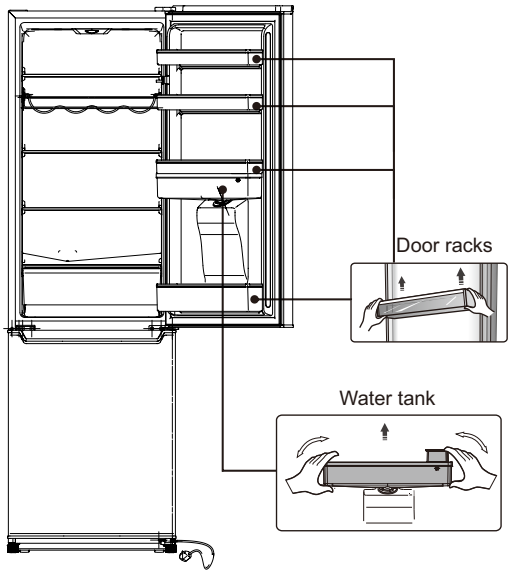

2. Use a putty knife or thin-blade screwdriver to prize the screw hole cover which is at the top left corner of the refrigerator, and the upper hinge cover which is at the top right corner of the refrigerator.

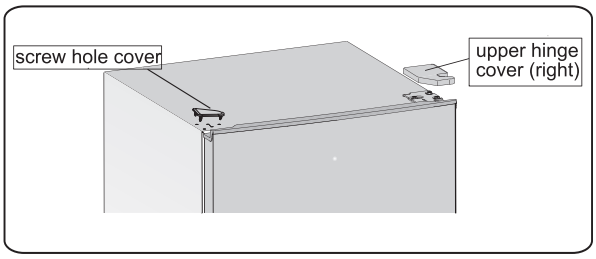

3. Unscrew the special flange self-tapping screws which are used for fixing the right upper hinge part by a 8mm socket driver or a spanner (please support the upper door with your hand when doing it) .

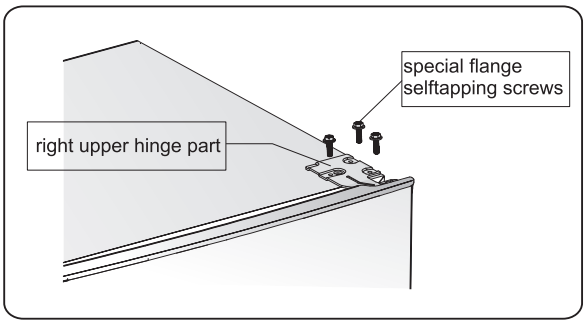

4.Remove the upper hinge axis, transfer it to reversed side and tighten securely, then put it in a safe place.

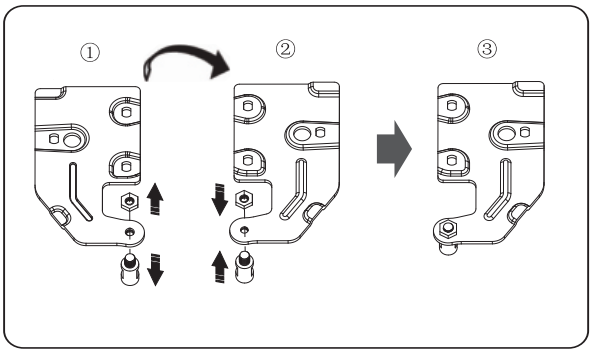

5. Remove the upper door from the middle hinge by carefully lifting the door straight up.
NOTE: When removing the door, watch for washer(s) between the center hinge and the bottom of the freezer door that may stick to the door. Do not lose.

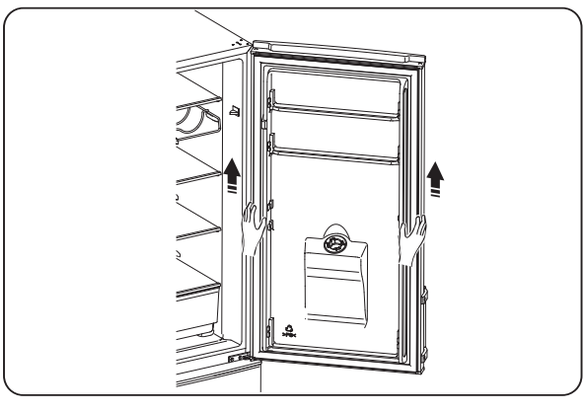

6. Place the upper door on a smooth surface with its panel upwards. Loose screw ② and part ①, then Install them to the left side and tighten securely.

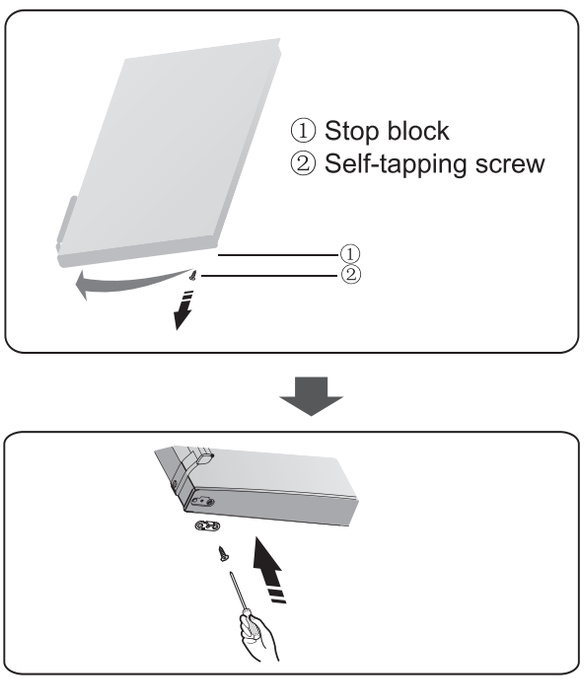

7. Unscrew the two special flange self-tapping screws which are used for fixing the middle hinge part, then remove the middle hinge part that hold the lower door in place.

NOTE: When removing the door, watch for washer(s) between the center hinge and the bottom of the freezer door that may stick to the door. Don't lose it.

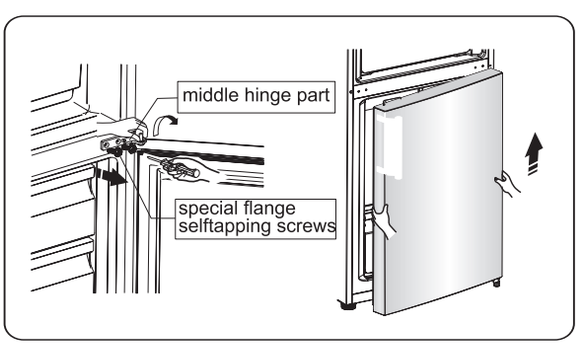

8. Place the lower door on a smooth surface with its panel upwards. Loose screw ② and part ①, then Install them to the left side and tighten securely.

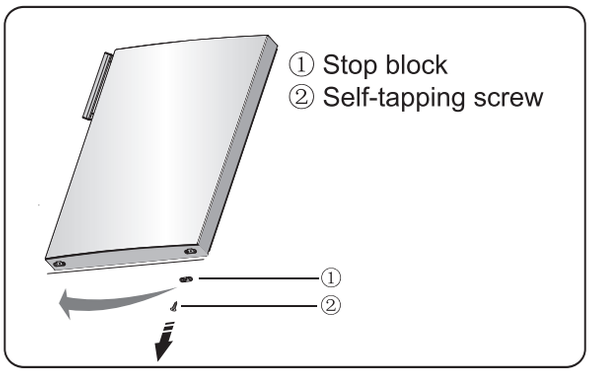

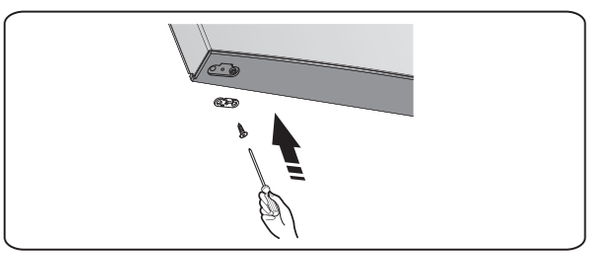

9. Change screw hole covers on middle cover plate from left to right (as shown in figure below).

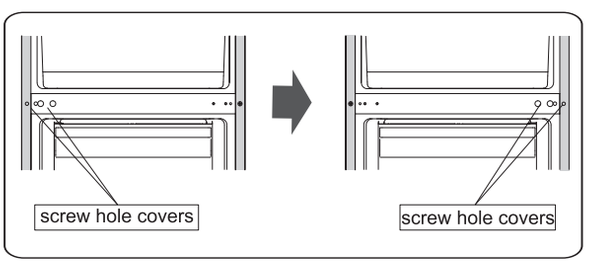

10. Lay the refrigerator on soft foam packaging or similar material. Remove both adjustable bottom feet parts, and remove the front feet board and the lower hinge part by unscrewing the special flange self-tapping screws.

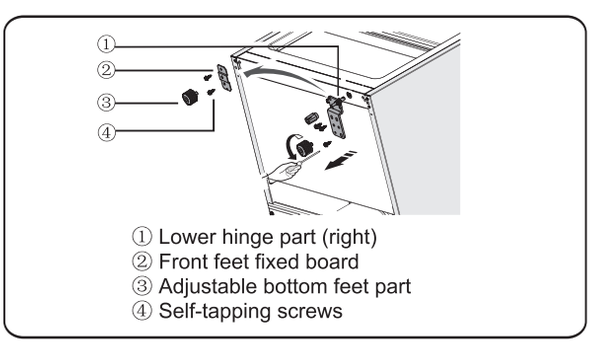

11. Unscrew the bottom hinge axis and remove it to the hole which is side by side and screw it.

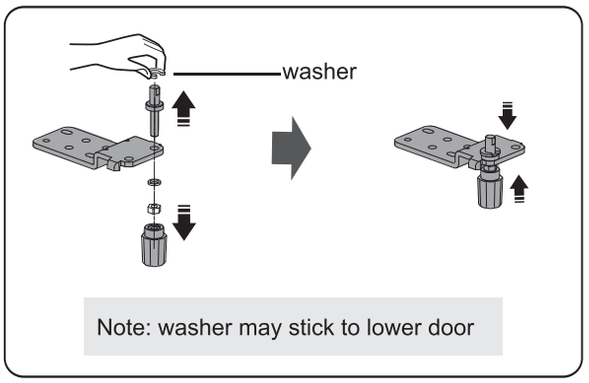

12.Replace the lower hinge part to the left side and fixing it with the special flange self-tapping screws. Replace the front feet fixed board to another side and fixing it with the special flange self-tapping screws. Install the adjustable bottom feet parts.

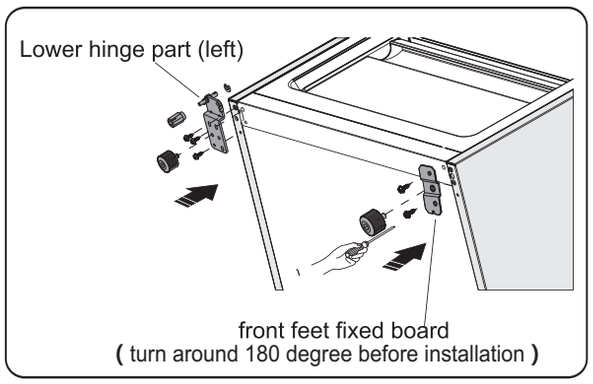

13.Transfer the lower door to the property position, adjust the lower hinge part, make the hinge axis into the lower hole of the lower door, then tight the bolts.

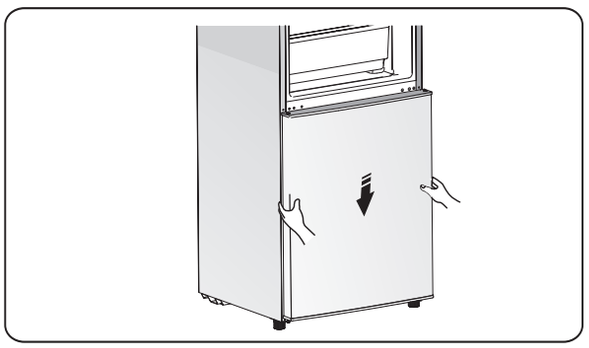

14.Upturn the middle hinge part the direction 180 degree, transfer it and adjust its position, make the middle hinge axis into the upper hole of the lower door, tight the bolts.

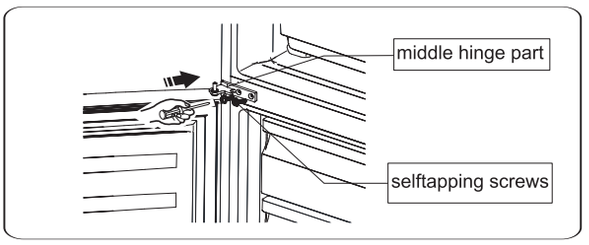

15. Transfer the upper door to the appropriate position. Secure the door's level, make the middle hinge axis into the lower hole of the upper door.



16. Transfer the upper hinge part and make the upper hinge axis into the upper hole of the upper door, and adjust the position of the upper door (please support the upper door with your hand when doing it), fixing the upper hinge part with the special flange self-tapping screws.

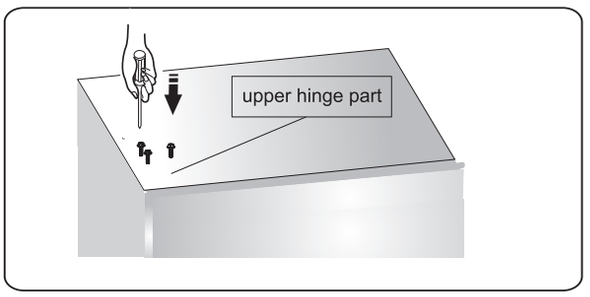

17. Install the screw hole cover on the top right corner of the refrigerator. Install the upper hinge cover (which is in the plastic bag) on the left corner. Put the other upper hinge cover into the plastic bag.

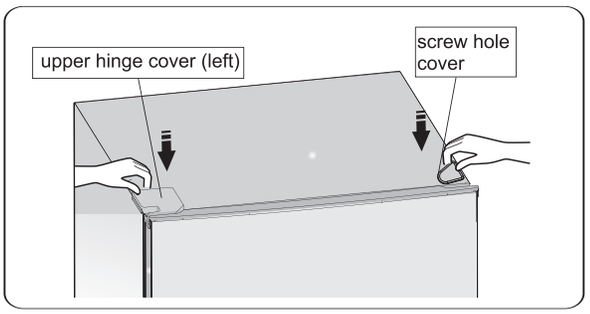

18. Open the upper door and install the door shelves, then close it.

Warning!
When changing the side at which the door opens, the appliance must not be connected to the mains. Remove plug from the mains beforehand.

19. Switch the handles from the left to the right (only for the model with handles).

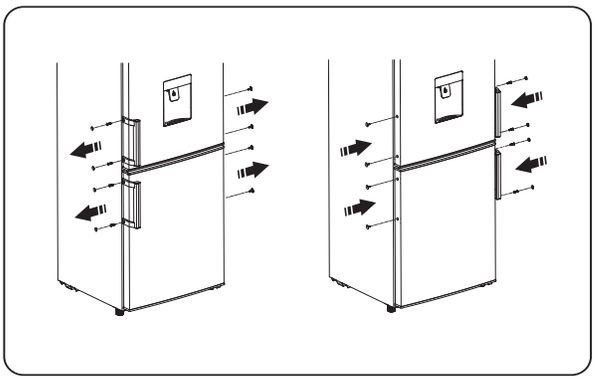

Description of the appliance

1. Controller box and LED light
2. Door switch
3. Bottle rack (optional)
4. Shelf
5. Crisper box cover
6. Crisper drawer
7. Freezer upper drawer
8. Freezer lower drawer
9. Adjustable bottom feet
10. Egg tray (inside; optional)
11. Upper rack
12. Middle rack
13. Water storage box pack
14. Refrigerator door
15. Lower rack
16. Handle part (optional)
17. Freezer door

View of the appliance

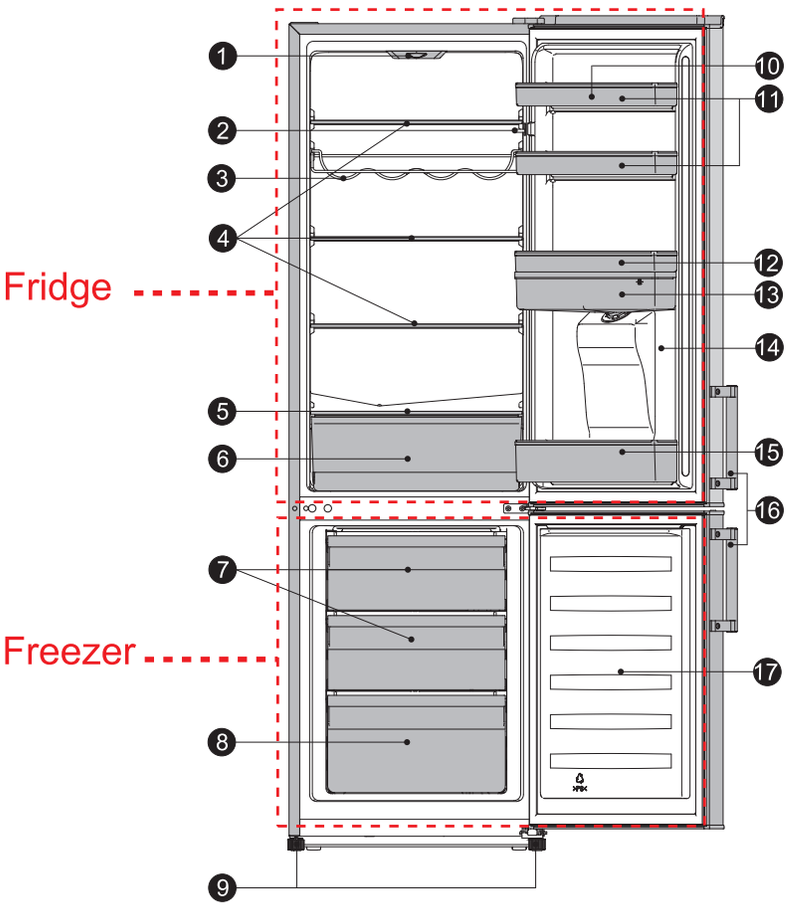

Note: Due to constant development of our products, your refrigerator may be slightly different from this instruction manual, but its functions and usage remain the same. To get more space in freezer, you can remove drawers (except the bottom freezer drawer), ice tray.

Note: To get the best energy efficiency of this product, please place all shelves, drawers on their original position as the illustration above.

Parameter of appliance	a	b	c	d	e
MC55265DFB MC55265DFS MC55265DF	1800	550	558	/	1065

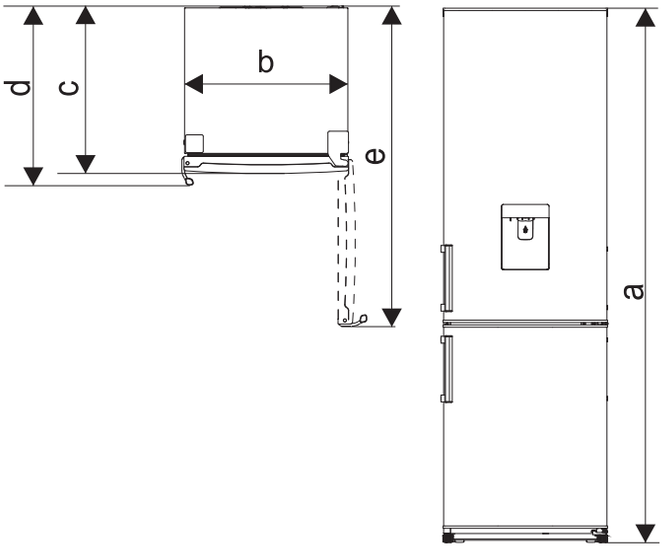

	Technical characteristics
a	Height
b	Width
c	Profundity(door closed without handle)
d	Profundity(door closed with handle)
e	Profundity(door opened)

Note: Parameters provided in table are design parameters. Because of the various reasons, there will be a slight deviation between actual dimension and design parameter. The data listed are only for reference.

Operation

Starting up and temperature regulation

- Insert the plug of the connection lead into the plug socket with protective earth contact. When the refrigerator compartment door is opened, the internal lighting is switched on. After the fridge has been placed in position, wait for 5 minutes before electricity is supplied. Don't store anything until the temperature inside the fridge becomes low enough.
- The temperature selector knob is located on the top of the refrigerator compartment.

Setting 0 means:
Off.
Clockwise rotate the knob to turn on the appliance.
Setting 1 means:
Highest temperature, warmest setting.
Setting 7 (end-stop) means:
Lowest temperature, coldest setting.

Important! For optimum food preservation, a medium setting is generally the most suitable if you want the temperature higher or colder, please turn the knob to warmer or colder setting accordingly. When you turn the knob to colder which can lead to the more energy efficiency -Otherwise,it would result the energy consuming.

NOTE: High temperature setting will acceler ate food waste.

Important! High ambient temperatures (e.g. on hot summer days) and a cold setting (position 6 to 7) may cause the compressor to run continuously or even non-stop!
Reason: when the ambient temperature is high, the compressor must run continuously to maintain the low temperature in the appliance.

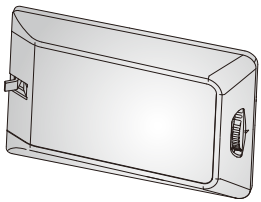

Changing the LED light

Warning! If the LED light is damaged. DO NOT CHANG IT BY THE USER!
Changing the LED light carried out by inexperienced persons may cause injury or serious malfunctioning. It must be replaced by a qualified persons in order to avoid a hazard. Contact your local Service Force Center for help.

- Before changing the LED light, switch off the appliance and unplug it, or pull the fuse or the circuit breaker.
- LED light data: 220-240V , LED MAX.1.5W.
- To switch off the appliance, set the temperature regulator to position "0".
- Unplug the mains plug.
- Press the Lampshade, and slide it backwards.
- To change the LED light, undo the screw.
- Remove the bulb fixed block, change the defective LED light.
- Refit the bulb fixed block,the Lampshade and the screw.
- Put the refrigerator back into operation.

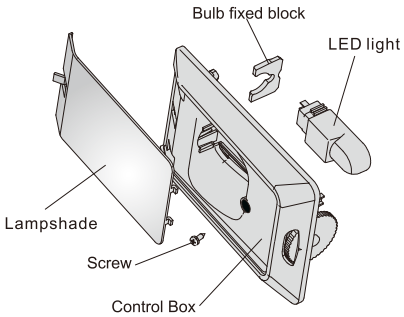

Using your appliance

Accessories 1)
Movable shelves/trays

- Various glass, plastic storage shelves or wire trays are included with your appliance-different models have different combinations and different models have different features.
- The walls of the refrigerator are equipped with a series of runners so that the shelves can be positioned as desired.

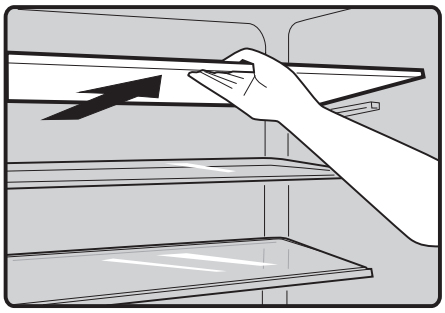

Positioning the door shelves

- To permit the storage of food packages of various sizes, the door shelves can be placed at different heights.
- To adjust, gradually pull the shelf in the direction of the arrows until it comes free, then reposition as required.

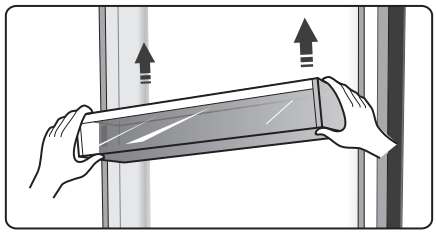

Bottle rack (optional)

- It is for storing bottled wine or drinks, and it can be taken out to clean.

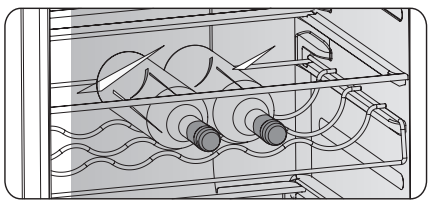

Vegetable Drawer

- For storing fruit and vegetables.

Freezer Drawer

- For storing frozen food.

Ice-cube tray

- For making ice and storing ice-cubes.

Refrigerator compartment 2)

- For storing food that does not need to be frozen and different sections suitable for different kinds of food.

Freezer food compartment 2)

- For freezing fresh food and storing frozen and deep-frozen food for long periods of time.

Thawing food 2)

- In the refrigerator compartment.
- At room temperature.
- In a microwave oven.
- In a conventional or convection oven.
- Food once thawed should not be re-frozen.

1) If the appliance contains related accessories and functions.
2) If the appliance contains a freezer compartment.

Water Dispenser

The water dispenser, located in the fridge door, is for storing drinking water. With this appliance you can obtain chilled water easily without opening the refrigerator. You should review of following tips.

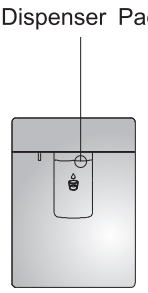

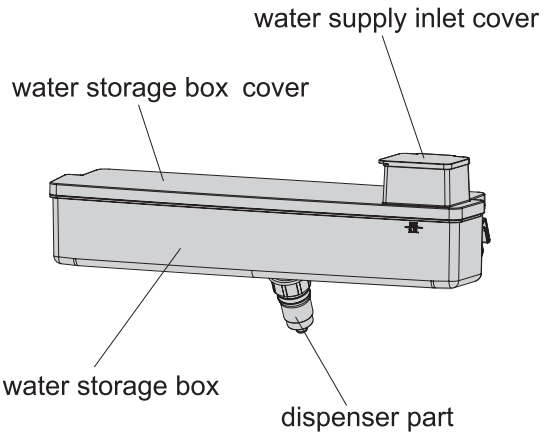

Before using

●Before using this appliance for the first time, you should use it based on following instructions.

1. Hold the two sides of the water tank tightly, then pull up the water tank by shaking up and down.
2. Unscrew the head, then clean it and the inside of water tank.

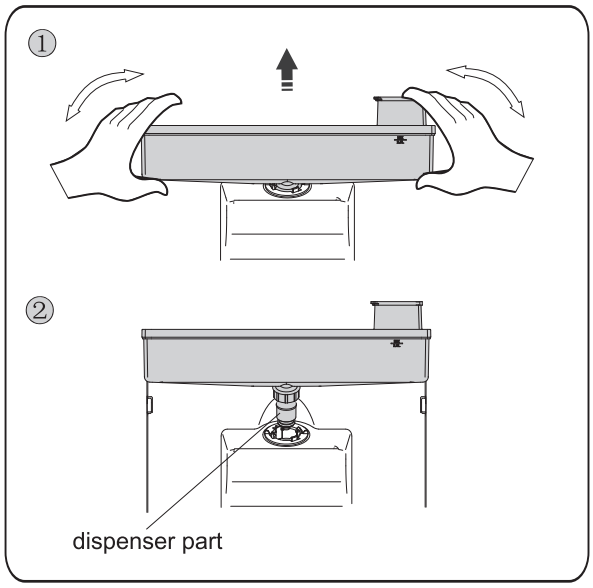

Assembling

●Before assembling, please drain the water inside the tank, and check whether the washer is reversed or not.

1.Insert the head into the hole.
2.Fit the tank along the guides on the door.
3.Press down on the two side of the tank.
4.When you hear a click sound, that means the installation is completed.

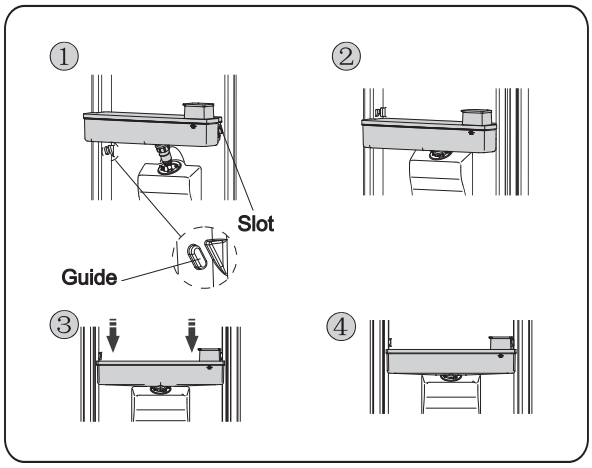

Warning!

1.Be careful not to press on the head.
2.When fitting the water tank, ensure the head inserted into the hole first.

Filling water

1. Open the water supply inlet cover from the left side.
2. Fill the water.

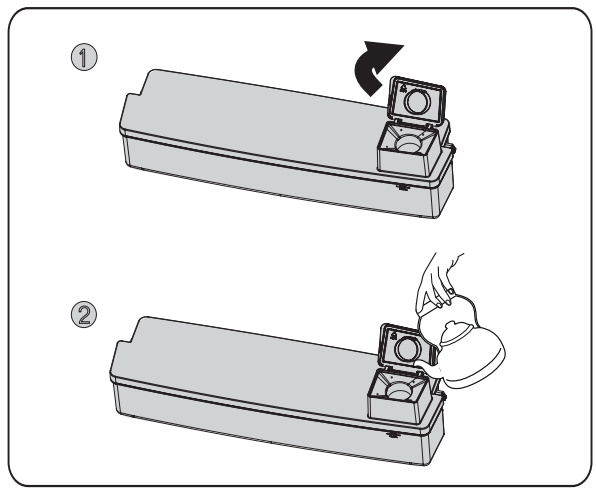

Caution!

●Fill with water up to 2.5L (which is suggested), and not above the level. Otherwise, it may overflow when the lid is close.

●Other beverage（milk, juice, carbonated beverage etc） is not suggested to be used than potable water . Especially beverage including grain must not be used （may result in failure）.

●Hot water can not be filled into the water tank directly.

Warning!

Don't touch other parts of the appliance when filling water, it may cause the water leakage.

Dispensing water

1. Make sure the cover of the water tank is fitted on.
2. Close the fridge door and check the dispenser.

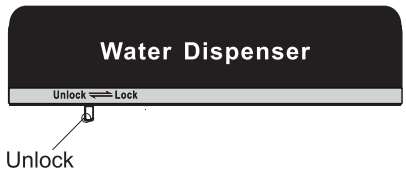

Before you dispense the water, make sure the lock device is on left side,it is meaning unlock situation.

Warning!

The lock is defined as “child lock”.
Don't push the dispenser lever forward strongly, when the dispenser is on right side, it is meaning lock situation, it may damage the mechanism.

Receiving Water

You should use the correct cups to receive water underneath the water dispenser.

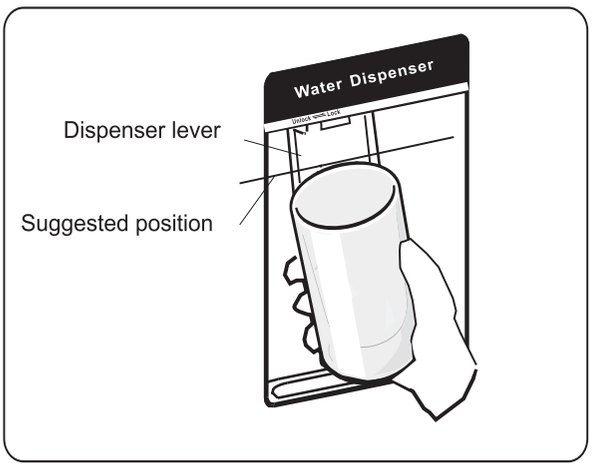

Warning!

Don't push the dispenser lever forward without cup, it may cause the water leak from the dispenser.

Cleaning

1. Put the water tank out of the door carefully, and then wash the tank, lid, and head lightly in water.
2. After you have successfully cleaned the appliance, you should dry it by natural drying or using the dryer.
3.If you have used the water dispenser for many times, the water in the receiving tank may drop on the floor, which may make your floor wet, and you should clean the tank with dry towel regularly before overflow.

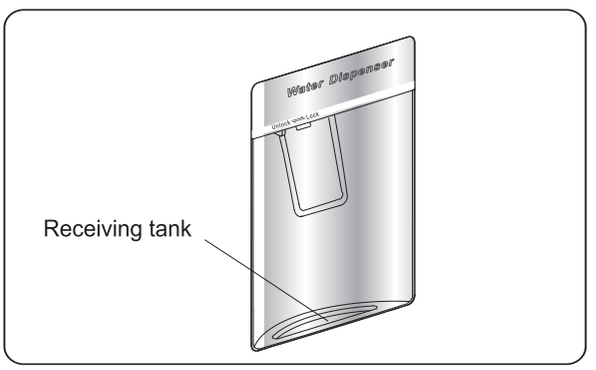

Helpful hints and tips

Energy saving tips

- We recommend that you follow the tips below to save energy.
- Try to avoid keeping the door open for long periods.
- Ensure the appliance is away from any sources of heat (Direct sunlight, electric oven or cooker etc).
- Don't set the temperature colder than necessary.
- Don't store warm food or evaporating liquid in the appliance.
- Place the appliance in a well ventilated, humidity free, room. Please refer to Installing your new appliance chapter.
- If the diagram shows the correct combination for the drawers, crisper and shelves, do not adjust the combination as this is designed to be the most energy efficient conflguration.

Hints for fresh food refrigeration

- Do not place hot food directly into the refrigerator or freezer, the internal temperature will increase resulting in the compressor having to work harder and will consume more energy.
- Cover or wrap food, particularly if it has a strong flavor.
- Place food carefully so that air can circulate freely around it.

Hints for refrigeration

- Meat (All Types) wrap in polythene food: wrap and place on the glass shelf above the vegetable drawer. Always follow food storage times and use by dates suggested by manufacturers.
- Cooked food, cold dishes, etc.: They should be covered and may be placed on any shelf.
- Fruit and vegetables: They should be stored in the special drawer provided.
- Butter and cheese: Should be wrapped in airtight foil or plastic film wrap.
- Milk bottles: Should have a lid and be stored in the door racks.

Hints for freezing

- When first starting-up or after a period out of use, let the appliance run at least 2 hours on the higher settings before putting food in the compartment.
- Prepare food in small portions to enable it to be rapidly and completely frozen and to make it possible to subsequently thaw only the quantity required.
- Wrap up the food In aluminum foil or polyethylene food wraps which are airtight.
- Do not allow fresh, unfrozen food to touch the food which is already frozen to avoid temperature rise of the latter.
- Iced products, if consumed immediately after removal from the freezer compartment, will probably cause frost burns to the skin.
- It is recommended to label and date each frozen package in order to keep track of the storage time.

Hints for the storage of frozen food

- Ensure that frozen food has been stored correctly by the food retailer.
- Once defrosted, food will deteriorate rapidly and should not be re-frozen. Do not exceed the storage period indicated by the food manufacturer.

Switching off your appliance

If the appliance needs to be switched off for an extended period, the following steps should be taken prevent mould on the appliance.

1. Remove all food.
2. Remove the power plug from the mains socket.
3. Clean and dry the interior thoroughly.
4. Ensure that all the doors are wedged open slightly to allow air to circulate.

Cleaning and care

For hygienic reasons the appliance (including exterior and interior accessories) should be cleaned regularly (at least every two months).

Caution! The appliance must not be connected to the mains during cleaning as there is a danger of electrical shock.

Danger of electrical shock! Before cleaning switch the appliance off and remove the plug from the mains socket.

Exterior cleaning

-Wipe the control panel with a clean, soft cloth.

-Spray water onto the cleaning cloth instead of spraying directly on the surface of the appliance. This helps ensure an even distribution of moisture to the surface.

-Clean the doors, handles and cabinet surfaces with a mild detergent and then wiped dry with a soft cloth.

Caution!

-Don't use sharp objects as they are likely to scratch the surface.

-Don't use thinner, car detergent, clorox, ethereal oil, abrasive cleansers or organic solvent such as Benzene for cleaning. They may damage the surface of the appliance and may cause fire.

Interior cleaning

You should clean the appliance interior regularly. Wipe the inside of the fridge freezer with a weak solution of bicarbonate of soda, and then rinse with warm water using a wrung-out sponge or cloth. Wipe completely dry before replacing the shelves and baskets. Thoroughly dry all surfaces and removable parts.

Although this appliance automatically defrosts, a layer of frost may occur on the freezer compartment's interior frequently or kept open too long. If the frost is too thick, choose a time when the supply of food stocks are low and proceed as follows:

1.Remove existing food and accessories baskets,

unplug the appliance from the mains power and leave the doors open. Ventilate the room thoroughly to accelerate the thawing process.
2. When defrosting is completed, clean your freezer as described above.
Caution! Don't use sharp objects to remove frost from the freezer compartment. Only after the interior is completely dry should the appliance be switched back on and plugged back into the mains socket.

Door seals cleaning

Take care to keep door seals clean. Sticky food and drinks can cause seals to stick to the cabinet and tear when you open the door. Wash seal with a mild detergent and warm water. Rinse and dry it thoroughly after cleaning.
Caution! Only after the door seals are completely dry should the appliance be powered on.

Replacing the LED light:

Warning: The LED light should be replaced by a competent person! If the LED light is damaged, contact the customer helpline for assistance.

Defrosting

Why defrosting

- Water contained in food or getting into air inside the fridge be opening doors may form a frost layer inside. It will weaken the refrigeration when the frost is thick. While it is more than 10mm thick, you should defrost.

Defrosting in fresh food storage compartment

- It is automatically controlled by switching the temperature regulator on or off so that there is no need of operation of defrosting. Water from defrosting will be drained into an drip tray through a drain pipe at the back of the fridge automatically.

Defrosting in frozen-food storage compartment

- Defrosting in freezer chamber is operated manually. Before defrosting, take the food out.
- Take the ice tray and food in drawers out or put them into the fresh food compartment temporarily.
- Set the knob of the temperature regulator to position “0”(where the compressor will stop working) and leave the door of the refrigerator open until ice and frost dissolve thoroughly and accumulation at the bottom of the freezer chamber. Wipe off the water with soft cloth.
- In the case of speeding up the process of defrosting, you may put a bowl of warm water (about 50°C) into the freezer chamber, and scrape away the ice and frost with a defrosting spatula. After doing so, be sure to set the knob of the temperature regulator to the original position.
- It is not advisable to heat the freezer chamber directly with hot water or hair dryer while defrosting to avoid deformation of the inner case.
- It is also not advisable to scrape off ice and frost or separate food from the containers which have been congealed together with the food with sharp tools or wooden bars, so as not to damage the inner casing or the surface of the evaporator.

Warning! Switching off the appliance before defrosting, turn the temperature regulator to position “0”.
Important! The fridge should be defrosted at least every one month. During the using process, if the door was opened frequently or using the appliance in the extreme humidity, we advise the user to defrost every two weeks.

Go out of use for a long time

- Remove all refrigerated packages.
- Switch off the appliance by turning the temperature regulator to position “0”.
- Remove the mains plug or switch off or disconnect the electricity supply.
- Clean thoroughly (see section: Cleaning and Care).
- Leave the door open to avoid the build up of odors.

Note: If the appliance contains freezer compartment.

Troubleshooting

If you experience a problem with your appliance or are concerned that the appliance is not functioning correctly, you can carry out some easy checks according to this section before before calling for service.

Warning! Don't try to repair the appliance yourself. If the problem persists after you have made the checks mentioned below, contact a qualified electrician, authorized service engineer or the shop where you purchased the product.

Problem	Possible cause & Solution
Appliance is not working correctly	Check whether the power cord is plugged into the power outlet properly.
	Check the fuse or circuit of your power supply,replace if necessary.
	The ambient temperature is too low. Try setting the chamber temperature to a colder level to solve this problem.
Odours from the compartments	The interior may need to be cleaned
	Some food, containers or wrapping cause odours.
Noise from the appliance	The sounds below are quite normal: ● Compressor running noises. ● Air movement noise from the small fan motor in the freezer compartment or other compartments. ● Gurgling sound similar to water boiling. ● Popping noise during automatic defrosting. ● Clicking noise before the compressor starts.
	Other unusual noises are due to the reasons below and may need you to check and take action: ● The cabinet is not level. ● The back of appliance touches the wall. ● Bottles or containers fallen or rolling.
The motor runs continuously	It is normal to frequently hear the sound of the motor, it will need to run more when in following circumstances: ● Temperature setting is set colder than necessary ● Large quantity of warm food has recently been stored within the appliance. ● The temperature outside the appliance is too high. ● Doors are kept open too long or too often. ● After your installing the appliance or it has been switched off for a long time.
A layer of frost occurs in the compartment	Ensure food is placed within the appliance to allow sufficient ventilation. Ensure that door is fully closed. To remove the frost, refer to cleaning and care chapter.

Temperature inside is too warm	You may have left the doors open too long or too frequently; or the doors are kept open by some obstacle; or the appliance is located with insufficient clearance at the sides, back and top .
Temperature inside is too cold	Increase the temperature by following the “operation” chapter.
Doors can’t be closed easily	Check whether the top of the refrigerator is tilted back by 10-15mm to allow the doors to self close, or if something inside is preventing the doors from closing.
Water drips on the floor	The water pan (located at the rear bottom of the cabinet) may not be properly leveled, or the draining spout under neath the top of the compressor depot may not be properly positioned to direct water into this pan, or the water spout is blocked. You may need to pull the refrigerator away from the wall to check the pan and spout.
The light is not working	● The light may be damaged. Refer to replace lights in operation chapter.

Disposal of the appliance

It is prohibited to dispose of this appliance as household waste.

Packaging materials

Packaging materials with the recycle symbol are recyclable. Dispose of the packaging into a suitable waste collection container to recycle it.

Before disposal of the appliance

1. Pull out the mains plug from the mains socket.
2. Cut off the power cord and discard with the mains plug.

Warning! Refrigerators contain refrigerant and gases in the insulation. Refrigerant and gases must be disposed of professionally as they may cause eye injuries or ignition. Ensure that tubing of the refrigerant circuit is not damage prior to proper disposal.

	Correct Disposal of this product
	This symbol on the product or in its packing indicates that this product may not be treated as household waste. Instead, it should be taken to the appropriate waste collection point for the recycling of electrical and electronic equipment. By ensuring this product is disposed of correctly, you will help prevent potential negative consequences for the environment and human health, which could otherwise be caused by the inappropriate waste handling of this product. For more detailed information about the recycling of this product, please contact your local council your household waste disposal service, or the shop where you purchased the product.

To avoid contamination of food, please respect the following instructions

- Opening the door for long periods can cause a significant increase of the temperature in the compartments of the appliance.
- Clean regularly surfaces that can come in contact with food and accessible drainage systems.
- Clean water tanks if they have not been used for 48 h.
- Store raw meat and fish in suitable containers in the refrigerator, so that it is not in contact with or drip onto other food.
- Two-star frozen-food compartments are suitable for storing pre-frozen food, storing or making icecream and making ice cubes.
- One-, two- and three-star compartments are not suitable for the freezing of fresh food.
- If the refrigerating appliance is left empty for long periods, switch off, defrost, clean, dry, and leave the door open to prevent mould developing within the appliance.

Order	Compartments TYPE	Target storage temp.[℃]	Appropriate food
1	Fridge	+2 ~+8	Eggs, cooked food, packaged food, fruits and vegetables, dairy products, cakes, drinks and other foods are not suitable for freezing.
2	(***)*-Freezer	≤-18	Seafood (fish, shrimp, shellfish), freshwater aquatic products and meat products (recommended for 3 months, the longer the storage time, the worse the taste and nutrition), suitable for frozen fresh food.
3	***-Freezer	≤-18	Seafood (fish, shrimp, shellfish), freshwater aquatic products and meat products (recommended for 3 months, the longer the storage time, the worse the taste and nutrition), are not suitable for frozen fresh food.
4	**-Freezer	≤-12	Seafood (fish, shrimp, shellfish), freshwater aquatic products and meat products (recommended for 2 months, the longer the storage time, the worse the taste and nutrition), are not suitable for frozen fresh food.
5	*-Freezer	≤-6	Seafood (fish, shrimp, shellfish), freshwater aquatic products and meat products (recommended for 1 months, the longer the storage time, the worse the taste and nutrition), are not suitable for frozen fresh food.
6	0-star	-6 ~0	Fresh pork, beef, fish, chicken, some packaged processed foods, etc. (Recommended to eat within the same day, preferably no more than 3 days) . Partially encapsulated processed foods (non-freezable foods)
7	Chill	-2 ~+3	Fresh/frozen pork, beef, chicken, freshwater aquatic products, etc.(7 days below 0 ℃ and above 0 ℃ is recommended for consumption within that day, preferably no more than 2 days). Seafood (less than 0 for 15 days, it is not recommended to store above 0 ℃)

8	Fresh Food	0 ~+4	Fresh pork, beef, fish, chicken, cooked food, etc. (Recommended to eat within the same day, preferably no more than 3 days)
9	Wine	+5 ~+20	red wine,white wine,sparkling wine etc.

Note: please store different foods according to the compartments or target storage temperature of your purchased products.

- If the refrigerating appliance is left empty for long periods, switch off, defrost, clean, dry, and leave the door open to prevent mould developing within the appliance.

Water dispenser cleaning (special for water dispenser products):

- Clean water tanks if they have not been used for 48 h; flush the water system connected to a water supply if water has not been drawn for 5 days.

Fridgemaster Technical Helpline and Service Centre - Telephone

0191 387 0804

fridgemaster

FRIDGEMASTER
Unit 2 Meadow Court
Millshaw Lane Leeds,
West Yorkshire,
LS11 8LZ,
United Kingdom

For further information please contact the Fridgemaster Technical Helpline on:
0191 387 0804

Fridgemaster@0800repair.com



This symbol on the product or in the instructions means that your electrical and electronic equipment should be disposed at the end of its life separately from your household waste. There are separate collection systems for recycling in the EU.
For more information, please contact the local authority or your retailer where you purchased the product.

CE