Operating and Installation Instructions
Fridge-freezer Combination



It is **essential** to read the operating and installation instructions before
setup, installation, and commissioning.
This prevents both personal injury and damage to the appliance.

en - US, CA

M.-Nr. 12 186 580

Contents

IMPORTANT SAFETY INSTRUCTIONS 5
Caring for the environment 16
Installation 17
Location 17
Climate class 18
Installation niche 18
Niche floor 18
Adjacent furniture/units 18
Door hinge 18
Proper ventilation 19
Opening angle of the door 22
Plumbing 24
Inset installation 25
Frameless installation 26
Installing the Appliance 27
Installing the anti-tip brackets 27
Fastening the covers 29
Pushing the appliance into the niche 30
Aligning the appliance 30
Securing the appliance in the niche 31
Aligning the appliance door 31
Aligning the drawer front 32
Install the base cover with the ventilation slits 32
Removing the mounting rails 34
Installing the mounting rails on the door panel 35
Installing the door panel on the appliance door 35
Aligning the door panel 36
Installing the door panels on the freezer drawers 39
Water connection 40
Electrical connection 44
Guide to the Appliance 46
How to save Energy 48
Turning the Appliance On / Off 51
The Right Temperature 53
. . . in the refrigerator 53
Automatic cold air circulation (DynaCool) 53

Contents

. . . in the freezer 53
Temperature display 53
Setting the temperature for the refrigerator and freezer 53
Using SuperCool in the refrigerator section 56
Using SuperCool in the freezer section 57
Temperature and DoorAlarm 58
Additional Settings 60
Sabbath mode S 60
Safety lock c 61
Temperature unit (Fahrenheit or Celsius) o 62
Brightness of the display h 63
Lower hinge heating control H 64
Using the Refrigerator Efficiently 65
Different storage zones 65
Arranging the Interior - Refrigerator Section 67
Freezing and Storing Food 69
Maximum freezing capacity 69
Freezing fresh food 69
Placing food in the freezer 69
Thawing frozen foods 70
Cooling drinks quickly 70
Making Ice Cubes 71
Turning the ice cube maker On 71
Setting the water quantity for the ice cube tray E 72
Arranging the Interior - Freezer Section 74
Freezer drawers 74
Adjusting the separators 74
Removing the freezer drawer containers 75
Defrosting 76

Contents

Cleaning and Care 77
Cleaning agents. 77
Before cleaning 78
Cleaning the interior and accessories 78
Door seal 78
Ventilation slits 78
Cleaning the air filter 79
Resetting the air filter indicator 80
Frequently asked questions 81
Noises 89
After sales service 90
Warranty 90

IMPORTANT SAFETY INSTRUCTIONS

This refrigeration appliance complies with current safety requirements. Inappropriate use can, however, lead to personal injury and material damage.

Please read the operating and installation instructions carefully before using the refrigeration appliance for the first time. They contain important information on safety, installation, use, and maintenance. This is to protect yourself from injury, and from damaging your refrigeration appliance.

Miele expressly and strongly advises that you read and follow the instructions in the chapter on installing the refrigeration appliance as well as in the “IMPORTANT SAFETY INSTRUCTIONS”.

Miele cannot be held liable for injury or damage caused by non-compliance with these instructions.

Keep these instructions in a safe place and pass them on to any future owner.

⚠ Risk of injury and damage due to tipping refrigeration appliance.

This refrigeration appliance is very heavy and can tip forwards when the doors are open.

Keep the appliance doors shut until the refrigeration appliance has been built in and secured in its housing in accordance with the Operating and Installation Instructions.

IMPORTANT SAFETY INSTRUCTIONS

Appropriate use

▶ This appliance is intended for use in domestic households and similar residential environments such as
– staff kitchen a eas in shops, offices and other working environments
– farm houses and by clients in ho els, motels and other residential type environments
– bed and b eakfast type environments
– ca ering and similar non-retail applications.
This appliance is not intended for use outdoors, in damp environments or in places exposed to rain.

▶ This appliance is intended for domestic use only for cooling and storing food and drink as well as for storing deep frozen food, freezing fresh food and for making ice. Any other usage is not supported by the manufacturer and could be dangerous.

▶ This refrigeration appliance is not suitable for storing and keeping cool medicines, blood plasma, laboratory preparations, or other similar substances or products that are subject to the Medical Device Directive. Incorrect use of the refrigeration appliance for such purposes may cause deterioration of the items stored. The refrigeration appliance is also not suitable for use in areas where there is a risk of explosion.
Miele cannot be held liable for damage resulting from incorrect or improper use or operation.

▶ This refrigeration appliance may only be used by people (including children) with reduced physical, sensory, or mental capabilities or lack of experience and knowledge if they are supervised while using it.
The refrigeration appliance may only be used by these people without supervision if they have been shown how to use it in a safe way and recognize and understand the consequences of incorrect operation.

Safety with children

▶ Children should be supervised in the vicinity of the appliance.

▶ Children ages eight and up may only use the appliance even without supervision if they have been shown how to use it in a safe manner, and if they are able to recognize and understand the potential risks of improper use.

▶ Children must not clean or service the appliance unless they are under supervision.

▶ To reduce the risk of injury, do not allow children to play in, on or near the appliance.

▶ The door hinges can cause injury. Keep children well away at all times.

▶ Ensure that any packing material is disposed of safely and kept out of the reach of children. DANGER of suffocation!

IMPORTANT SAFETY INSTRUCTIONS

Technical safety

▶ The coolant circuit has been checked for leaks. The refrigeration appliance complies with statutory and regulatory requirements.



▶ The symbol is located on the compressor and indicates the danger of inflammable materials. Do not remove the label.

WARNING! This refrigeration appliance contains the refrigerant Isobutane (R600a), a natural gas which is environmentally friendly, but flammable. Although it is combustible, it does not damage the ozone layer and does not contribute to the greenhouse effect.
The use of this refrigerant has, however, led to a slight increase in the noise level of the appliance. In addition to the noise of the compressor, you might be able to hear the refrigerant flowing around the cooling circuit. Unfortunately, this cannot be avoided, but it does not affect the performance of the refrigeration appliance.
WARNING! When transporting and installing the refrigeration appliance, ensure that no parts of the cooling circuit are damaged. Splashes of refrigerant can damage the eyes.
In the event of damage:

- Avoid open flames or anything which creates a spark.
- Disconnect the refrigeration appliance from the power supply.
- Ventilate the room where the refrigeration appliance is located for several minutes.
- Contact Miele Customer Service.

▶ The more refrigerant there is in a refrigeration appliance, the larger the room it should be installed in. In the event of a leakage, if the appliance is in a small room, there is the danger of a combustible gas/air mixture building up. For every 8 g of refrigerant, at least 3' 3" (1 m)^3 of room space is required. The amount of refrigerant in the refrigeration appliance is stated on the data plate inside the appliance.

▶ To avoid the risk of damage to the appliance, make sure that the connection data (fuse rating, frequency and voltage) on the data plate corresponds to the household supply.
Check that this is the case before connecting the appliance. Consult a qualified electrician if in any doubt.

▶ The electrical safety of the appliance can only be guaranteed when correctly grounded. It is essential that this standard safety requirement is met. If in any doubt please have the electrical installation tested by a qualified electrician.

▶ Temporary or permanent operation on an autonomous power supply system or a power supply system that is not synchronized with the grid power supply (e.g., island networks, back-up systems) is possible. A prerequisite for operation is that the power supply system complies with national and local codes.
The function and operation of the protective measures provided in the domestic electrical installation and in this Miele product must also be maintained in isolated operation or in operation that is not synchronized with the grid power supply, or these measures must be replaced by equivalent measures in the installation.

▶ If the power cord is damaged, it must be replaced by a Miele authorized technician in order to protect the user from harm.

▶ Do not connect the appliance to the electrical supply with a power bar or extension cord. These are a fire hazard and do not guarantee the required safety of the appliance.

IMPORTANT SAFETY INSTRUCTIONS

▶ If moisture gets into electrical components or into the power cord, it could cause a short circuit. Therefore, do not operate the machine in areas where there may be moisture or splashing water (e.g., garages, laundry rooms).

▶ This appliance must not be installed and operated in mobile installations (e.g. on a ship).

▶ Do not use a damaged appliance. It could be dangerous. Check the appliance for visible signs of damage.

▶ For safety reasons, this appliance may only be used after it has been built in.

▶ The machine must be disconnected from the power supply during installation, maintenance, and repair work, and installation work on the fresh water connection. The machine is only completely isolated from the power supply when:

- the fuses have been switched off, or
- the circuit breaker has been removed completely, or
- the power cord has been unplugged. Pull on the plug and not on the power cord when disconnecting it from the power supply.

▶ Unauthorized installation, maintenance, and repairs, or a faulty fresh water connection can cause considerable danger for the user. Installation, maintenance, and repairs, installation work on the fresh water connection, and all repairs on the ice/water outlet must only ever be carried out by a Miele authorized technician.

▶ Any manufacturer's warranty may be void if the appliance is not repaired by a Miele approved service technician.

▶ Faulty components must only be replaced by genuine Miele replacement parts. Miele can only guarantee the safety standards of the appliance when Miele replacement parts are used.

▶ Miele cannot be held liable for damage caused by a faulty connection to the fresh water supply.

▶ The ice cube maker must only be connected to a cold water line.

Proper installation

▶ Four people are required to install the refrigeration appliance.

▶ Only install the refrigeration appliance in a solid, rectangular, and level housing unit, positioned on an even and level floor.

Correct use

▶ This refrigeration appliance is designed for use within specific ambient temperatures (climate range). Do not use in ambient temperatures for which it is not designed. The climate range is stated on the data plate in the interior cabinet of the refrigeration appliance. A lower ambient temperature will cause the compressor to switch off for longer periods, meaning that the refrigeration appliance is unable to maintain the required temperature.

▶ WARNING! DANGER of overheating! Do not cover or block the air vents. This can impair the efficiency of the appliance, increase the power consumption and cause damage to the appliance.

▶ If storing food which contains a lot of fat or oil in the appliance, make sure that it does not come into contact with plastic components as this could cause stress cracks or break the plastic.

▶ Risk of fire and explosion. Do not store any explosive materials or products containing flammable propellants (e.g., spray cans) in the appliance. Electrical components can cause flammable mixes of gases to ignite.

▶ WARNING! Risk of explosion. Do not operate any electrical equipment (e.g., an electric ice-cream maker) inside the refrigeration appliance. Risk of sparking and explosion.

▶ Risk of injury and damage. Do not store cans or bottles containing carbonated drinks or liquids which could freeze in the freezer section. Otherwise they could burst.

IMPORTANT SAFETY INSTRUCTIONS

▶ Risk of injury and damage. When chilling drinks in the freezer section, make sure that bottles are not left in for more than one hour. Otherwise they could burst.

▶ Risk of injury. Never handle frozen food or the metal parts of the appliance with wet hands. Your hands may freeze to the frozen food or to the metal.

▶ Risk of injury. Do not take ice cubes out with your bare hands and never place ice cubes or ice pops in your mouth straight from the freezer section. The very low temperature of the frozen food can cause frost burn to the lips and tongue.

▶ Do not refreeze partially or fully defrosted food. Consume defrosted food as soon as possible, as it will lose its nutritional value and spoil if left for too long. Defrosted food may only be refrozen after it has been cooked.

▶ When eating stored food, there is a danger of food poisoning. Storage times will depend on several factors, including the freshness and quality of the food, as well as the temperature at which it is stored. Observe the manufacturer's “use-by” dates and storage instructions.

▶ Do not lean on the freezer drawers when they are pulled out. This could damage the refrigeration appliance.

Accessories and parts

▶ Use only genuine original Miele parts. If parts or accessories from other manufacturers are used, the warranty may become invalid.

▶ Miele will guarantee to supply functional spare parts for a minimum of 10 years and up to 15 years following the discontinuation of your refrigeration appliance.

Cleaning and maintenance

▶ Do not use any oil or grease on the door seals.
They can cause the seals to deteriorate over time.

▶ WARNING! DANGER of injury and damage! Do not use any mechanical tools or other types of aid which are not recommended by the manufacturer to accelerate the defrosting process.

▶ Never use a steam cleaner to clean the appliance.
The steam can reach the electrical components and cause a short circuit.

▶ Sharp edged or pointed objects will damage the evaporator, causing irreversible damage to the appliance. Do not use sharp edged or pointed objects to

- remove frost or ice,
- separate frozen foods or remove ice trays.

▶ Never place electric heaters or candles in the appliance to defrost it. These can damage the plastic parts.

▶ Do not use defrosting sprays or de-icers, as they could contain substances which could damage the plastic parts or which might cause the build-up of gases and pose a danger to health.

IMPORTANT SAFETY INSTRUCTIONS

Transport

▶ To avoid damage to the appliance, always transport it upright and in its packaging.

▶ Risk of injury and damage. The refrigeration appliance is very heavy and must be transported by two people.

Disposal of your old appliance

▶ DANGER! Risk of child entrapment! Children could become trapped in the refrigeration appliance and could suffocate.

- Remove the appliance door(s).
- Remove the drawers.
- Leave the adjustable shelves in the refrigeration appliance so children cannot climb inside.
- If your old refrigeration appliance has a door lock, destroy it. This will prevent the risk of children playing accidentally locking themselves in and endangering their lives.

▶ Risk of electric shock!

- Cut the electrical plug off the power cord.
- Cut the power cord off the old appliance.

▶ Dispose of them separately from the appliance.

▶ Ensure that the appliance is not stored in the vicinity of gasoline or inflammable gases and liquids during and after disposal.

▶ Risk of fire due to escaping oil or refrigerant!
The refrigerant and oil inside the appliance are flammable. In high enough concentrations, escaping refrigerant or oil may ignite if they come into contact with an external heat source.
During disposal, make sure that the cooling circuit is not damaged in order to prevent refrigerant and oil escaping in an uncontrolled manner (see the data plate for details of the refrigerant).

▶ If your old refrigeration appliance has a door lock, destroy it. This will prevent the risk of children playing accidentally locking themselves in and endangering their lives.

▶ Splashes of coolant can cause damage to the eyes. Be careful not to damage any part of the pipework while awaiting disposal, e.g. by

- puncturing the coolant channels in the evaporator,
- kinking any pipework,
- scratching the surface coating.

Symbol on the compressor (depending on model)

This information is only relevant for recycling. There is no risk during normal operation.



▶ The oil in the compressor can be fatal if swallowed or if it penetrates the airways.

Symbol on the rear of the appliance (depending on model)

This label or a similar one is only relevant for recycling. Do not remove the lable.



▶ This information refers to the foamed-in panels in the door and/or the housing.

Caring for the environment

Disposal of packaging material

The packaging is designed to protect the appliance from damage during transportation. The packaging materials used are selected from materials which are environmentally friendly for disposal and should be recycled.

Ensure that any plastic wrappings, bags, etc. are disposed of safely and kept out of the reach of children. Return the packaging to your dealer.

Disposing of your old appliance

Electronic and electrical appliances contain many valuable materials. They also contain certain materials, compounds, and components which were essential for their correct functioning and safety. These could be hazardous to your health and to the environment if disposed of with general waste or if handled incorrectly. Please do not, therefore, dispose of your old appliance with general waste.

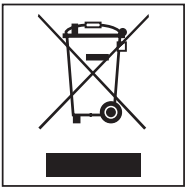

Instead, please make use of officially designated collection and disposal points to dispose of and recycle electrical and electronic appliances. By law, you are solely responsible for deleting any personal data from the appliance prior to disposal.

Take care not to damage your refrigeration appliance's pipework before or during transportation to an authorized collection depot.
This is to ensure that coolant in the cooling circuit and oil in the compressor is contained, and will not leak into the environment.

Please ensure that your old appliance poses no risk to children while being stored for disposal. For additional information, see "IMPORTANT SAFETY INSTRUCTIONS" in these operating and installation instructions.

Safe operation of the appliance is only assured if it has been installed and connected in accordance with these Operating and Installation Instructions.

WARNING!
Danger of tipping! To avoid a hazard secure the appliance in accordance with these instructions.

WARNING!
This appliance is very heavy and can tip forwards when the door / freezer drawers are open. Keep the appliance door shut until the appliance has been installed and secured in the cabinetry in accordance with these Operating and Installation Instructions.
The appliance should be installed with the assistance of another person.

This fridge/freezer combination should not be installed side-by-side with another fridge/freezer combination.
The appliance does not have heated side walls, a side-by-side arrangement can lead to a build-up of condensation water.

Location

The appliance should not be installed directly next to a heat source (such as a range or a heater) or under a window in direct sunlight. The higher room temperature, the more energy the appliance requires to operate. Most suitable is a dry, well-ventilated room.

The following should also be taken into consideration:

– The plug must be easily accessible and not concealed behind the appliance so that the appliance can be quickly disconnected from the electrical supply in an emergency. In addition, no other appliances should be plugged into a socket located directly behind this appliance.

– The power cord must not come into contact with the back of the appliance, it could be damaged by vibrations from the appliance resulting in a short circuit.

Important! When there is high humidity there can be a build-up of condensation on the outer surfaces of the appliance. This can cause the surfaces to corrode.
To prevent this, install the appliance in a dry and/or an air-conditioned room with sufficient ventilation.
Please ensure that doors are closing and sealing properly after installation and that the appliance is installed in accordance with these installation instructions and with the required ventilation openings.

Climate class

The appliance is designed for use within a certain climate range (room temperature range) and should not be used outside this range. The climate range is specified on the data plate inside the appliance.

Climate class	Room temperature
SN	50 °F to 90 °F (+10 °C to +32 °C)
N	61 °F to 90 °F (+16 °C to +32 °C)
ST	61 °F to 100 °F (+16 °C to +38 °C)
T	61 °F to 109 °F (+16 °C to +43 °C)

If the room is too cold, it will cause the cooling system in the appliance to remain off for too long. This can cause the temperature in the appliance to rise, resulting in damage.

Installation niche

Before installing the appliance, the cabinet must be carefully aligned using a level. The cabinet corners must be at a 90° angle to one another, otherwise the cabinet door will not be flush with all 4 corners of the cabinet. The sidewalls of the installation niche must be even.

Niche floor

To ensure that the appliance is installed safely and to assure all the functions, the floor of the niche where the appliance is to be installed must be even and horizontal.

It must be made from strong, rigid material.

The appliance is extremely heavy when fully loaded, and for this reason it is imperative that the floor it stands on is able to bear its weight. If in doubt, contact Miele.

When fully loaded, the approx. weight of the appliance is 1200 lbs (544 kg).

Adjacent furniture/units

The new appliance will be mounted securely to adjacent furniture/fixtures. For this reason, it is essential that all furniture/fixtures be connected securely to the ground and/or wall.

Door hinge

The appliance is supplied with fixed hinges. If the door needs to be hinged on the opposite side, contact Miele.
Do NOT change the door hinging yourself!

Proper ventilation

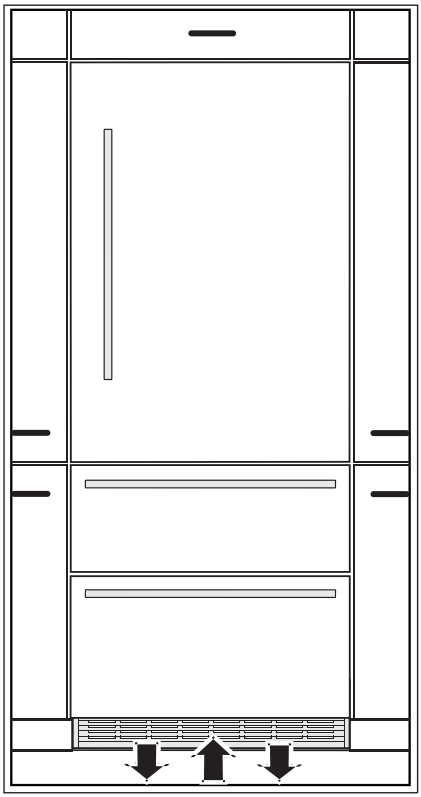

This appliance does not require ventilation openings in the surrounding cabinetry. Proper ventilation is ensured though the ventilation slits at the base of the appliance.

WARNING! Danger of damage from overheating. May restrict operation. Keep ventilation openings, in the appliance enclosure or in the built-in structure, clear of obstruction.

Use only the matching base cover with the ventilation slits!
If there is insufficient ventilation, the compressor will run more often and over a longer period of time. This results in higher energy consumption and a higher compressor temperature which can damage the compressor.

Before installation, ensure the building-in niche is the correct size. The specified ventilation cross-sections must be adhered to in order to ensure the correct functioning of the appliance.

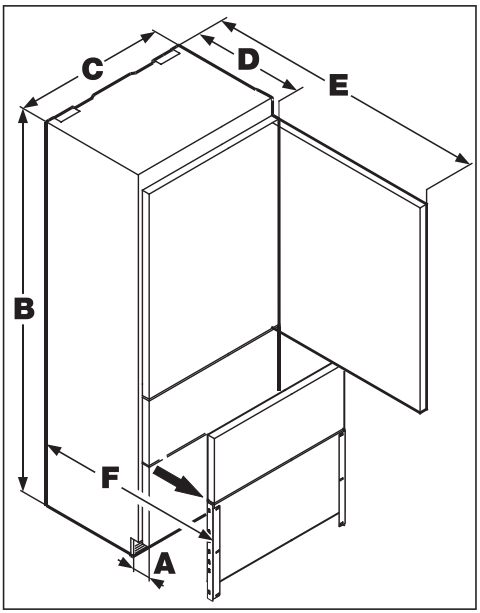

	A	B	C	D	E	F
KFN 9859 iDE	3" (76 mm)	79 13/16" (2,027 mm)	29 13/16" (757 mm)	24" (610 mm)	55 5/8" (1,413 mm)	37 1/2" (952 mm)

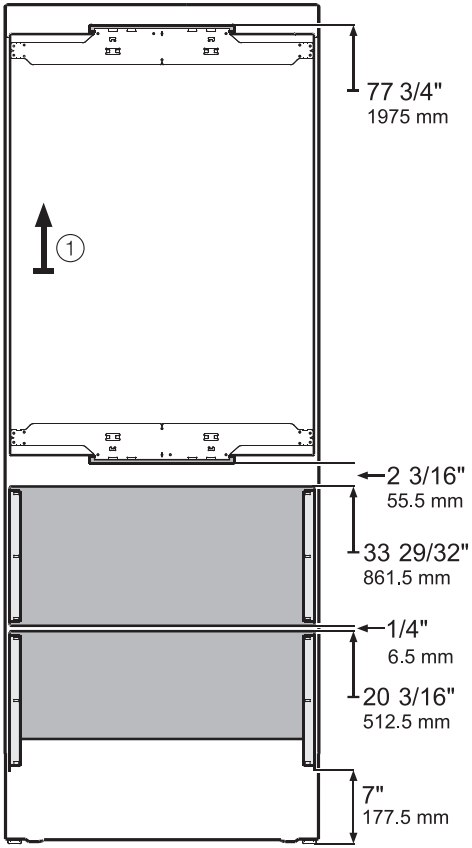

① This dimension line indicates the height measured from the floor.

Opening angle of the door

Ensure that there is sufficient space at the installation location for the door to open wide enough.

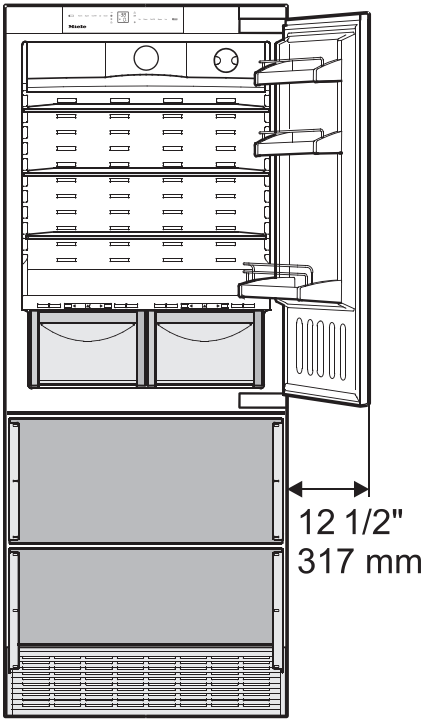

These measurements do not take the cabinet front and the door handle into account; they must be added on accordingly.

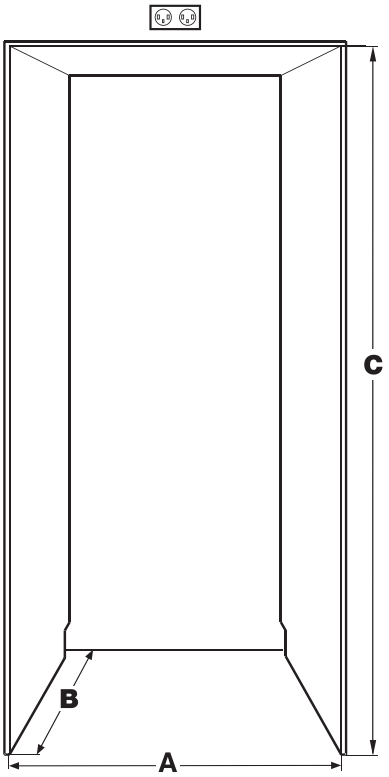

The location of the electrical outlet can be within a radius of 80" from the appliance top center. Do not install the electrical outlet **behind** the appliance!

A Cabinet Width	B Inset cabinet Depth	B Frameless/Face frame cabinet Depth	C Cabinet Height
30" (762 mm)	24" (610 mm) + panel thickness	24" (610 mm)	80" (2,032 mm)

If you wish for the appliance panel to be flush with adjacent cabinetry, the adjacent cabinetry depth must equal appliance depth 24" (610 mm) plus panel thickness 5/8" – 3/4" (16 mm - 19 mm).

Plumbing

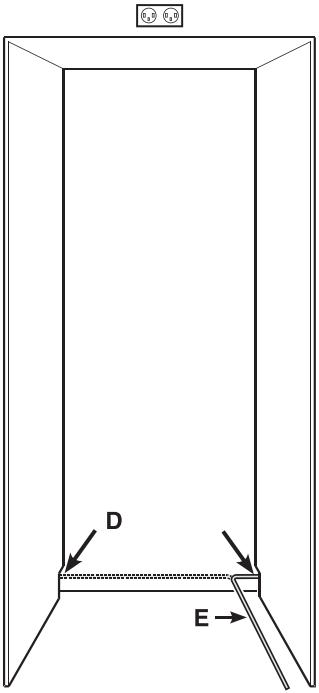

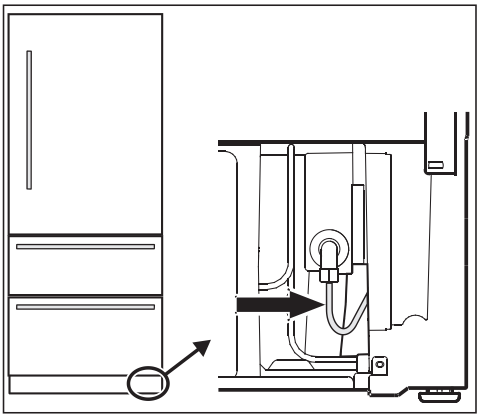

Water line feed-in (**D**) from left or right above the anti-tipping bracket.

Do not install the shut-off valve behind the appliance!

The water line lead-through for the water supply line (**E**) is at the bottom right of the appliance:

Inset installation

Appliance and panels sit fully within the opening and are flush with what could be its own box, between two pantry cabinets or decorative columns, etc. This is the most common installation scenario.

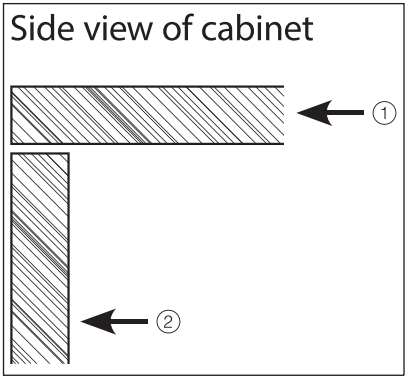

① Cabinet frame

② Door panel

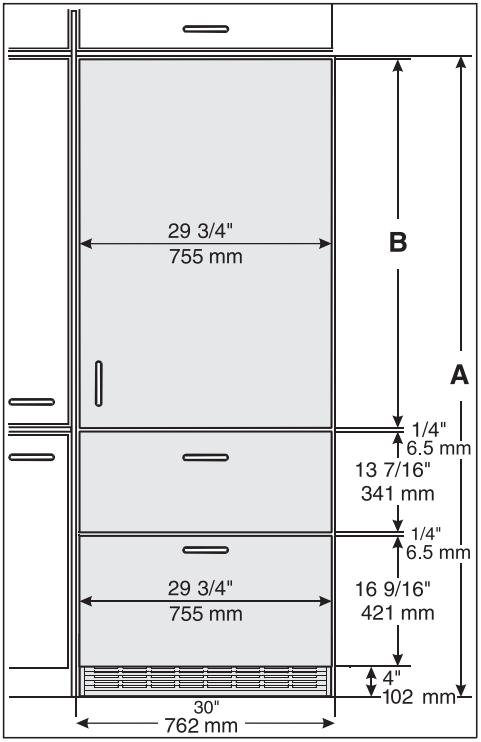

Cabinet opening A	Refrigerator door panel B
80" (2,032 mm)	45 1/4" (1,150 mm)

Stainless steel front panels are available through Miele.

Please take into account the following information concerning the door panel:

– The panels should be at least 5/8" (16 mm) thick to allow the connecting rails to be fastened to them.

– The maximum panel thickness is 3/4" (19 mm).

– The door panel weight must not exceed 60 lb (27 kg).

Frameless installation

With this installation style, wider appliance panels partially overlay the shared side gables of adjacent cabinetry so as to mimic the look of a frameless style cabinet.

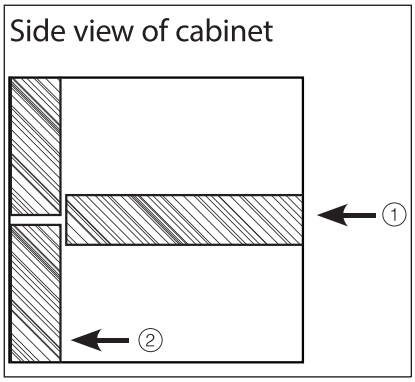

① Cabinet frame

② Door panel

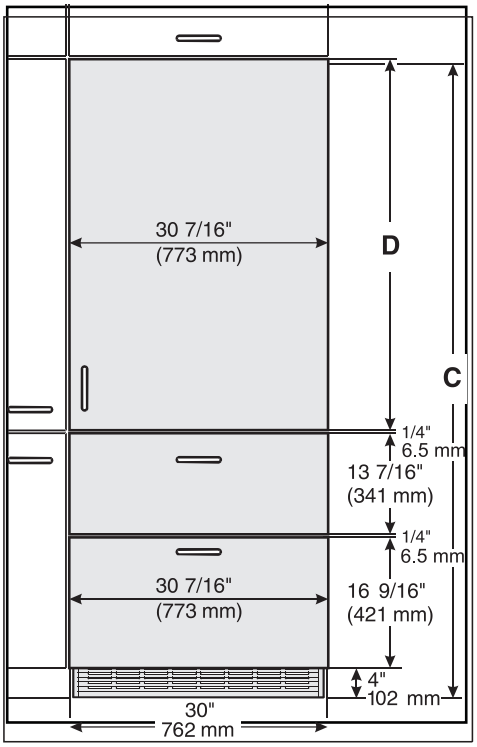

Cabinet opening C	Refrigerator door panel D
80" (2,032 mm)	45 3/4" (1,162 mm)

Please take into account the following information concerning the door panel:

- The panels should be at least 5/8" (16 mm) thick to allow the connecting rails to be fastened to them.
- The maximum panel thickness is 3/4" (19 mm).
- The door panel weight must not exceed 60 lb (27 kg).

Installing the Appliance

⚠ Warning!
This appliance is very heavy and can tip forwards when the door is open.

- Before installation, take any accessories out of the appliance and/or off the back of the appliance.
- Remove any cable clips from the back of the appliance.
- Check that all the parts on the back of the appliance can move freely. Carefully bend any attached components out of the way.

To protect the floor from damage when installing the appliance,

- fasten a left-over piece of flooring (e.g. linoleum) to the floor in front of the installation area.

Installing the anti-tip brackets

The anti-tip brackets keep the appliance safely secured in the installation niche and prevent tipping.

Make sure that there is no plumbing or electrical in the installation area that could be damaged by screws.

⚠ Important!
The anti tip bracket must be installed at the same height as the toe kick area. If you set the appliance to a higher level by laying spacers underneath, the anti tip bracket must be fitted accordingly.

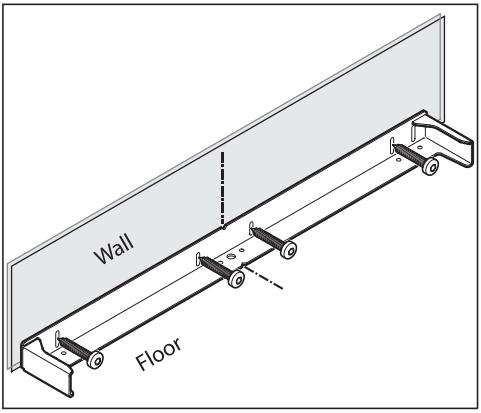

- Mark the center line of the appliance on the back wall of the installation niche. The center of the anti-tip bracket must be aligned with this line.

■ Depending on the floor and walls of the room, select the installation method for the bracket from the following options: A, **B**, **C** or **D**.

A

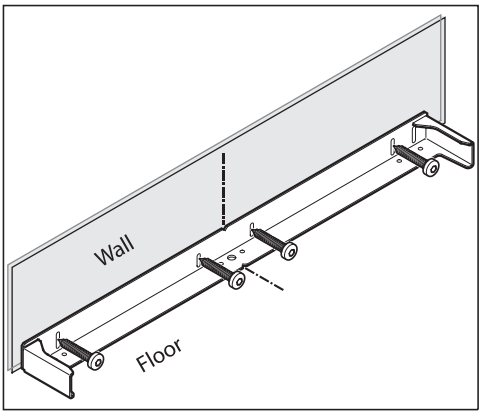

– Securing to a drywall base (screws: 1/4'' x 2 1/2'') (6 x 63 mm)

– Securing to a concrete wall using screw anchors (screws: 1/4'' x 2 1/2'') (6 x 63 mm)

B

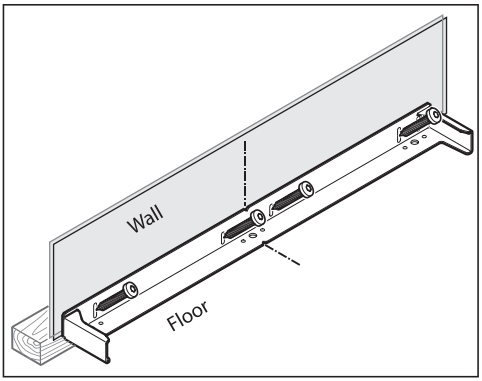

– Securing with angular positioning of the screws (1/4'' x 2 1/2'') (6 x 63 mm)

C

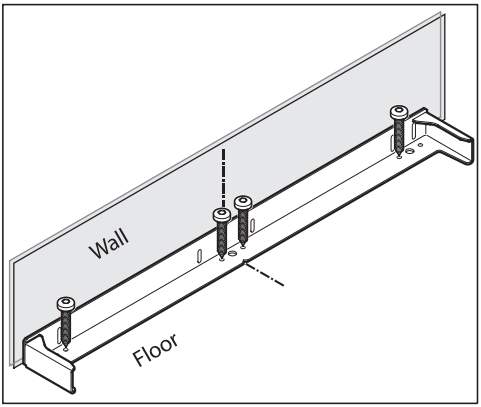

– Securing to a wooden floor (screws: 1/4'' x 2 1/2'') (6 x 63 mm)

D

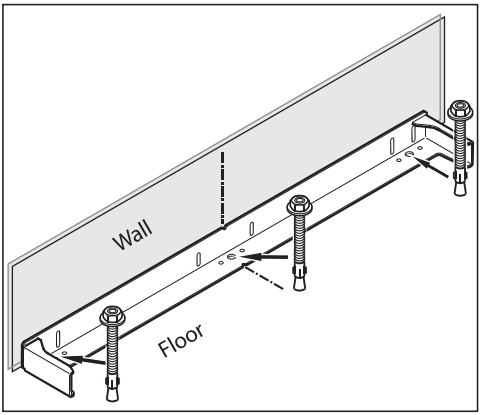

– Securing to a concrete floor using the supplied concrete anchors.

Installation of the anti-tip bracket in a cabinet with a depth greater than 25" (635 mm)

The anti-tip bracket assures proper functioning up to a cabinet depth of 24" - 25" (610-635 mm). If the cabinet is deeper than 25" (635 mm), a wooden spacer is required between the back wall of the niche and the appliance.

The spacer must be secured to the floor.

Position of the spacer in a normal cabinet

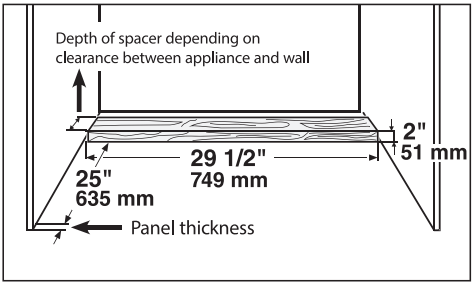

Position of the spacer in a frameless cabinet

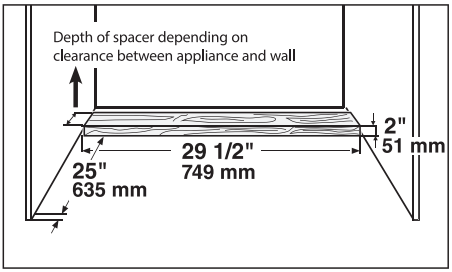

The anti-tip bracket must be level after installation even if the floor is not level. Install the wooden spacer in an appropriate position.

Fastening the covers

Install the adhesive covers above, between and under the mounting plates on the sides of the appliance.

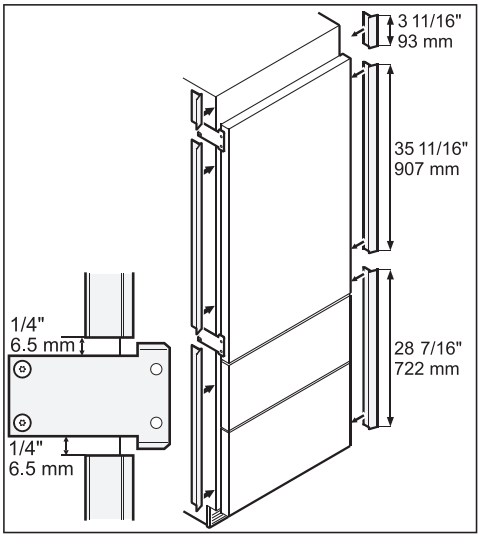

- Cut the covers to the required length (see illustration).
- Fasten the covers keeping a 1/4" (6 mm) clearance from the mounting plates.

Pushing the appliance into the niche

Prepare the water and electrical connections.

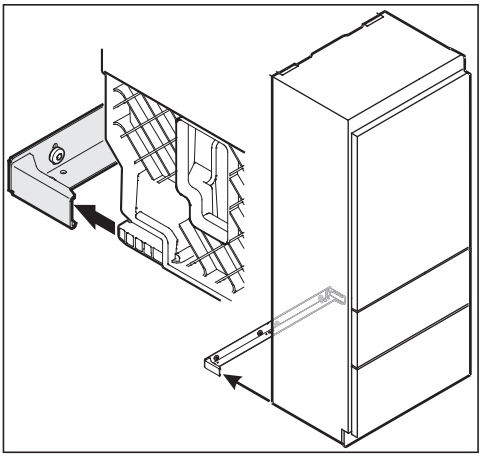

- Gently push the appliance into the niche until the back of the appliance slides into the anti-tip bracket.

Take care not to damage the power cord and plumbing.

Aligning the appliance

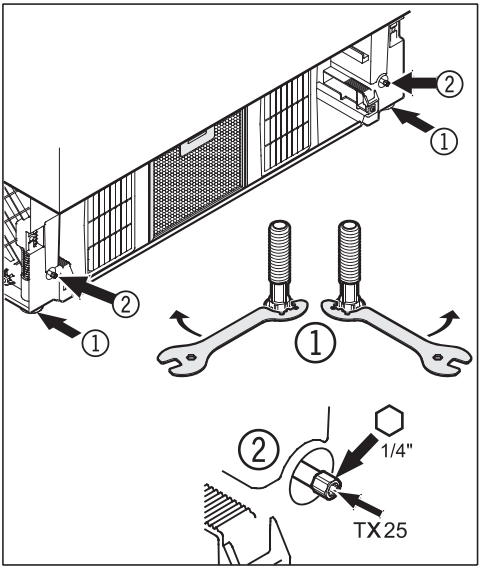

- Use the supplied wrench to adjust the front feet so that the appliance is level ①.
- Using a screw driver or the supplied Allen key, turn the adjustment rods to adjust the back of the appliance until it is level ②.

All feet must rest firmly on the floor so that the appliance cannot tip forwards!

Securing the appliance in the niche

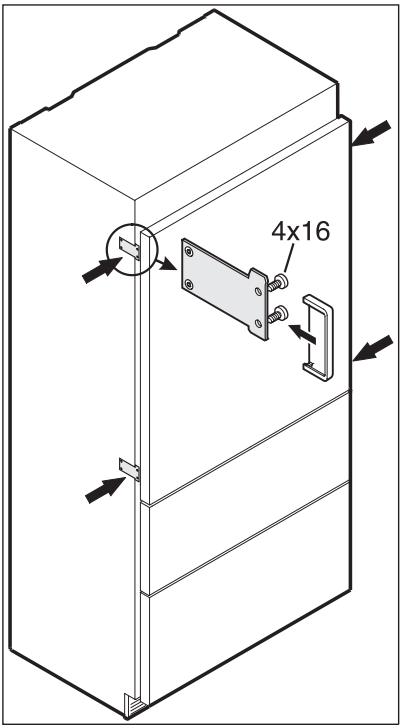

- Push the hinged side of the appliance to the cabinet wall.
- Connect the appliance to the cabinetry by screwing the particle-board screws 1/4" x 3/4" (4 x 16 mm) through the pre-mounted brackets.
- Now attach the covers to the mounting plates.

Aligning the appliance door

The appliance comes with the door properly aligned.
Realignment may be necessary if the door is heavily loaded.

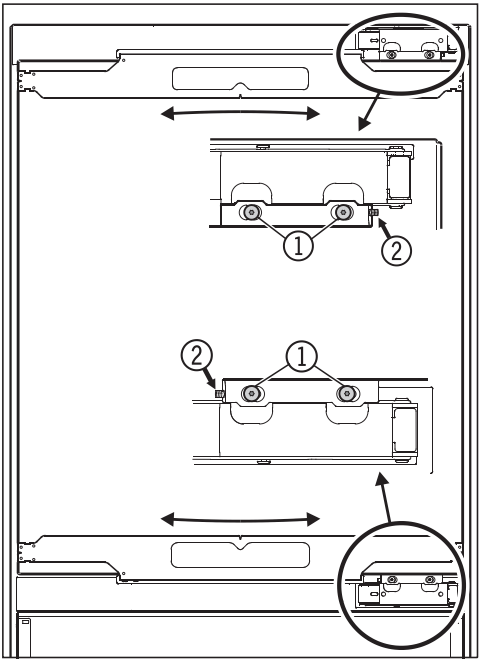

- Loosen the screws ①.
- Align the door by turning the headless screws ② with the supplied Allen wrench.
- Then tighten the screws ①.

Aligning the drawer front

You can adjust the fronts of the freezer drawers if necessary.

Side view of the freezer drawer open

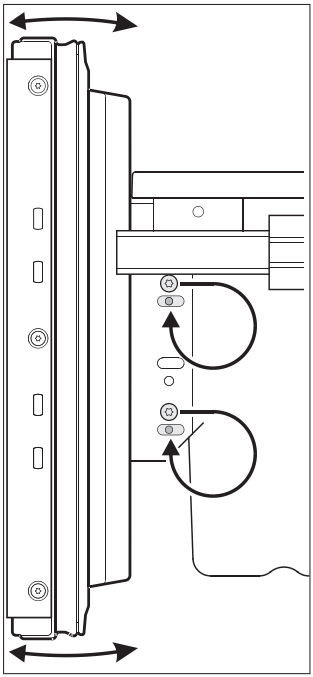

- On both sides, remove the screws and put them in the long holes below.
- Align the drawer front.
- Then tighten the screws.

Install the base cover with the ventilation slits

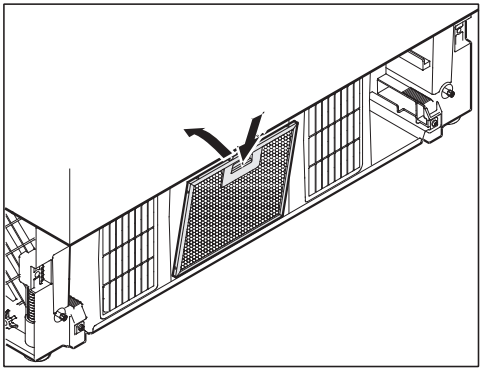

- Remove the lower freezer drawer.
- Remove the blue protective film from the supplied air filter.
- Insert the air filter into the opening in the base. Push the latch down and engage it.

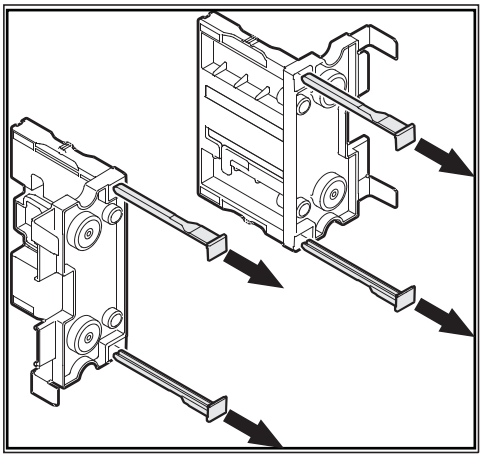

- Remove the locking pins from the supplied retainers.

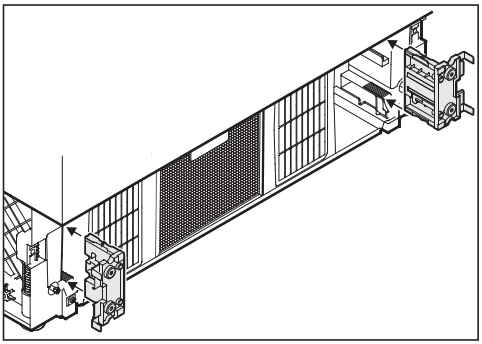

- Insert the base cover retainers on both sides into the appliance housing.

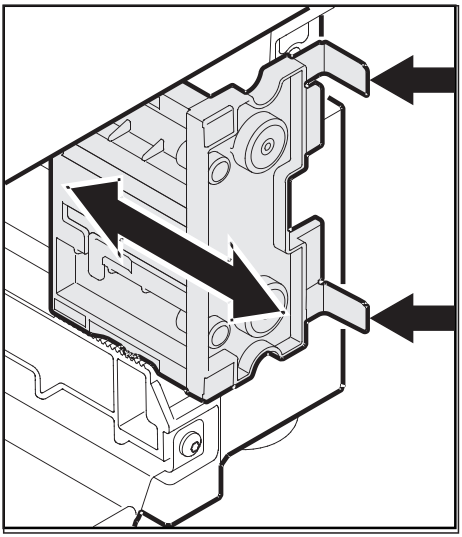

- The face end of the angles on the retainers must be flush with the front of the toe-kick cover. If this is not the case, adjust the retainers according to the depth.

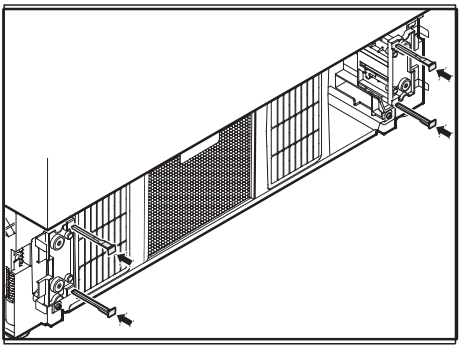

- Insert the locking pins on both sides to secure the retainers in the appliance housing.

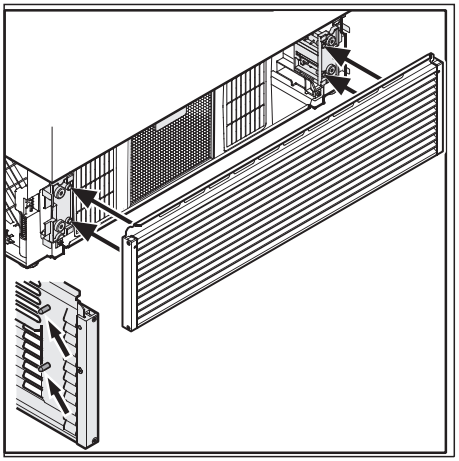

- Now install the base cover with the ventilation slits. There are two fastening bolts on each side of the base cover (see illustration detail). These fastening bolts must be inserted into the retainer holes.

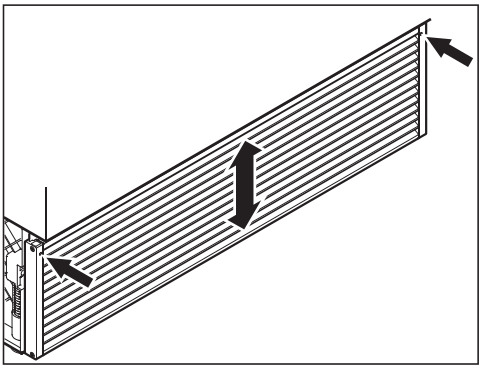

- To adjust the toe-kick height, first loosen the headless screws at the cover front and adjust the cover height.
- Then tighten the headless screws.

Removing the mounting rails

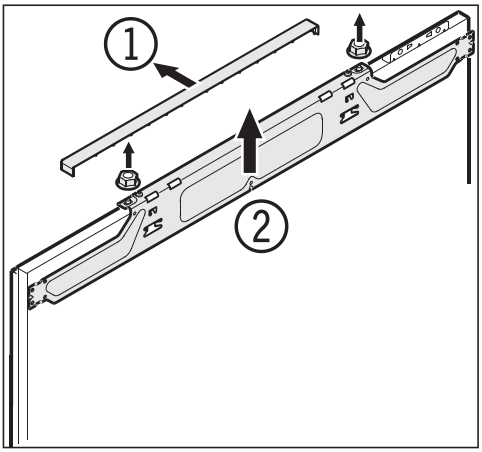

- Remove the cover strip ① and the upper ② and lower mounting rails of the refrigerator door.
- You will need these nuts for fastening the custom door panel to the refrigerator door.

Both mounting rails will later be fastened to the door panel of the refrigerator door.

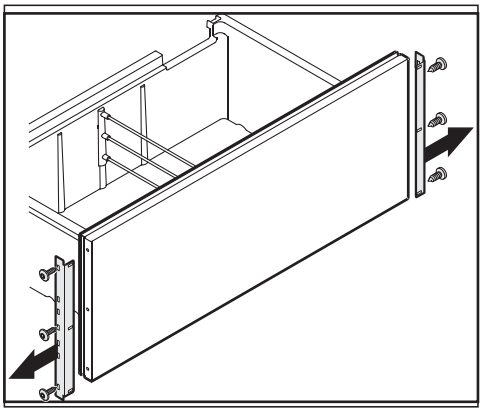

- Remove the cap covers and loosen the screws on both sides.
- Remove the mounting rails on the sides of both freezer drawers.

These mounting rails will later be installed on the door panel of the freezer drawers.

- You will need the nuts for fastening the door panel to the freezer drawers.

Installing the mounting rails on the door panel

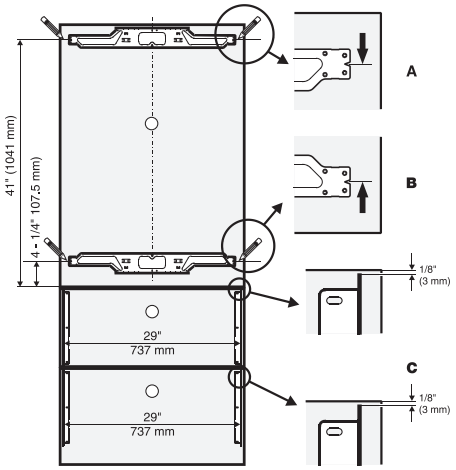

- Using a pencil, draw two thin, horizontal lines on the inside of the door panel for the refrigerator door. The distance from the lower edge of the cabinetry front to the upper line is 41" (1041 mm) and to the lower line it is 4 1/4" (107.5 mm).
- Put both mounting rails on the inside of the door panel ①. Center the mounting rails and align them with the drawn lines (see illustration details A and B).
- Fasten the mounting rails to the door panel with at least 6 screws (1/4" x 5/8'') (4 x 16 mm).
- Put the mounting rails on the inside of the furniture covers for the freezer drawers ②. Align the mounting rails according to the dimensions in illustration detail C.
- Fasten the mounting rails to the door panels with at least 3 screws (1/4'' x 5/8'') (4 x 16 mm).

Installing the door panel on the appliance door

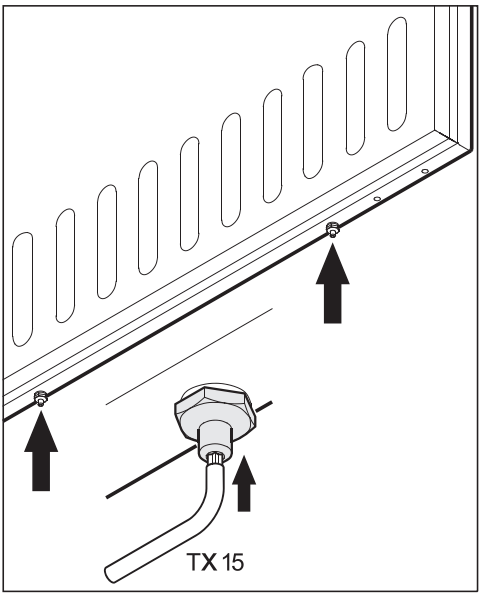

- Screw the adjustment bolts on the lower side of the appliance door as far as possible into the door.

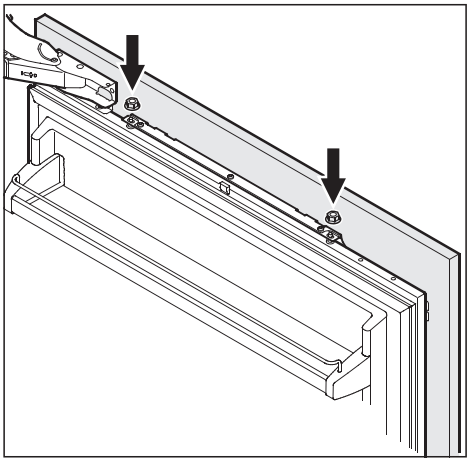

- Open the refrigerator door and hang the door panel from above onto the adjustment bolts.
- Loosely screw the nuts onto the adjustment bolts.
- Close the appliance door and check the distances to the adjacent door panels.

Aligning the door panel

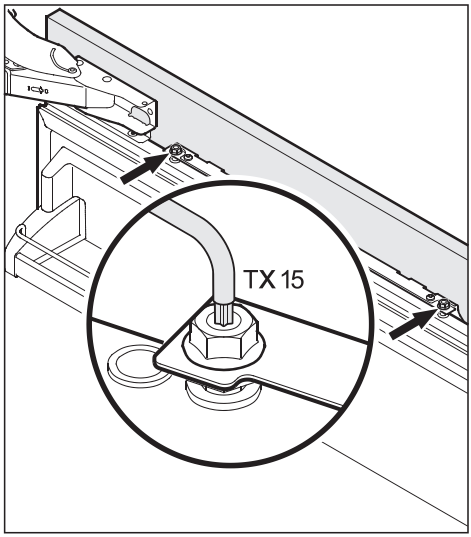

To vertically align the door panel with the adjacent cabinet doors,

- loosen the nuts again and adjust the respective adjustment bolts.

To horizontally align the door panel with the adjacent cabinet doors,

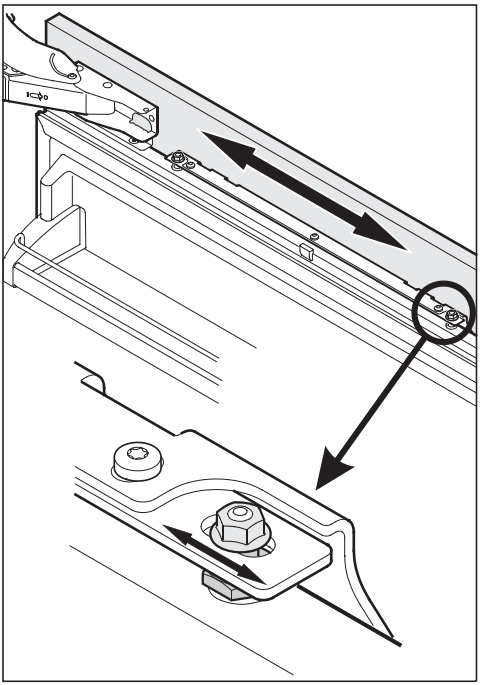

- slide the door panel to the respective side (via the long holes in the mounting rails).
- Tighten the nuts.

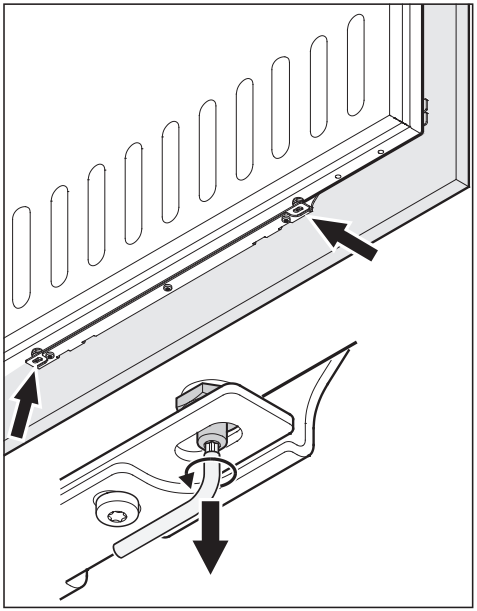

- Tighten the adjustment bolts on the lower side of the appliance door until the mounting rail sits tight on the appliance door.

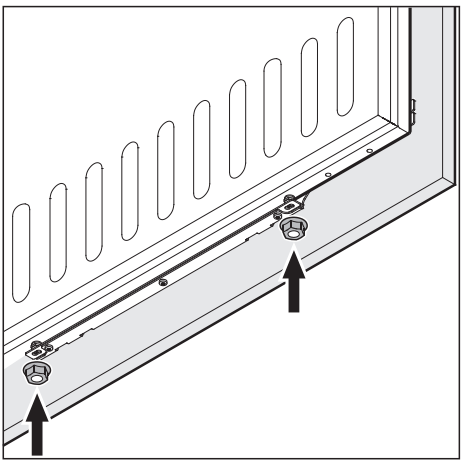

- Screw the nuts onto the adjustment bolts and tighten them.

To adjust the depth of the door panel,

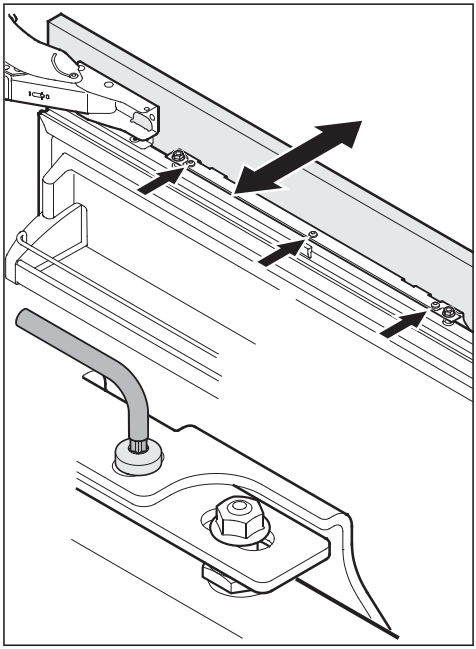

- loosen the three screws located on the upper side of the upper mounting rail. Now you can adjust the depth of the door panel.
- Then tighten the screws.
- If necessary, do the same on the lower mounting rail.

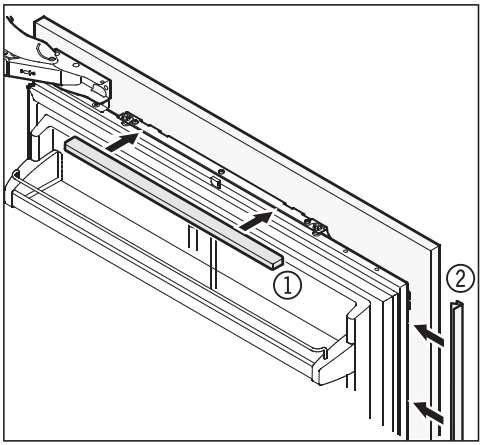

- Attach the upper cover piece ①.
- Attach the supplied seals ② between appliance door and door panel.

Installing the door panels on the freezer drawers

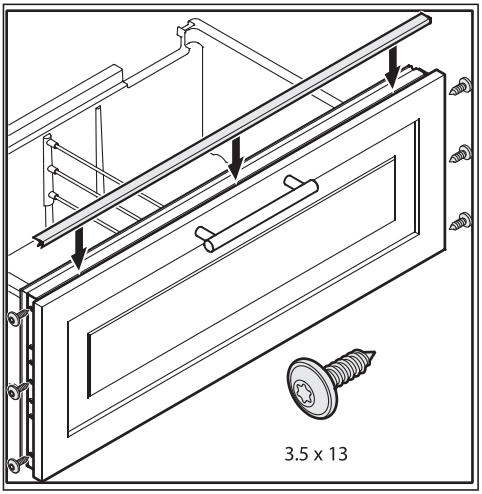

- Pull the upper freezer drawer out and affix both sides of the door panel with the screws 1/8'' x 1/16'' (3.5 x 13 mm).
- Close the freezer drawer and check the distance from the surrounding door panels.

To vertically align the door panel with the adjacent cabinetry doors,

- loosen the screws on both sides and adjust the position of the door panel.
- Then tighten the screws.

Be careful not to over-tighten the screws. Do not use a electric screwdriver.

- Now do the same on the lower freezer drawer.
- When finished, close the gap between the freezer drawer and the door panel with the supplied adhesive seal.
- Remove the protective foil from the adhesive side of the seal and stick the seal onto the upper edge of the freezer drawer. Make sure that the seal is properly positioned in the gap.

Water connection

Information on the plumbed-water connection

⚠ Risk of injury and appliance damage if appliance is not connected properly.
Failing to connect the appliance properly can result in personal injury and/or material damage.
The appliance may only be connected to the plumbed-water connection by qualified specialists.

⚠ Disconnect the refrigeration appliance from the power supply before connecting it to the water supply.
Close the shut-off valve before connecting the refrigeration appliance to the water supply.

⚠ WARNING! Risk to health and risk of damage due to contaminated water!
The quality of the incoming water must conform to the requirements for drinking water in the country where the refrigeration appliance is being used.
Connect the refrigeration appliance to the drinking-water supply.

This appliance meets the requirements of IEC 61770 and EN 61770.

Connection to the water supply must comply with the applicable regulations in the country where the appliance is being installed. All appliances and systems used to supply water to the refrigeration appliance must also comply with the applicable regulations in the respective country.

The appliance is only suitable for connection to a cold water supply, which

- is directly connected to the water supply in order to ensure a circulation of the water in the cold water line.

Avoid using a water line in which the water is allowed to pool. This can affect the taste of water and ice cubes.

- withstands the operating pressure.
- fulfills the hygiene regulations.

Water pressure on-site:

- Minimum: 21.76 psi (1.5 bar)
- Maximum: 87.02 psi (6 bar)

A shut-off valve must be provided between the water line and the water supply of the building to ensure that the water supply can be cut off if necessary.

Make sure that the shut-off valve is still accessible after the appliance has been installed.

⚠ Risk of damage!
If the water supply is cut off while the ice cube maker is still in use the water intake pipe can freeze up.
Turn the ice cube maker off if the water supply is interrupted (e.g. while on vacation).

Connecting the water supply line

Before establishing the plumbed water connection, ensure that the appliance is disconnected from the power supply.

Before the cold water line is used for the first time, it must be vented by a suitably qualified plumber.

The water connection can be found at the front of the appliance:

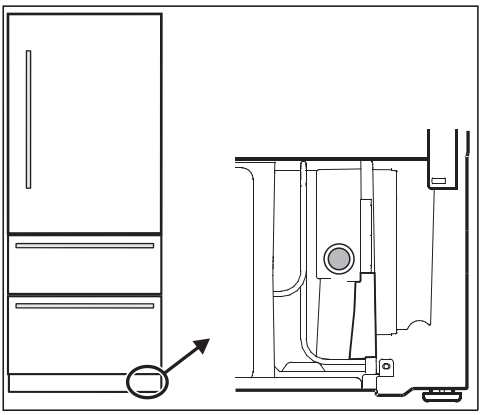

- Gently push the appliance into the desired location. Leave enough space behind the appliance for connecting the water supply.

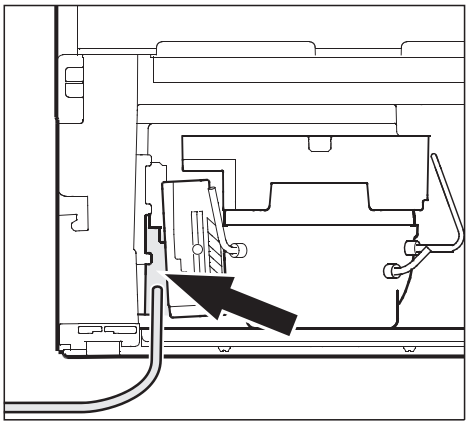

- Lay the water line to the appropriate location at the back of the appliance.
- At the same time feed the electrical cord from the back of the appliance out of the installation niche.

⚠ Do not plug the cord into the outlet until the water connection is completed.

- Gently push the appliance into the niche until the back of the appliance slides into the anti-tip bracket (see "Installing the appliance".)

The solenoid valve ② can be found at the front of the appliance. It has a 3/4" connection thread (the position of the solenoid valve as shown in the picture may differ from your appliance).

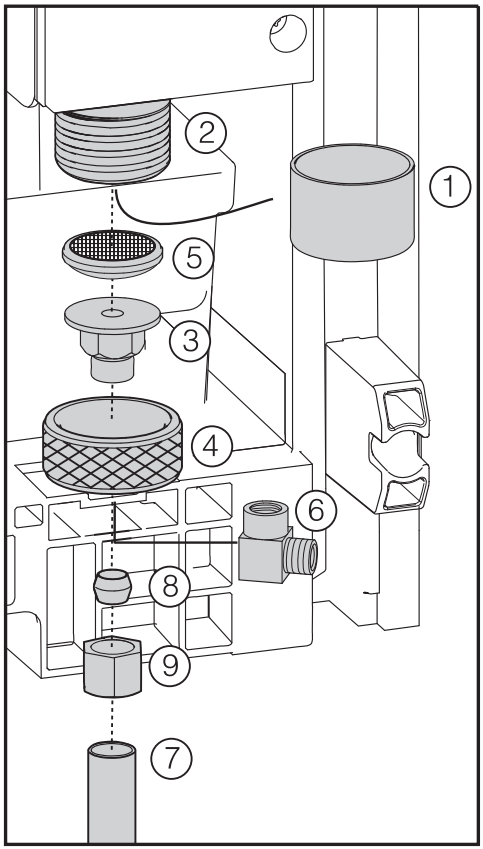

The connection parts included with the appliance permit the connection of various water lines (a water line is not included in delivery).

- Remove the cap ① from the solenoid valve ②.
- Insert the adapter ③ into the union nut ④.

⚠ In the following, please note: inserting the water filter incorrectly can cause damage!

- Place the water filter ⑤ on top of the adapter ③ as shown in the picture.

⚠ Do not over-tighten the union nut, damage can result!

- Connect the union nut ④ to the solenoid valve ② and tighten it.
- If you want to divert the water line by 90°, screw on the elbow ⑥.
- Vent the air from the water line by opening the water supply temporarily.

In case of a water line with a 1/4" thread:

- Connect the water line ⑦ (e.g., copper) using the clamping ring ⑧ and the nut ⑨ on the adapter ③ or elbow ⑥.

In case of a water line with a 7/16" 24-UNS thread:

- Connect the water line ⑦ directly to the adapter ③ or elbow ⑥ (a clamping ring ⑧ and nut ⑨ are not required).
- Slowly open the water shut-off valve and check for leaks.

- The appliance can now be connected to the power supply (see "Electrical connection").
- Slide the appliance into the desired position.

When doing so, make sure that the water line does not get kinked or damaged.

Electrical connection

⚠ Danger of electric shock!
The appliance must only be switched on when it has been installed in accordance with the installation instructions.
Ground the appliance.
The appliance must not be grounded via a gas pipe.
If in doubt, have a suitably qualified and experienced electrician check that the installation complies with relevant regulations.
Do not install a fuse into neutral current or grounding electrical circuit.
Do not use extension cords or ungrounded (two prong) adapters.
Do not use a frayed or damaged power cord.

⚠ Danger of electric shock!
For protection against electric shock this appliance is equipped with a pole-free plug which is protected against reverse polarity. The plug must be grounded in the usual way.
Do not remove the round grounding connector pin from the plug.
Use only a grounded plug adapter.

Wait for 1 hour after installation before plugging the appliance into the power supply. This allows coolant and refrigerator oil to settle in accordance with regulations.

Ensure that the voltage of the main power supply corresponds with the connection voltage of the appliance. A power supply of 110 - 120 V, 60 Hz and 15 Amp (20 Amp for side-by-side installation) with a NEMA 5-15 molded plug, which is protected by a main switch or a fuse, is required to operate the appliance.

The manufacturer recommends operating the appliance on a separate circuit to avoid overloading the electrical circuit.

All relevant legal electrical, fire and building regulations must be observed when installing the socket and/or the appliance.

In certain countries appliances are required to be connected to the electrical supply via a wall-mounted ON/OFF switch.

To avoid the risk of fire, electric shock or other injuries installation and connection of the appliance must be carried out by a suitably qualified electrician in accordance with all relevant local and national regulations and standards, including fire prevention.

The outlet must be easily accessible in an emergency so that the appliance can be quickly disconnected from the electrical supply in case of an emergency.

The socket must be located so that the upper edge is a maximum 82" (2100 mm) distance from the upper edge of the base of the kitchen cabinet.

If the outlet is no longer accessible once the appliance has been installed, an all-pole disconnect device with a contact opening of at least 1/8" (3 mm) must be present on site. The disconnect device may be circuit breaker, a fuse, or a contactor (compliant with local regulations).

The plug and power cord must not come into contact with the back of the appliance as vibrations can cause damage to these components. This, in turn, could result in a short circuit.

Do not plug in other devices behind this appliance.

Temporary or permanent operation on an autonomous power supply system or a power supply system that is not synchronized with the grid power supply (e.g., island networks, back-up systems) is possible. A prerequisite for operation is that the power supply system complies with the specifications of EN 50160 or an equivalent standard. The function and operation of the protective measures provided in the domestic electrical installation and in this Miele product must also be maintained in isolated operation or in operation that is not synchronized with the grid power supply, or these measures must be replaced by equivalent measures in the installation. As described, for example, in the current version of VDE-AR-E 2510-2.

If the power cord needs to be replaced, this must be done by a qualified technician.

Control panel

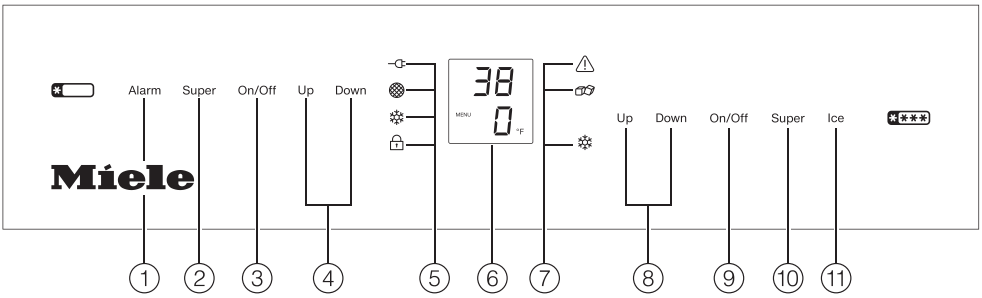

Refrigerator section

① Alarm-off button for silencing the door alarm, or the temperature alarm of the freezer section

② Button for turning SuperCool On / Off ❄

③ Button for turning the refrigerator section On / Off

④ Button for setting a higher or lower temperature in the refrigerator section

⑤ Indicator lights:
- Power failure
- Air filter dirty
- ❄ SuperCool is on
- Safety lock is On

⑥ Temperature display (top for refrigerator section, bottom for freezer section) and symbol display (only visible in the settings mode *MENU*; "More settings")

Freezer section

⑦ Indicator lights:
- ⚠ Temperature alarm for the freezer section
- Ice cube maker is On
- ❄ SuperCool is On

⑧ Button for setting a higher or lower temperature in the freezer section

⑨ Button for turning the freezer section On / Off

⑩ Button for turning SuperCool On / Off ❄

⑪ Button for switching the ice cube maker On / Off

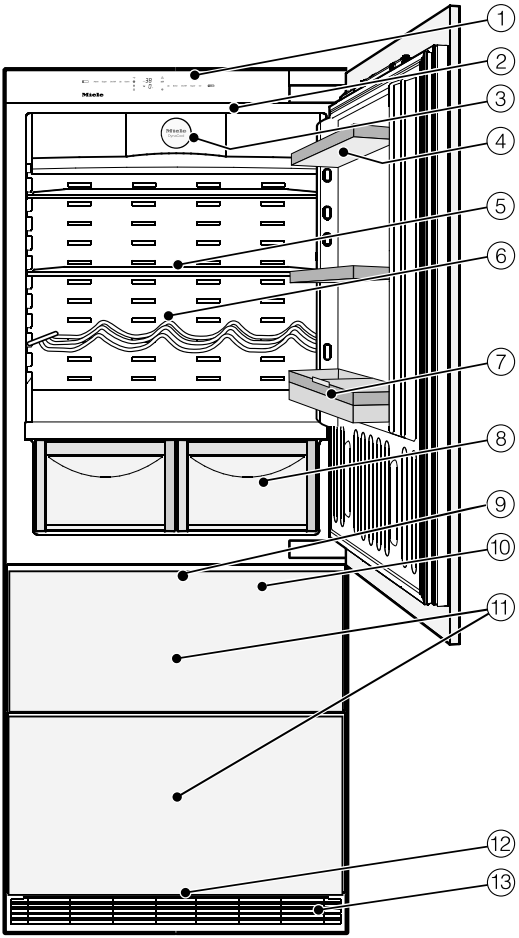

This drawing is for illustration purposes only.

① Control panel
② Refrigerator section interior lighting
③ Fan (DynaCool)
④ Egg tray / door shelf
⑤ Shelf
⑥ Bottle rack
⑦ Bottle shelf with bottle holder
⑧ Fruit and vegetable drawers
⑨ Automatic icemaker with ice cube container behind drawer
⑩ Freezer section interior lighting
⑪ Freezer drawers
⑫ Ventilation grille with air filter
⑬ Water line

Accessories supplied

Flexible bottle rack

Air filter

The air filter behind the ventilation grille protects the cooling system from dust.

Ice cube scoop

Optional accessories

Flexible bottle rack

(see "Included accessories" for more information)

Optional accessories are available from Miele, your Miele dealer or online.

	Normal energy consumption	Increased energy consumption
Installation / maintenance	In a well ventilated room.	In an enclosed, poorly ventilated room.
	Protected from direct sunlight.	In direct sunlight.
	Away from heat sources (radiator, stove/oven).	Near a heat source (radiator, stove/oven).
	Where the room temperature is ideal, i.e. around 20°C.	Where the room temperature is higher.
	Do not block the ventilation openings, and keep them clean.	Where the ventilation openings are blocked and full of dust.
Temperature setting	39 - 41°F (4 - 5°C) in the refrigerator section	The lower the temperature setting, the higher the energy consumption.
	0°F (-18°C) in the freezer section	

How to save Energy

	Normal energy consumption	Increased energy consumption
Use	The drawers and shelves are in the original arrangement.	
	Only open the doors when necessary and for as short a time as possible. Store food in an organized way.	Frequent opening of the door or for long periods will allow the cold to escape and warm air to enter. The appliance tries to keep the temperature low and the compressor runs longer.
	When shopping, use a cooler box or bag and place the food in the appliance as soon as possible. Replace items removed from the appliance as soon as possible before they warm up. Allow hot food and drinks to cool down before placing them in the appliance.	Hot food warms up the appliance. The appliance then tries to keep the temperature low and the compressor runs longer.
	Store food covered or wrapped.	The evaporation or condensation of liquids in the refrigerator section lower the cooling performance.
	Place frozen food in the refrigerator to thaw.	
	Do not overfill the appliance in order to allow the air to circulate.	

Before the first use

It is very important to let the appliance stand for 30 to 60 minutes after transport before you plug it in for the first time. Failure to do so can prevent the appliance from functioning properly!

Packaging material

- Remove all packaging material from the inside of the appliance.

Protective film

The stainless steel trim and covers are covered with a film to protect them during transportation.

- Pull the protective film off the stainless steel surfaces.

Cleaning and care

- Clean the inside of the appliance and the accessories (see "Cleaning and care").

Operating the appliance

A light touch of the finger on the sensor buttons is all that is required to operate this appliance.

After transporting the appliance, let it stand for approx. 1/2 to 1 hour before plugging it in. This is necessary to ensure that the appliance functions correctly!

Turning the appliance on

The refrigerator and freezer sections can be turned on and off separately so that you can use one section only.This is useful when you only need to have the freezer section running (when on vacation, for example.)



- Touch the button for turning the refrigerator and/or the freezer section On / Off so that the respective temperature is displayed.

The appliance starts to cool.

The top temperature display shows the temperature in the refrigerator section, the bottom temperature is that in the freezer section.
If the temperature in the freezer section is above 32°F (0°C), only dashes are displayed.

The alarm symbol ⚠ on the control panel flashes until the selected temperature is reached.

The interior lighting will come on when the refrigerator door or a freezer drawer is opened.

Allow the appliance to run for a few hours before placing food in it. Do not place food in the freezer section until the temperature is cold enough (at least 0°F / -18°C).

Turning the appliance off



- Touch the button for turning the refrigerator and/or the freezer section on On / Off until the respective temperature display goes out.

  This is not possible when the safety lock is on, which is indicated by the 🔒 symbol on the control panel.

The interior lighting goes out and the cooling is turned off.

Vacation Tips

Short vacations (if you will be away for less than four weeks)

- Shut off the water supply to the ice cube maker.
  When the ice cube maker LED starts blinking, the remaining water in the supply line is in the ice cube maker.
  Leave the Ice Maker on and working for one day so that the remaining ice cubes are ejected.
- Turn off the ice cube maker.
- Transfer all ice cubes to the right part of the upper drawer or to the bottom drawer.
- Use all perishables.
- Freeze other items.

Long vacations (if you will be away for more than four weeks)

- Shut off the water supply to the ice cube maker.
  When the ice cube maker LED starts blinking, the remaining water in the supply line is in the ice cube maker.
  Leave the ice cube maker on and working for one day so that the remaining ice cubes are ejected.
- Turn off the Ice maker.
- Remove all ice cubes from the drawer and dispose of them.
- Remove all food from the appliance.
- Turn the appliance off.
- Unplug the power cord from the electrical outlet or trip the circuit breaker.
- Clean the appliance.
- Leave the doors ajar to prevent any odor build-up in the appliance.

If, during a long absence, the appliance is turned off but not cleaned and the doors are left closed, bacteria may build up in the appliance.

The right temperature is very important for storing food. If food is not stored at the right temperature, bacteria can multiply rapidly, causing the food to spoil. This can be prevented or delayed by selecting the right temperature. Temperature affects the rate at which bacteria multiply. Reducing the temperature slows down this process.

The temperature in the appliance will rise for the following reasons:

– if you open the door frequently or keep it open too long,

– if you put too much food in it,

– if you put food in it that is too warm,

– if the room temperature is too high. The appliance is designed for use within a certain climate range (room temperature range) and should not be used outside this range.

. . . in the refrigerator

We recommend a temperature of **39°F** (**3°C**) in the refrigerator section.

Automatic cold air circulation (DynaCool)

Whenever the refrigerator section turns on for cooling, the fan is automatically turned on as well. This ensures that cold air is evenly distributed throughout the refrigerator, so that all the food stored inside will be chilled to approximately the same temperature.

. . . in the freezer

For freezing fresh food and storing frozen food for longer periods of time, the temperature needs to be 0°F (-18°C). At this temperature, most bacteria stop multiplying. However, when the temperature rises above 14°F (-10°C) the bacteria become active, causing the food to start deteriorating and reducing the storage life. This is why any partially or completely thawed food must never be refrozen until it has been cooked. High cooking temperatures will kill most bacteria.

Temperature display

In normal operation the display shows the **current average refrigerator temperature** and the temperature **in the warmest part of the freezer**.

Dashes are displayed if the temperature in the freezer section is not within the displayable range.

Depending on the room temperature, it can take several hours (3 to 8) until the selected temperature is reached and displayed steadily.

If the temperature was above 0°F (-18°C) for a longer period of time you will need to check to make sure that no frozen food started to thaw. Any food that started to thaw must be used as soon as possible!

The temperature display flashes when

– a new temperature is being set,

– the temperature in the appliance has risen by several degrees, indicating that it is warming up too much, or

– a fault is displayed "F1" to "F5" (see "Frequently asked questions").

This short-term loss of cooling is no cause for concern in the following cases:

– when the door has been left open for a while, for example to take out or put in a large amount of food,

– when fresh food is being frozen.

Setting the temperature for the refrigerator and freezer

The temperatures for the refrigerator and the freezer are set separately using the buttons for the respective section.



■ Set the desired temperatures using each of the buttons.

Tap

– **Up** to increase the temperature

– **Down** to decrease the temperature.

The temperature display flashes while you set the new temperature.

When you tap the buttons, you will see the following changes in the display:

– When first tapped: The **last temperature selected flashes.**

– Every new tap:
The temperature value changes in increments of 1 degree.

– Holding down the button will change the temperature value continuously.

Approximately 5 seconds after you release the button, the **actual** temperature in the appliance will be displayed.

If you have changed the temperature and the appliance is **not very full, wait approx. 6 hours**, if it is **full, approx. 24 hours** before checking the temperature display again. It will take that long to reach the selected temperature.

If, after this amount of time, the temperature is too high or too low, you will need to adjust it again.

Temperature ranges

The temperature can be selected within the following ranges:

– In the refrigerator section, 36°F to 44°F (2°C to 6°C).

– In the freezer section, 7°F to -15°F (-14°C to -27°C).

Using SuperCool in the refrigerator section

The SuperCool function can be used to rapidly reduce the temperature in the refrigerator section to its lowest setting (depending on the room temperature).

Turning on SuperCool

SuperCool is particularly recommended for quickly cooling large amounts of fresh food or drinks.



- Touch the button for turning SuperCool on and off so that the ❄ symbol to the left of the display will come on.

  The temperature in the refrigerator now begins to fall, with maximum cooling performance.

Turning off SuperCool

SuperCool automatically turns off after approx. 6 hours. The appliance continues running with normal cooling performance.

To save energy, you can turn off SuperCool yourself once the food or drinks are sufficiently chilled.



- Touch the button for turning SuperCool On / Off so that the ❄ symbol to the left of the display will go out.

  The appliance now continues running with normal cooling performance.

For best results, turn on SuperCool before putting fresh food into the freezer.

Fresh food will be frozen quickly, so that the nutritional value, vitamin content, appearance and taste are maintained.

Exceptions:

– if you are loading frozen food into the freezer.

– if you are not loading more than 4.5 lbs (2 kg) fresh food into the freezer per day.

Turning SuperCool on

SuperCool should be turned on **6 hours before you place** fresh food in the freezer. However, if you want **maximum freezing performance, SuperCool should be turned on 24 hours beforehand!**



■ Touch the button for turning SuperCool On / Off so that the ❄ symbol to the right of the display comes on.

The temperature in the freezer section now begins to fall, with maximum cooling performance.

Turning off SuperCool

SuperCool turns off automatically after approx. 30 - 65 hours. The length of time required until it turns off depends on the amount of fresh food added. ❄ goes out, and the appliance continues running with normal cooling performance.

To save energy, you can turn off SuperCool once the freezer reaches a constant temperature of at least 0°F (-18°C). Therefore you should check the temperature in the freezer section.



■ Touch On / Off button for SuperCool so that the ❄ symbol to the right of the display goes out.

The appliance now continues running with normal cooling performance.

The appliance is equipped with a warning system to ensure that the temperature in the freezer section does not rise unnoticed and to avoid energy being wasted if doors or drawers are left open.

Temperature alarm

An alarm will sound if the **temperature in the freezer section** becomes too-warm. The alarm ⚠ indicator flashes on the control panel as well as the bottom temperature indicator (for the freezer section) in the display.

When the alarm is triggered depends on the selected temperature.

The audio and visual signal is triggered:

– when you turn on the appliance if the temperature in the freezer section differs too much from the selected temperature,

– when too much warm air flows into the appliance, for example when food is being re-arranged or taken out,

– when freezing large amounts of food at once,

– when the appliance is malfunctioning.

Once the alarm condition has ended, the audio alarm stops and the alarm ⚠ indicator goes out. The temperature indicator for the freezer section stops flashing.

If the temperature was above 0°F (-18°C) for a longer period of time, you will need to check to make sure that no frozen food started to thaw. Any food that started to thaw must be used as soon as possible or cooked before refreezing!

Turning off the audio alarm

If the alarm signal bothers you, it can be silenced.



■ Touch the alarm button.

The alarm sound will stop.
The alarm ⚠ indicator and the bottom temperature indicator in the display keep flashing until the temperature has returned to normal.

Door alarm

An alarm will sound if the appliance door or a freezer drawer is left open for more than 3 minutes.

The alarm will stop as soon as the door or the freezer drawer is closed.

Turning off the audio alarm

If the alarm signal bothers you, it can be silenced.



■ Touch the alarm button.

The alarm sound will turn off.

Certain appliance settings can only be selected in the settings mode.

Options

S	Sabbath mode
c	Safety lock
I	Ice cube maker function test (for Service use only)
E	Setting the water quantity for the ice cube tray (see "Making ice cubes")
o	Temperature unit (Fahrenheit or Celsius)
h	Brightness of the display
H	Lower hinge heating control
n	Resetting the air filter display (see "Cleaning and care")

Some setting options are not covered below but rather in their respective chapters.

Sabbath mode S

Sabbath mode can be selected to facilitate religious customs.
In Sabbath mode, many functions are deactivated and cannot be selected.

– The interior lighting does not come on when the door or a freezer drawer is opened.
– The fan stays in its last setting.
– The door alarm is deactivated.
– The temperature alarm is deactivated.

The cooling performance of the appliance is not affected.

Sabbath mode is automatically deselected after approx. 120 hours. You can deactivate Sabbath mode yourself

When in Sabbath mode, the appliance cannot be turned off. Either deselect Sabbath mode or pull the plug.

A power failure would not be indicated in Sabbath mode. After a power failure the appliance goes back to Sabbath mode.

Turning Sabbath mode On / Off



- Press and hold the SuperCool button for the freezer section On / Off button for 5 seconds.

The SuperCool indicator ❄ to the right of the display is on during this time, and after 5 seconds S flashes in the lower temperature display (freezer section). The display shows MENU. You are now in settings mode.

- Touch the Super button again.

The following will appear in the display:

– *5 1* (Sabbath mode is activated), or

– *5 0* (Sabbath mode is deactivated).

- Touch the Super button again to confirm your selection.

The display shows "S" when the appliance is in Sabbath mode. The interior lighting goes out and the display and the symbols on the control panel go out.



- To leave the settings mode, touch the button for turning the freezer section on and off.

If not manually deactivated, Sabbath mode is automatically deselected after approx. 120 hours.

Safety lock *c*

The safety lock can be activated to prevent the appliance being turned off inadvertently.

Turning the safety lock On / Off



- Press and hold the SuperCool for the freezer section On / Off button for 5 seconds.

The SuperCool indicator ❄ to the right of the display is on during this time, and after 5 seconds *5* flashes in the lower temperature display (freezer section). The display shows MENU. You are now in the settings mode.



- Tap the button for setting the temperature in the freezer section until a flashing *c* appears in the lower temperature display.

- Touch the Super button again.

The following will appear in the display:

– *c 1* (Safety lock is activated), or

– *c 0* (Safety lock is deactivated).

■ Touch the Super button again to confirm your selection.

🔒 appears in the control panel when the safety lock is activated.



■ To leave the settings mode, touch the button for turning the freezer section on and off.

Temperature unit (Fahrenheit or Celsius) °

The temperature can be displayed in Fahrenheit (°F) or Celsius (°C).

The factory default is Fahrenheit.

Selecting the temperature unit



■ Press and hold the SuperCool button for the freezer secion On / Off button for 5 seconds.

The SuperCool indicator ❄ to the right of the display is on during this time, and after 5 seconds 5 flashes in the lower temperature display (freezer section). The display shows MENU. You are now in the settings mode.



■ Tap the button for setting the temperature in the freezer section until a flashing ° appears in the lower temperature display.

■ Touch the Super button again.

The following will appear in the display:

– ° C (Temperature display in Celsius), or

– ° F (Temperature display in Fahrenheit).

■ Touch the Super button again to confirm your selection.

The temperature is now displayed in the selected unit.



■ To leave the settings mode, touch the button for turning the freezer section on and off.

Brightness of the display h

You can adjust the brightness of the display to suit the light conditions in the room.

There are five different brightness settings. The factory default setting is 5 (maximum brightness).

Changing the brightness of the display



- Press and hold the SuperCool button for the freezer section On / Off button for 5 seconds.

The SuperCool indicator ❄ to the right of the display is on during this time, and after 5 seconds 5 flashes in the lower temperature display (freezer section). The display shows MENU. You are now in the settings mode.



- Press and hold the buttons for setting the temperature in the freezer section until a flashing h appears in the lower temperature display.
- Touch the Super button again.

The display shows h 0 to h 5:

– h 0: lowest brightness level

– h 5: highest brightness level.



- You can change the brightness within levels 0 to 5 by tapping the button for setting the temperature in the freezer section.
- Touch the Super button again to confirm your selection.



- To leave the settings mode, touch the button for turning the freezer section on and off.

Lower hinge heating control H

If condensed water appears in the lower hinge area or on the base plate between the refrigerator and freezer compartments, increase the output of the heating located behind the base plate.

Factory default is H A.

Condensation does not occur at normal room temperature and humidity. The heating prevents condensation at high humidity and low room temperature.

Changing the heat setting



■ Press and hold the SuperCool button for the freezer section On / Off button for 5 seconds.

The SuperCool indicator ❄ to the right of the display is on during this time, and after 5 seconds 5 flashes in the lower temperature display (freezer section). The display shows MENU. You are now in the settings mode.



■ Tap the button for setting the temperature in the freezer section until a flashing H appears in the lower temperature display.

■ Touch the Super button again.

The following will appear in the display:

– H A: select this if there is only little condensation,

– H 1: select this if there is a lot of condensation,

– H 0: select this if there is no condensation (heating off).

■ Change the heat setting by tapping the button for setting the temperature in the freezer section.

■ Touch the Super button again to confirm your selection.



■ To leave the settings mode, touch the button for turning the freezer section on and off.

Different storage zones

Due to the natural circulation of the air in the appliance, there are different temperature zones in the refrigerator. Cold, heavy air sinks to the lowest section of the appliance. Make use of the different zones when placing food in the appliance.

This appliance has dynamic cooling, which helps to keep an even temperature when the fan is running. For this reason, the difference between the various zones is less pronounced.

Warmest area

The warmest areas in the refrigerator are in the top section towards the front and in the top of the door. Use this for storing butter and cheese.

Coldest area

The coldest areas in a refrigerator are directly above the vegetable containers and next to the back wall.

Use this for all delicate and highly perishable food, such as:

– fish, meat, poultry,

– cold cuts, ready-made meals,

– dishes or baked goods containing eggs or cream,

– fresh doughs and cake batters,

– dairy products,

– pre-packed vegetables and other fresh food whose best-before date requires storage at a temperature of at least 39°F (4°C).

WARNING!
Danger of fire
Do not use small electric appliances inside the food storage compartments of the appliance, unless recommended by the manufacturer.

Do not store explosive materials in the appliance or any flammable products (e.g. spray cans).
Danger of explosion!

If you store food containing oil or fat in the appliance or in the refrigerator door, make sure that fat or oil does not drip on the plastic components of the appliance.
Traces of oil can cause stress cracks and breaking or cracking of the plastic components.

Do not allow food to touch the back wall of the appliance, as it may freeze to the back wall.

To allow air to circulate efficiently, do not pack food too closely together.

Do not cover the fan in the rear wall - this is important for cooling performance!

Adjusting the shelves

The shelves can be adjusted according to the height of the food.

- Lift the shelf at the front, pull it forwards slightly, lift the recess over the support ribs and move the shelf up or down.

The edge of shelf's rear stop must face upwards so that food does not touch the rear wall and freeze to it.

Stops prevent the shelves from being pulled out accidentally.

Shelf above the fruit and vegetable drawers

The shelf above the fruit and vegetable drawers can be removed for cleaning.

- Lift the shelf at the front, pull it forwards slightly to lift the stops, and slowly pull the shelf out.
- Lift the shelf at the front, pull it forwards slightly to lift the stops, and slowly pull the shelf out.

Fruit and vegetable drawers

The fruit and vegetable drawers can be removed for loading and unloading or for cleaning.

- Pull the drawer forward, then lift it up and out of the appliance.

Then push the rails back into the appliance to avoid any damage.

To insert the drawer,

- place the drawer on the completely extended rails. The rails must be in contact with the front of the drawer!
- Push the drawer in.

Adjusting the door shelf / bottle shelf

- Lift the hanging container up and out of the stainless steel support frame.

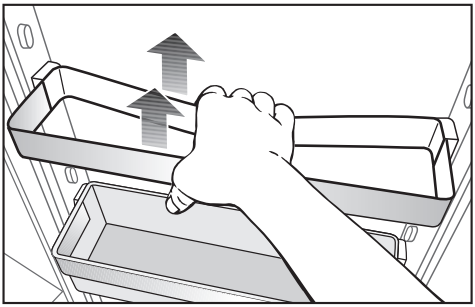

- Push the stainless steel support frame up and remove it by pulling it forward.
- Replace the stainless steel support frame at the desired location. Make sure that it is securely pushed back into position.
- Place the hanging container into the stainless steel frame.

The hanging containers can be removed for loading and unloading and then replaced.
The hanging containers with the food can be placed directly on the table for serving.

Adjusting the bottle divider

The bottle divider can be moved to the left or right. This holds the bottles more securely in position when the door is opened and closed.

The bottle divider can be removed completely (e.g. for cleaning):

- Slide the front edge of the bottle divider up and lift the bottle divider out.

WARNING!
Danger of fire
Do not use small electric appliances inside the food storage compartments of the appliance, unless recommended by the manufacturer.

Maximum freezing capacity

To ensure that fresh food placed in the freezer freezes through to the core as quickly as possible, the maximum freezing capacity must not be exceeded. The maximum freezing capacity within a 24-hour period is listed on the data plate as "Freezing capacity ...lbs/24 hrs".

Freezing fresh food

Fresh food should be frozen as quickly as possible so that the nutritional value of the food, its vitamin content, appearance and flavor are maintained.

- Place frozen food in the freezer immediately upon returning home.

Never re-freeze partially or completely thawed food. However, once thawed food has been thoroughly cooked you may freeze it again.

24 h before freezing

- When freezing more than 4 lbs (2 kg) of fresh food, turn on SuperCool ❄ 24 h before (see "Using SuperCool for the freezer section").This will protect the food that is already in the freezer with an added boost of cold.

Placing food in the freezer

When freezing, ensure that already frozen food does not come into contact with fresh food being frozen so that the frozen food does not start to thaw.

- When placing items in the freezer, ensure that the packaging and containers are dry to prevent them from sticking together when frozen.

Thawing frozen foods

Frozen food can be thawed in various ways:

– in the microwave,

– in a regular oven, using the "fan" or "defrost" setting,

– at room temperature,

– in the refrigerator (as it thaws, the frozen food will help cool the other food in the refrigerator),

– in the refrigerator (as it thaws, the frozen food will help cool the other food in the refrigerator),

Flat pieces of partially thawed meat or fish can be placed directly into a hot skillet.

Pieces of meat and fish (e.g. ground meat, chicken, fish fillet) should not come into contact with other food while thawing. Collect the thawed water and dispose of it carefully.

Fruit can be thawed at room temperature, either in the packaging or in a covered bowl.

Most vegetables can be cooked while still frozen. You can place them directly in simmering water or hot oil. Because of changes in the cell structure, the cooking time is slightly shorter than for fresh vegetables.

Never re-freeze partially or completely thawed food. However, once thawed food has been thoroughly cooked you may freeze it again.

Cooling drinks quickly

Bottles that are put in the freezer for quick cooling must be removed within one hour. Otherwise, they could burst.

For the automatic ice cube maker to operate it must be connected to the household water supply.

Turning the ice cube maker On

- If not done yet open the water supply to the ice cube maker.



- Turn the freezer section On.



- Touch the button for turning the ice cube maker on and off so that the indicator light of the ice cube maker comes on.

Ice cubes can only be produced if both freezer drawers are completely closed.

After the ice cube maker is turned on for the first time it can take up to 24 hours for the first ice cubes to drop out of the ice cube maker into the drawer.

Do not consume or use the first three batches of ice. This applies both to using the appliance for the first time and also using it after it has not been used for a long period of time.

The ice cube maker can make up to 120 ice cubes in 24 hours (if the temperature in the freezer section is 0°F (-18°C).

When the ice reaches a certain level in the drawer, the appliance stops producing ice automatically.

If the indicator light of the ice cube maker flashes, the ice maker is not being supplied with water. Check if the shut off valve of the water supply is opened.

Making larger quantities of ice cubes

The amount of ice cubes that the appliance makes in 24 hours depends on the temperature in the freezer section. Select SuperCool if you want to increase the production rate (up to 150 cubes in 24 hours). However, this will also increase the energy consumption of the appliance.

The ice cube maker starts producing again as soon as the drawer is closed.

Turning the ice cube maker Off

The ice cube maker can be turned off independently of the freezer section if you do not want to make any ice cubes.



- Touch the button for switching the ice cube maker on and off so that the indicator light of the ice cube maker goes out.

When the ice cube maker will be turned off for a long period of time:

- Shut off the water supply to the ice cube maker.
  When the ice cube maker LED starts blinking, the remaining water in the supply line is in the ice cube maker.
  Leave the ice cube maker on and working for one day so that the remaining ice cubes are ejected.
- Turn off the Ice maker.
- Remove all ice cubes from the drawer and dispose of them.

Setting the water quantity for the ice cube tray *E*

The size of the ice cubes that are produced depends on the quantity of inflowing water.

The quantity of inflowing water can be adjusted to make larger ice cubes.



- Press and hold the SuperCool button for the freezer section On / Off button for 5 seconds.

The SuperCool indicator ❄ to the right of the display is on during this time, and after 5 seconds *5* flashes in the lower temperature display (freezer section). The display shows MENU. You are now in the settings mode.



- Press and hold the button for setting a higher or lower temperature in the freezer section until a flashing *E* appears in the lower temperature display.
- Touch the Super button again.

E3 appears in the temperature display (factory default).

The water quantity can be set between *E1* (lowest water quantity) and *E8* (highest water quantity).

- You can change the water quantity within levels *1* to *8* by tapping the button for setting the temperature in the freezer section.
- We recommend increasing the water quantity by one level only (first to *E4*) and then check whether the ice cubes are big enough.

Do not increase by more than one step. If the adjusted size is too big, the ice cube tray of the ice maker could overflow.

- Touch the Super button again to confirm your selection.



- Touch the button for turning the freezer section on and off to leave the settings mode.

Check the ice cube size in the following days. If the ice cubes are still smaller than desired, follow the above steps again.

Freezer drawers

Both freezer drawers can be used for freezing and storing food.

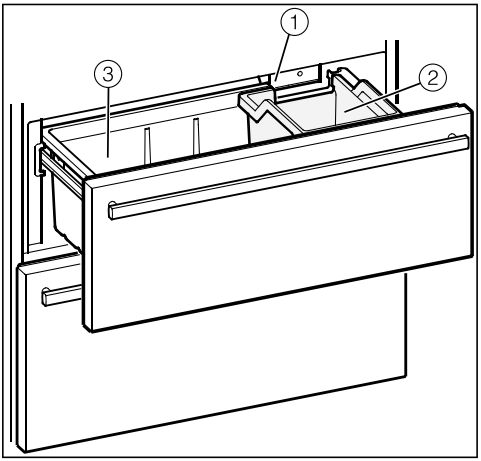

The ice cube maker ① is located above the upper drawer on the right side.

The ice cube container ② can be easily removed if required.

If you wish to use the whole of the top freezer drawer ③ for storing food, remove the ice cube cube container ② and turn off the ice cube maker.

Adjusting the separators

The lower freezer drawer is used for freezing fresh food and storing frozen food. The drawer can also be used to store ice cubes.

The dividing grille in the lower freezer drawer can be repositioned according to your wishes:

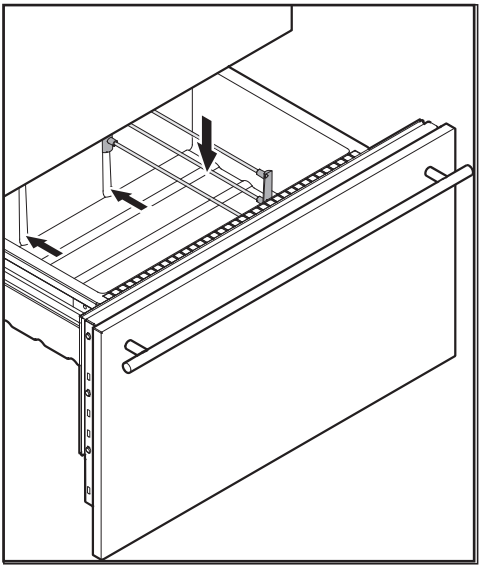

- Pull the lower freezer drawer out.
- Lift the dividing grill upwards and off and move it to the right or left, depending on your requirements.

Removing the freezer drawer containers

You can remove the freezer drawer containers for better cleaning.

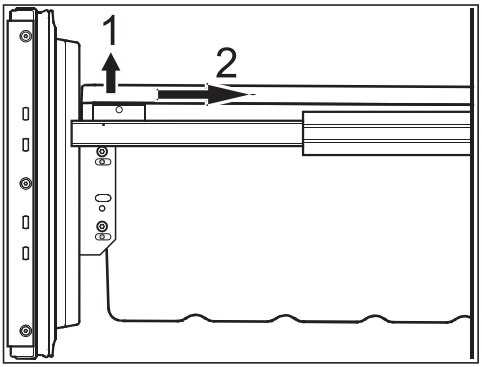

- Lift the container at the front left and right (1) and push it slightly backwards (2).

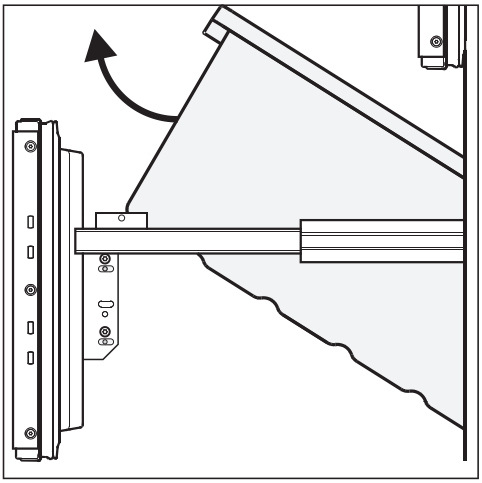

- Lift the container out.
- Replace the container by reversing the removal procedure.

WARNING! Risk of injury and damage.
Do not use other means to accelerate the defrosting process, other than those recommended by the manufacturer.

Refrigerator section

The refrigerator defrosts automatically.

During normal operation, condensate and frost can form on the back wall of the refrigerator section. You do not need to remove this, as it will defrost and evaporate automatically with the warmth generated by the compressor.

The condensate is drained away through a channel and drain hole, then fed into an evaporation system at the back of the appliance.

Freezer section

The appliance is equipped with a "NoFrost" system for automatic defrosting as needed.

The moisture generated in the appliance collects on the condenser, and is automatically defrosted and evaporates periodically.

- This automatic defrosting system keeps the freezer section permanently ice-free, while ensuring that the food stored in the freezer section does not thaw.

WARNING!
Danger of electric shock.
Unplug refrigerator or disconnect power.

Danger of fire.
Do not damage the coolant circuit.

Do not let water get into the electronic unit or the lighting, or on the metal contacts in the left-hand shelf support.

Cleaning water must not get into the drain hole.

Do not use a steam cleaning apparatus to clean the appliance. Steam could reach the electrical components and cause a short circuit.

The data plate located inside the appliance must not be removed. It contains important information that is required in the event of a service call.

Cleaning agents

To better maintain your appliance **avoid** the following:

– cleaning agents containing soda, ammonia, acid or chloride,

– cleaning agents containing soda, ammonia, acid or chloride,

– abrasive cleaning agents e.g. scouring powder or scouring cream cleansers, pumice stone,

– abrasive cleaning agents e.g. scouring powder or scouring cream cleansers, pumice stone,

– stainless steel cleaners,

– dishwasher cleaner,

– oven sprays,

– glass cleaners,

– abrasive hard sponges and brushes such as pan scrubbers,

– magic erasers,

– sharp metal scrapers.

Glass cleaners may be used to clean the exterior. However **do not** allow them to sit or "puddle", this can cause damage to the surface. Remove the cleaner promptly.

Use a mild solution of warm water and liquid dish soap.

The following pages contain important information on cleaning.

Before cleaning

- Turn the appliance off.

  The display goes dark and the cooling is turned off.
  If this is not the case, the safety lock is on (see "Additional settings - Turning the safety lock on and off).
- Unplug the power cord from the outlet or trip the circuit breaker.
- Take any food out of the appliance and store it in a cool place.
- Take all removable parts out for cleaning.

Cleaning the interior and accessories

Clean the appliance at least once a month.

Remove any soiling immediately so that it does not dry up.

- Clean the interior and the accessories using a mild solution of warm water and liquid dish soap. After cleaning, wipe everything with clean water, then dry with a soft cloth.
- Leave the appliance doors and drawers open for a short time.

The accessories are not dishwasher safe.

Door seal

Do not use any grease or oil on the door seal as this will cause the seal to deteriorate over time.

- The door seal should be cleaned regularly with clean water and then wiped thoroughly dry with a soft cloth.

Ventilation slits

- The ventilation slits should be cleaned on a regular basis with a brush or vacuum cleaner. A build-up of dust will increase the amount of energy the appliance consumes.

Cleaning the air filter

The reminder to change the air filter will be displayed at the latest every 6 months.

If the indicator light for the air filter lights up in the control panel, the air filter needs to be cleaned.

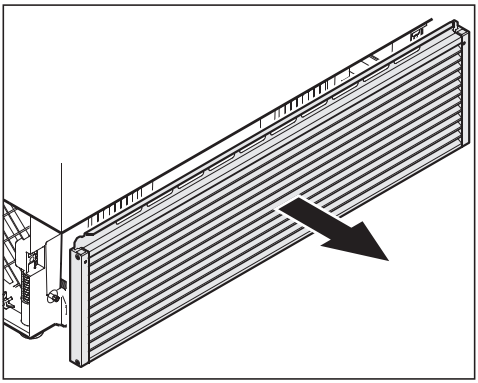

- The air filter should be cleaned when the air filter symbol on the control panel comes on.
- Remove the cover with the ventilation slits. No tools are required.

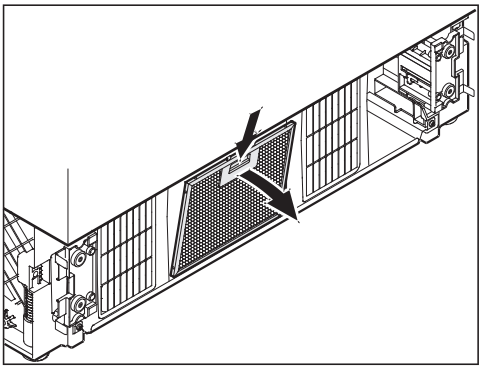

- Push the latch of the air filter downwards and take it out.
- Clean the air filter in the dishwasher or by hand with warm water and liquid dish soap.
- Replace the air filter by reversing the removal procedure.

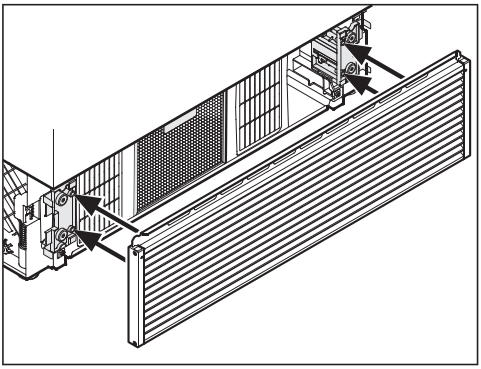

- Replace the cover with the ventilation slits.
- Reset the air filter indicator as follows:

Resetting the air filter indicator

The air filter indicator must be reset after each filter cleaning.



- Press and hold the SuperCool button for the freezer section On / Off button for 5 seconds.

The SuperCool indicator to the right of the display is on during this time, and after 5 seconds 5 flashes in the lower temperature display (freezer section). The display shows MENU. You are now in the settings mode.



- Tap the button for setting the temperature in the freezer section until a flashing appears in the lower temperature display.
- Touch the Super button again.

0 appears in the temperature display and lights up on the control panel.

- Touch the Super button again to confirm your selection.

appears in the temperature display and the indicator on the control panel goes out. The air filter indicator is now reset.



- Touch the button for turning the freezer section on and off to leave the settings mode.

After cleaning

- Replace all shelves and accessories in the appliance.
- Plug in the power cord and turn the appliance On.
- Turn on SuperCool to cool down the freezer section quickly.
- Turn on SuperCool for a while to cool down the refrigerator section quickly.
- Place food back in the refrigerator section, close the appliance door.
- Once the temperature in the freezer section is cold enough, you can place the food in the freezer drawers and return the drawers to the freezer.
- Turn off SuperCool as soon as the freezer section has reached a constant temperature of at least 0°F (-18°C).

You can easily resolve many of the minor problems you may encounter during everyday use. With the aid of the following guide, the cause of a problem can be found and eliminated.
If necessary, contact Miele Technical Service for assistance.

To prevent cold from escaping, open the appliance doors as little as possible until the fault has been corrected.

Repairs should only be carried out by a qualified and trained person in strict accordance with local and national safety regulations. Unauthorized repairs could cause personal injury or machine damage and may void the warranty.

Problem	Possible cause	Solution
The appliance does not get cold, the interior lightning does not come on when the door opens, and the display is dark.	The appliance is not turned on.	■ Turn the appliance On.
	The plug is not properly plugged into the electrical outlet.	■ Insert the plug into the electrical outlet.
	The circuit breaker has tripped. The fridge/freezer, the power supply or another appliance could be defective.	■ Contact a qualified electrician or Miele Technical Service for assistance.

The compressor runs more and more often and for longer periods of time, the temperature in the appliance drops.		
Problem	**Possible cause**	**Solution**
The temperature in the appliance is too low.	The temperature in the appliance is too low.	■ Correct the temperature setting.
	The freezer drawers are not closed all the way.	■ Check that the drawers are closing properly.
	A large amount of food is being frozen at once.	■ A large amount of food is being frozen at once.
	SuperCool is still on in the refrigerator section. SuperCool automatically shuts off after approx. 6 hours.	To save energy, you can turn SuperCool off yourself.
	SuperCool is still on in the freezer section. SuperCool automatically shuts off after approx. 30 - 65 hours.	To save energy, you can turn SuperCool off yourself.

Problem	Possible cause	Solution
	The ventilation slits in the base of the appliance are blocked or dusty.	■ Do not block the ventilation slits. ■ Clean the ventilation slits on a regular basis.
	The door or the drawers were opened frequently, or a large amount of fresh food was put in all at once for freezing.	■ Only open the doors or the drawers when necessary and for as short a time as possible. After a while the temperature will return to normal on its own.
	The appliance door or freezer drawers are not closed all the way. A thick layer of ice may have developed in the freezer section.	■ Close the appliance door or the freezer drawers. After a while the temperature will return to normal on its own. If a thick layer of ice has formed, it will decrease the cooling performance and increase the energy consumption. ■ Defrost the the freezer section and clean it.
	The room is too warm. The higher the room temperature, the longer the compressor has to run.	■ See "Installation - Location".
	The appliance was not properly installed in the niche.	■ See "Installing the appliance".

The compressor comes on less and less often and for shorter periods of time, the temperature in the appliance rises.		
Problem	**Possible cause**	**Solution**
The temperature in the appliance is too high.	This is not a fault.	■ Correct the temperature setting. ■ Check the temperature again after 24 hours.
The food begins to thaw.	The room temperature is too low for this appliance. The compressor runs less often if the room temperature is too low. Therefore it may become too warm in the freezer section.	■ See "Installation - Location". ■ Increase the room temperature.

Indication in the display		
Problem	**Possible cause**	**Solution**
The temperature display for the freezer section shows two dashes.	The temperature is only displayed if it is below 32°F (0°C).	■ Check the temperature display approx. 6 hours after the appliance is turned on.
	The temperature in the appliance rose to above 32°F (0°C) in the past days or hours because of a power outage.	■ Solution on the next page.

Indication in the display		
Problem	**Possible cause**	**Solution**
The power outage ⊣ indicator is on and the temperature indicator for the freezer section flashes.	The temperature in the appliance rose too much in the past days or hours because of a power outage. The appliance will go back to the last temperature setting when the power is back on.	■ Touch the Alarm button. Now the highest temperature that occurred in the freezer section during the power outage is displayed. The highest temperature will appear in the display for approx. 1 minute. Then the display will revert to the actual current temperature in the freezer section. ■ Depending on the temperature, check to see whether the food in the freezer thawed partially or completely. Food that thawed (whether partially or completely) must not be re-frozen until it has been thoroughly cooked. ■ Touch the Alarm button again. The power outage ⊣ indicator goes out.
The display shows "F1" to "F5".	The appliance has a fault.	■ Contact Miele Technical Service.

Interior lighting		
Problem	**Possible cause**	**Solution**
The interior lighting is not working.	The interior lighting automatically switches off if the door has been open for approx. 15 minutes. If that is not the reason, then there is a problem.	■ Contact Miele Technical Service. The LED lighting may only be repaired by Miele. There are current-carrying parts behind the light cover. Risk of injury or damage to the appliance! The light cover must not be removed! If the cover is damaged or absent due to damage – **Caution!** Do not examine the light (class 1M laser radiation) with optical instruments (magnifying glass, etc.)!

Additional problems		
Problem	**Possible cause**	**Solution**
Food has frozen together or to the wall.	The food packaging was not dry when loaded in the freezer.	■ Use a blunt instrument (such as a spoon handle) to carefully pry them apart.
The appliance cannot be turned off.	The safety lock is activated. The 🔒 indicator on the control panel is on.	■ Turn the safety lock off (see "Settings - Turning the safety lock on and off").

Frequently asked questions

Problems with the ice cube maker		
Problem	**Possible cause**	**Solution**
The ice cube maker will not turn on.	The appliance is not connected to the power supply or is not turned on.	■ Plug in the power cord and turn the appliance On.
The ice cube maker does not produce any ice cubes.	The appliance or the ice cube maker is not turned on.	■ Turn the appliance and the ice cube maker on.
	The water supply line is not open.	■ Open the water supply.
	The freezer drawers are not closed properly.	■ Close both freezer drawers properly.
	The temperature in the freezer section is too high.	■ Select a lower temperature.
If the indicator light of the Ice cube maker flashes.	The ice cube maker is not being supplied with water.	■ Check if the shut off valve of the water supply is opened.
The ice cubes have an unpleasant odor or flavor	The ice cube maker is not used very often. Ice cubes that are stored for a long period can absorb the taste and smell of other items.	■ Remove all ice cubes from the drawer.
	There are unsealed packages in the freezer section. Ice can absorb the taste and smell of unsealed food.	■ Store only sealed food in the freezer section.
	The ice cube drawer is dirty	■ Clean the ice cube drawer.

Normal noises	What causes them
Brrrrr...	This noise may get louder for brief periods when the motor kicks on.
Blub, blub....	A gurgling noise can be heard when the refrigerant circulates through the pipes.
Click....	Clicking sounds occur whenever the thermostat turns the motor on or off.
Sssrrrrr....	In multi-section and frost-free appliances, the movement of air circulating through the appliance can sometimes just barely be heard.
	In appliances with a water tank, a humming noise can be heard when the water pump is running.
Crack...	A cracking noise can be heard when the appliance materials expand.

Keep in mind that a certain amount of noise is unavoidable (from the compressor and the refrigerant circulating through the system).

Noises that you can easily eliminate	Possible cause	Solution
Rattling, clinking	The appliance is not level.	Realign the appliance using a level, by raising or lowering the screw feet underneath the appliance.
	The appliance is touching another appliance or piece of furniture.	Move it away.
	Drawers, baskets or shelves are jiggling or are stuck.	Check all removable items and refit them correctly.
	Bottles or containers are touching.	Separate them.
	The transport cord clips are still hanging on the back of the appliance.	Remove the cord clips.

After sales service

Technical service

In the event of a fault which you cannot easily correct yourself, please contact:

- your Miele dealer or
- Miele Technical Service.

Contact details can be found in the back of these operating and installation instructions.

Please quote the model and serial number of your appliance when contacting Miele.

This information is given on the data plate inside your appliance.

Warranty

For additional information, please refer to your warranty booklet.

See the end of these operating and installation instructions for this telephone number.

Please have the model and serial number of your appliance available when contacting Customer Service.

U.S.A.

Miele, Inc.

National Headquarters
9 Independence Way
Princeton, NJ 08540
www.mieleusa.com

Customer Support
Phone: 888-99-MIELE (64353)
info@mieleusa.com

International Headquarters
Miele & Cie. KG
Carl-Miele-Straße 29
33332 Gütersloh
Germany

Canada

Importer
Miele Limited

Headquarters and Miele Centre
161 Four Valley Drive
Vaughan, ON L4K 4V8
www.miele.ca

Customer Care Centre
Phone: 1-800-565-6435
905-532-2272
customercare@miele.ca

Miele

KFN 9859 iDE

en - US, CA

M.-Nr. 12 186 580 / 02