FISHER & PAYKEL

ACTIVESMART™
INTEGRATED REFRIGERATOR

FRENCH DOOR REFRIGERATOR FREEZER

RS80A & RS90A

BOTTOM MOUNT REFRIGERATOR FREEZER

RS9120W

USER GUIDE

NZ AU BI HK SG IN

CONTENTS

Safety and warnings	4
Before you begin	9
Using the control panel	11
Storage features	12
Using your appliance	13
WiFi connection	25
Cleaning and care	26
Food care	31
User warnings and sounds	32
Troubleshooting	33
Service & Warranty	37
European Directive 2012/19/EU on Waste Electrical and Electronic Equipment (WEEE)	38

Registration

To register your product visit our website: fisherpaykel.com/register

⚠ WARNING!



Electric Shock Hazard

Failure to do so can result in death, electric shock, fire or injury to persons.

- Read and follow the safety and warnings outlined in this user guide before operating this appliance.

⚠ WARNING!



This appliance contains flammable refrigerant isobutane (R600a).

READ AND SAVE THIS GUIDE

WARNING!

Read entire manual. Failure to follow all guides and rules could cause personal injury or property damage. When using this appliance, always exercise basic safety precautions including the following:

General Use

- This product has been designed for use in a normal domestic (residential) environment.
- Children aged 3 to 8 years may load and unload this appliance under supervision.
- Children should be supervised to ensure that they do not play with the appliance.
- Cleaning and user maintenance shall not be undertaken by children without supervision.
- This appliance can be used by children aged from 8 years and above and persons with reduced physical, sensory or mental capabilities or lack of experience and knowledge if they have been given supervision or instruction concerning use of the appliance in a safe way and understand the hazards involved.
- The manufacturer's installation instructions for product and cabinetry ventilation must be followed when installing the appliance.
- To avoid hazard due to instability of the appliance, it must be fixed in accordance with installation instructions.
- Keep ventilation openings, in the appliance enclosure or the built-in structure, clear of obstruction.
- Do not use mechanical devices or other means to accelerate the defrosting process, other than those recommended by the manufacturer.
- Do not damage the refrigerant circuit.
- In case of damage to the refrigerant circuit, ventilate the area by opening all windows.
- Do not operate electrical equipment or any other equipment that may produce arcs, sparks or flames in the area. Contact your Fisher & Paykel trained and supported service technician immediately to arrange for the appliance to be repaired.
- Connect to potable water supply only
- This refrigerating appliance is intended to be used at ambient temperatures ranging from 16 °C to 38 °C. The product performance may be compromised when operating outside of this temperature range.
- It is hazardous for anyone other than a Fisher & Paykel trained and supported service technician to service this appliance. In Queensland – the authorized Service Person MUST hold a Gas Work Authorisation for hydrocarbon refrigerants, to carry out Servicing or repairs which involve the removal of covers.

Electrical

- This appliance must be installed in accordance with the installation instructions before use.
- To allow disconnection of the appliance from the supply after installation, incorporate a switch in the fixed wiring in accordance with the wiring rules.
- Never unplug your refrigerator by pulling on the power cord. Always grip the plug firmly and pull straight out from the outlet.
- Do not plug in any other appliance at the same power point as your refrigerator or use extension cords or double adapters.
- Repair or replace immediately all electric service cords that have become frayed or otherwise damaged. Do not use a cord that shows cracks or abrasion along its length or at either the plug or appliance end.

- If the power supply cord is damaged, it must only be replaced by your Fisher & Paykel trained and supported service technician because special purpose tools are required.
- When moving your appliance away from the wall, be careful not to roll over or damage the power cord.
- WARNING: Do not use electrical appliances inside the food storage compartments of the appliance, unless they are of the type recommended by the manufacturer.
- When positioning the appliance, ensure the power cord is not trapped or damaged.
- Do not locate multiple portable socket-outlets or portable power supplies at the rear of the appliance.

Food safety

- Regularly clean accessible draining systems and surfaces that come in contact with food.
- Ensure any raw meat or fish is stored in sealed containers to prevent cross-contamination.
- Immediately clean any drips or spills on surfaces.
- If the appliance will be left empty for long periods, switch off, defrost, clean, dry, and leave the door open to prevent mould developing within the appliance.
- Opening the door for long periods can cause a significant increase of the temperature in the compartments of the appliance.

Storing food and drinks/wine

- Do not store explosive substances such as aerosol cans with a flammable propellant in this appliance.
- Never store volatile or flammable materials in your appliance as they may explode.
- Never freeze liquids in glass containers. Liquid expands during freezing, which may cause the container to explode.
- Never freeze carbonated drinks. They may explode.

Servicing

- Your refrigerator is designed to operate for many years without the need for service checks. However, if your refrigerator is malfunctioning, have it attended to by your Fisher & Paykel trained and supported service technician as soon as possible. All electrical repairs must be carried out by an adequately trained service technician or qualified electrician.
- The LED light cannot be serviced by the user. Contact your Fisher & Paykel Dealer or Fisher & Paykel trained and supported service technician.
- If you suspect that the product is not getting cold—items such as ice cream are melting—remove all perishable food and store in another appliance or cooler to prevent spoilage. Immediately call for a service technician.

Cleaning

- Use mild dish-washing liquid with warm water and a lint-free cloth to clean the product.
- Avoid using anti-bacterial cleaning products on either the interior or exterior of the cabinet as they may cause rusting of metal components and cracking of plastic components.

Disposal

- Extreme care must be taken when disposing of your old appliance to avoid hazards:
- The flammable refrigerant gas must be safely removed by a qualified service technician.

- The thermal insulation foam in this appliance may contain flammable insulation blowing gases, any exposed foam may be highly flammable and must be carefully treated during disposal.
- WARNING: Risk of child entrapment. Before you throw away your old refrigerator or freezer, the doors and panels should be removed and the racks left in place so that children may not easily climb inside.
- Consult your local energy authority or local codes as to the best way to dispose of your old appliance.

Water connection

- The water connection to your Ice & water refrigerator must be installed by an authorised plumber or Fisher & Paykel trained and supported service technician.
- Installation and use MUST comply with all state and local plumbing codes. Check with your local public works department for plumbing codes. You must follow their guidelines as you install the water filtration system.
- If the water tank has not been used for an extended period of time, or has developed an unpleasant taste or odour, flush the water system. If the problem persists, replace the water filter cartridge and refer to the flushing instructions detailed in section 'Flushing through the water dispenser.
- To avoid serious illness or death, only connect your water filter to safe drinking water.
- The water filter cartridge needs to be changed when the replacement indicator icon illuminates. This will happen every six months.
- If the water filtration system has been allowed to freeze, replace filter cartridge. Failure to replace the disposable filter at recommended intervals may lead to reduced filter performance and failure of the filter, causing property damage from water leakage or flooding.
- In cases of excessively reduced filter life — we recommend that you consult a local plumber or your water supplier for advice on suitable filtration requirements for the water supplied to your home.
- Filter replacement is the consumer's responsibility and will not be covered by the warranty except in the case of faulty parts or materials within the filter cartridge.
- If the water has not created ice for some time or ice has an unpleasant taste or odour dispose of ice and refer to 'Automatic ice' for flushing instructions. If unpleasant taste or odour persists, you may wish to fit a new filter cartridge.
- Use new tubing supplied with the refrigerator. DO NOT reuse old tubing from old water and ice connections.
- Your water filtration system can withstand up to 827kPa of water pressure.
- Ensure the supplied pressure limiting valve is installed before installing the water filtration system. DO NOT install if water pressure exceeds 827kPa.

To reduce the risk associated with property damage due to water leakage or flooding:

- DO NOT install systems in areas where ambient temperatures may go above 38°C or drop below 0°C.
- DO NOT install on hot water supply lines. The maximum operating water temperature of this filter system is 38°C.
- DO NOT install where water hammer conditions may occur. If water hammer conditions exist, you must install a water hammer arrester.

WARNING!

To reduce the risk associated with choking:

- DO NOT allow children under 3 years of age to have access to small parts during the installation of the water filter.

Ice making

- Avoid contact with the moving parts of the ice maker ejector mechanism, and do not place your fingers on the automatic ice- making mechanism while the appliance is in operation.
- At first use or after water filter has been replaced, there may be discolouration in the first bin of ice cubes. Discard the discoloured ice cubes. If discolouration continues in succeeding bins, contact your Fisher & Paykel trained and supported service technician.

Power failure

- In the event of a power interruption, the appliance will automatically save the current temperature settings. When power is recovered, the appliance will revert to the current temperature settings only.
- Most power failures are corrected within a short period of time. 1 – 2 hours loss of power will not affect the appliance's temperatures.
- To avoid sudden change of temperature while the power is off, you should avoid opening the door. A refrigerator will keep food safe for up to 4 hours during a power outage. Keep the door closed as much as possible. Discard refrigerated perishable food such as meat, poultry, fish, eggs, and leftovers after 4 hours without power.

BEFORE YOU BEGIN

- Ensure the installer has completed the final checklist in the installation guide.
- Read this guide, taking special note of the safety and warnings section.
- Remove all packaging and dispose of it responsibly. Recycle items that you can.

RS80 and RS90 models

Refrigerator compartment

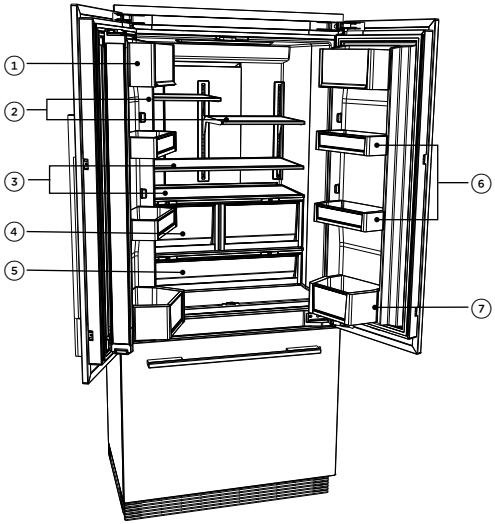

Refrigerator features

1. Dairy shelf
2. Half-width cantilever glass shelves
3. Full-width cantilever glass shelves
4. Fruit and vegetable bins with humidity control lids
5. Slim bin with humidity control lid
6. Door shelves
7. Dairy compartment

Freezer compartment

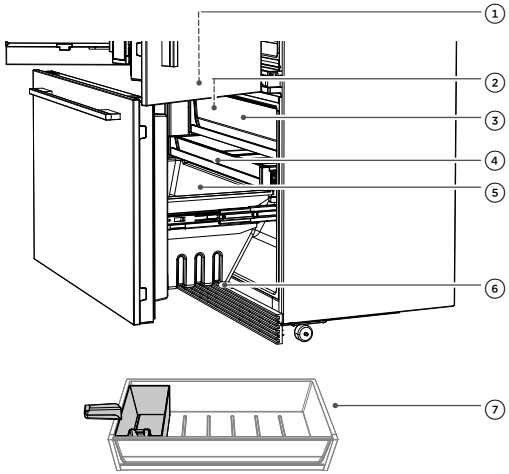

Freezer features

1. Ice maker*
2. Ice storage bin with scoop
3. Top bin
4. Mid tray
5. Large bottom bin
6. Water filter
7. Manual ice tray with lid**

* Top left of freezer (Ice & Water models only)
**Non-Ice & Water models only

RS9120W model

Refrigerator compartment

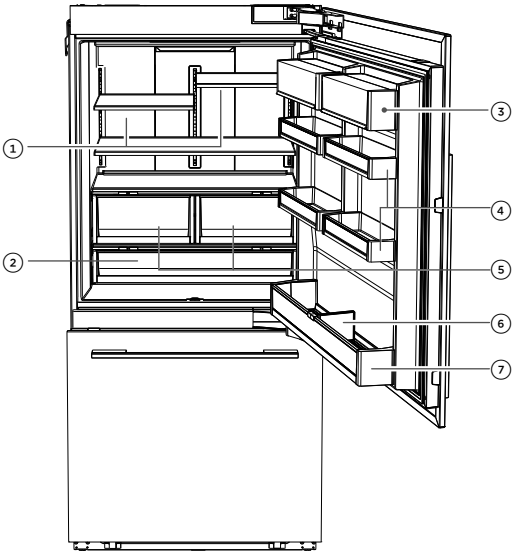

Refrigerator features

1. Dairy shelf
2. Slim bin with humidity control lid
3. Dairy shelf
4. Door shelves
5. Fruit and vegetable bins with humidity control lids
6. Bottle divider
7. Large aluminium extrusion door shelf

Freezer compartment

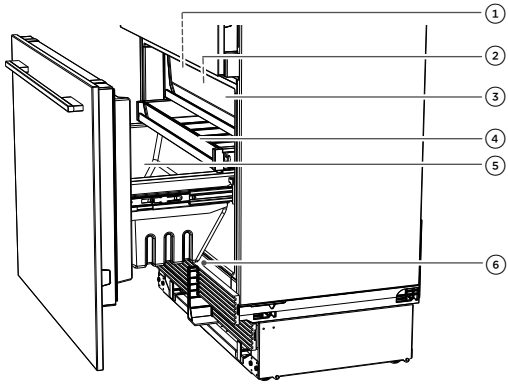

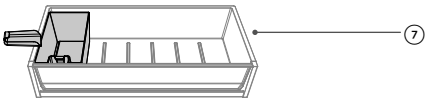

Freezer features

1. Ice maker*
2. Ice storage bin with scoop
3. Top bin
4. Mid tray
5. Large bottom bin
6. Water filter
7. Manual ice tray with lid**

* Top left of freezer (Ice & Water models only)
**Non-Ice & Water models only

USING THE CONTROL PANEL

The control panel enables you to view and modify all the features and options of your refrigerator. Extra features available on selected models.

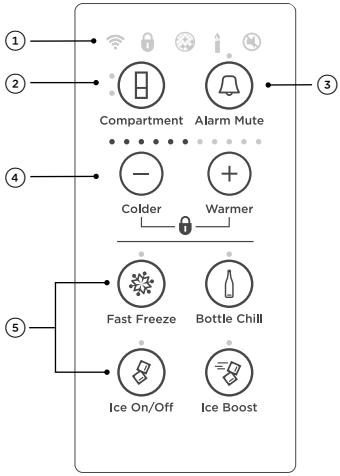

Ice & Water models

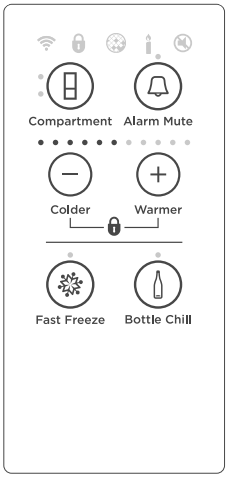

Non-Ice & Water models

①		WiFi illuminates when functionality is activated.
		Illuminates to indicate that the keys on the control panel are locked. Allows you to disable the buttons on the control panel.
		Illuminates when the water filter needs replacing.
		Illuminates to indicate that Sabbath mode is activated.
		Illuminates to indicate key press sounds are deactivated.
②	Allows you to select the compartment to adjust the temperature. • Upper light to indicate the refrigerator compartment is selected. • Lower light to indicate the freezer compartment is selected.	
③	Alarm mute deactivates the door alarm for 20 minutes.	
④	Allows you to adjust the temperature of the selected compartment.	
⑤	Allows you to select features:	
	FAST FREEZE	**BOTTLE CHILL**
	ICE ON/OFF	**ICE BOOST**

STORAGE FEATURES

REFRIGERATOR	
Fruit and vegetable bins/Slim bin with humidity control lids	Separate fruits and vegetables to prevent the ethylene-sensitive produce from ripening too quickly-helps to extend their storage life.
	Also used for storing deli items and beverages, or for defrosting foods.
Slim bin with humidity control lid	The slim bin stores long vegetables which cannot fit in the fruit and vegetable bins.
	Also used for storing deli items and beverages, or for defrosting foods.
Cantilever glass shelving	Heat-treated safety glass
	Can be removed and positioned at heights to suit your storage requirements.
	The half-width shelves can be positioned side by side; best when storing large items such as platters.
	Maximize the storage space when storing items of varying heights by positioning the half-width shelves at different levels.
Dairy shelf and door shelves	The top door shelf is a dairy compartment for storing butter and cheeses.
	The middle shelves are designed for general items, condiments and drinks.
	The bottom shelves are designed to store large drinks or those drinks you require frequent access to.
	Clear windows give ultimate visibility to what is being stored in the door shelves.
	Adjustable door shelves with dividers.
Single bottle holders	Placed along the length of any shelf to store a variety of bottles.
	Store bottles with the neck facing the front of the refrigerator.
	Unused bottle holders can be stacked on top of one another to maximize shelf space.

FREEZER	
Ice maker (Ice & Water models only)	Removable ice container.
	Hygienic ice scoop.
Freezer bins	Allow for easy storage of frozen food items.

Temperature control (all models)

When you turn your refrigerator on for the first time, the cooling system will automatically cool all compartments to their recommended temperatures as displayed by 6 LEDs — 3°C refrigerator and -18°C freezer. This will take between 2-3 hours.

For storage of general household foods in the most efficient manner, it is recommended to use the product in the factory configuration supplied. Moving the shelves and bins will have a minimal impact on efficiency.

The internal control panel enables you to change and control the temperature of all compartments accurately and independently. The internal control panel default setting is to show the set temperature for the refrigerator compartment.

For common foodstuffs, the factory default setting provides the optimum setting for foodcare.

How to adjust the temperature — Refrigerator compartment

1

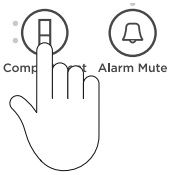

Press ▣ until the refrigerator compartment light is illuminated, indicated by the top light.

2

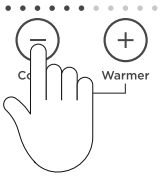

Press + to increase the temperature, press − to decrease the temperature.

How to adjust the temperature — Freezer compartment

1

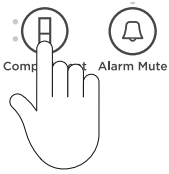

Press ▣ once to adjust the freezer compartment temperature.

The freezer compartment light will illuminate.

2

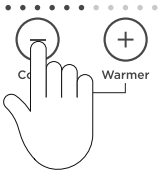

Press + to increase the temperature, press − to decrease the temperature.

Door alarms

If the refrigerator compartment door is left open, the alarm will beep after 90 seconds, if the freezer door is left open the alarm will beep after 60 seconds. If either of the doors remains open, subsequent beeps will sound every 30 seconds for five minutes.

Alarm mute

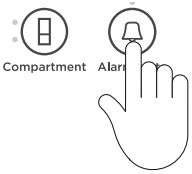

To activate/deactivate **ALARM MUTE**, press once. The light above the button will illuminate to indicate the refrigerator is muted.

ALARM MUTE will automatically deactivate after 20 minutes or when the door is closed.

Key mute

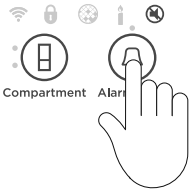

To activate/deactivate **KEY MUTE**, press for four seconds.

Once **KEY MUTE** is activated the icon on the internal control panel illuminates, all key sounds are silenced.

Door alarms and the **BOTTLE CHILL** alarm are still operational.

Key lock

KEY LOCK allows you to disable the buttons on the internal control panel. This is useful when cleaning your refrigerator.

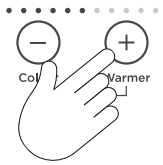

To activate/deactivate **KEY LOCK**, press − and + together for four seconds.

When **KEY LOCK** is activated the icon on the internal control panel will illuminate. Pressing any of the buttons will sound several beeps to tell you that they are disabled.

Sabbath mode

In **SABBATH MODE**, alarms, lights and displays are deactivated for 80 hours.

Once in Sabbath mode:

- The interior light will not turn on when you open the refrigerator.
- The door alarms will not operate.
- The display will not illuminate, except the Sabbath mode icon.
- The internal and external control panels will not operate.
- Sabbath mode automatically deactivates after 80 hours.

1

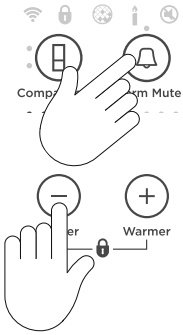

To activate/deactivate **SABBATH MODE,** press , and ▬ together for four seconds. The icon on the internal control panel will illuminate when **SABBATH MODE** is activated.

If you turn off your refrigerator while in **SABBATH MODE** it will resume automatically once the refrigerator is switched on again.

Features

Fast Freeze

FAST FREEZE boosts freezing speed by dropping to its coldest temperature for 24 hours, helping retain freshness, texture and taste during the freezing process.

1



To activate, press on the internal display. The **FAST FREEZE** light will illuminate.

2



To deactivate before the 24 hours has elapsed, press again.
When **FAST FREEZE** is deactivated the light is off.

For best results, activate the function before it is required. Alternatively, activate it when placing food into the freezer.

Bottle Chill

BOTTLE CHILL rapidly chills your beverages in the freezer for a set time of 15 minutes. Depending on bottle size, you may need to return it to the freezer and reset.

1

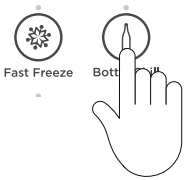

To activate, press on the control panel. The **BOTTLE CHILL** light will illuminate.

The icon will illuminate on the external display (Ice & Water models only).

2

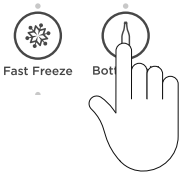

An alarm will sound after 15 minutes to remind you to remove your beverage.

For non water-dispensing models

Open the refrigerator compartment door and press any button on the control panel to silence the alarm.

3

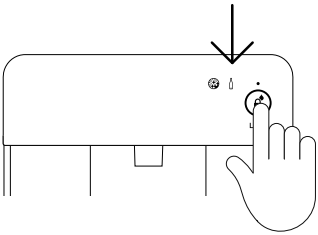

For water-dispensing models

The icon will flash on the external display. Press on the external display to silence the alarm.

4

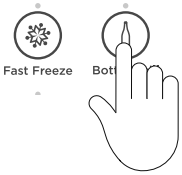

To deactivate **BOTTLE CHILL** before 15 minutes, press the button on the control panel.

When **BOTTLE CHILL** is deactivated, the light will not illuminate and the icon is not visible on the external display (Ice & Water model only).

IceOn/Off

ICE ON/OFF activates automatic ice - this is only available in the lower compartment.

Your ice maker is designed to automatically dispense ice into the ice storage bin below until it detects the bin is full. The more ice you use, the more it makes. Before first use the automatic ice systems needs to be flushed.

1



To activate/deactive, press .

When the ice maker is activated the light will illuminate.

Ice Boost

ICE BOOST increases ice production by up to 30% and will automatically deactivate after 24 hours.

1

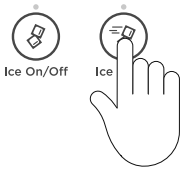

When you first turn your ice maker on, **ICE BOOST** is off.

To activate, press . The light above the button will illuminate.

ICE BOOST will pause once your ice bin is full.

2

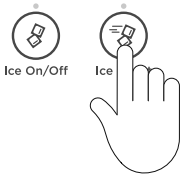

To manually deactivate press again. The light will not illuminate.

Activating **ICE BOOST** will automatically turn on ice making.

Deactivating ice making automatically deactivates **ICE BOOST**.

Information about your ice maker

Your automatic ice maker will produce approximately eight cubes of ice every 3 – 4 hours, depending on the freezer compartment temperature and the number of door openings.

The ice cube tray will fill with water. When cubes are frozen, they will be ejected from the ice tray into the ice storage bin. Ice making will continue until the storage bin is full. Ice making will resume once you start to use the stored ice.

Your Ice & Water product comes with a smaller ice bin inside the larger freezer bin. Attached to the ice storage bin is the scoop for the ice. This scoop provides hygienic access to the ice. If a large amount of ice is required, remove an ice storage bin and allow ice to fall into the larger bin. For maximum ice storage, level the stored cubes with the ice scoop.

If ice is not used often, old cubes will become cloudy, taste stale, will shrink and may stick together. Empty the ice storage bin periodically and wash in lukewarm water. Dry thoroughly and place back into the correct position.

Turn your ice maker off if:

- There is no water supply for several hours.
- You are removing the ice storage bin for a period of time.
- You are going on holiday/vacation.

Water dispenser (Ice & Water models only)

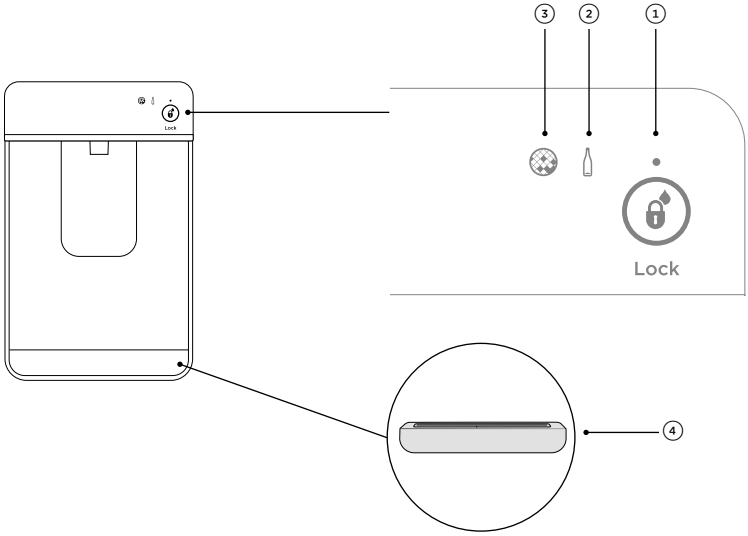

①	**Dispenser lock button and LED light**	Locks/unlocks the water dispenser. The LED above the lock button will illuminate when dispenser is locked.
②	**Bottle Chill indicator**	Icon will illuminate when **BOTTLE CHILL** is activated and flashes when the beverage is ready.
③	**Filter change indicator**	Icon will illuminate when water filter requires changing.
④	**Drip tray**	The drip tray is designed to fit into the bottom of the water dispenser panel to capture any odd drips of water that may fall after dispensing.

Dispensing

Your water dispenser is designed for one-handed operation.

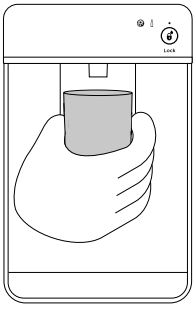

To dispense water, gently press the dispensing pad with a glass or container.

To stop the flow of water, simply pull your glass or container away from the dispensing pad.

Pressing hard against the dispensing pad will not increase the flow or dispense more water.

Dispenser lock

The DISPENSER LOCK is located on the external display and can be activated to prevent water from being dispensed. This is useful when you are cleaning the external display or when there are small children around.



To activate/deactivate DISPENSER LOCK, press for four seconds.

When activated the light above the button will illuminate.

When the dispenser pad is pressed, several beeps will sound to alert the user that water cannot be dispensed.

Water filter

The water supplied to your refrigerator is filtered to remove impurities through a filter located internally at the top right corner of the refrigerator. Replace your filter cartridge every 6 months.

- There is a replacement indicator icon on the internal control panel and external display which will appear when the filter needs replacing. The icon will flash, as a reminder, when water is dispensed.
- Replacement filter cartridges are available from your Fisher & Paykel dealer, online or from a Fisher & Paykel service technician. The details of the replacement filter cartridge are labelled on the cartridge.

Changing the water filter cartridge

Guidance of how to replace your water filter can be found at fisherpaykel.com/water-filter.

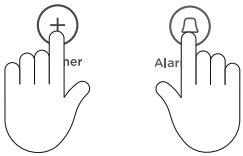

To reset the filter indicator:

Press and + together for 4 seconds.

The on the control panel will turn off when reset.

Flushing the water filter

Before you start using the Ice & Water function, complete the flushing steps to ensure optimum performance of your water filter.

To flush through the automatic icemaker

1

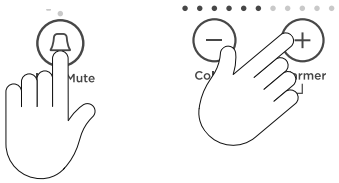

Press and hold 🔔 , − and + together for 4 seconds then close the door(s). The ice tray will flip twice and empty the water into the bin below. The ice tray will flip only after the doors are closed.

Repeat the cycle to help remove any dust in the ice tray collected during manufacture and transport.

2

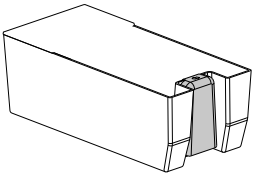

Empty the water in the bin and return the bin correctly. Ensure that the scoop is located in front of the bin.

Once your ice maker is turned on, discard the first 3 harvests of ice (8 cubes per harvest). This will flush away any impurities in the water line and ensure the best ice quality.

Do the above steps after a holiday/vacation or extended periods of not using ice.

To flush through the water dispenser

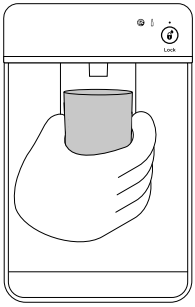

Press the water dispenser pad to dispense 4L of water.

Wait for 4 minutes before dispensing again.

Dispense another 4L of water. Your water dispenser is now ready for use.

Water will continue to drip from the dispenser for a few more days after installation as the remaining trapped air is released from the system.

NOTE: There may be carbon residue dispensed together with water. This is not harmful, and normal during flushing process.

Humidity control system

Humidity control lids

The control lids are fitted to the fruit and vegetable bins and slim bin of your refrigerator.

- These lids seal the bins and provide a humid microclimate to extend the storage times of fruit and vegetables.
- The lids have specially designed grooves that retain moisture to prevent condensation from dripping onto the fruits and vegetables at times of high humidity.

Humidity slide

Each bin has an adjustable humidity slide that enables you to choose a fruit or vegetable setting depending on your storage needs.

- If there is too much water in the bins (due to high humidity), the control can be adjusted towards the fruit setting to reduce drips of water and/or wipe the water dry (if required).
- Be aware that a small amount of water in the bins is beneficial for fruit and vegetable storage.
- Use the vegetable setting when you store ethylene-sensitive vegetables such as lettuce, spinach, broccoli, cabbage, carrots.
- Use the fruit setting when you store high-ethylene fruits such as citrus fruits, stone fruits and some tropical fruits.
- We recommend adjusting the humidity slide to the center when you store both fruits and vegetables.
- We recommend storing all fruit and vegetables without external packaging and in separate bins.
- Separating the fruit and vegetables prevent ethylene-sensitive produce from ripening too quickly, and help extend their storage life.

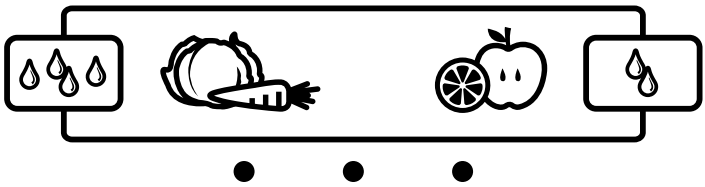

Humidity control graphic

Slim storage drawer

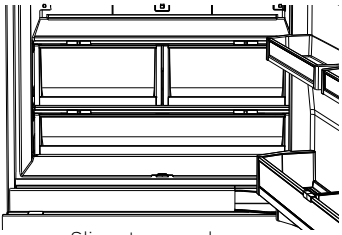

Slim storage drawer

The slim bins at the bottom of the refrigerator compartment provide storage space for items that you may want to keep separate from the rest of the refrigerator.

These slim storage bins can be used for deli item storage, beverages or for defrosting foods.

Bottle holder (where fitted)

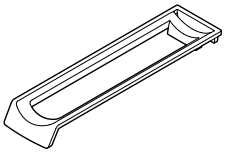

Bottle holder

The bottle holders can be used to store a variety of bottles.

To position the bottle holder in your refrigerator, simply slot the back edge of the bottle holder onto the back trim of any shelf in the refrigerator compartment.

If you are not using all or some of the bottle holders, the unused bottle holders can be stacked up on top of one another so they do not take up unnecessary shelf space.

Bottles are best stored with the neck of the beverage facing the front of the refrigerator.

Glass shelves

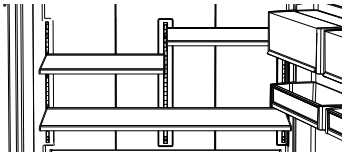

Glass shelves can be repositioned in the cabinet as desired.

Remove shelves by lifting up the back of the shelf and then pulling the shelf forward.

WIFI CONNECTION

Your appliance can be connected to your home wireless network and operated remotely using the app.

Getting started

- Ensure your home WiFi network is turned on.
- You will be given step by step guidance on your mobile device.
- It may take up to 10 minutes to connect your appliance.

On your mobile device:

① Download the app from www.fisherpaykel.com/connect
② Register and create an account.
③ Add your appliance and set up the WiFi connection.

Exterior

Clean all surfaces with liquid dishwashing detergent dissolved in warm water and a soft cloth. Rinse with clean water and dry with a clean, lint-free cloth.

Do not use any abrasive stainless steel cleaners, glass cleaners, solvents or scourer pads as these will damage the door surface.

Door gasket

Clean the magnetic door gasket every three months with a toothbrush, and liquid detergent dissolved in warm water.

Bottle holder (where fitted)

Clean with warm water and detergent. The use of abrasive cleaners and solvents may cause damage.

External display and water dispenser (Water-dispensing models only)

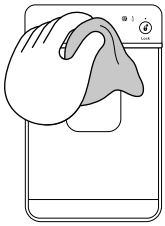

Activate the DISPENSER LOCK to prevent water from dispensing when cleaning, refer 'Dipenser lock' section for details.

Clean the pad and external display with a damp, soft lint-free cloth.

Drip tray (Water-dispensing models only)

1

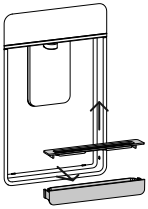

Remove the drip tray from the dispenser panel.

Pull the two halves of the tray apart.

Clean with liquid detergent dissolved in water and a soft lint-free cloth.

Rinse with clean water and dry with a clean, lint-free cloth.

2

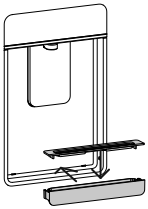

Securely clip the two halves together.

Re-insert the drip tray back into the dispenser panel, rounded sides first.

Toe kick grilles and filter

Your refrigerator is fitted with a toe kick grille and filter to protect the internal working components. We recommend cleaning the grille and filter in conjunction with changing your water filter cartridge (every 6 months).

Keep ventilation openings clear of obstructions by regularly vacuuming the flooring in front of your appliance to maximize the operating efficiency of your appliance.

Clean your appliance regularly especially for houses that are dusty or houses with pets that shed hair.

RS80 and RS90 models only

1

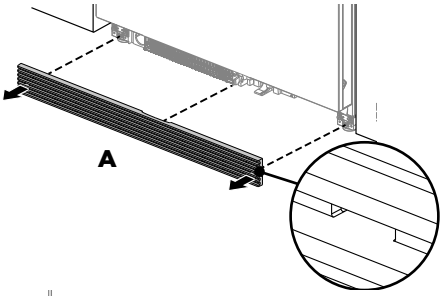

To clean the toe kick grille and filter

Remove the toe kick grille by inserting fingers into the left and right square openings on the grille. Pull towards you (**A**).

2

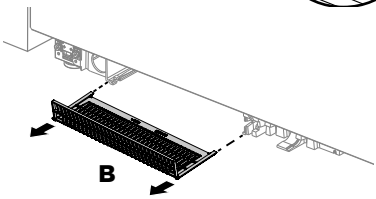

To remove toe kick filter, insert fingers into the left and right square openings on the filter. Pull towards you (**B**).

Clean both components with liquid dishwashing detergent dissolved in warm water and a soft lint-free cloth.

Rinse with clean water and dry with a clean, lint-free cloth.

3

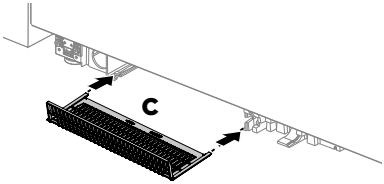

To replace toe kick filter and grille

To replace toe kick filter, align filter tabs onto the rails and push to the rear until it clips securely (**C**).

4

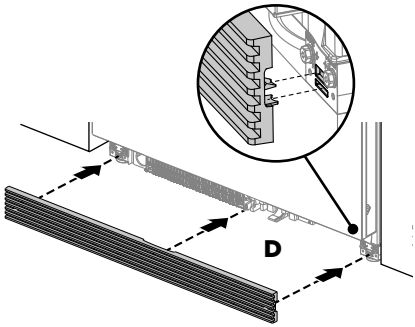

To replace toe kick grille, ensure spacers on the inside of the toe kick are positioned correctly. Align securing hooks then firmly push grille onto product until it clips securely (**D**).

RS9120W models only

1

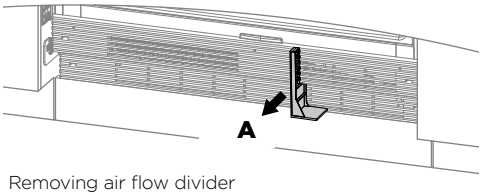

Removing air flow divider

To clean the toe kick grille and filter:

Remove the air flow divider by pulling towards you (**A**).

2

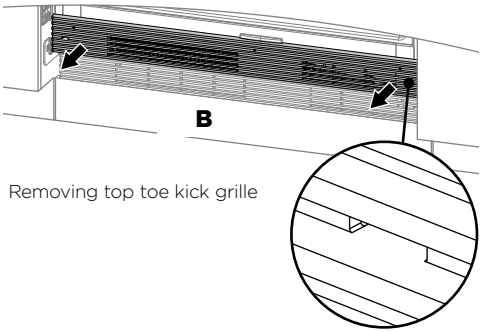

Removing top toe kick grille

To remove the top toe kick grille, insert fingers into the left and right square openings on the grille. Pull towards you (**B**).

3

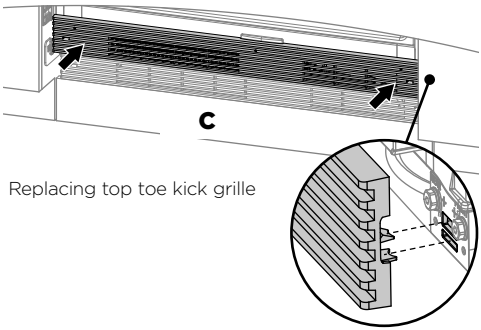

Replacing top toe kick grille

To replace the toe kick grille and filter:

To replace toe kick filter, align filter tabs onto the rails and push to the rear until it clips securely.

To replace top toe kick grille, align securing hooks then firmly push grille onto product until it clips securely (**C**).

4

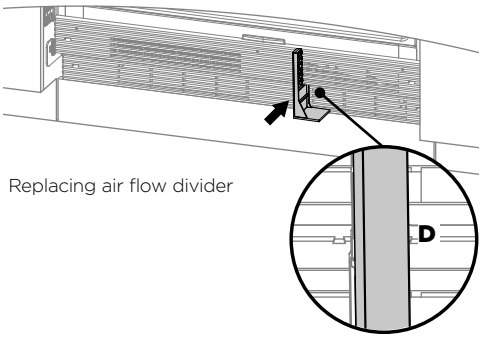

Replacing air flow divider

To replace air flow divider, align the divider underneath the grille tabs indicator and clip onto the vanes of the bottom grille (**D**)

Interior

- It is important to keep the interior of the refrigerator clean to help prevent food from becoming contaminated during storage.
- The amount and types of food stored determines how often cleaning should be carried out in the refrigerator (ideally once every 1–2 weeks).
- For ease of cleaning, empty the refrigerator first and remove all glass shelves, door shelves and storage bins.
- Do not use harsh chemicals, abrasives, ammonia, chlorine, bleach, concentrated detergents, solvents or abrasive scouring pads on any part of your appliance. Some of these chemicals may damage your appliance.
- Clean all surfaces with a mild liquid detergent dissolved in warm water and a soft cloth. Rinse with clean water and dry with a clean, lint-free cloth.

Cantilever glass shelves
- Clean with liquid detergent dissolved in warm water and a soft lint-free cloth.
- Rinse with clean water and dry with a clean, lint-free cloth.

① To remove glass shelves, hold the front and back edge of the shelf firmly.
② Push the shelf up vertically to dislodge from back support lugs.
③ Pull the shelf towards you.

Single bottle holders
- Clean with liquid detergent dissolved in warm water and a soft lint-free cloth.
- Rinse with clean water and dry with a clean, lint-free cloth.

Humidity control system
- We recommend to use only liquid detergent dissolved in warm water and a soft lint-free cloth when you clean the glass shelf above the fruit and vegetable bins.
- Rinse with clean water and dry with a clean, lint-free cloth.
- You don't need to disassemble the parts when cleaning the humidity control lid that is attached to the underside of the glass shelf.
- Clean the lid by simply wiping the grooves with a damp, lint free cloth.

Fruit and vegetable bins and slim bin

When cleaning, use only liquid detergent dissolved in warm water and a soft lint-free cloth. Rinse with clean water and dry with a clean, lint-free cloth.

① To remove a bin, extend the bin on its runners, and make sure you empty the bin.
② Hold both sides of the bin corners and push the bin firmly upwards to dislodge from the securing tabs.
③ Pull the bin towards you to remove. Push both runners back into the refrigerator.
④ To return the bin, extend the runners and place the bin on top of the runners.
⑤ Push the bin slowly onto of the runners until you feel it clip onto the runners. Ensure the bin tabs are clipped securely onto the runners before use.

IMPORTANT!

The runners are pre-lubricated to help opening and closing the bins.
They do not need to be lubricated again. Do not remove the grease from the runners to maintain smooth function. Do not immerse the runners in water.

Freezer bins and freezer tray

Removing the freezer bins and tray when cleaning is not necessary. Simply wipe clean with a soft lint-free cloth.

Ice storage bin

- We recommend that you regularly clean your ice bin and discard any old ice in the bottom of the bin(s) regularly. Cleaning the ice maker components is not necessary.
- Use only liquid detergent dissolved in warm water and a soft lint free cloth when cleaning. Rinse with clean water and dry with a clean, lint-free cloth.
- Ensure that the ice scoop is always placed in front of the bin.
- We recommend that you turn off the ice maker before you leave for a vacation/holiday. Refer to 'Ice making' section.
- On your return, turn on the automatic ice maker and discard the first full bin of ice. Refer to 'Automatic ice maker' section.

Holiday/Vacation

Leave your refrigerator operating while you are on holiday/vacation.

For Ice & Water models

- Turn the ice maker off on the control panel.
- Shut off the water supply to the refrigerator.
- On your return, turn on the water supply to the refrigerator.
- Dispense 1 gal (4L) of water and discard to ensure the water tank is refilled with fresh water.
- Turn on the ice maker.
- Discard the first full bin of ice.

FOOD CARE

For best food care

- Store only high-quality, fresh food in your appliance.
- Store perishable foods in the appliance immediately after purchase. Storing at room temperature increases the rate of deterioration and can allow harmful microbial growth.
- Foods such as meat, poultry and seafood should be well wrapped or sealed in suitable packaging to prevent dehydration, color deterioration, loss of flavor, and transfer of odor.
    - We recommend storing these foods on the bottom shelf of your appliance or in one of the bins to prevent potential spills and cross-contamination with other foods.
- Ensure hot foods and beverages are cooled sufficiently before placing them into the appliance. Hot items may cause other foods to warm to unsafe temperatures. It may also cause sealed items to sweat/condensate — which is undesirable.
- Beverages are best stored standing upright in the door shelves or on the bottle racks provided.
- Ensure raw and cooked foods are stored separately to avoid cross-contamination.
- Consume food items within the recommended storage times. Discard foods that show sign of spoilage.
- Keep door openings to a minimum to maintain optimum storage temperatures inside your appliance.
- We recommend using 'Fast Freeze' when you are adding food items to your freezer, such as after grocery shopping. This feature will ensure the food is frozen within the shortest period of time, locking in the freshness and extending the shelf life of your food.
- Storing at temperatures other than settings recommended may impact the storage life.

Items stored in your refrigerator

- Dairy items such as butter and cheeses should be stored in the covered door shelf to minimize any transfer of odor or odor absorption from other foods.
- Eggs should be stored in their carton to avoid absorption of strong odors through their porous shell structure.

Items stored in your freezer

- We recommend cooling carbonated beverages in your freezer only when the 'Bottle Chill' function is active.
    - Do not store carbonated drinks without activating this function. Beverages stored for long periods of time can lead to freezing liquid and the possibility of bottle/can explosion.
- Ensure air is removed from packaging to avoid large formation of ice crystals and prevent freezer burn.
- To maintain freshness and quality, we recommend defrosting foods in the refrigerator. These foods should not be in contact with fresh foods. Ensure partially or fully defrosted foods are never re-frozen – cook immediately.

Faults

- Count the number of beeps made when the refrigerator compartment door is opened.
- Record the number and sequence of temperature lights displayed on the internal control panel and contact a Fisher & Paykel trained and supported service technician in order to repair the fault. You can do this by going online to fisherpaykel.com or by contacting our Customer Care Centre.
- To silence the fault alarm press any button on the **internal** control panel.

Normal refrigerator sounds

ActiveSmart™ refrigerators are designed to have excellent energy ratings and cooling performance. As a result, you may hear sounds somewhat different to your old refrigerator.

Normal operational sounds include:

- **Fan air flow sound.** ActiveSmart™ refrigerators have fans which change speed depending on demand. During cooling periods, such as after frequent door openings, fans circulate the cold air in the refrigerator and freezer compartments producing some air flow sound. This is quite normal.
- **Cracking or popping sounds.** This may occur when the automatic defrost function is operating.
- **Running water sound.** This is the liquid refrigerant in the system and can be heard as a boiling or gurgling noise.
- **An audible hissing sound after closing the freezer door.** This is due to the pressure difference between the warm air that has entered the cabinet and suddenly cooled, and the outside ai**r pressure.**
- **Humming sounds.** This is the compressor running and is quite normal.
- **Gasket noises.** Normally occur over time due to a build up of dirt and/or grime. See 'Cleaning and care' section.
- **Ice maker and water dispenser sounds:**
    - Motor operation (low humming).
    - Running water as the ice maker and/or water tank fills.
    - Water valve opening and closing (hissing sound).
    - Loosened from the ice molding tray (cracking).
    - ce dropping into bin (clunking).
- **Other sounds may be heard for the following reasons:**
    - Cabinet not level
    - Floor uneven or weak
    - Bottles or jars rattling on shelves

TROUBLESHOOTING

If there is a problem with your appliance, check the following points before contacting your local Fisher & Paykel trained and supported service technician or the Customer Care Centre.

Product parts and accessories can be purchased through Fisher & Paykel Customer Care Centre or online at fisherpaykel.com (this service is available to selected markets only).

All models

PROBLEM	POSSIBLE CAUSES	WHAT TO DO
Appliance does not operate	No electricity at power outlet.	Check that the plug is correctly connected and power switched on.
		Check another appliance at the same outlet.
		Check house fuse.
Light not working	Light not functioning.	The light cannot be serviced by the user. Contact your Fisher & Paykel trained and supported service technician.
	Refrigerator not working.	Check refrigerator is turned on at the wall or at the isolating switch.
Motor operates for long periods	Hot weather.	Minimize door openings to allow temperature to stabilize.
	Frequent door openings.	
	Large amount of food recently added.	
	Temperature control set too low.	See ‘Using your appliance’ section.
	Doors not sealing properly.	Check that cabinet is level and gasket seals are clean. See ‘Cleaning and Care’ section.
Storage compartments too warm	Temperature setting not correct.	See ‘Temperature control’ section.
	Frequent door openings.	Minimize door openings to allow temperature to stabilize.
	Large amount of food recently added.	
Food freezing in the fridge compartment	Temperature setting not correct.	See ‘Temperature control’ section.
	Food placed directly in front of air outlets.	Move chill sensitive foods away from the center back of the shelves.
Unfamiliar noises	Cabinet not stable or level.	See ‘Installation Guide’ booklet.
	Freezer is defrosting.	This is normal.

All models

PROBLEM	POSSIBLE CAUSES	WHAT TO DO
Fault alarm sounds when the refrigerator compartment door is opened		Record the number of beeps along with the number and sequence of temperature lights displayed on the **internal** control panel. Contact Customer Care Center.
Water in the vegetable bins	Condensation is formed by the water produced by fruit and vegetables.	A small amount of condensation is beneficial for fruit and vegetable storage.
		Wipe out water with a cloth.
Exterior of cabinet is warm	This is normal.	
Condensation on outside of refrigerator/ freezer	Not unusual during periods of high humidity.	Wipe dry.
Condensation inside fridge compartment	Frequent or long door openings.	Minimize door openings.
	Door gasket leaking.	Check that gasket is sitting flat and sealing tightly.
	Not unusual during periods of high humidity.	Wipe dry.
Tray/bin does not slide in and out evenly	Packaging trapped.	Check to ensure no food or packaging is trapped behind the tray/bin.
Ice cubes taste tainted	Unsealed packages may be transmitting odor/taste.	Discard ice cubes and clean ice storage bin. See ‘Cleaning and care’ section.
		Wrap or cover strong smelling foods.
Excessive gasket noise	May be due to a build up of dirt and/or grime.	See ‘Cleaning and care’ section.
Door not closing	An obstruction is blocking door closing.	Move obstruction.

Ice & Water models only

PROBLEM	POSSIBLE CAUSES	WHAT TO DO
Automatic ice maker does not work	Ice maker has not been turned on.	Switch on ice maker, see 'Ice making' section.
	Water supply turned off or not connected.	Connect water supply.
	Freezer compartment not working.	Contact Customer Care Center.
	Water pressure too low.	Check water pressure.
	Water line kinked/squashed.	Check water line for kinks/squashing.
	Filter clogged.	Water filter may need replacing.
	Ice cubes stick in ice bin.	Remove ice bin, loosen cubes and remove clumped ice. Refit ice box.
Ice cubes taste tainted	Unsealed packages may be transmitting odor/taste.	Discard ice cubes and clean ice storage bin. See 'Cleaning and care' section.
		Wrap or cover strong smelling foods.
	Poor taste from incoming water.	Replacement filter cartridges can be purchased online from fisherpaykel.com or by calling Fisher & Paykel Customer Care.
Slow ice cube freezing	Door may have been left ajar.	Close door.
	Freezer compartment set too warm.	Turn temperature to a colder setting. (See 'Temperature control' section).
Small cubes	Low water pressure.	Check water pressure.
	Filter blocked.	Replace filter cartridge. Replacement filter cartridges can be purchased online from fisherpaykel.com or by calling Fisher & Paykel Customer Care. Instructions on how to install your replacement water filter are provided with the filter.
Wet ice/ ice clumping	Long freezer door openings.	Gently tap ice to unstick or, if large clumps occur, empty ice bin and make new ice.
	High ambient temperature.	
	Ice bin left out of freezer compartment for a length of time.	
	Ice will stick together over time.	

Ice & Water models only

PROBLEM	POSSIBLE CAUSES	WHAT TO DO
Water has poor taste/odor	Refrigerator not used for an extended period.	Flush the water filtration system. Dispense and discard 1 gal (4L) of water, this will ensure the water tank is refilled with fresh water.
Poor incoming water quality	Refrigerator not used for an extended period.	Flush the water filtration system. Dispense and discard 1 gal (4L) of water, this will ensure the water tank is refilled with fresh water.
Water dispenser does not work	Water supply turned off or not connected.	Turn water on.
	Supply line may be blocked.	Check incoming connection for kinks or leaks.
	On first installation there may be air in water system.	To remove air, run 1 gal (4L) of water through the dispenser.
	Filter may be blocked and needs replacing.	Replace filter cartridge. Replacement filter cartridges can be purchased online from fisherpaykel.com or by calling Fisher & Paykel Customer Care.
	Water frozen in tank.	Increase temperature to a warmer setting in refrigerator compartment and freezer.
Water in first glass is warm	Water dispenser not used for extended period.	Discard first glass of water dispensed.
	Tank capacity used recently.	Allow water time to cool.
Drips overflow drip tray	Air trapped in tank.	Flush the water filtration system.
	New filter installed.	Dispense and discard 1 gal (4L) of water, then rest the dispenser pad for a further 2 minutes. Dispense and discard a further 1 gal (4L) of water. This will displace trapped air in the water tank and filter system.
Water flow rate has slowed down	Filter cartridge is restricted. Check if filter icon is illuminating.	Replace filter cartridge. Replacement filter cartridges can be purchased online from fisherpaykel.com or by calling Fisher & Paykel Customer Care.
	Kinked water supply line.	
Ice buildup inside freezer compartment	Freezer door not closing tightly.	Arrange items in freezer so door can close tightly. Check and clean door gasket seal.
Ice maker sounds	Normal ice maker operation.	See ‘User warnings and sounds’ section.
Small or large ice cubes	Insufficient or excessive water pressure.	Check water pressure.

SERVICE & WARRANTY

For details of your Manufacturer's Warranty and contacts for servicing, please refer to your separate 'Service & Warranty' book provided with your refrigerator.

This product has been designed for use in a normal domestic (residential environment). This product is not designed for any commercial use. Any commercial use by the customer will affect this products Manufacturer's Warranty.

For spare parts, please contact Fisher & Paykel Customer Care. Spare parts are available for all Fisher & Paykel refrigerators for a minimum period of 10 years from the date of manufacture.

Complete and keep for safe reference:

Model _____

Serial No. _____

Purchase Date _____

Purchaser _____

Dealer _____

Suburb _____

Town _____

Country _____

EUROPEAN DIRECTIVE 2012/19/EU ON WASTE ELECTRICAL AND ELECTRONIC EQUIPMENT (WEEE)

EU This appliance is marked according to the European Directive 2012/19/EU on Waste Electrical and Electronic Equipment (WEEE). By ensuring this product is disposed of correctly, you will help prevent potential negative consequences for the environment and human health, which could otherwise be caused by inappropriate handling of this product.

The symbol  marked on the serial plate, or on the documents accompanying the product, indicates that this appliance cannot be treated as household waste. It shall be handed over to the applicable collection point for the recycling of electrical and electronic equipment. Disposal of the appliance shall be carried out in accordance with the local environment regulations for waste disposal and ensure the refrigerant circuit is not damaged.

For more detailed information about treatment, recovery and recycling of this product, please contact your local city office, your household waste disposal service or your Fisher & Paykel retailer/dealer from whom you purchased this product.

FISHERPAYKEL.COM

© Fisher & Paykel Appliances 2021. All rights reserved.

The models shown in this guide may not be available in all markets and are subject to change at any time.

The product specifications in this guide apply to the specific products and models described at the date of issue. Under our policy of continuous product improvement, these specifications may change at any time.

For current details about model and specification availability in your country, please go to our website or contact your local Fisher & Paykel dealer.

863939C 06.21